Drying Tumblers

50 and 75 Pound Capacity

Refer to Page 5 for Model Numbers

Parts

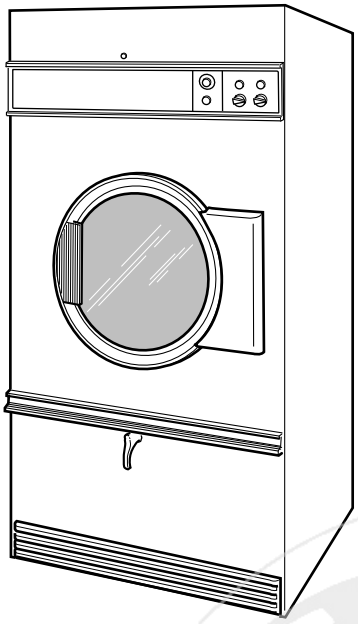

T012C_70410801

info@zipnasklade.ru
8(800)500-69-51

Alliance Laundry Systems

www.alliancelaundry.com

Part No. 70410801R8
October 2013

info@zipnasklade.ru
8(800)500-69-51

Table of Contents

Title	Page
Parts Ordering Information	3
Nameplate Location	3
Model Identification	5
Control Panel Assembly for Rotary Coin Drop Models	6
Control Panel Components for A, DT, JT and ST Manual Timer Models	8
Control Panel Assemblies for A, DT, JT and ST Manual Timer Models	10
Control Panel Assembly for DC, JC and SC Manual Timer Models	12
Coin Meter	14
OPL 120 Volt Micro Control	16
OPL 24 Volt Micro Control	18
Network Board for NetMaster Models	20
Card Reader for NetMaster Models	22
Coin Drop for NetMaster Models	24
Network Interface Board for NetMaster Models	26
Front Control Box Components	28
Coin Vault and Coin Drawer	30
Access Panel and Top Cover	32
Front Panel and Door	34
Door Switch	36
Panels, Lint Hood Assembly and Lint Screen	38
Cylinder and Trunnion Assemblies	40
Trunnion Housing and Sprockets	42
Idler Drive Components for Nonreversing Belt/Chain Drive	44
Idler Drive Components for Nonreversing Belt/Belt Drive	46
Idler Housing Assembly For Nonreversing Belt/Belt Drive	48
Idler Drive Components For Belt/Chain Drive - Reversing Models	50
Idler Drive Components For Belt/Belt Drive - Reversing Models	52
Idler Housing Assembly for Reversing Belt/Belt Drive	54
Fan and Motor Components - All Models Except FG and 634	56
Fan Motors with Standard Connection - 50 Pound Models Through Serial No. 684487YA	58
Fan Motors with Quick Connect - 50 Pound Models Starting Serial No. 684487YA	60
Motor Components - 75 Pound Models Except FG and 634	62
Fan and Motor Components - FG and 634 Models	64
Cylinder Drive Motor and Components for Models Through 1996	66
Cylinder Drive Motor and Components for Models Starting 1996	68
Cylinder Motor Bracket - Models Through 1995	70
Airflow Switch Assembly	72
Standing Pilot Ignition Burner Assembly - 50 Pound Models	74
Standing Pilot Ignition Gas Valve Components	76
Automatic Pilot Ignition Burner Assembly - 50 Pound Models	78
Glow Bar Ignition Burner Assembly - 50 Pound Models Starting Jan 1982 (PA) Through Aug 1982 (PH)	80

© Copyright 2013, Alliance Laundry Systems LLC

All rights reserved. No part of the contents of this book may be reproduced or transmitted in any form or by any means without the expressed written consent of the publisher.

info@zippaskladе.ru

8(800)500-69-51

Glow Bar Ignition Gas Valve Components - 50 Pound Models 82
Glow Bar Ignition Burner Assembly 84
Glow Bar Ignition Gas Valve Coil and Wires 86
Instant Electronic Ignition Burner Assembly 88
Gas Burner Components for Electronic Ignition 90
Instant Electronic Ignition Gas Valve Coil and Wires 92
Burner Assembly for Australian Models 94
Gas Valve Assembly for Dungs/B-M System 96
Gas System 98
Burner Orifices - A, DT, JT, ST and TKD Models 100
Electric Heater Components and Thermostat (Drawing 1 of 3) 102
Electric Heater Components and Thermostat (Drawing 2 of 3) 104
Electric Heater Components and Thermostat (Drawing 3 of 3) 106
Electric Heat Contactor Box Components 108
Steam Heater and Valve 110
Cabinet High Limit Thermostat and Backdraft Damper 112
Warning Labels 114
Reversing Control 116
Contactor Box Assembly Harnesses for OM Control Suffix 118
Contactor Box Assembly (Drawing 1 of 10) 120
Contactor Box Assembly (Drawing 2 of 10) 122
Contactor Box Assembly (Drawing 3 of 10) 124
Contactor Box Assembly (Drawing 4 of 10) 126
Contactor Box Assembly (Drawing 5 of 10) 128
Contactor Box Assembly Harnesses for CD, MM and MT Control Suffixes 130
Contactor Box Assembly (Drawing 6 of 10) 132
Contactor Box Assembly (Drawing 7 of 10) 134
Contactor Box Assembly (Drawing 8 of 10) 136
Contactor Box Assembly (Drawing 9 of 10) 138
Contactor Box Assembly (Drawing 10 of 10) 140
Accessory Box 142
Junction Box 144
Parts Index 147

info@zipnasklade.ru
8(800)500-69-51

© Copyright, Alliance Laundry Systems LLC – DO NOT COPY or TRANSMIT

Parts Ordering Information

If literature or replacement parts are required, contact the source from whom the machine was purchased or contact Alliance Laundry Systems at (920) 748-3950 for the name and address of the nearest authorized parts distributor.

For technical assistance, call either of the numbers listed below:

(920) 748-3121 Ripon, Wisconsin

+32 56 41 20 54 Wevelgem, Belgium

Nameplate Location

When calling or writing about your product, be sure to mention model and serial numbers. Model and serial numbers are located on nameplate(s) as shown.

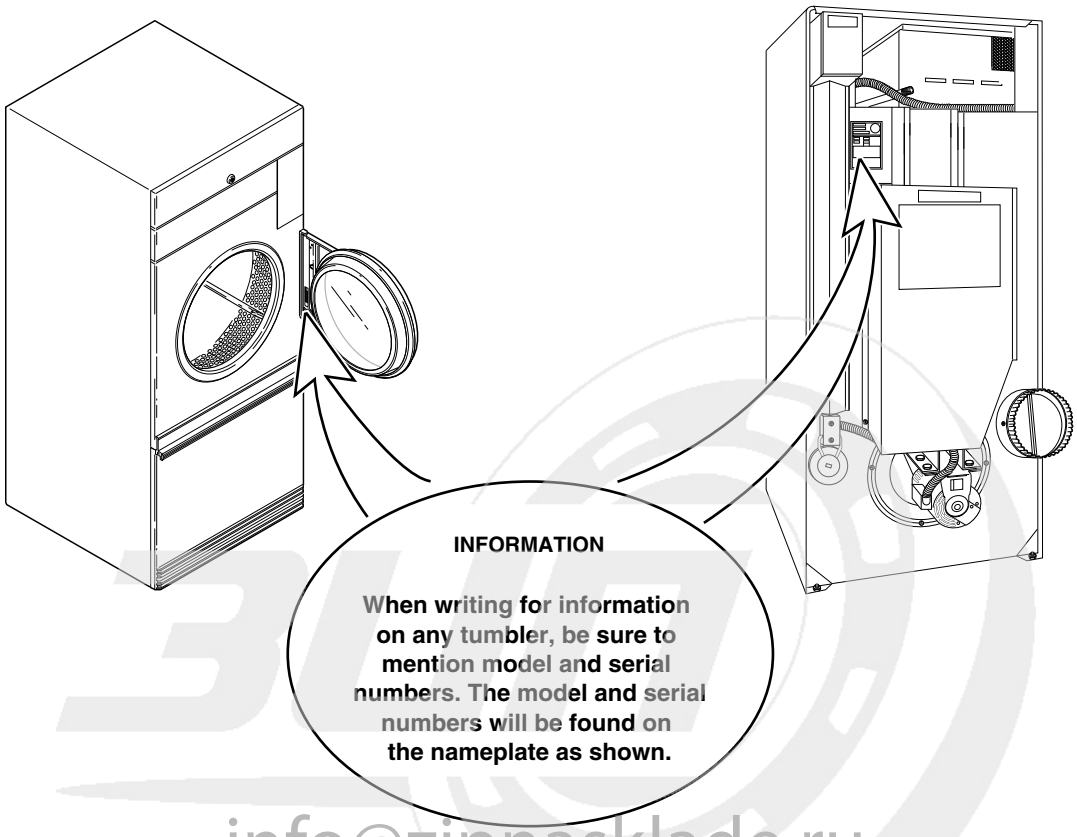

T419IE3A_70410801

info@zipnasklade.ru
8(800)500-69-51

© Copyright, Alliance Laundry Systems LLC – DO NOT COPY or TRANSMIT

Notes

info@zipnasklade.ru
8(800)500-69-51

© Copyright, Alliance Laundry Systems LLC – DO NOT COPY or TRANSMIT

Model Identification

Information in this manual is applicable to these tumbler models:

ATB50CG
ATB50CSH
ATB75CG
ATB75CSH
DCB50CE
DCB50CG
DCB50CSH
DCB50EG
DCB75CE
DCB75CG
DCB75CSH
DCB75CSL
DCB75FG
DTB50CE
DTB50CG
DTB50CSH
DTB50CSL
DTB50EG
DTB634
DTB75CE
DTB75CG
DTB75CSH
DTB75CSL
DTB75EG
DTB75FG

JC50CE
JC50CG
JC50CSH
JC50EG
JC75CE
JC75CG
JC75CSH
JC75EG
JCB50CE
JCB50CG
JCB50CSH
JCB50EG
JCB75CE
JCB75CG
JCB75CSH
JCB75CSL
JT37CE
JT37CG
JT37CGI
JT37CSH
JT37CSL
JT37EG
JT37EGI

JT50CE
JT50CG
JT50CGI
JT50CSH
JT50CSL
JT50EG
JT50EGI
JT75CE
JT75CG
JT75CSH
JT75CSL
JT75EG
JTB50CE
JTB50CG
JTB50CSH
JTB50CSL
JTB50EG
JTB75CE
JTB75CG
JTB75CSH
JTB75CSL
JTB75EG

SC50CE
SC50CG
SC50CSH
SC50EG
SC75CE
SC75CG
SC75CSH
SC75EG
SCB50AT
SCB50CE
SCB50CG
SCB50CSH
SCB50EG
SCB75CE
SCB75CG
SCB75CSH
SCB75CSL
ST37CE
ST37CG
ST37CGI
ST37CSH
ST37CSL
ST37EG
ST37EGI

ST50CGI
ST50CSH
ST50EGI
ST75CE
ST75CG
ST75CSH
ST75CSL
STB50CE
STB50CG
STB50CSH
STB50CSL
STB50EG
STB634
STB75CE
STB75CG
STB75CSH
STB75CSL
STB75EG
TKD50CEMT
TKD50CGMT

Control Suffixes:

CD – rotary coin drop
MM – OPL micro
MT – manual timer
NC – NetMaster coin
NR – NetMaster card
NX – NetMaster, prep for coin
NY – NetMaster, prep for card
OM – OPL micro
ZC – NetMaster network, coin
ZR – NetMaster network, card
ZX – NetMaster network, prep for coin
ZY – NetMaster network, prep for card

info@zipnasklade.ru
8(800)500-69-51

© Copyright, Alliance Laundry Systems LLC – DO NOT COPY or TRANSMIT

Control Panel Assembly for Rotary Coin Drop Models

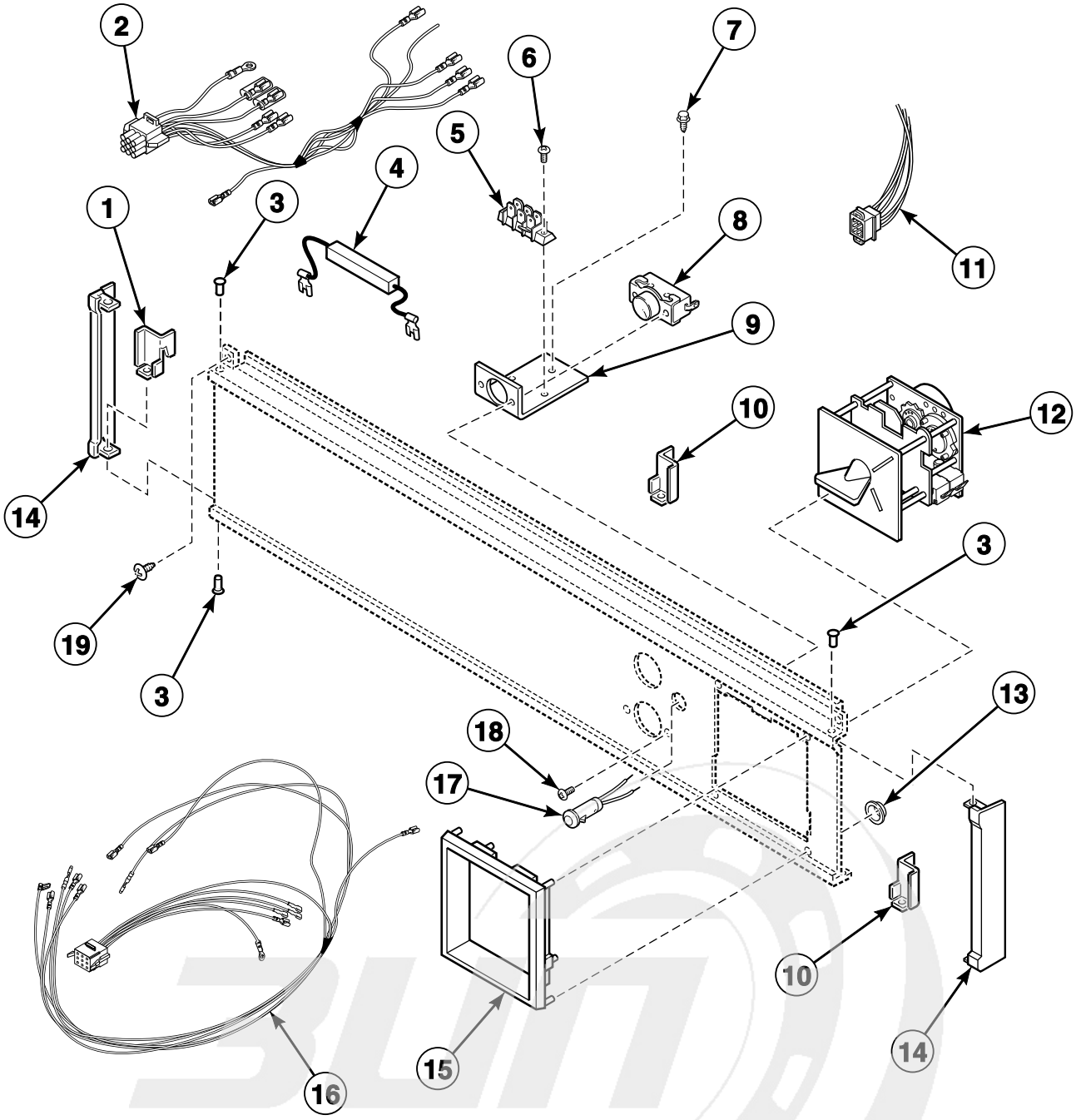

info@zipnasklade.ru
8(800)500-69-51

© Copyright, Alliance Laundry Systems LLC – DO NOT COPY or TRANSMIT

Control Panel Assembly for Rotary Coin Drop Models

REF	PART NO.	DESCRIPTION	COMMENTS
1	M401301	Control Panel Retainer	Left
2	M405871P	Control Harness	CG and EG models; Coin; Front control box to rear junction box
3	M405750	Pop Rivet	
4	M400527	Resistor Assembly	For 208-240 Volt/60 Hertz Greenwald timers
5	N/A	Terminal Block	
6	M400071	Screw	
7	M402917	Screw	Ground
8	44106901P	Push-to-Start Switch Kit	
9	N/A	Bracket	
10	M401302	Control Panel Retainer	Right
11	M403924P	Control Panel Wire Harness Assembly	
12	M402508-12	Coin Meter	South Africa; .20/10 minutes
	M402508-14	Coin Meter	Japan; 100 yen/10 minutes
	N/A	Coin Meter	Australia; .20/5 minutes
	N/A	Coin Meter	France; 2 franc/10
	N/A	Coin Meter	South Africa; .50/15 minutes
	N/A	Coin Meter	Token; STD 118-5/10
	N/A	Coin Meter	Token; STD 118-5
	M402508-34	Coin Meter	Danish; Krone/5 minutes
	M402508-36	Coin Meter	Token; STD 118-1
	N/A	Coin Meter	Australia; $1/15 minutes
	N/A	Coin Meter	Token; STD 118-1/15
	M405138P	Coin Meter	USA; $.25/10 minutes; 120 Volt/60 Hertz
	M412546	Coin Meter	Token; STD118-1
	N/A	Coin Meter	Token; STD118-5
	N/A	Coin Meter	England; 20 pence
	M402508-45	Coin Meter	Spain; 25 pesetas
13	M400672	Nut	50 pound models
	M400675	Washer	75 pound models
14	N/A	End Cap	
15	N/A	Shadow Box	
16	N/A	Wire Harness Assembly	50 pound DC, JC and SC models; Front control box to rear junction box
17	M404151	Run Light	120 Volt control circuit
	N/A	Run Light	208-240 Volt control circuit
18	M400072	Screw	
19	33562	Screw	

N/A = Part no longer available

info@zipnasklade.ru
8(800)500-69-51

© Copyright, Alliance Laundry Systems LLC – DO NOT COPY or TRANSMIT

Control Panel Components for A, DT, JT and ST Manual Timer Models

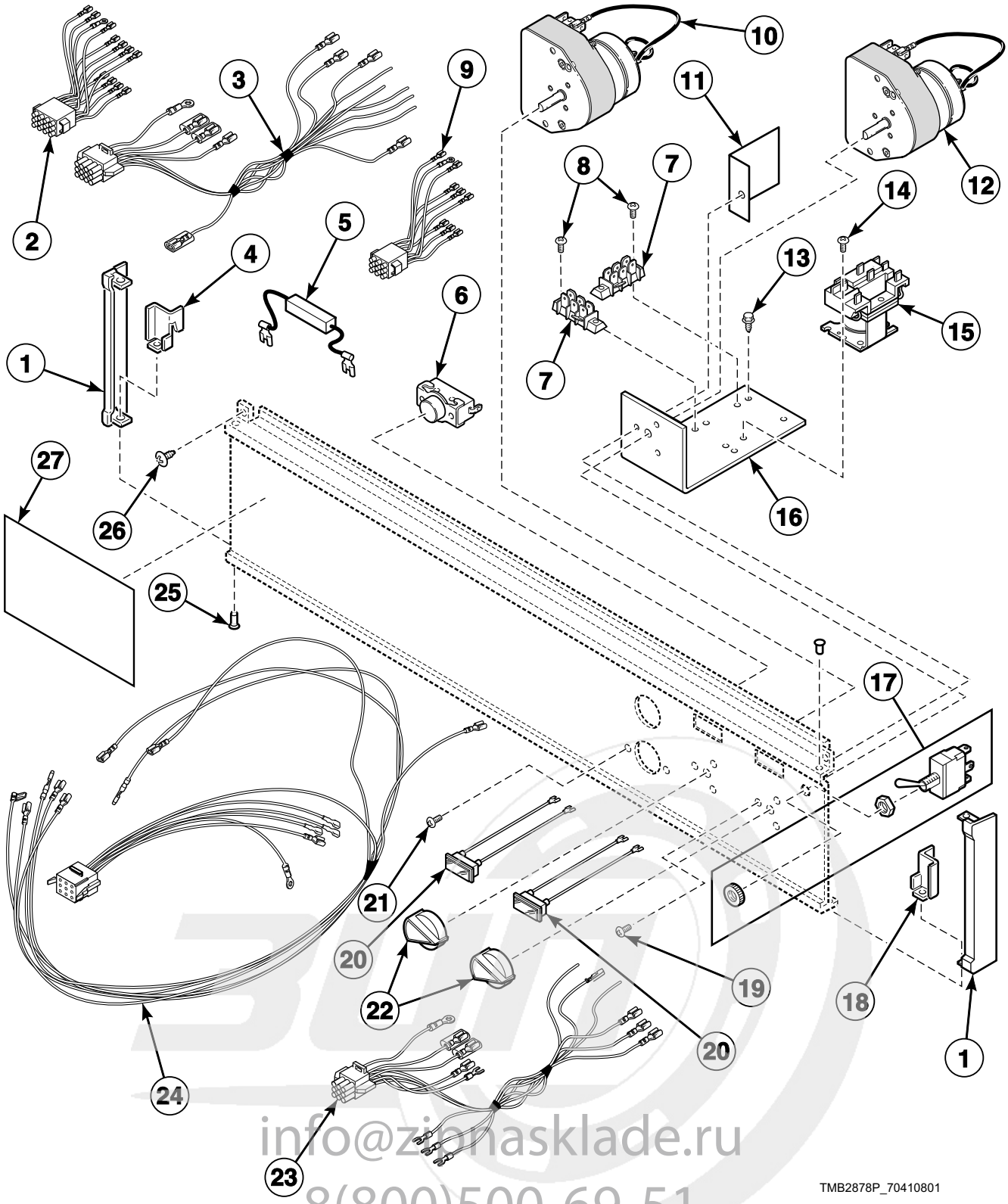

info@zionasklade.ru
8(800)500-69-51

© Copyright, Alliance Laundry Systems LLC – DO NOT COPY or TRANSMIT

Control Panel Components for A, DT, JT and ST Manual Timer Models

REF	PART NO.	DESCRIPTION	COMMENTS
1	N/A	End Cap	
2	M410488	Control Panel Wire Harness Assembly	Reversing; Gas models; 208-240 Volt/60 Hertz/3 Phase; Front control box to rear junction box
	M405372	Wire Harness Assembly	Reversing; Gas models; 50 Hertz; Front control box to rear junction box
3	N/A	Control Wire Harness Assembly	Reversing; Gas models; 50 Hertz
	M410487	Control Wire Harness Assembly	Reversing; Gas models; 208-240 Volt/60 Hertz/3 Phase
	N/A	Control Box Wire Harness Assembly	Reversing; Electric and steam models; Front control box to rear junction box
4	M401301	Control Panel Retainer	Left
5	M410992	Resistor Assembly	Robert Shaw Mallory timer; 208-240 Volt/60 Hertz control circuit
	M400527	Resistor Assembly	Greenwald timer; 208-240 Volt
6	44106901P	Push-to-Start Switch Kit	
7	N/A	Terminal Block	208-240 Volt/50 or 60 Hertz
8	M400071	Screw	
9	M403924P	Control Panel Wire Harness Assembly	Nonreversing and coin
10	M410900P	Timer Kit	Cooling; 15 minute; 60 Hertz
	M410902P	Timer Kit	Cooling; 15 minute; 50 Hertz
11	N/A	Fishpaper	
12	M410901P	Timer Kit	Drying; 60 minute; 60 Hertz
	M410903P	Timer Kit	Drying; 60 minute; 50 Hertz
13	M402917	Screw	Ground
14	M400072	Screw	50 pound models
	51780	Screw	75 pound models
15	M400912P	Relay	120 Volt/60 Hertz
	M400911P	Relay	208-240 Volt/50 or 60 Hertz
16	N/A	Electrical Components Tray	
17	M400945	Toggle Switch	Reversing; Includes nuts
	M413270	Rocker Switch	Reversing
18	M401302	Control Panel Retainer	Right
19	M411052	Screw	
20	JST-163-2	Pilot Light	120 Volt/60 Hertz
	N/A	Pilot Light	208-240 Volt/50 or 60 Hertz
21	M400072	Screw	
22	M400773	Knob	A, DT and ST models except 634; Black with silver arrow
	M410927	Knob	JT models; Cocoa with white dot
23	N/A	Wire Harness Assembly	Gas models; 480 Volt/60 Hertz/3 Phase
24	N/A	Wire Harness Assembly	Nonreversing; Electric models; 480 Volt; Front control box to rear junction box
25	M405750	Pop Rivet	
26	33562	Screw	
27	70240801	Nameplate Overlay	A models

N/A = Part no longer available

info@zipnasklade.ru
8(800)500-69-51

© Copyright, Alliance Laundry Systems LLC – DO NOT COPY or TRANSMIT

Control Panel Assemblies for A, DT, JT and ST Manual Timer Models

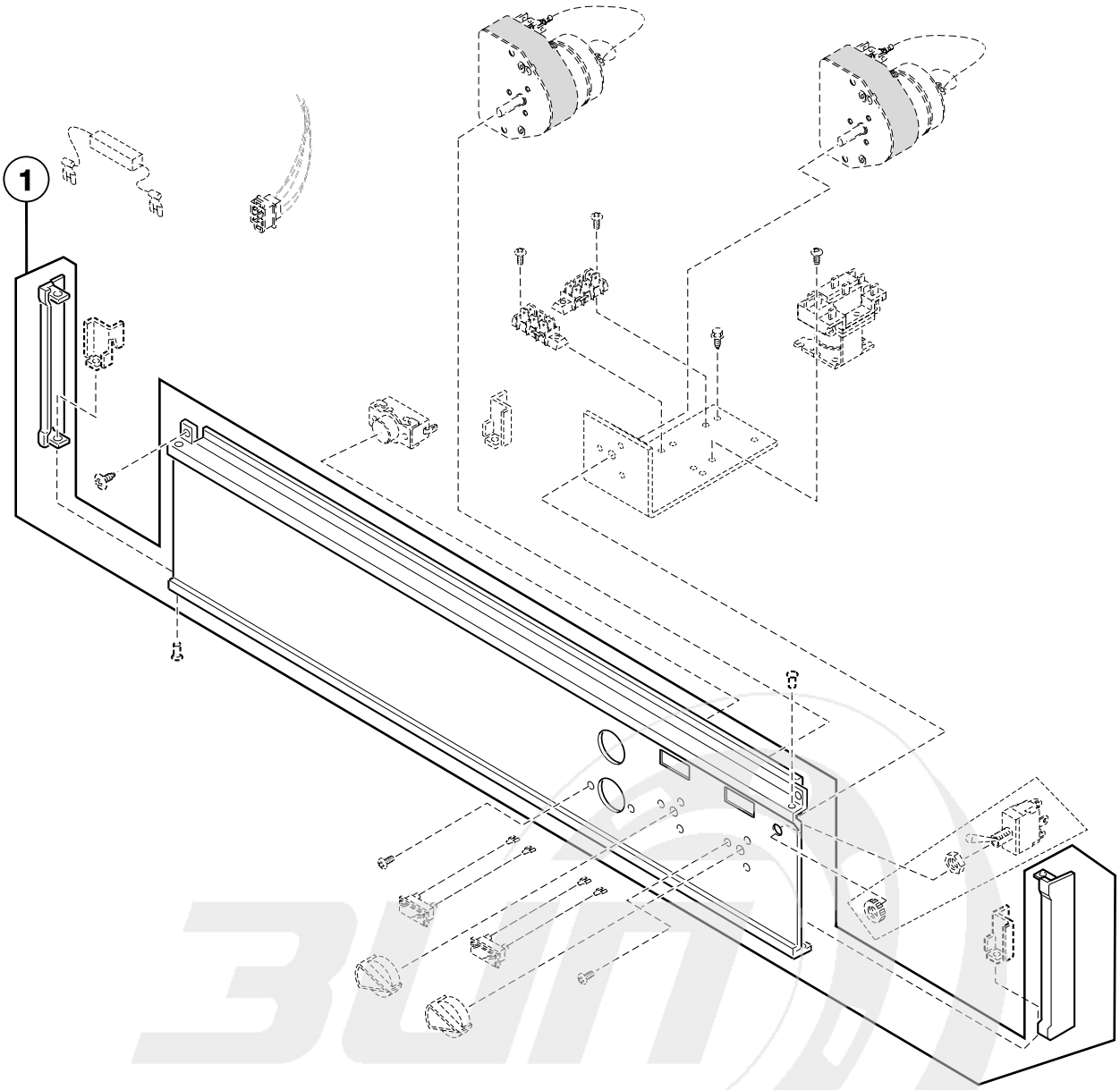

TMB2110P_70410801

info@zipnasklade.ru
8(800)500-69-51

© Copyright, Alliance Laundry Systems LLC – DO NOT COPY or TRANSMIT

Control Panel Assemblies for A, DT, JT and ST Manual Timer Models

REF	PART NO.	DESCRIPTION	COMMENTS
1	N/A	Control Panel Assembly	Nonreversing; JT models; Includes end caps
	M410660	Control Panel Assembly	Reversing; 75 pound JT models; Includes end caps
	M413315	Control Panel Assembly	Nonreversing; DT models; Includes end caps; Black
	M413316	Control Panel Assembly	Reversing; DT models; Includes end caps; Black
	N/A	Control Panel Assembly	Nonreversing; ST models; Includes end caps; Black
	N/A	Control Panel Assembly	Reversing; ST models; Includes end caps
	N/A	Control Panel Assembly	JT models
	N/A	Control Panel Assembly	Nonreversing; ST gas models; Black
	N/A	Control Panel Assembly	Nonreversing; ST electric models; Black
	N/A	Control Panel Assembly	Nonreversing; ST gas and steam models
	N/A	Control Panel Assembly	Nonreversing; ST steam models; Black
	N/A	Control Panel Assembly	Nonreversing; ST electric models; Black
	N/A	Control Panel Assembly	Reversing; ST models
	N/A	Control Panel Assembly	Nonreversing coin models; Includes end caps
	N/A	Control Panel Assembly	JT models; Includes end caps; Aluminum
	N/A	Control Panel Assembly	50 pound JT models; Includes end caps; Cocoa
	N/A	Control Panel Assembly	Reversing; ST models; Includes end caps; Black
	N/A	Control Panel Assembly	Reversing; JT models; Includes end caps; Cocoa
	N/A	Control Panel Assembly	Reversing; JT models; Includes end caps; Aluminum
	N/A	Control Panel Assembly	DT models; Includes end caps; Black; Icon
	M414906	Control Panel Assembly	Dual timer
	M410680	Control Panel Assembly	50 pound JTCG and JTEG models; Includes control; Aluminum

N/A = Part no longer available

info@zipnasklade.ru
8(800)500-69-51

© Copyright, Alliance Laundry Systems LLC – DO NOT COPY or TRANSMIT

Control Panel Assembly for DC, JC and SC Manual Timer Models

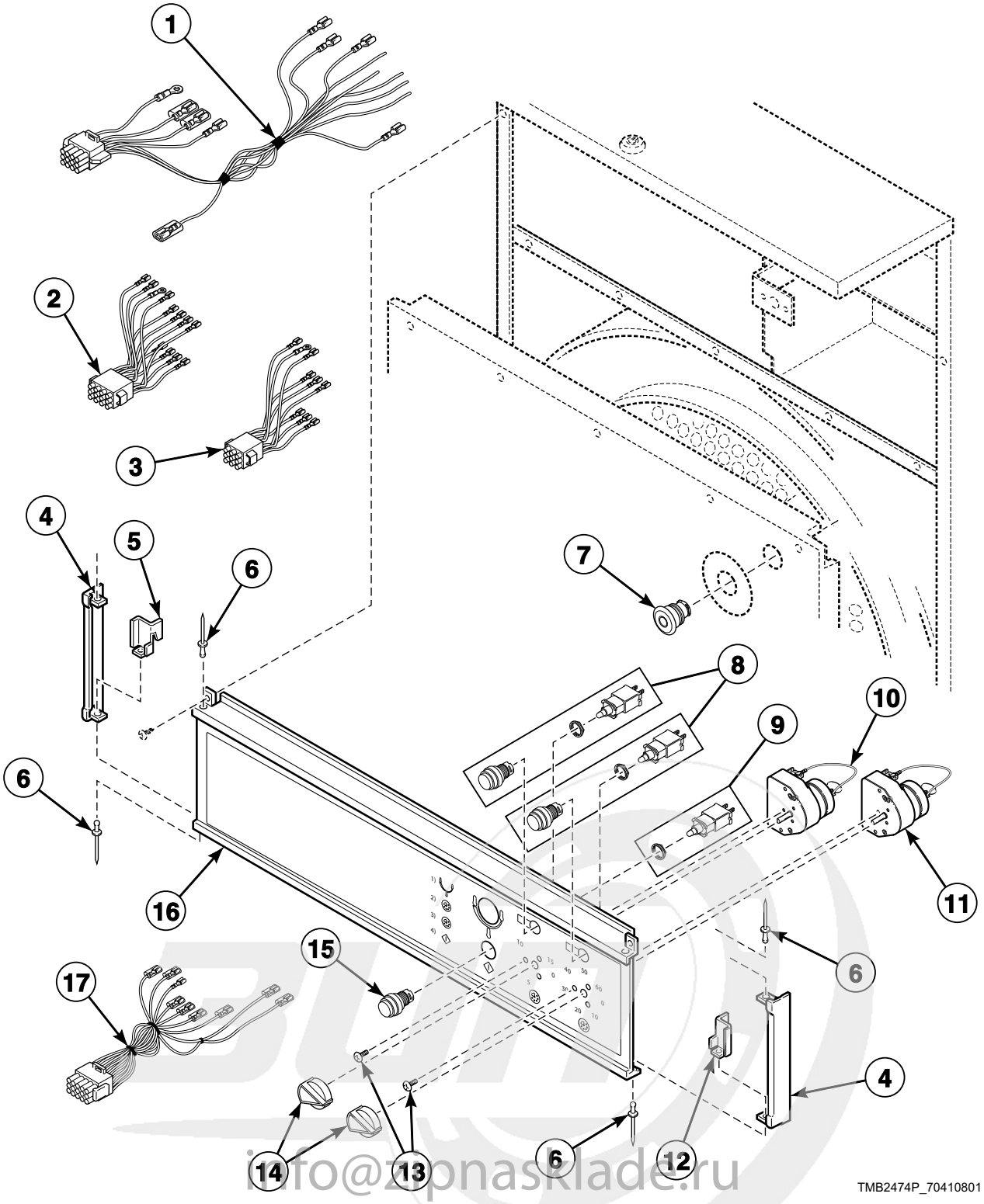

info@zipnasklade.ru
8(800)500-69-51

© Copyright, Alliance Laundry Systems LLC – DO NOT COPY or TRANSMIT

Control Panel Assembly for DC, JC and SC Manual Timer Models

REF	PART NO.	DESCRIPTION	COMMENTS
1	N/A	Control Wire Harness Assembly	Reversing; Gas models; 50 Hertz
	N/A	Control Box Wire Harness Assembly	Reversing; Electric and steam models
	M410487	Control Wire Harness Assembly	Reversing; Gas models; 208-240 Volt/60 Hertz/3 Phase
2	M410488	Control Panel Wire Harness Assembly	Reversing; Gas models; 208-240 Volt/60 Hertz/3 Phase
3	M403924P	Control Panel Wire Harness Assembly	Nonreversing
4	N/A	End Cap	
5	M401301	Control Panel Retainer	Left
6	M405750	Pop Rivet	
7	44018701P	Emergency Stop Kit	
	44018801	Pushbutton	Emergency stop
8	N/A	Indicator Light	
9	M412230	Contact Block	Push-to-start
	44018701	Contact Block	
10	N/A	Timer	Drying; 60 minute; 24 Volt
11	M412079P	Timer	Cooling; 15 minute; 24 Volt
12	M401302	Control Panel Retainer	Right and center
13	M411052	Screw	
14	M400773	Knob	DC and SC models
	M410927	Knob	JC models
15	N/A	Pushbutton	Push-to-start
16	N/A	Control Panel Assembly	SC models; Includes end caps
	M414204	Control Panel Assembly	Reversing; SC models; Includes end caps
	N/A	Control Panel Assembly	JC models; Includes end caps
	N/A	Control Panel Assembly	Reversing; JC models; Includes end caps
	N/A	Control Panel Assembly	Reversing; DC models; Includes end caps
	N/A	Control Panel Assembly	DC models; Includes end caps
17	N/A	Panel Harness Assembly	Reversing

N/A = Part no longer available

info@zipnasklade.ru
8(800)500-69-51

© Copyright, Alliance Laundry Systems LLC – DO NOT COPY or TRANSMIT

Coin Meter

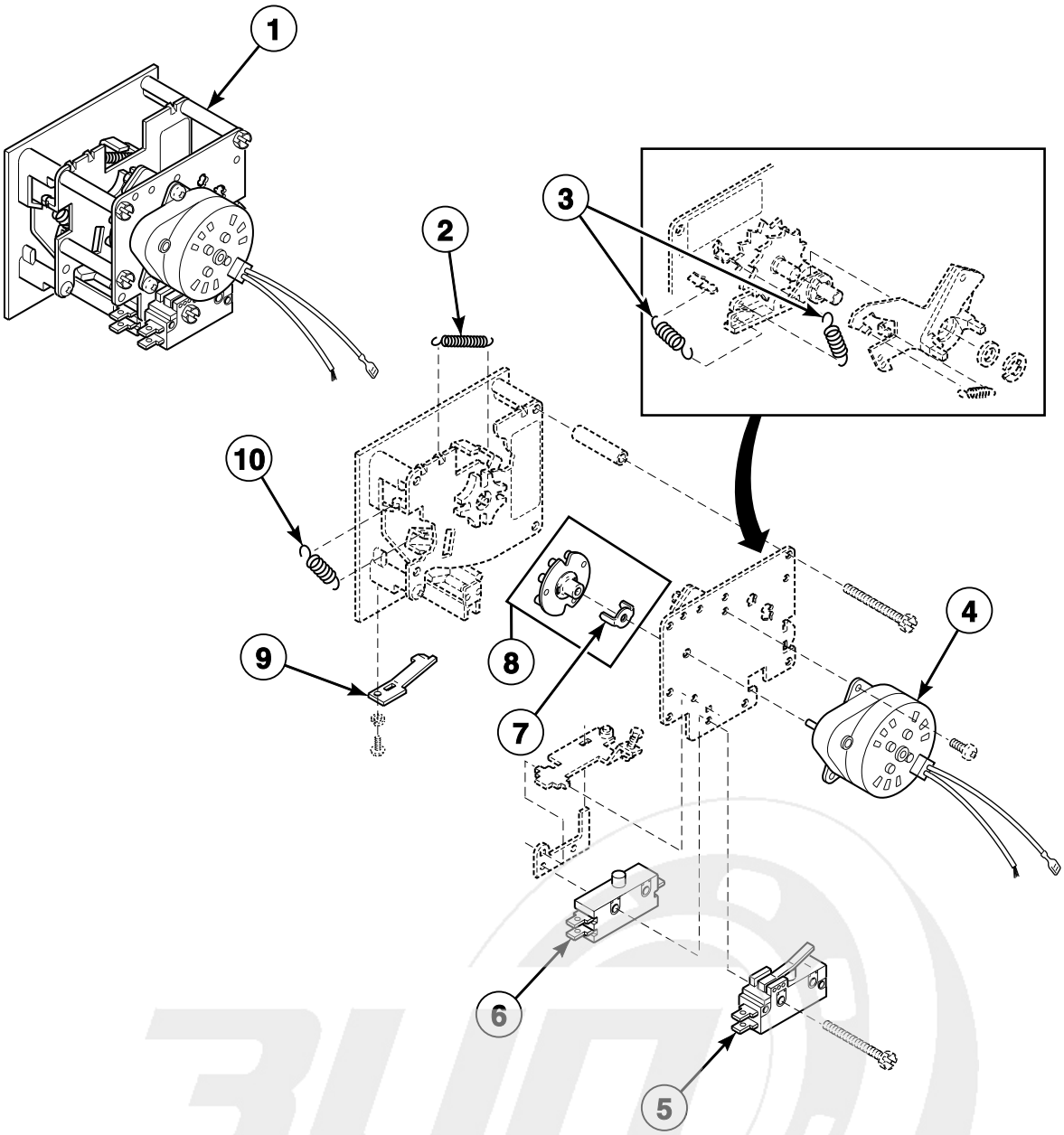

TMB2217P_70410801

info@zipnasklade.ru
8(800)500-69-51

© Copyright, Alliance Laundry Systems LLC – DO NOT COPY or TRANSMIT

Coin Meter

REF	PART NO.	DESCRIPTION	COMMENTS
1	M402508-12	Coin Meter	South Africa; .20/10 minutes
	M402508-14	Coin Meter	Japan; 100 yen/10 minutes; 120 Volt/60 Hertz
	N/A	Coin Meter	Australia; .20/5 minutes
	N/A	Coin Meter	France; 2 franc/10, 2 french francs or 5 french francs
	N/A	Coin Meter	South Africa; .50/15 minutes
	N/A	Coin Meter	Token; STD 118-5
	M402508-34	Coin Meter	Denmark; Krone/5 minutes; Single coin drop is not available
	M402508-36	Coin Meter	50 pound models; Token; STD 118-1
	N/A	Coin Meter	Australia; $1/15 minutes
	M405138P	Coin Meter	USA; $.25/10 minutes; 120 Volt/60 Hertz
	N/A	Coin Meter	75 pound models; Token; STD118-5
	N/A	Coin Meter	75 pound models; Belgium; 5 Belgium francs and 5 francs; Single coin drop is not available
	N/A	Coin Meter	75 pound models; England; 20 pence
	N/A	Coin Meter	75 pound models; South Africa; Single coin drop; M411936 Front Plate
	N/A	Coin Meter	75 pound models; South Korea; 500 won; Single coin drop
	M402508-45	Coin Meter	75 pound models; Spain; 25 pesetas
	N/A	Coin Meter	75 pound models; Taiwan; 10 NT; Single coin drop
	N/A	Coin Meter	75 pound models; Thailand
2	M405138B	Return Spring	
3	M402455	Coil Spring	
4	M400609	Timer Motor	1/60 RPM; 120 Volt/60 Hertz
	M400611P	Motor	1/60 RPM; 240 Volt/60 Hertz
	M410789	Timer Motor	1/30 RPM; 240 Volt/50 Hertz
5	M400947	Switch	Heat
6	N/A	Single Throw Switch	Run
7	M400754	Coin Meter Drive	Timing cam fork
8	M400734P	Timing Cam	2 pin
	M400735P	Timing Cam	3 pin
	M400736P	Timing Cam	4 pin
	M400737P	Timing Cam	5 pin
	M400738P	Timing Cam	6 pin
	M400739P	Timing Cam	7 pin
	M400740P	Timing Cam	8 pin
	M400741P	Timing Cam	9 pin
	M400732P	Timing Cam	10 pin
	M400733P	Timing Cam	12 pin
9	M406297	Coin Retainer Spring	
10	M405138A	Coin Carrier Spring	

N/A = Part no longer available

info@zipnasklade.ru
8(800)500-69-51

© Copyright, Alliance Laundry Systems LLC – DO NOT COPY or TRANSMIT

OPL 120 Volt Micro Control

MM Control Suffix

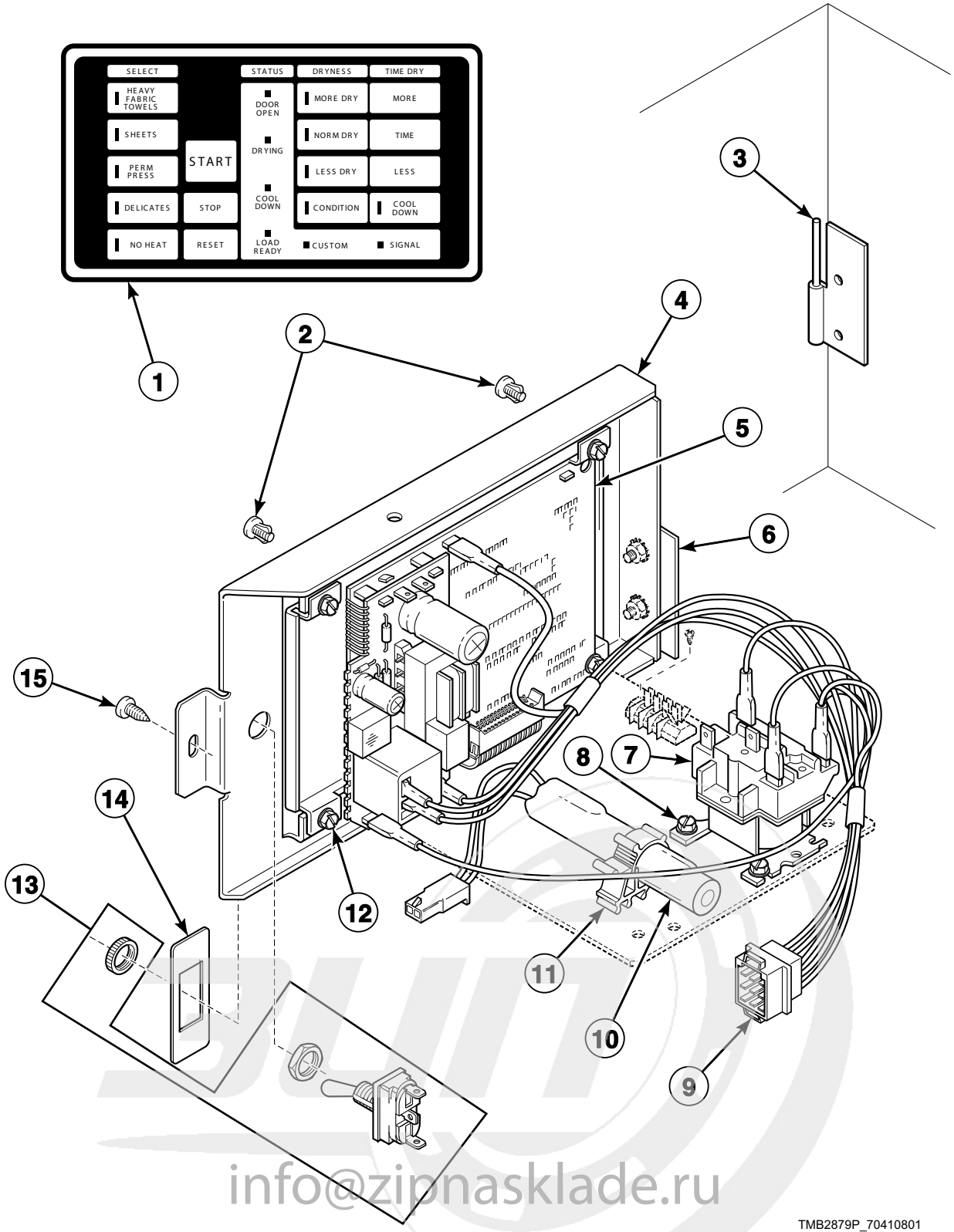

info@zipnasklade.ru
8(800)500-69-51

© Copyright, Alliance Laundry Systems LLC – DO NOT COPY or TRANSMIT

OPL 120 Volt Micro Control

REF	PART NO.	DESCRIPTION	COMMENTS
1	N/A	Microprocessor Overlay	ST models
	N/A	Microprocessor Overlay	JT models
	M412961	Microprocessor Overlay	DT models
2	N/A	Hole Plug	
3	N/A	Hinge	Male
4	M410800	Mounting Plate	
	M413397	Mounting Plate	
5	N/A	Control and Carton Kit	120 Volt
6	N/A	Hinge	Female
7	M400912P	Relay	120 Volt/1 Phase; CR2
8	M400044	Screw	
9	N/A	Control Box Wire Harness Assembly	Nonreversing; 1 Phase
	M411073	Control Box Wire Harness Assembly	Nonreversing; 3 Phase
	N/A	Control Box Wire Harness Assembly	Reversing; 3 Phase
10	N/A	Battery	
11	N/A	Clamp	
12	N/A	Screw	
13	M400945	Toggle Switch	Reversing
	M413270	Rocker Switch	Reversing
14	N/A	Switch Plate	
	M413236	Switch Plate	Reversing; 50 pound models
15	M400664	Screw	

N/A = Part no longer available

info@zipnasklade.ru
8(800)500-69-51

© Copyright, Alliance Laundry Systems LLC – DO NOT COPY or TRANSMIT

OPL 24 Volt Micro Control

OM Control Suffix

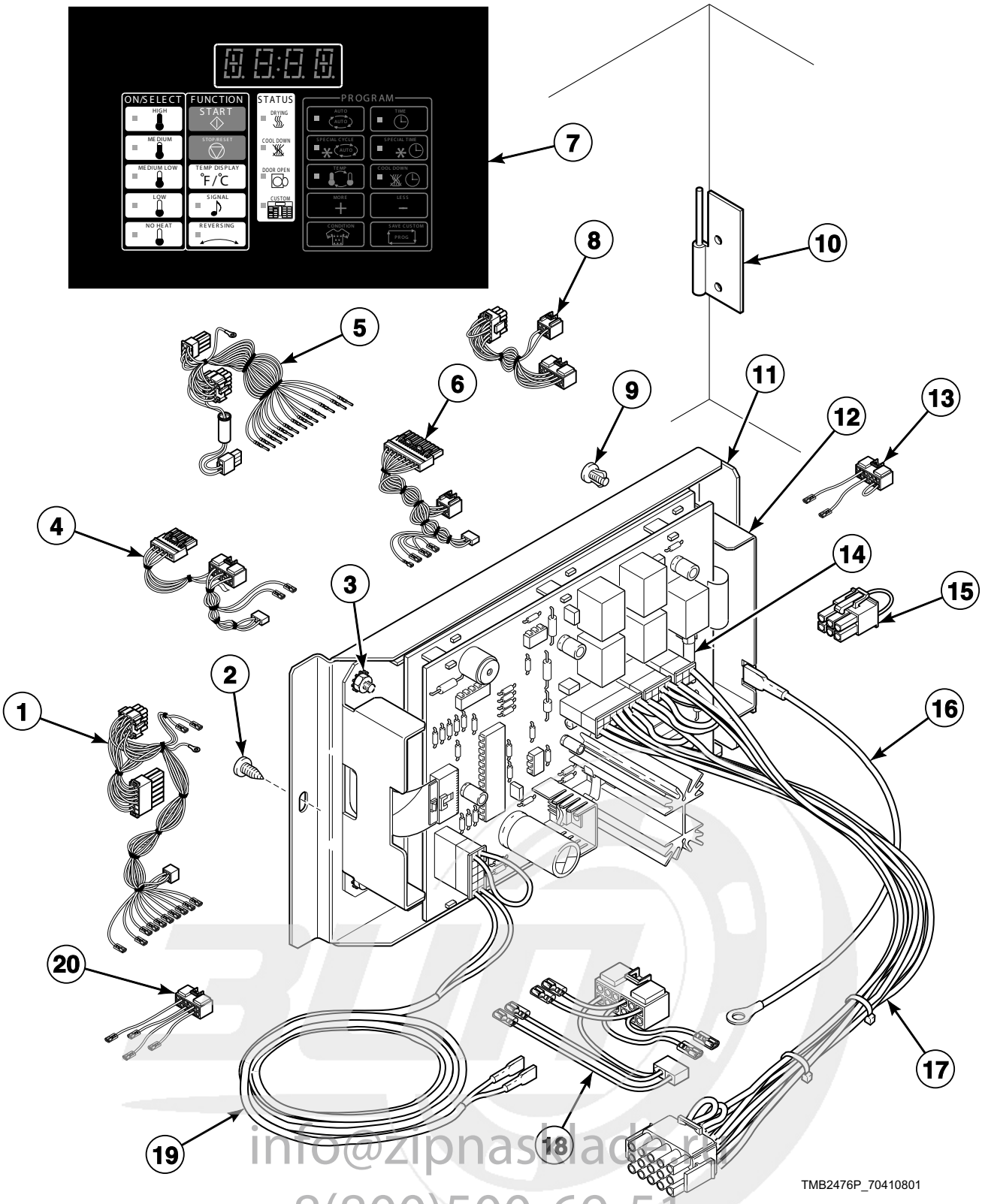

info@zipnasiladen.nl
8(800)500-69-51

© Copyright, Alliance Laundry Systems LLC – DO NOT COPY or TRANSMIT

OPL 24 Volt Micro Control

REF	PART NO.	DESCRIPTION	COMMENTS
1	M413676P	Main Harness Assembly	A, DT, JT, ST and TKD models
2	430497	Screw	
3	70054	Nut	
4	M413678P	Control Box Harness Assembly	634 models
5	44098801	Main Harness	75 pound DC, JC and SC models
6	M413993	Control Box Harness Assembly	DC, JC and SC gas models; 50 Hertz/1 Phase
7	M413417	Microprocessor Overlay	A and STB models; Nonreversing
	N/A	Microprocessor Overlay	A and STB models; Reversing
	N/A	Microprocessor Overlay	JTB models; Nonreversing
	N/A	Microprocessor Overlay	JTB models; Reversing
	M413425	Microprocessor Overlay	DT models; Nonreversing
	M413426	Microprocessor Overlay	DT models; Reversing
	N/A	Microprocessor Overlay	DC models; Nonreversing; Icon
	N/A	Microprocessor Overlay	DC models; Reversing; Icon
	M413423	Microprocessor Overlay	JCB models; Nonreversing; Icon
	N/A	Microprocessor Overlay	JCB models; Reversing; Icon
8	N/A	Control Panel Harness Assembly	DC, JC and SC models; Reversing
9	N/A	Hole Plug	
10	N/A	Hinge	Male
11	M413738	Micro Mounting Assembly	Includes hinge, plate and hardware
12	70228401P	Control Kit	24 Volt; 50 or 60 Hertz
13	M413679	Control Box Harness Assembly	Steam models
14	M414104	Fuse	50 pound models; 2 Amp; Located on back of control
	70406501	Fuse	75 pound models; 1.25 Amp
15	M413168	Bypass Harness Assembly	CG, CSH, CSL and electric models; Reversing
16	M412645	Jumper Wire Assembly	Ground
17	M413677	Micro Harness Assembly	
18	M413824	Control Box Harness Assembly	Gas models; Australian
19	M413559P	Sensor Cable Harness	50 pound models; Nonreversing
	N/A	Sensor Cable Harness Assembly	50 pound models; Reversing
	M413560P	Sensor Cable Harness	75 pound models; Nonreversing
	N/A	Sensor Cable Harness Assembly	75 pound models; Reversing
20	M413680	Control Box Harness Assembly	Electric models; Stove limit and fuse holder to main harness

N/A = Part no longer available

info@zipnasklade.ru
8(800)500-69-51

© Copyright, Alliance Laundry Systems LLC – DO NOT COPY or TRANSMIT

Network Board for NetMaster Models

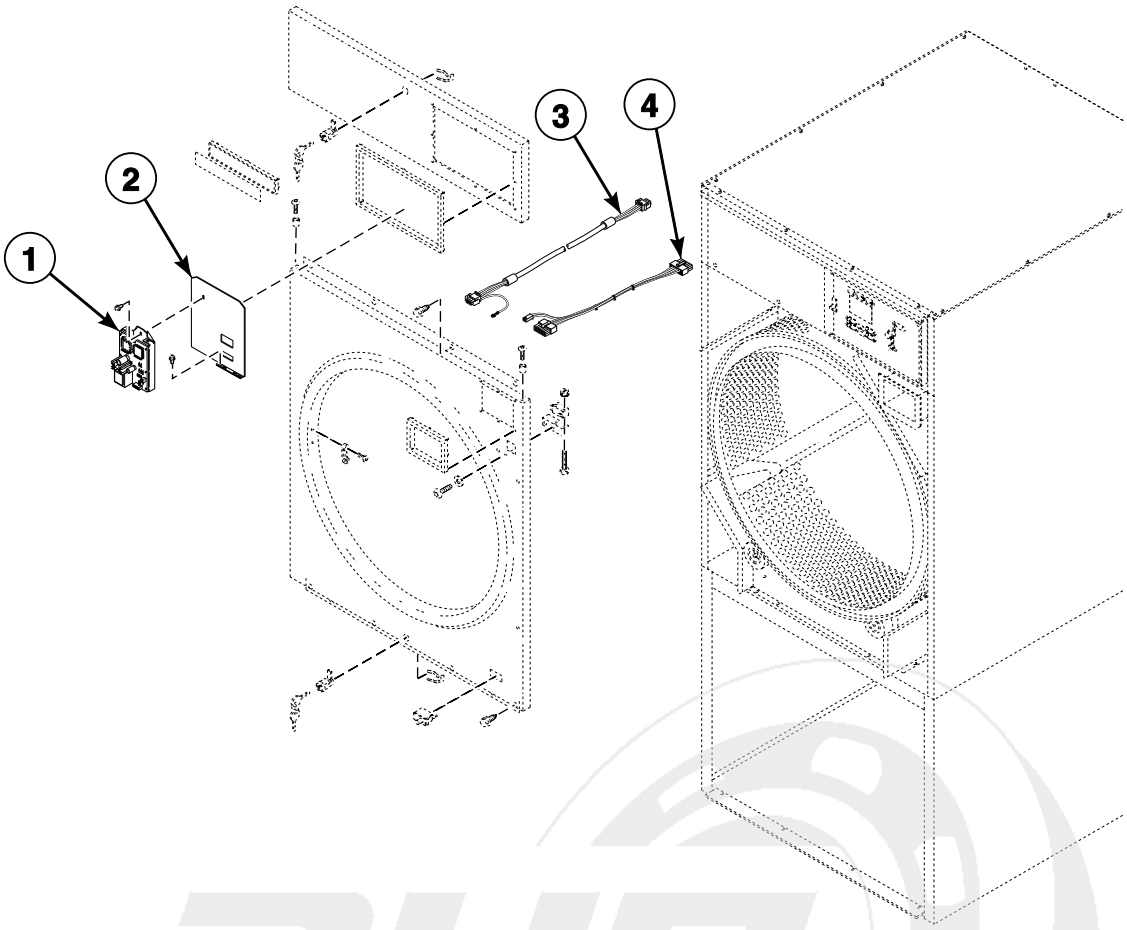

TMB2508P_70410801

info@zipnasklade.ru
8(800)500-69-51

© Copyright, Alliance Laundry Systems LLC – DO NOT COPY or TRANSMIT

Network Board for NetMaster Models

REF	PART NO.	DESCRIPTION	COMMENTS
1	210016P	Network Board Assembly	
2	70201401	Network Plug Support	
3	M414875P	Communication Cable	Network
4	800217	Network Wire Harness Assembly	

info@zipnasklade.ru
8(800)500-69-51

© Copyright, Alliance Laundry Systems LLC – DO NOT COPY or TRANSMIT

Card Reader for NetMaster Models

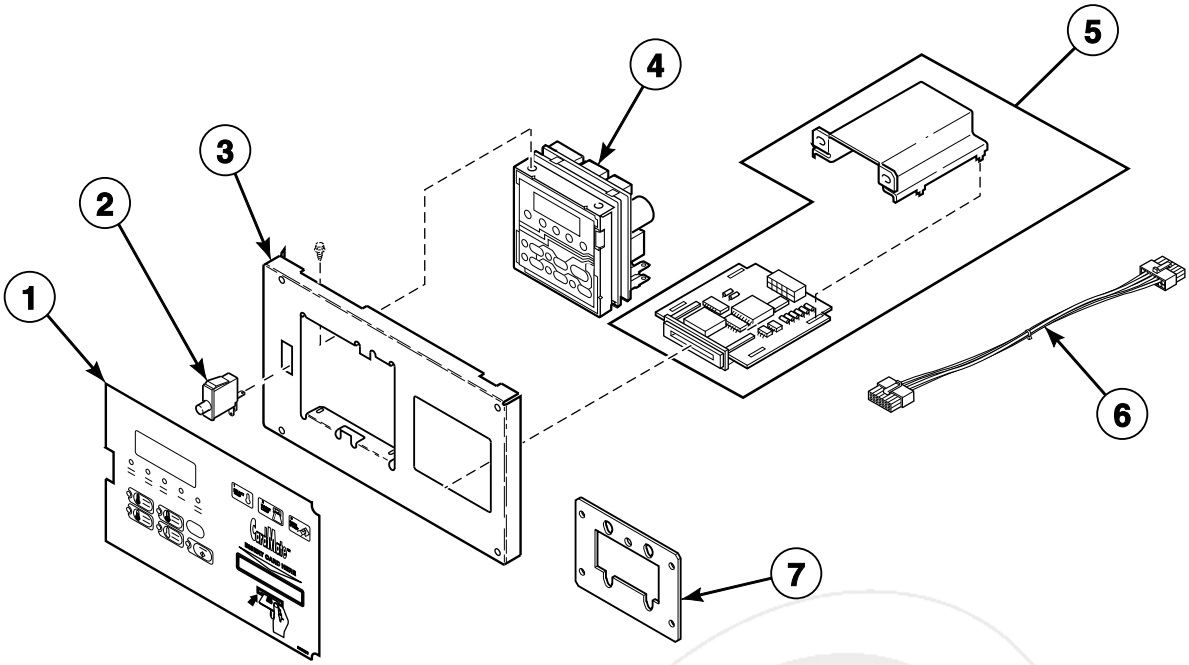

TMB2509P_70410801

info@zipnasklade.ru
8(800)500-69-51

© Copyright, Alliance Laundry Systems LLC – DO NOT COPY or TRANSMIT

Card Reader for NetMaster Models

REF	PART NO.	DESCRIPTION	COMMENTS
1	N/A	Overlay	ST models; Card reader ready
	70184401	Overlay	ST models; Card reader
	N/A	Overlay	JT models; Card reader
	N/A	Overlay	JT models; Card reader ready
2	70413301	Pushbutton Switch	
3	N/A	Control Plate Assembly	Card reader models
	70348801	Control Plate Assembly	Card ready models
4	505905P	Control Kit	Electronic
5	510068P	Card Reader and Bracket Assembly	
6	70206601	Card Reader Network Harness Assembly	
	70211801	Card Reader Harness Assembly	
7	70208801	Mounting Plate	

N/A = Part no longer available

info@zipnasklade.ru
8(800)500-69-51

© Copyright, Alliance Laundry Systems LLC – DO NOT COPY or TRANSMIT

Coin Drop for NetMaster Models

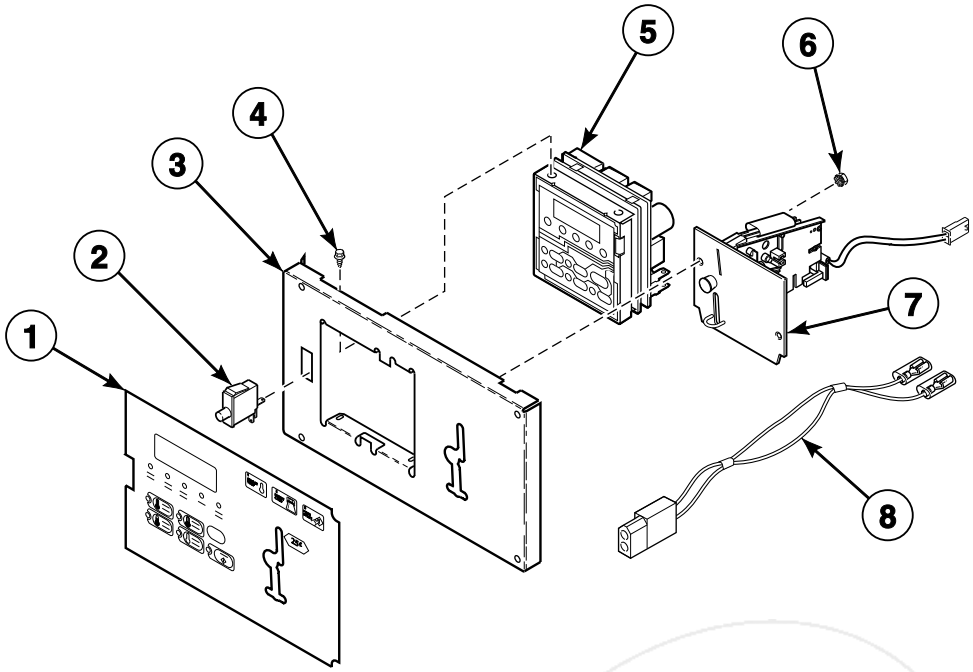

TMB2510P_70410801

info@zipnasklade.ru
8(800)500-69-51

© Copyright, Alliance Laundry Systems LLC – DO NOT COPY or TRANSMIT

Coin Drop for NetMaster Models

REF	PART NO.	DESCRIPTION	COMMENTS
	M4686P3	Electronic Coin Control Kit	DT, JT, ST and T models
1	70184301	Overlay	ST models; English; Single drop
	70184302	Overlay	ST models; Dual drop
	70239601	Overlay	JT models; Single drop
	70239602	Overlay	JT models; Dual drop
2	70413301	Pushbutton Switch	
3	70175807	Control Plate Assembly	
4	501524	Screw	
5	505905P	Control Kit	Electronic
6	70054	Nut	
7	70256402P	Coin Drop	USA; Dual drop; $.25 and $1.00
	70441601P	Coin Drop	USA; $.25
	38475	Coin Drop Assembly	Japan; 100 yen
	38519	Coin Drop Assembly	Japan
8	M414305P	Coin Vault Jumper Wire	Coin and coin ready

info@zipnasklade.ru
8(800)500-69-51

© Copyright, Alliance Laundry Systems LLC – DO NOT COPY or TRANSMIT

Network Interface Board for NetMaster Models

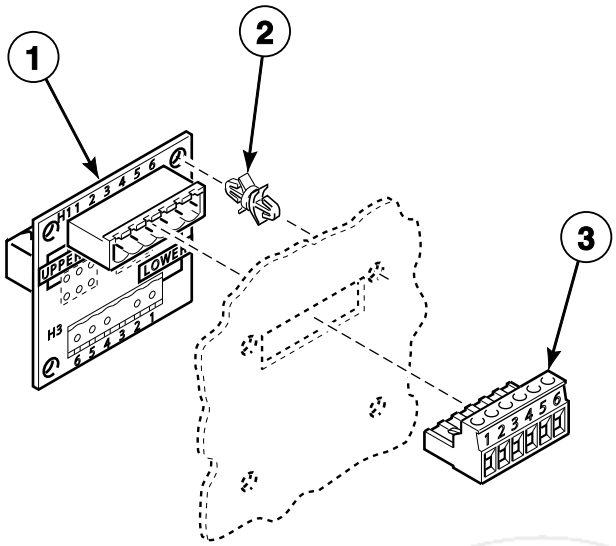

TMB1935P_70410801

info@zipnasklade.ru
8(800)500-69-51

© Copyright, Alliance Laundry Systems LLC – DO NOT COPY or TRANSMIT

Network Interface Board for NetMaster Models

REF	PART NO.	DESCRIPTION	COMMENTS
1	210095P	Communication Board	
2	210098	PC Board Standoff	4 required per machine
3	210155	3 Circuit Data Connector	

info@zipnasklade.ru
8(800)500-69-51

© Copyright, Alliance Laundry Systems LLC – DO NOT COPY or TRANSMIT

Front Control Box Components

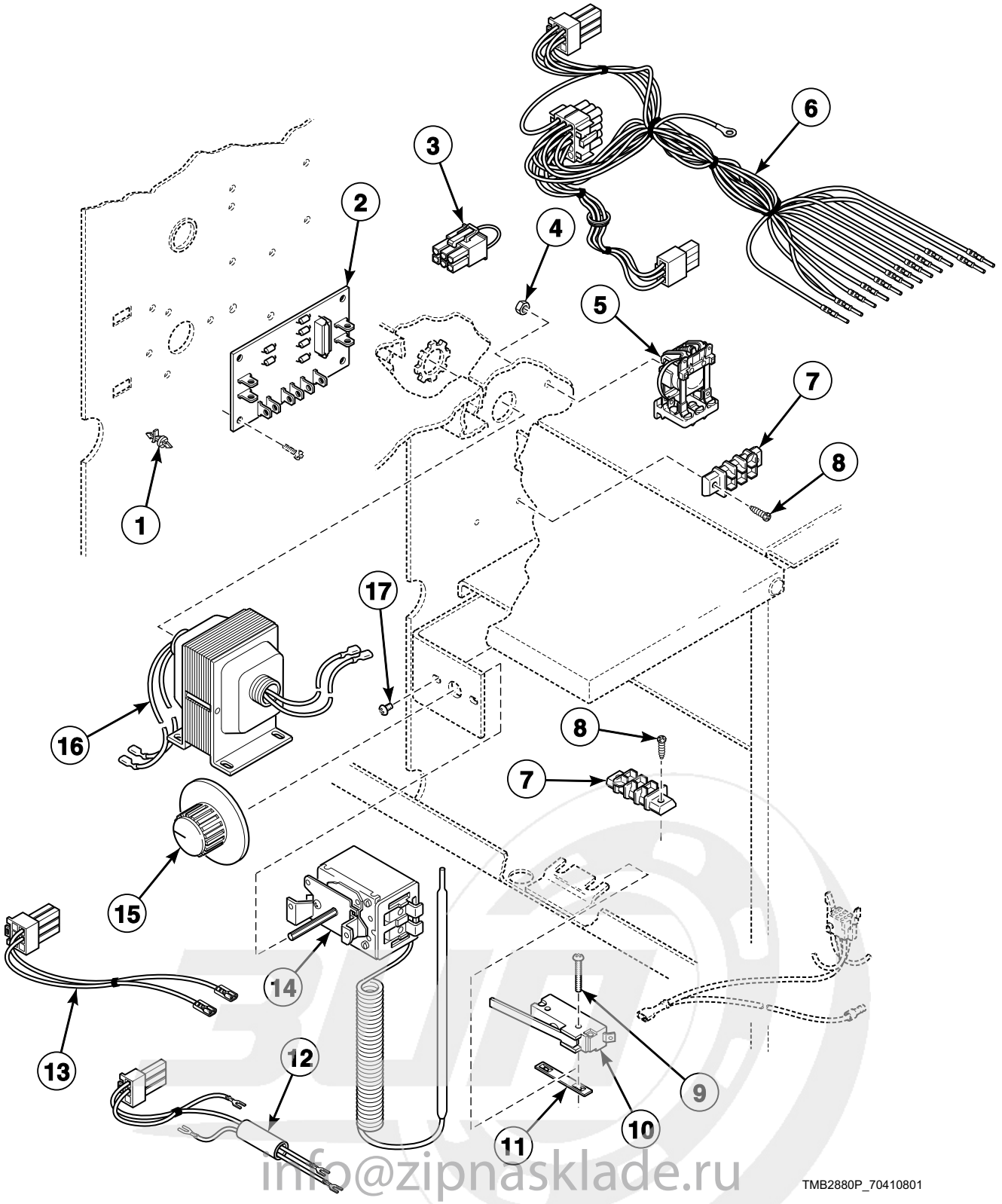

info@zipnasklade.ru
8(800)500-69-51

© Copyright, Alliance Laundry Systems LLC – DO NOT COPY or TRANSMIT

Front Control Box Components

REF	PART NO.	DESCRIPTION	COMMENTS
1	M405979	Circuit Board Support	Gas models; White Rogers glow bar ignition
2	M405897P	Diode Logic Board	Gas models; White Rogers glow bar ignition
3	M413168	Bypass Harness Assembly	CG, CSH, CSL and electric models; OM control suffix
4	02788	Nut	Gas models; Johnson glow bar ignition
5	N/A	Relay	Gas models; Johnson glow bar ignition
6	M413546	Main Harness Assembly	75 pound DC, JC and SC steam models
7	N/A	Terminal Block	
8	M400071	Screw	
9	Q6516	Screw	
10	M400952	Door Switch	
11	M400981	Nut	
12	M412459	Door Switch Harness Assembly	75 pound DC, JC and SC models
13	N/A	Thermostat Harness Assembly	75 pound DC, JC and SC steam models; Manual timer and mechanical coin drop with bulb thermostat; 50 Hertz
14	M400780P	Temperature Control Thermostat	50 pound models; Adjustable
	M406959P	Temperature Control Thermostat	75 pound models; Adjustable
15	M400777	Knob	A, DT and ST models; Black
	N/A	Temperature Control Knob	JT models; Brown
16	M401199P	Transformer Kit	120 Volt Primary/24 Volt Secondary
	M401391P	Transformer	208-600 Volt Primary/110 Volt Secondary
	M402650P	Transformer	208-240 Volt Primary/24 Volt Secondary
17	M400072	Screw	

N/A = Part no longer available

info@zipnasklade.ru
8(800)500-69-51

© Copyright, Alliance Laundry Systems LLC – DO NOT COPY or TRANSMIT

Coin Vault and Coin Drawer

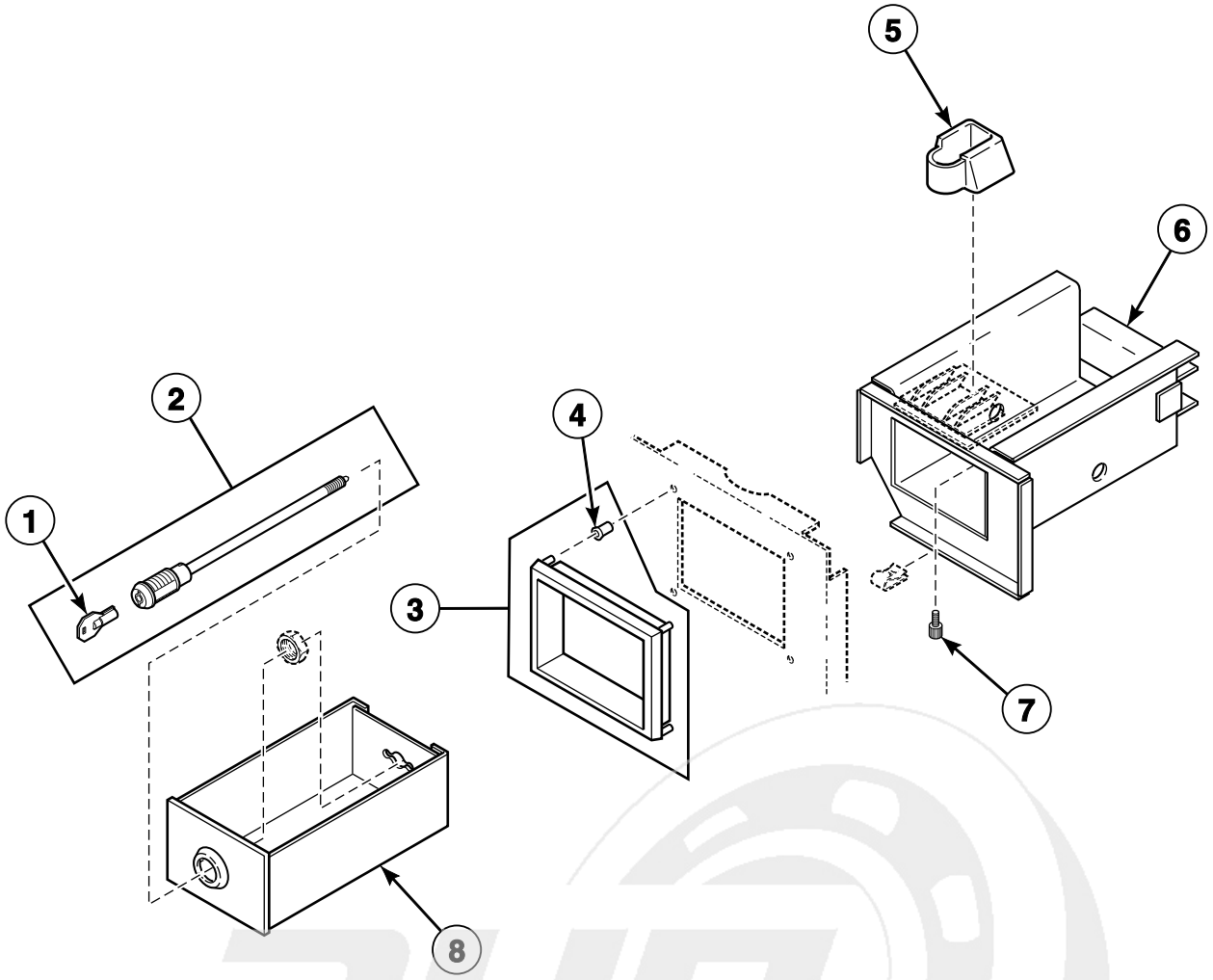

TMB2130P_70410801

info@zipnasklade.ru
8(800)500-69-51

© Copyright, Alliance Laundry Systems LLC – DO NOT COPY or TRANSMIT

Coin Vault and Coin Drawer

REF	PART NO.	DESCRIPTION	COMMENTS
1	M401701	Vault Key	Specify HMX key code; For coin drawer locks
2	M401581P	Lock and Key	Specify HMX key code; For short coin drawer
	N/A	Vault Lock	Specify HMX key code; For long coin drawer; Includes key
3	M400131P	Shadow Box and Clip	Coin drawer
4	M400972	Shadow Box Clip	
5	N/A	Coin Chute	
6	N/A	Coin Vault Guide Assembly	Short drawer; Models through Serial No. 9312xxxxx
	44102801	Coin Vault Assembly	Long drawer; Models starting Serial No. 9401xxxxx
7	N/A	Screw	
8	N/A	Coin Drawer Assembly	Short
	N/A	Coin Drawer Assembly	Long

N/A = Part no longer available

info@zipnasklade.ru
8(800)500-69-51

© Copyright, Alliance Laundry Systems LLC – DO NOT COPY or TRANSMIT

Access Panel and Top Cover

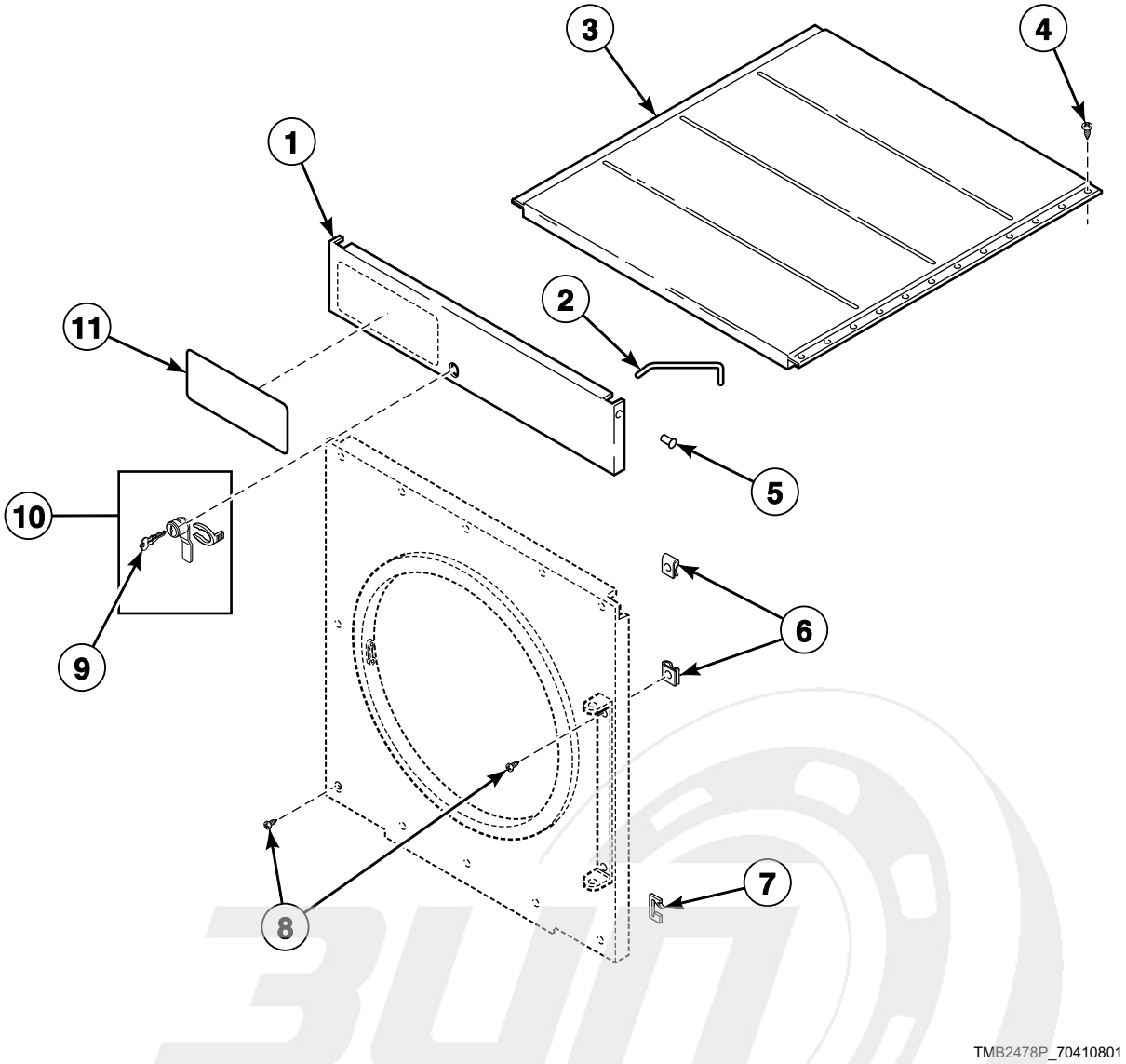

info@zipnasklade.ru
8(800)500-69-51

© Copyright, Alliance Laundry Systems LLC – DO NOT COPY or TRANSMIT

Access Panel and Top Cover

REF	PART NO.	DESCRIPTION	COMMENTS
	431287	Screw	Side panel; 7 per side
1	M414350	Top Front Panel	Manual dual timer and coin meter; Stainless steel
	M414349*P	Top Front Panel Assembly	DC, JC and SC electric and steam models; Manual dual timer and coin meter
	M410801*P	Top Front Access Panel	MM and OM control suffixes
	M410802	Top Front Access Panel	MM and OM control suffixes; Stainless steel
	N/A	Top Front Panel	DC, JC and SC gas models
2	N/A	Support Rod	
3	N/A	Top Cover Panel	50 pound models
	M403385	Top Cover Panel	75 pound models
4	430497	Screw	
5	M400713	Drive Rivet	
6	M400984	Clip	
7	N/A	Clip	
8	N/A	Screw	
9	M401680	Panel Key	HMV10
	M401677	Panel Key	HMV7
10	N/A	Panel Lock	Manual dual timer; Includes key
	N/A	Lock and Key	MM and OM control suffixes
11	M410355	Nameplate	ST models; Microprocessor
	N/A	Nameplate	JT models; Microprocessor
	M412963	Nameplate Overlay	DT models; Microprocessor
	70240801	Nameplate Overlay	A models

*** Add Letter To Designate Color. L - Almond W - White**

N/A = Part no longer available

info@zipnasklade.ru
8(800)500-69-51

© Copyright, Alliance Laundry Systems LLC – DO NOT COPY or TRANSMIT

Front Panel and Door

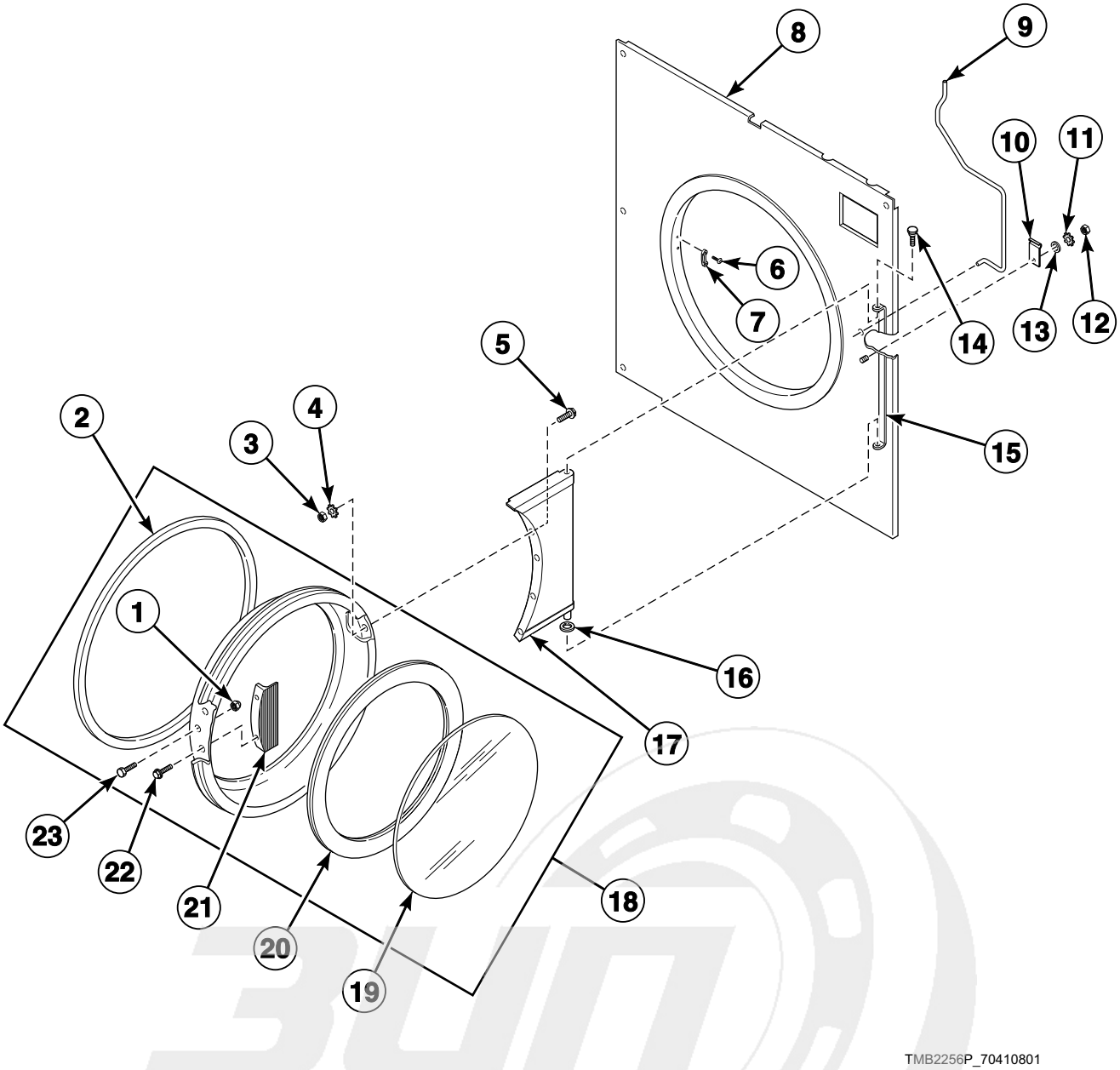

info@zipnasklade.ru
8(800)500-69-51

© Copyright, Alliance Laundry Systems LLC – DO NOT COPY or TRANSMIT

Front Panel and Door

REF	PART NO.	DESCRIPTION	COMMENTS
	M4379P4	Tumbler Dolly Kit	
1	M414215	Nut	For M400447 Door Assembly and M410887 Door Assembly
2	M406129	Door Ring Gasket	
3	Q6163	Nut	
4	03815	Washer	
5	M400044	Screw	
6	M400003	Pop Rivet	
7	M401223	Door Latch	
8	M411129*P	Front Panel Assembly	OPL
	M411132P	Front Panel Assembly	OPL; Stainless steel
	M412792*P	Front Panel Assembly	DC, JC and SC models
	M410758LP	Front Panel Assembly	Coin; 50 pound models
	M410877*P	Front Panel Assembly	Coin
	N/A	Front Panel Assembly	Coin; Stainless steel
9	M400603	Door Switch Rod	
10	M400402	Spring Clip	
11	M400017	Washer	
12	20275	Nut	
13	03189	Washer	
14	M400653	Hinge Pin	
15	431000*	Hinge Bracket	
	431044	Hinge Bracket	Stainless steel
16	M400675	Washer	
	M412530	Washer	DC, JC and SC models
17	M402714*	Door Hinge Assembly	
	M400514	Hinge Assembly	Stainless steel
	N/A	Door Hinge Assembly	DC, JC and SC models
18	M400447P	Door Assembly	Chrome handle
	M410887	Door Assembly	J models; Cocoa handle
	430475	Door Assembly	D, JCB and ST models; Bar handle
19	M400784P	Door Glass	DT and ST models
	70133601P	Door Glass	JT models; For M410887 Door Assembly
20	70211901P	Door Glass Seal Kit	
21	M400133	Door Handle	Chrome
	430117	Door Handle	DT and ST models; Bar type
	70133501P	Replacement Door Handle Kit	JT models; Cocoa
22	M409385	Screw	
23	M400661	Screw	Door strike

*** Add Letter To Designate Color. L - Almond W - White**

N/A = Part no longer available

info@zipnasklade.ru
8(800)500-69-51

© Copyright, Alliance Laundry Systems LLC – DO NOT COPY or TRANSMIT

Door Switch

DC, JC and SC Models

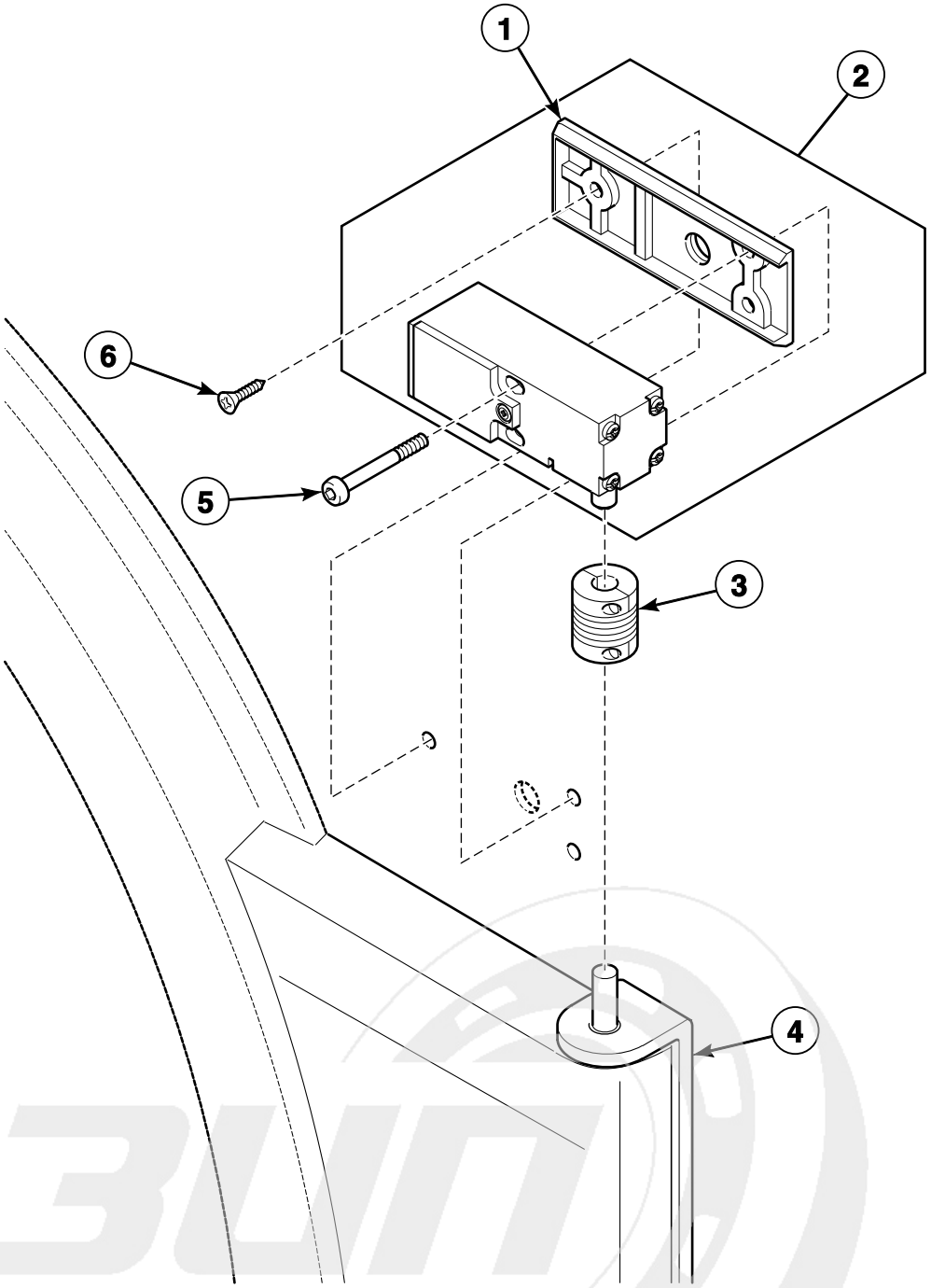

TMB2257P_70410801

info@zipnasklade.ru
8(800)500-69-51

© Copyright, Alliance Laundry Systems LLC – DO NOT COPY or TRANSMIT

Door Switch

REF	PART NO.	DESCRIPTION	COMMENTS
1	M412528	Switch Base	
2	M4842P3	Door Safety Switch Kit	Includes item 1
3	M412551	Flexible Coupler	
4	N/A	Door Hinge Assembly	
5	N/A	Screw	
6	M412531	Screw	

N/A = Part no longer available

info@zipnasklade.ru
8(800)500-69-51

© Copyright, Alliance Laundry Systems LLC – DO NOT COPY or TRANSMIT

Panels, Lint Hood Assembly and Lint Screen

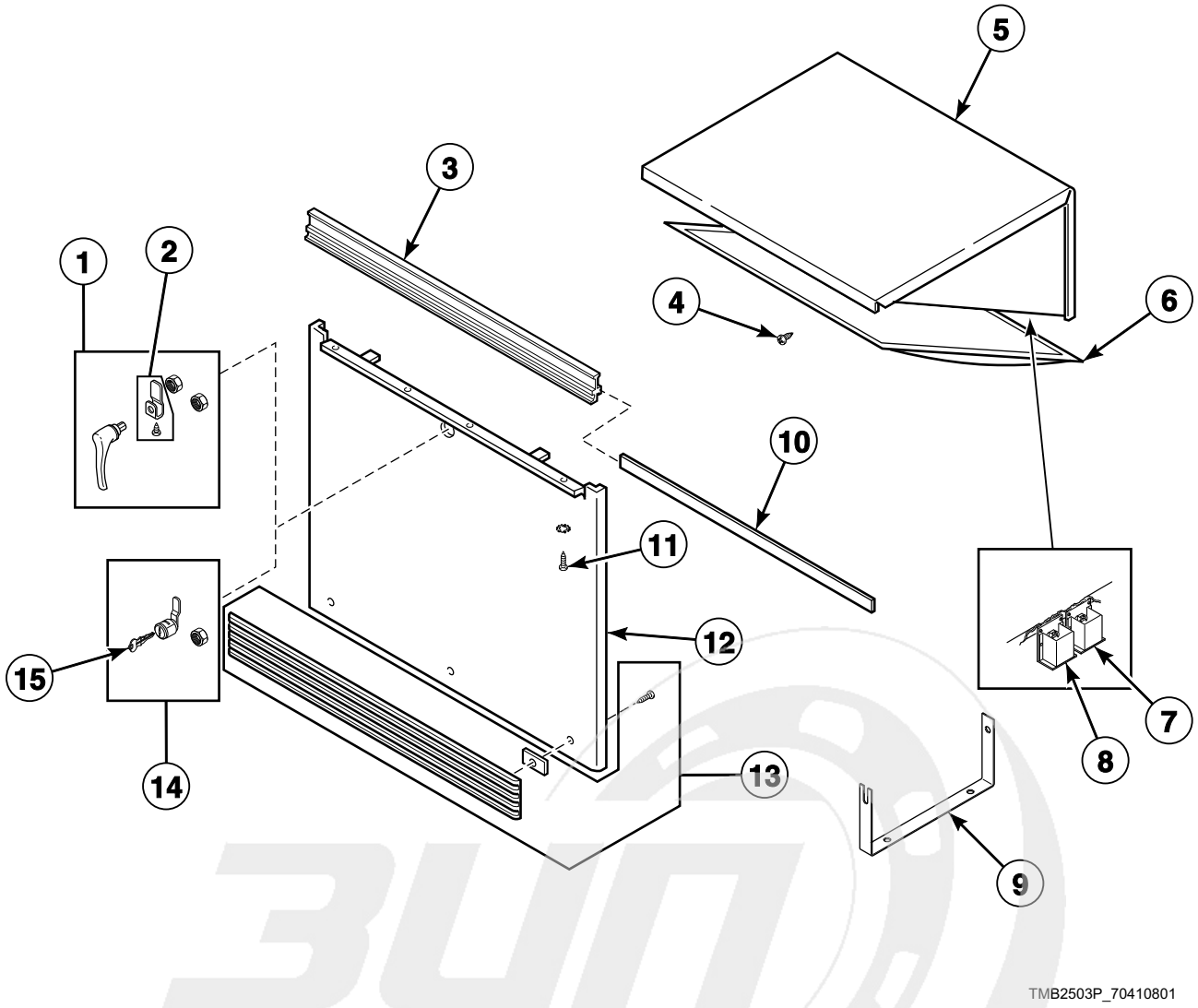

info@zipnasklade.ru
8(800)500-69-51

© Copyright, Alliance Laundry Systems LLC – DO NOT COPY or TRANSMIT

Panels, Lint Hood Assembly and Lint Screen

REF	PART NO.	DESCRIPTION	COMMENTS
1	M410243P	Handle and Cam Assembly	MT and OM control suffixes
2	M400595	Cam and Screw	MT and OM control suffixes
3	N/A	Bumper Assembly	Models through Serial No. 729580ZJ; Includes 4 of M400657 Screw and 4 of 03815 Washer; Chrome
	N/A	Lint Panel Bumper	Models starting Serial No. 729581ZJ; Black
	N/A	Lint Panel Bumper	JT models; Cocoa
4	430757	Screw	50 pound models
	M400664	Screw	75 pound models
5	M400515	Lint Hood Assembly	
6	M400522	Lint Screen Assembly	
7	M414704	Thermistor	50 pound models; MM and OM control suffixes
	M410542	Limit Thermostat	75 pound models except EG; Attach to center pan above head
8	M410542	Limit Thermostat	50 pound CG models
	M411813	Limit Thermostat	50 pound electric models
	510523	Thermistor Assembly	75 pound models; MM and MT control suffixes
	M414704	Thermistor	75 pound models; OM control suffix; Threads into bracket; Attach to center pan above head
	M413212P	Thermistor Assembly	75 pound models; Replacement for early screw mounted thermistor
9	M401312	Thermostat Bracket	
10	N/A	Bumper Insert Trim	
11	430757	Screw	4 required for M410784 Lint Panel Bumper; Models starting Serial No. 72958123
12	M400464LP	Lint Panel Assembly	Plain; Models through Serial No. 729580ZJ; 634 models require 2 lint panel handles
	M402722LP	Lint Panel Assembly	Textured; Models through Serial No. 729580ZJ; 634 models require 2 lint panel handles
	M405646	Lint Panel Assembly	Stainless steel; Models through Serial No. 729580ZJ; 634 models require 2 lint panel handles
	M414796*P	Lint Panel Assembly	DT, JT and STB models; Models starting Serial No. 729581ZJ
	N/A	Lint Panel Assembly	Stainless steel; DT, JT and STB models; Models starting Serial No. 729581ZJ
	M414798*P	Lint Panel Assembly	FG and 634 models; 2 lint panel handles
	M414799P	Lint Panel Assembly	Stainless steel; FG and 634 models; 2 lint panel handles
13	M414438P	Kickplate Kit	Includes screws and nuts
14	M406654P	Panel Lock	HMV10; Includes key; 634 models requires 2 locks
15	M401680	Panel Key	HMV10

*** Add Letter To Designate Color. L - Almond W - White**

N/A = Part no longer available

info@zipnasklade.ru
8(800)500-69-51

© Copyright, Alliance Laundry Systems LLC – DO NOT COPY or TRANSMIT

Cylinder and Trunnion Assemblies

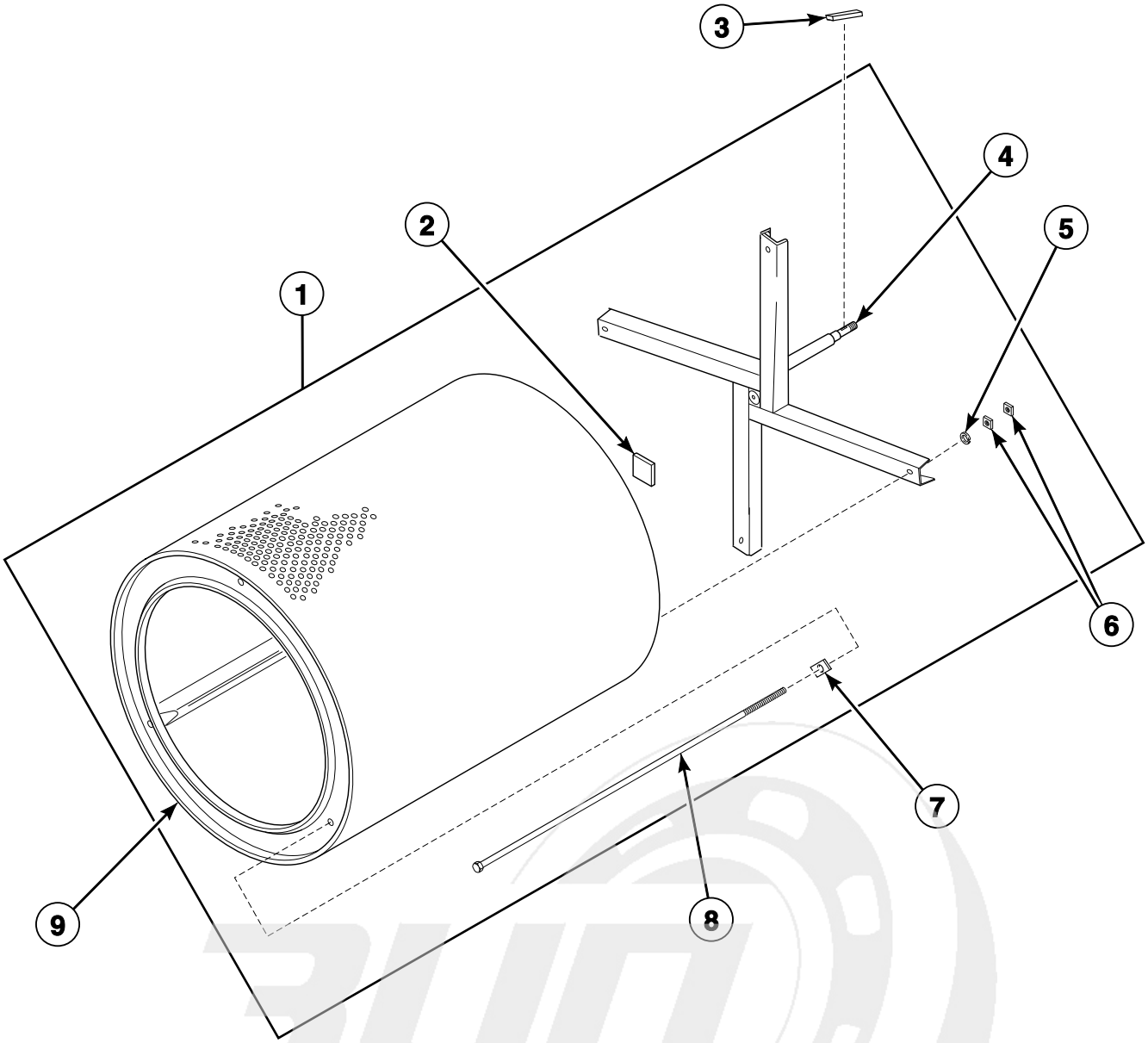

TMB1807B_70410801

info@zipnasklade.ru
8(800)500-69-51

© Copyright, Alliance Laundry Systems LLC – DO NOT COPY or TRANSMIT

Cylinder and Trunnion Assemblies

REF	PART NO.	DESCRIPTION	COMMENTS
	M4819P3	Cylinder, Trunnion and Bearing Housing Kit	50 pound models; Nonreversing
	M4820P3	Cylinder, Trunnion and Bearing Housing Kit	50 pound models; Nonreversing; Stainless steel
	M4821P3	Cylinder, Trunnion and Bearing Housing Kit	50 pound models; Reversing
	M4638P3	Trunnion and Bearing Assembly	50 pound models; Nonreversing
	M4639P3	Trunnion and Bearing Assembly	50 pound models; Reversing
	M4640P3	Trunnion and Bearing Assembly	75 pound models except DTB634 and STB634; Nonreversing; Anti-fretting; Includes bearings, trunnion and anti-seize compound
	M4641P3	Trunnion and Bearing Assembly	75 pound models; Reversing; Anti-fretting; Includes bearings, trunnion and anti-seize compound
1	44068901P	Cylinder and Trunnion Assembly	50 pound models; Nonreversing
	44069001	Cylinder and Trunnion Assembly	50 pound models; Nonreversing; Stainless steel
	44037101	Cylinder and Trunnion Assembly	50 pound models; Reversing
	44037201	Cylinder and Trunnion Assembly	50 pound models; Reversing; Stainless steel
	M406906P	Cylinder and Trunnion Assembly	75 pound models; Nonreversing
	M409090P	Cylinder and Trunnion Assembly	75 pound models; Reversing
	M409015P	Cylinder and Trunnion Assembly	75 pound models; Nonreversing; Stainless steel
	M409091	Cylinder and Trunnion Assembly	75 pound models; Reversing; Stainless steel
2	M402144	Felt Pad	
3	M400008	Key	Nonreversing; Half moon
	M405232	Key	Reversing; Straight
4	M413833P	Trunnion Assembly	50 pound models; Nonreversing
	M413834P	Trunnion Kit	50 pound models; Reversing
	44261801	Trunnion Kit	75 pound models; Nonreversing; Includes nuts and key
	M413836	Trunnion Assembly	75 pound models; Reversing
5	M400013	Washer	Nonreversing
	91200	Washer	Reversing
6	M401930	Nut	50 pound models; Nonreversing; 2 required per rod
	M404993	Nut	50 pound models; Reversing; 1 required per rod
	M404993	Nut	75 pound models
7	M401947	Washer	50 pound models; Nonreversing
	M401402	Spacer	75 pound models
8	M400901	Rib Rod	50 pound models; Nonreversing
	M401411	Rib Rod	50 pound models; Reversing
	M404992	Rib Rod	75 pound models
9	M400439P	Cylinder	50 pound models; Nonreversing
	M400440P	Cylinder	50 pound models; Nonreversing; Stainless steel
	M405009P	Cylinder Assembly	50 pound models; Reversing
	M405365P	Cylinder	50 pound models; Reversing; Stainless steel
	M401985P	Cylinder	75 pound models; Galvanized
	M402517P	Cylinder	75 pound models; Stainless steel

N/A = Part no longer available

info@zipnasklade.ru
8(800)500-69-51

© Copyright, Alliance Laundry Systems LLC – DO NOT COPY or TRANSMIT

Trunnion Housing and Sprockets

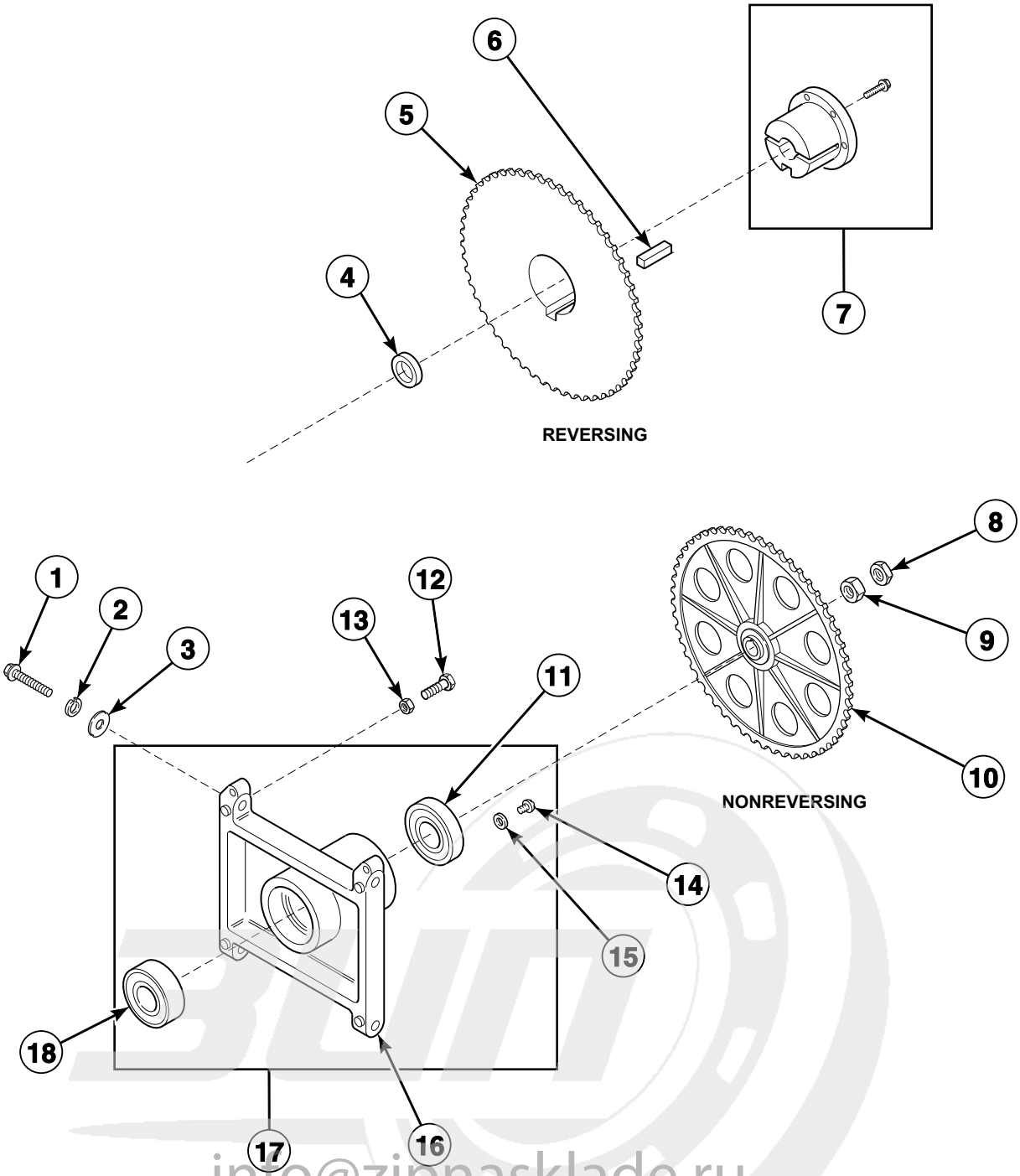

info@zipnasklade.ru
8(800)500-69-51

© Copyright, Alliance Laundry Systems LLC – DO NOT COPY or TRANSMIT

Trunnion Housing and Sprockets

REF	PART NO.	DESCRIPTION	COMMENTS
	BDK5075R	Belt Drive Conversion Kit	Use to convert machine to a belt/belt drive
1	M400063	Screw	
2	91200	Washer	
3	N/A	Washer	
4	44024001	Spacer	Reversing
5	N/A	Sprocket	Reversing; Order BDK5075R Belt Drive Conversion Kit to replace sprocket
6	M405232	Key	Reversing
7	M403432P	Bushing	For trunnion sprocket; Reversing; Includes screw
8	M400035	Nut	Nonreversing
9	M400033	Nut	Nonreversing
10	M400090P	Sprocket	Nonreversing; Includes key
11	M413921P	Ball Bearing	50 pound models
	F100136P	Bearing	75 pound models; Outer trunnion
12	M400650	Bolt	
13	20274	Nut	
14	M409385	Screw	
15	20103	Washer	
16	N/A	Trunnion Housing Casting	50 pound models
	M413826	Trunnion Housing	75 pound models
17	N/A	Trunnion Housing Assembly	Includes items 11, 14-16 and 18; 50 pound models
	M4642P3	Housing and Trunnion Assembly	Nonreversing; 50 pound models; Includes trunnion
	M4643P3	Housing and Trunnion Assembly	Reversing; 50 pound models; Includes trunnion
	M413832	Trunnion Housing Assembly	75 pound models
18	M413922P	Ball Bearing	50 pound models
	44041901P	Ball Bearing	75 pound models; Inner trunnion

N/A = Part no longer available

info@zipnasklade.ru
8(800)500-69-51

© Copyright, Alliance Laundry Systems LLC – DO NOT COPY or TRANSMIT

Idler Drive Components for Nonreversing Belt/Chain Drive

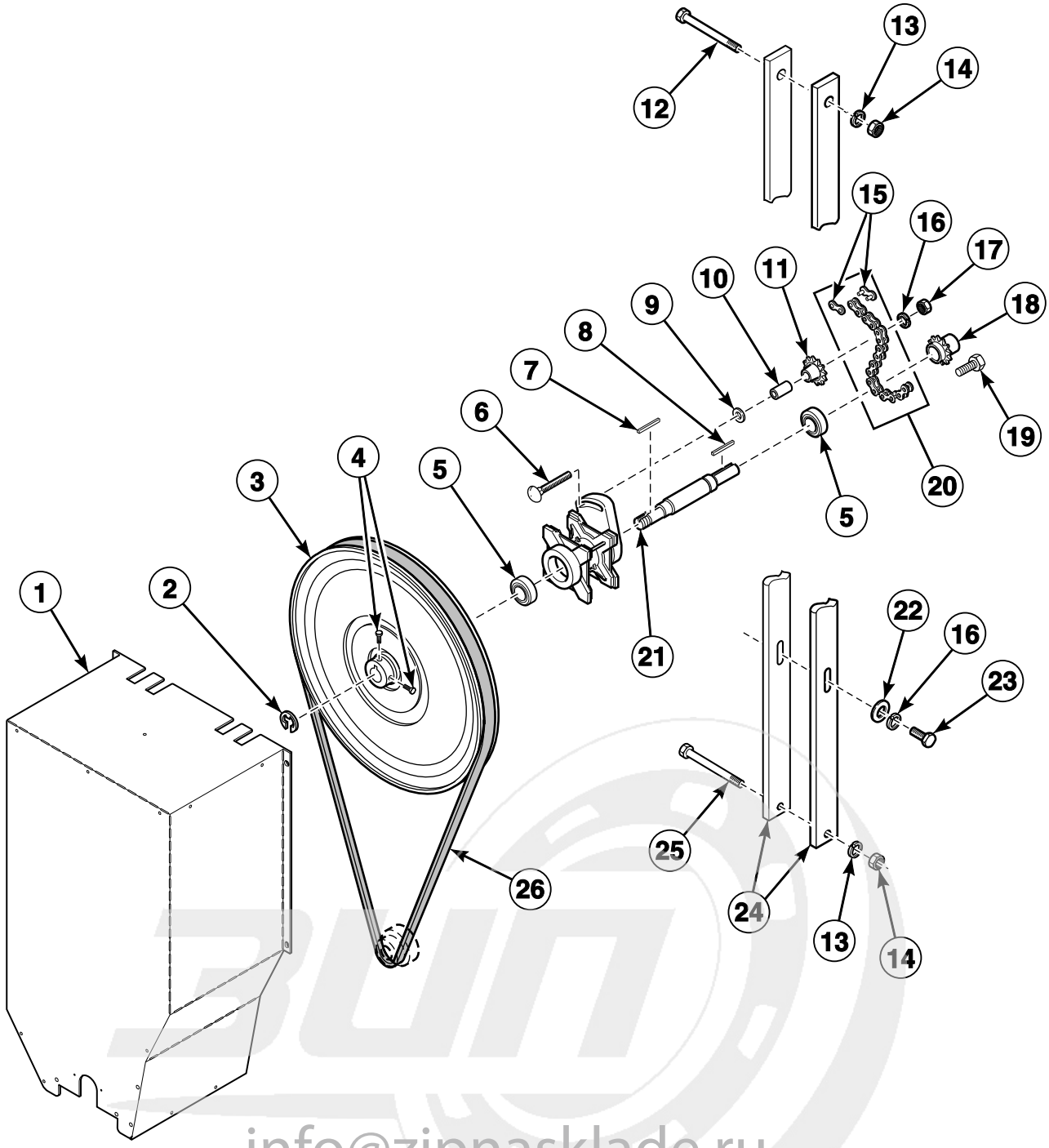

info@zipnasklade.ru
8(800)500-69-51

© Copyright, Alliance Laundry Systems LLC – DO NOT COPY or TRANSMIT

Idler Drive Components for Nonreversing Belt/Chain Drive

REF	PART NO.	DESCRIPTION	COMMENTS
	BDK5075	Belt Drive Conversion Kit	Use to convert belt/chain drive machine to belt/belt drive
	M4322P3	Idler Kit	Includes items 6, 10, 11, 16, 17 and 23
1	44132401	Belt Guard Assembly	50 pound models except EG; Models through Serial No. 0004xxxxx
	44132405	Belt Guard Assembly	75 pound models except EG; Models starting Serial No. 0004xxxxx
	M409350	Chain Guard Assembly	EG models
2	M400399	Ring	
3	44086901P	Sheave Kit	Includes hardware
4	M400065	Screw	
5	M400592	Ball Bearing	
6	M412475	Bolt	
7	M401327	Key	
8	M400993	Key	
9	M400080	Washer	
10	M400755P	Chain Sleeve	
11	M401369P	Chain Sprocket	
12	M405525	Screw	
13	M400013	Washer	
14	M400026	Nut	50 pound models
	02428	Nut	75 pound models
15	M401360P	Chain Connecting Link	
16	M400014	Washer	
17	M400026	Nut	
18	M401365P	Sprocket	
19	62541	Screw	
20	M401425	Roller Chain	
21	M412223P	Idler Shaft	
22	M400081	Washer	
23	M405525	Screw	
24	M412476	Guide Rail	
25	M405525	Screw	50 pound models
	M400061	Screw	75 pound models
26	M401182P	Belt	

info@zipnasklade.ru
8(800)500-69-51

© Copyright, Alliance Laundry Systems LLC – DO NOT COPY or TRANSMIT

Idler Drive Components for Nonreversing Belt/Belt Drive

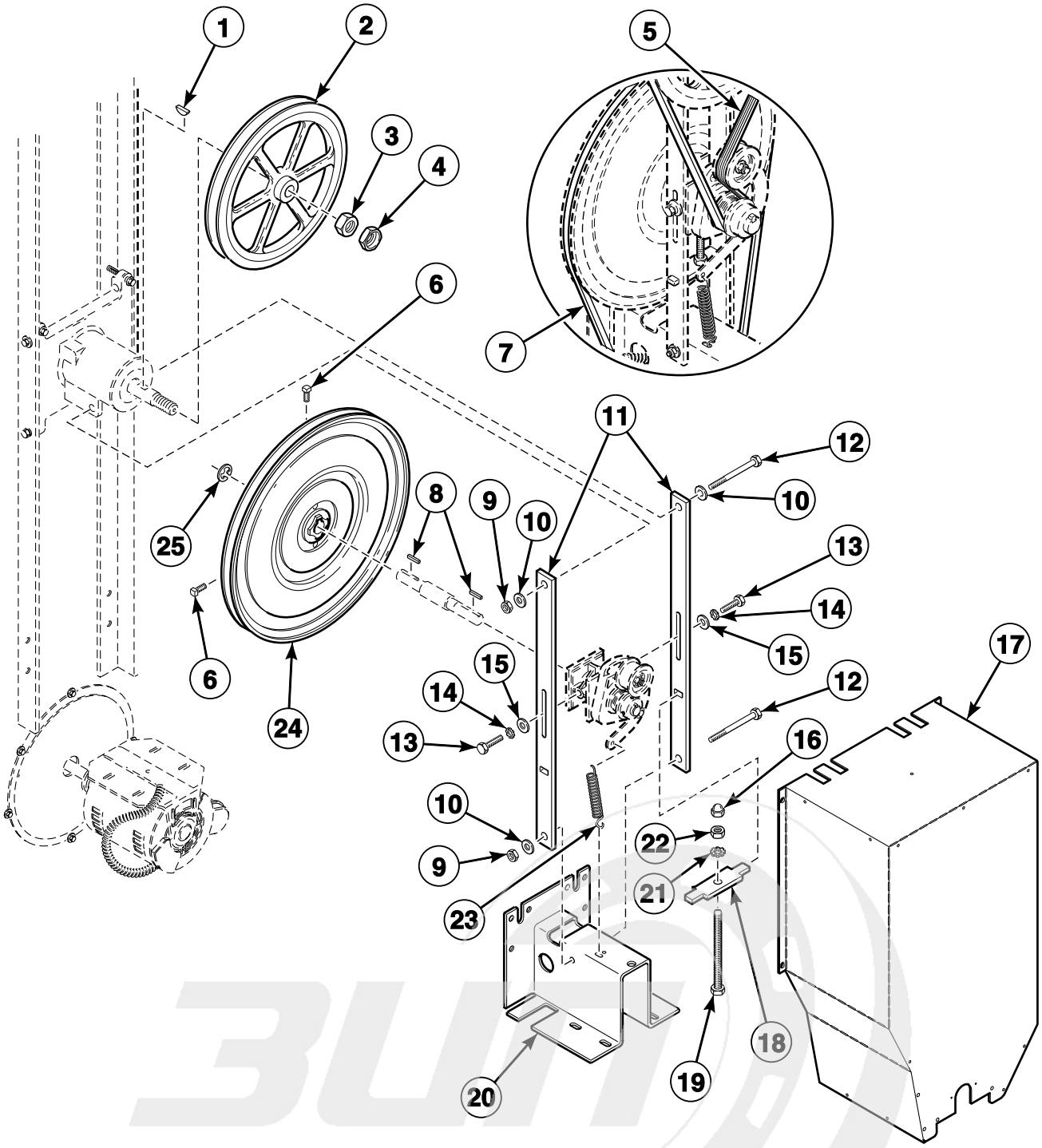

info@zipnasklade.ru
8(800)500-69-51

© Copyright, Alliance Laundry Systems LLC – DO NOT COPY or TRANSMIT

Idler Drive Components for Nonreversing Belt/Belt Drive

REF	PART NO.	DESCRIPTION	COMMENTS
1	M400008	Key	
2	M412156	Micro V Sheave	
3	M400033	Nut	
4	M400035	Nut	
5	M411425P	Micro V Belt	
6	M400065	Screw	
7	M401182P	Belt	
8	M401327	Key	
9	M400026	Nut	
10	M400014	Washer	
11	M412476	Guide Rail	
12	M405525	Screw	
13	M400043	Screw	
14	M403958	Washer	
15	M400081	Washer	
16	M412626	Nut	
17	44132401	Belt Guard Assembly	50 pound models except EG; Models through Serial No. 0004xxxxx
	44132405	Belt Guard Assembly	75 pound models
18	M414405	Tension Plate Assembly	
19	M412627	Screw	
20	M411483	Motor Bracket	
21	M412188	Washer	
22	M404993	Nut	
23	M412120	Extension Spring	
24	44086901P	Sheave Kit	Includes items 6 and 8
25	M400399	Ring	

info@zipnasklade.ru
8(800)500-69-51

© Copyright, Alliance Laundry Systems LLC – DO NOT COPY or TRANSMIT

Idler Housing Assembly For Nonreversing Belt/Belt Drive

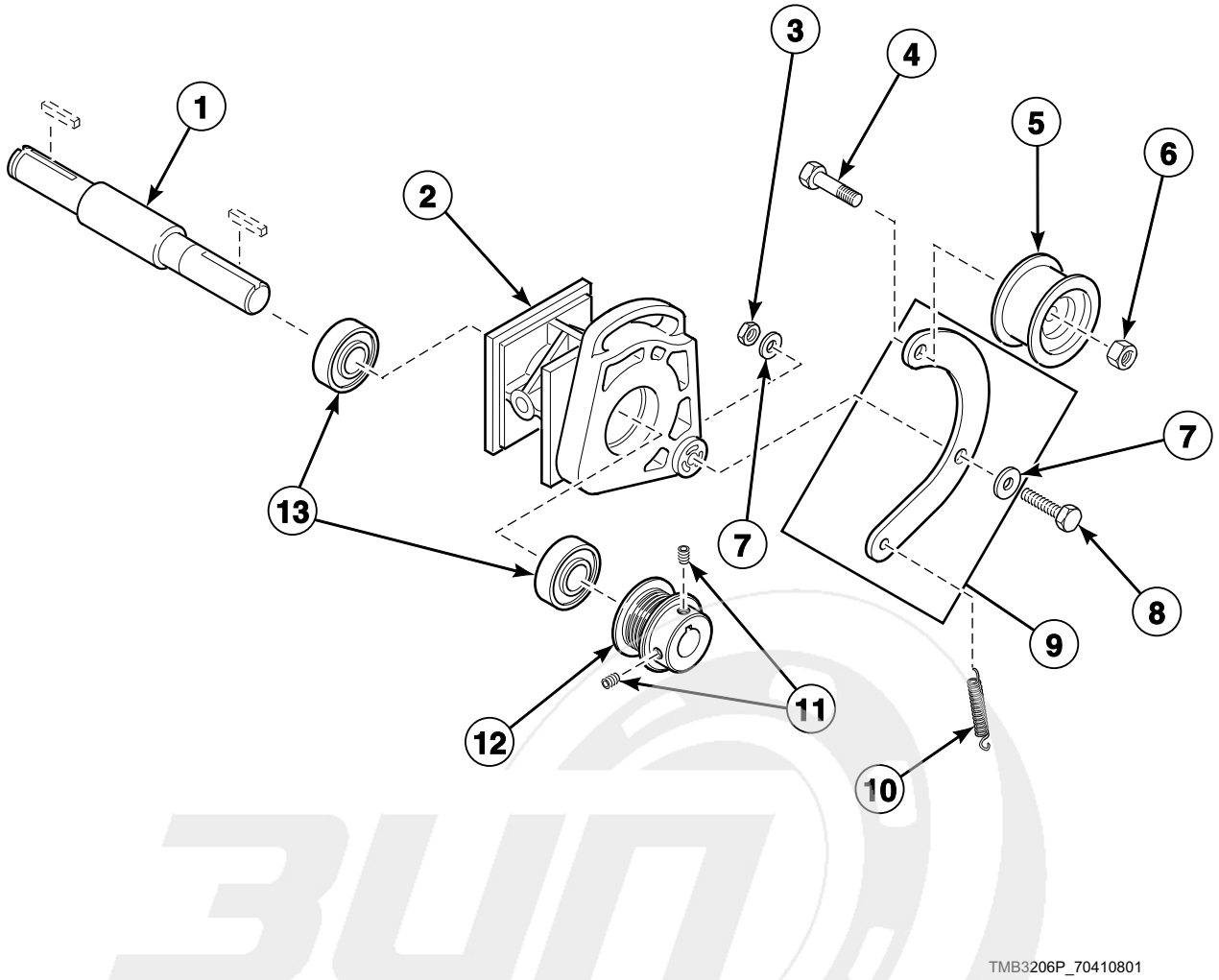

info@zipnasklade.ru
8(800)500-69-51

© Copyright, Alliance Laundry Systems LLC – DO NOT COPY or TRANSMIT

Idler Housing Assembly For Nonreversing Belt/Belt Drive

REF	PART NO.	DESCRIPTION	COMMENTS
1	M412223P	Idler Shaft	
2	943P3P	Idler Housing Kit	Includes Idler Pivot Plate, 44087201 Nut, 44102701 Idler Arm, 44107101 Idler Housing Assembly, 70265901 Washer, 70321501 Screw and M400056 Screw
3	52566	Nut	
4	430648	Screw	
5	430619	Drum Idler Wheel Assembly	
6	56156	Nut	
7	M405535	Washer	
8	M412119	Bolt	
9	M414320P	Idler Arm Kit	
10	M412120	Extension Spring	
11	M400077	Screw	
12	M411466P	Micro V Pulley	
13	70448701	Support Bearing	

info@zipnasklade.ru
8(800)500-69-51

© Copyright, Alliance Laundry Systems LLC – DO NOT COPY or TRANSMIT

Idler Drive Components For Belt/Chain Drive - Reversing Models

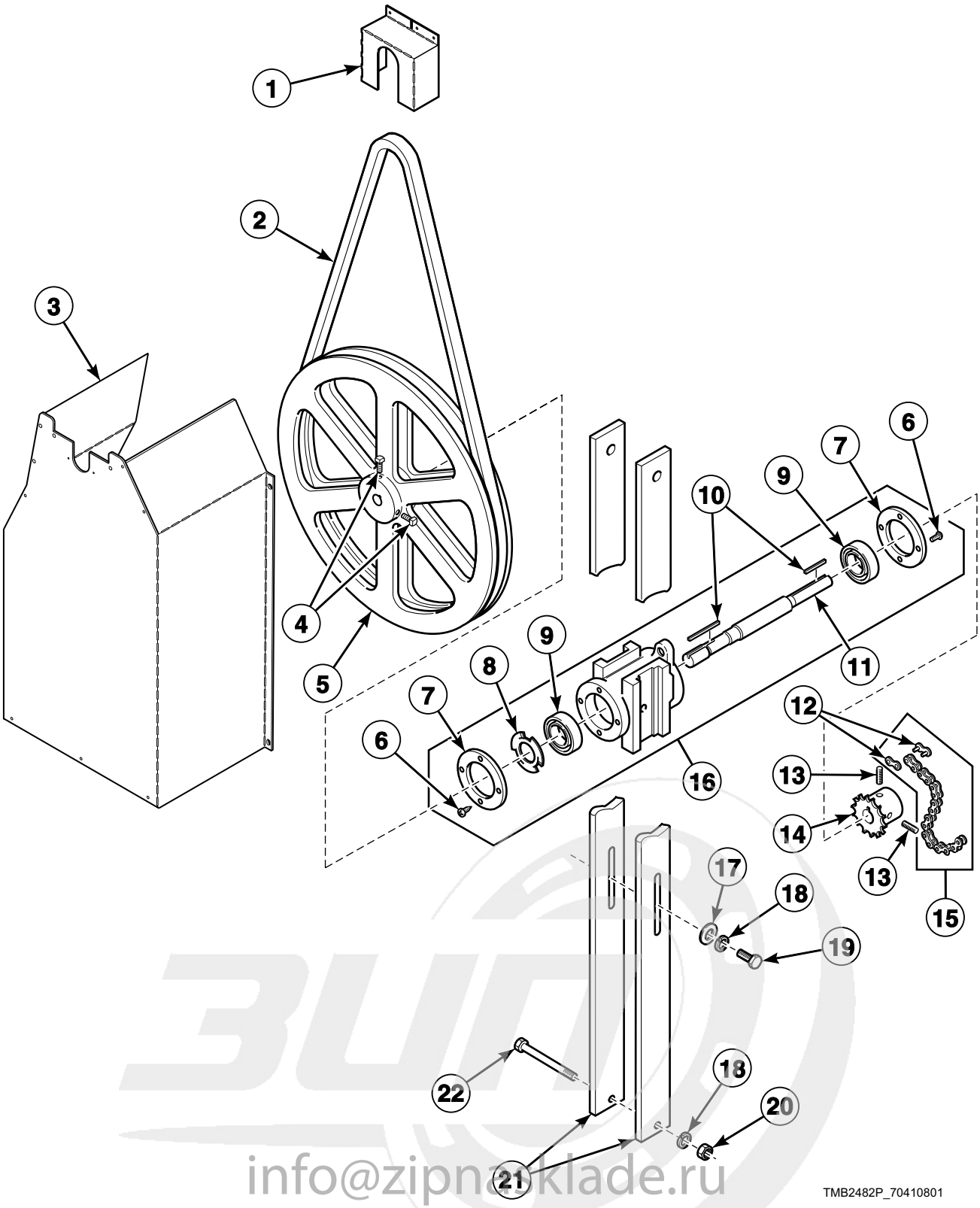

info@zipnaklade.ru
8(800)500-69-51

© Copyright, Alliance Laundry Systems LLC – DO NOT COPY or TRANSMIT

Idler Drive Components For Belt/Chain Drive - Reversing Models

REF	PART NO.	DESCRIPTION	COMMENTS
	BDK5075R	Belt Drive Conversion Kit	Use to convert belt/chain drive machine to belt/belt drive
1	M413541	Belt Guard	Upper
2	M411814P	Motor Belt	Motor pulley to sheave
3	44132402	Belt Guard Assembly	All models except EG
4	M400065	Screw	
5	M400147	Single Sheave	
6	M409385	Screw	
7	M401370	Bearing Retainer	
8	M400401	Loading Spring	
9	M401375P	Ball Bearing	
10	M401327	Key	
11	M401371	Idler Shaft	
12	N/A	Connector Link	
13	62541	Screw	
14	M401364P	Sprocket	
15	M400597P	Roller Chain	
16	917P3	Idler Housing Kit	Includes bearings and rails
17	M400081	Washer	
18	M400014	Washer	
19	M405525	Screw	
20	M400026	Nut	
21	M412476	Guide Rail	
22	M405525	Screw	

N/A = Part no longer available

info@zipnasklade.ru
8(800)500-69-51

© Copyright, Alliance Laundry Systems LLC – DO NOT COPY or TRANSMIT

Idler Drive Components For Belt/Belt Drive - Reversing Models

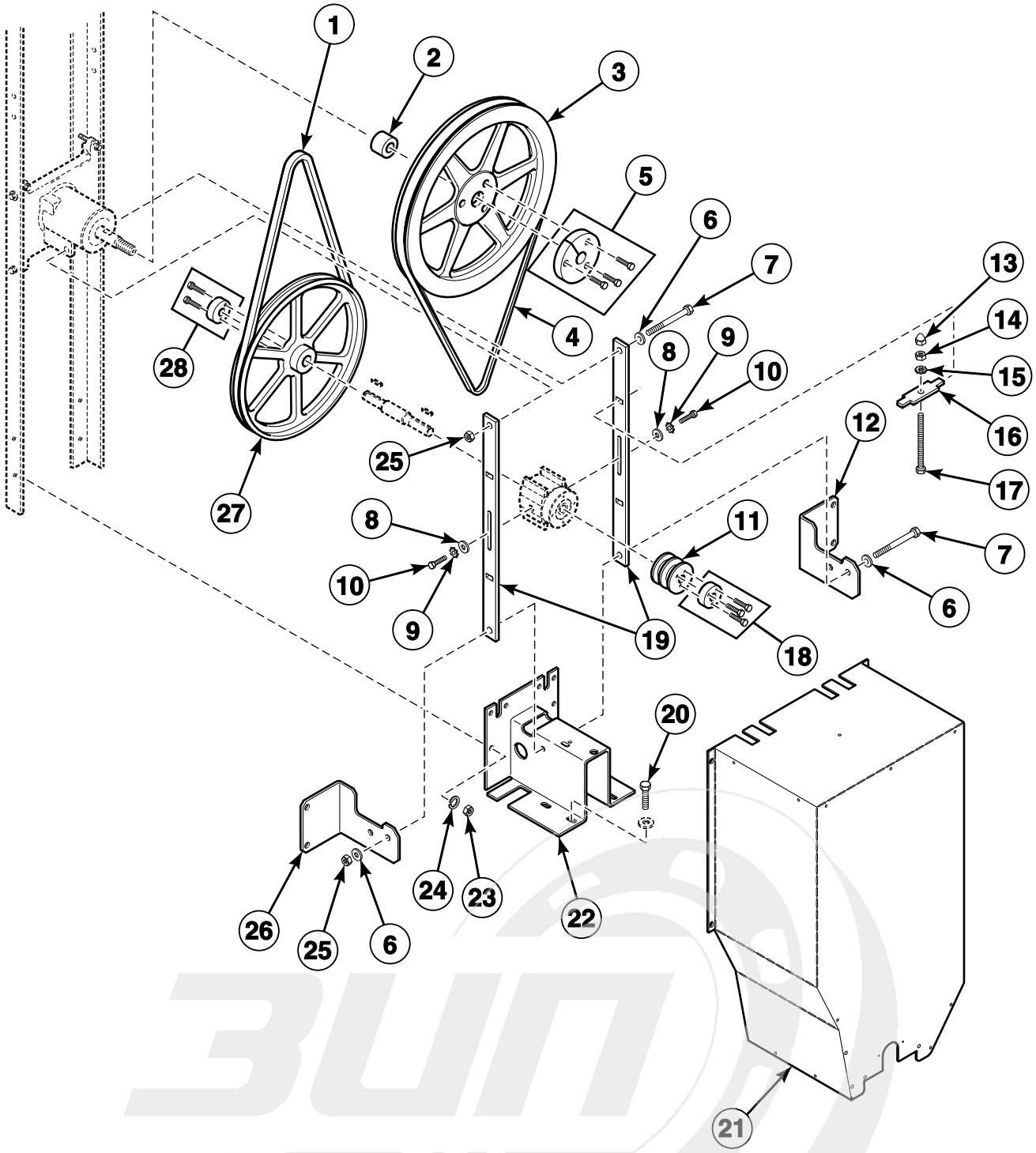

info@zipnasklade.ru
8(800)500-69-51

© Copyright, Alliance Laundry Systems LLC – DO NOT COPY or TRANSMIT

Idler Drive Components For Belt/Belt Drive - Reversing Models

REF	PART NO.	DESCRIPTION	COMMENTS
1	M412981	Belt	Motor to idler; Drive
2	44024001	Spacer	
3	M412916	Double V Sheave	
4	M412090	Belt	2 required; Cylinder
5	M412086P	Bushing	Includes screws
6	M400014	Washer	
7	430648	Screw	
8	M400080	Washer	
9	M403958	Washer	
10	M400043	Screw	
11	M412884	Pulley	
12	M413268	Guide Rail Support	Right; Models DTB634 and DTB75FG
13	M412626	Nut	
14	M404993	Nut	
15	M412188	Washer	
16	M414405	Tension Plate Assembly	
17	M412627	Screw	
18	M412917P	Bushing	Includes screws
19	M412476	Guide Rail	
20	M400057	Screw	
21	44132407	Belt Guard Assembly	Models DTB634 and DTB75FG; Models through Serial No. 0004xxxxx
	44132402	Belt Guard Assembly	All other models; Models through Serial No. 0004xxxxx
22	M411483	Motor Bracket	All models except FG
23	70142	Nut	
24	M400013	Washer	
25	M400026	Nut	
26	M413267	Guide Rail Support	Left; Models DTB634 and DTB75FG
27	M412931	Single V Sheave	Idler
28	M412885P	Bushing	Includes screws

info@zipnasklade.ru
8(800)500-69-51

© Copyright, Alliance Laundry Systems LLC – DO NOT COPY or TRANSMIT

Idler Housing Assembly for Reversing Belt/Belt Drive

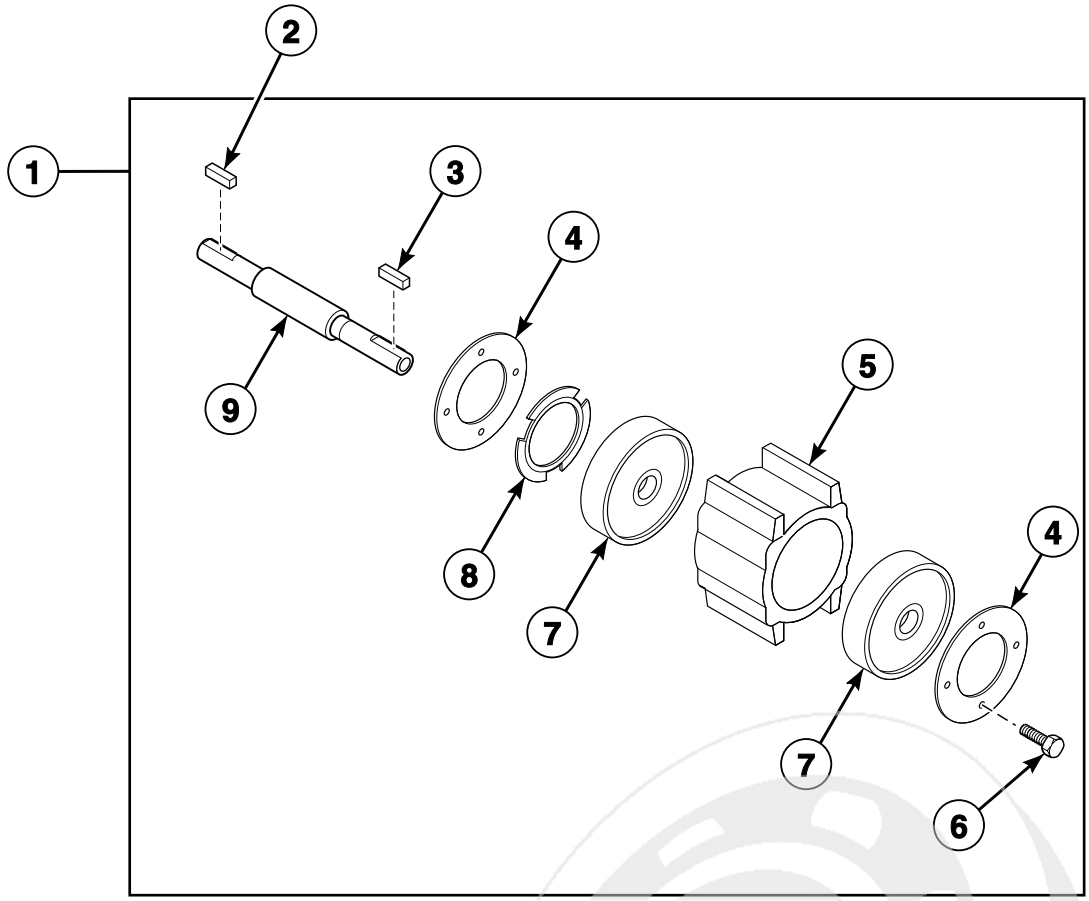

TMB2512P_70410801

info@zipnasklade.ru
8(800)500-69-51

© Copyright, Alliance Laundry Systems LLC – DO NOT COPY or TRANSMIT

Idler Housing Assembly for Reversing Belt/Belt Drive

REF	PART NO.	DESCRIPTION	COMMENTS
1	917P3	Idler Housing Kit	
2	M401327	Key	
3	M400993	Key	
4	M401370	Bearing Retainer	
5	M412612	Idler Housing	
6	M409385	Screw	
7	M401375P	Ball Bearing	
8	M400401	Loading Spring	
9	M414241	Idler Shaft	50 pound models
	M412099	Idler Shaft	75 pound models

info@zipnasklade.ru
8(800)500-69-51

© Copyright, Alliance Laundry Systems LLC – DO NOT COPY or TRANSMIT

Fan and Motor Components - All Models Except FG and 634

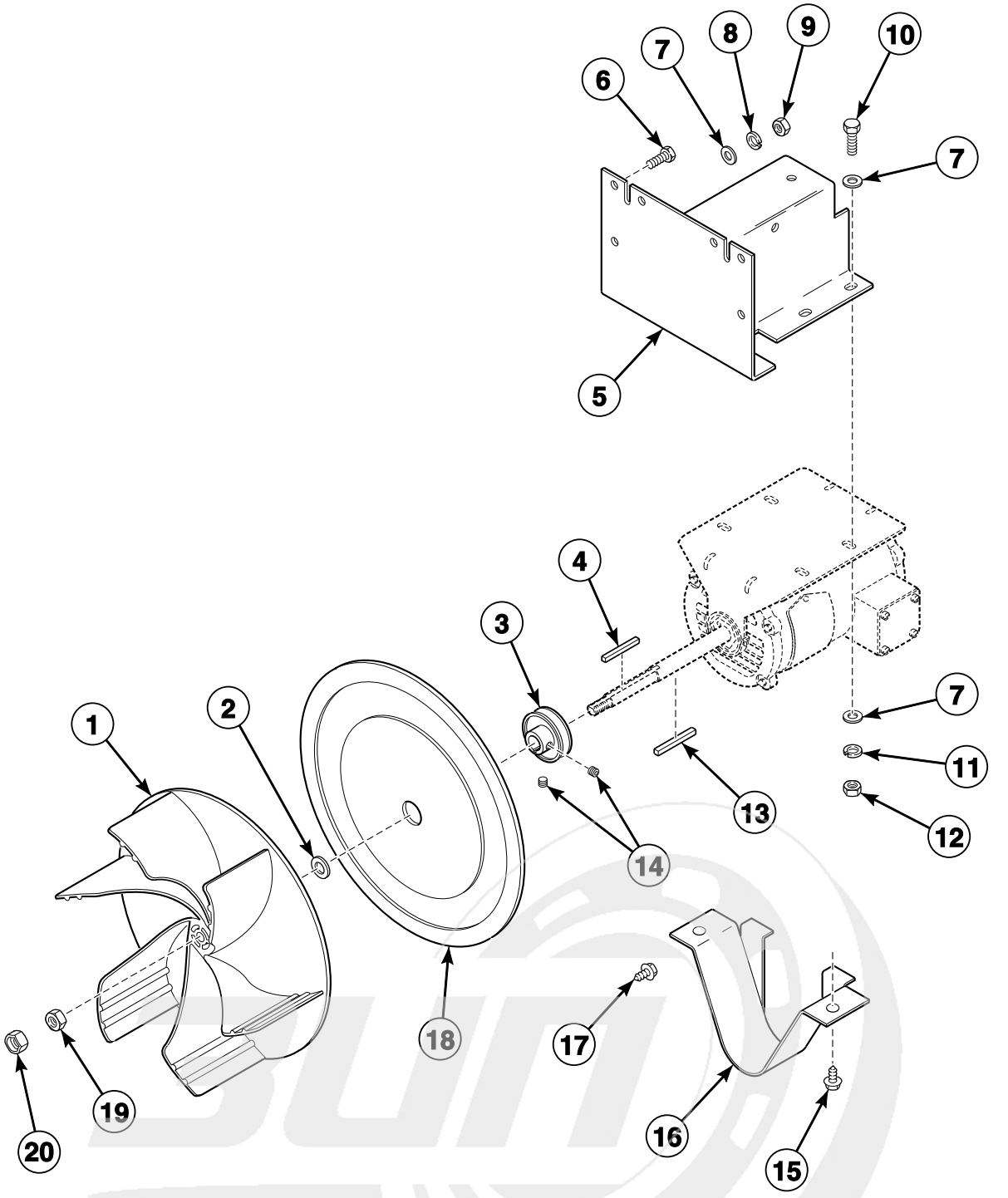

info@zipnasklade.ru
8(800)500-69-51

© Copyright, Alliance Laundry Systems LLC – DO NOT COPY or TRANSMIT

Fan and Motor Components - All Models Except FG and 634

REF	PART NO.	DESCRIPTION	COMMENTS
	M4426P3	Motor Hardware Kit	Includes items 2, 4, 13, 19 and 20
	M405419P	Motor Mounting Ring Kit	Standard connection motors; 2 per package
	M4525P3P	Resilient Ring Kit	Quick disconnect motors; 2 per package
1	M4936P3	Fan Kit	
2	M400991	Washer	
3	M414566	Pulley	Nonreversing; 50 Hertz
	M414564	Pulley	Nonreversing; 60 Hertz
4	M400994P	Key and Instruction Kit	Fan
5	M411483	Motor Bracket	
6	M401393	Bolt	
7	M400080	Washer	
8	M400014	Washer	
9	70142	Nut	
10	M400057	Screw	
11	M400013	Washer	
12	02428	Nut	
13	M400993	Key	Pulley
14	M400077	Screw	
15	M405188	Screw	
16	M413008	Belt Guard	
17	M410059	Screw	
18	M401362	Cover Plate	
19	M400022	Nut	
20	M400034	Nut	

info@zipnasklade.ru
8(800)500-69-51

© Copyright, Alliance Laundry Systems LLC – DO NOT COPY or TRANSMIT

Fan Motors with Standard Connection - 50 Pound Models Through Serial No. 684487YA

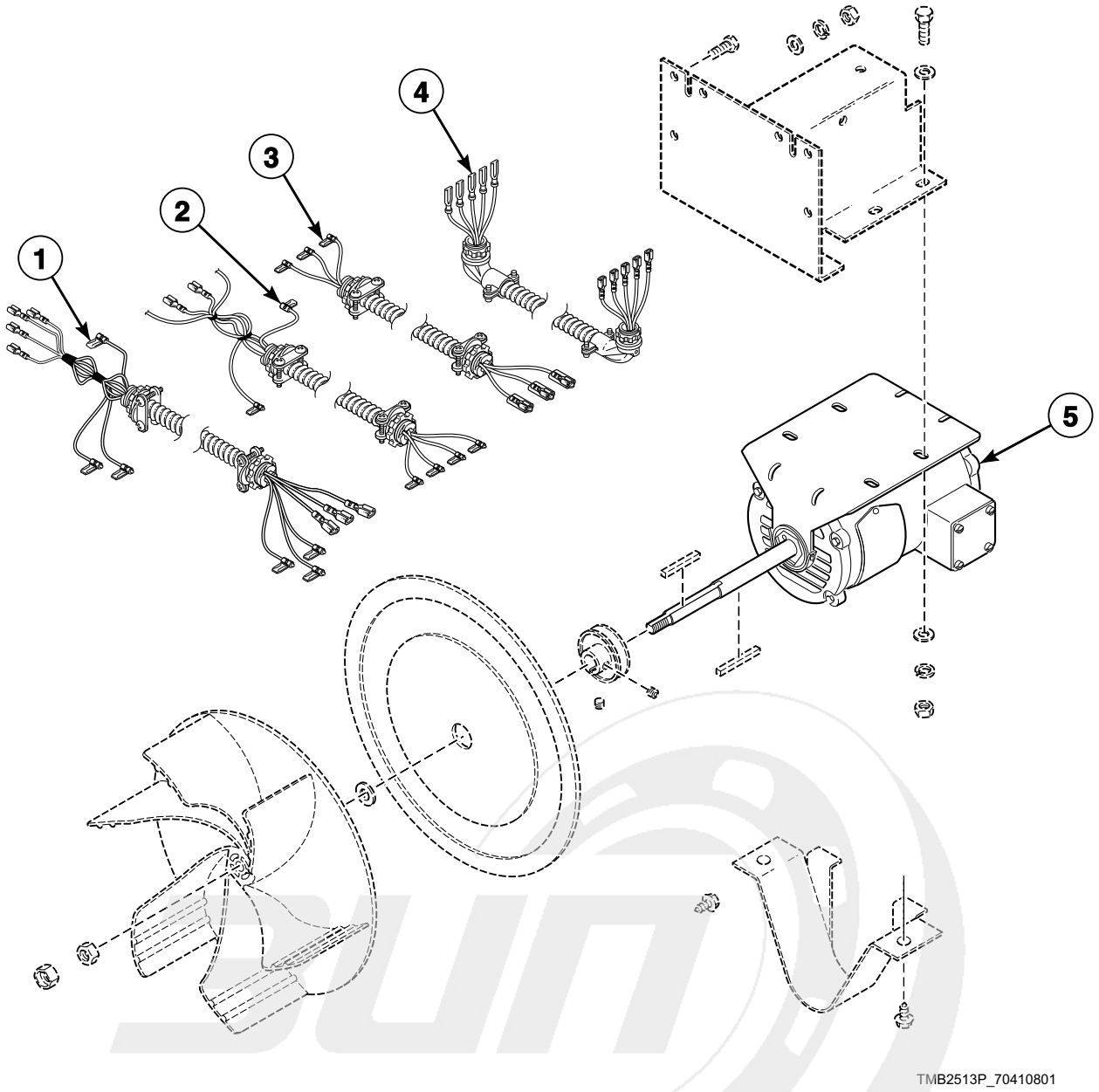

info@zipnasklade.ru
8(800)500-69-51

© Copyright, Alliance Laundry Systems LLC – DO NOT COPY or TRANSMIT

Fan Motors with Standard Connection - 50 Pound Models Through Serial No. 684487YA

REF	PART NO.	DESCRIPTION	COMMENTS
1	M411827	Motor Wire Harness Assembly	EG and electric models; Coin and manual timer; 3 Phase; Fan motor to junction box
	M411828	Motor Harness Assembly	EG models; Manual timer; 208-240 Volt/60 Hertz/3 Phase; Fan motor to junction box
2	M409489	Motor Wire Harness Assembly	EG models; Coin; 208-240 Volt/60 Hertz/1 Phase; Fan motor to junction box
	N/A	Motor Wire Harness Assembly	CG, CSH and CSL models; Coin and manual timer; 2 wire; 1 Phase; Fan motor to junction box
	M409982	Motor Wire Harness Assembly	Electric models; Coin; 415 Volt/50 Hertz/3 Phase; Fan motor to junction box
3	N/A	Fan Motor Harness Assembly	CG, CSH, CSL and electric models; OM control suffix; 120 Volt/60 Hertz/1 Phase and 240 Volt/50 Hertz/1 Phase; Fan motor to contactor box
	M413686	Fan Motor Harness Assembly	CG, CSH, CSL and electric models; OM control suffix; 3 Phase; Fan motor to contactor box
	N/A	Fan Motor Harness Assembly	CG, CSH, CSL and electric models; OM control suffix; 1 Phase; Fan motor to contactor box
	N/A	Motor Harness Assembly	CG models; Coin and manual timer; 208-240 Volt/60 Hertz/1 Phase; Fan motor to contactor box
4	M411980	Motor Harness Assembly	Reversing; CG, CSH and EG models; Manual timer; 240 Volt/50 Hertz/1 Phase; Fan motor to contactor box
5	M411189P	Motor	Reversing; Gas, steam and electric models: 208-240 Volt/60 Hertz/3 Phase and 380-415 Volt/50 Hertz/3 Phase; Steam and electric models: 480 Volt/60 Hertz/3 Phase; No capacitor
	M409735P	Motor	Reversing; Gas and electric models: 240 Volt/50 Hertz/1 or 3 Phase; Use M410301 Motor Capacitor
	M4857P3	Motor Replacement Kit	Reversing; Steam models: 240 Volt/50 Hertz/1 Phase; Use M410301 Motor Capacitor
	M4858P3	Motor Replacement Kit	Reversing; Gas models: 240 Volt/50 Hertz/1 Phase; Nonreversing; Gas, steam and electric models: 240 Volt/50 Hertz/1 Phase; Use M410300 Motor Capacitor
	M4834P3	Motor Replacement Kit	Nonreversing; Gas, steam and electric models: 208 Volt/60 Hertz/1 Phase; Steam models: 208-240 Volt/60 Hertz/3 Phase; Gas models: 120 Volt/60 Hertz/1 Phase and 208-240 Volt/60 Hertz/1 Phase; Gas and steam models: 240 Volt/60 Hertz/1 Phase; Electric models: 240 Volt/60 Hertz/3 Phase; Use 70211501 Motor Capacitor
	M411190P	Motor	Nonreversing; Gas and steam models: 208-240 Volt/60 Hertz/3 Phase; Electric models: 240 Volt/50 Hertz/3 Phase and 380-415 Volt/50 Hertz/3 Phase; Gas and electric models: 480 Volt/60 Hertz/3 Phase; No capacitor
	M411191P	Motor	Nonreversing; Steam models: 120 Volt/60 Hertz/1 Phase and 208-240 Volt/60 Hertz/1 Phase; Use M410298 Motor Capacitor

NOTE: Standard connection motors have wire leads which connect to the tumbler harness.
N/A = Part no longer available

info@zipnasklade.ru
8(800)500-69-51

© Copyright, Alliance Laundry Systems LLC – DO NOT COPY or TRANSMIT

Fan Motors with Quick Connect - 50 Pound Models
Starting Serial No. 684487YA

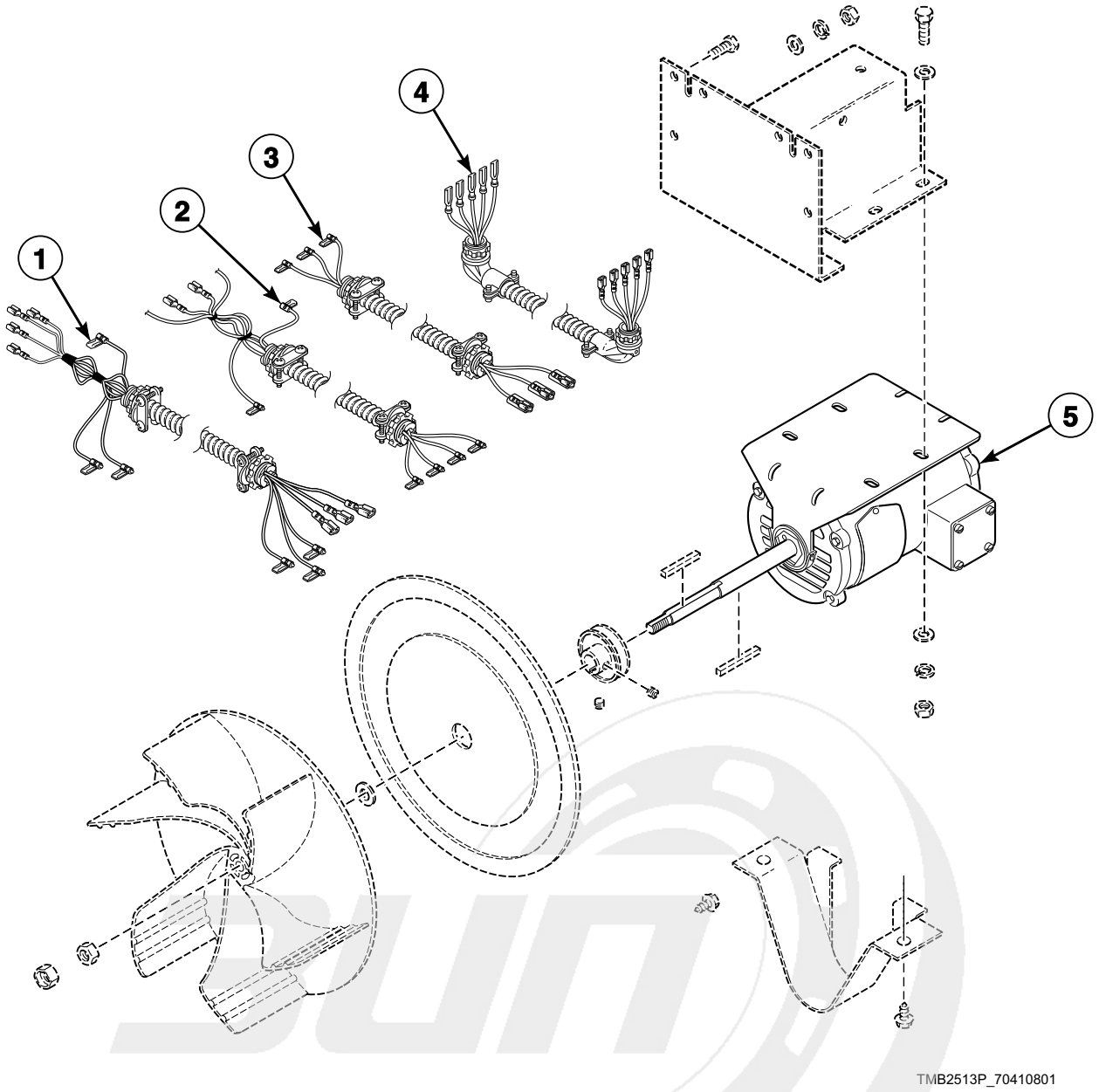

info@zipnasklade.ru
8(800)500-69-51

© Copyright, Alliance Laundry Systems LLC – DO NOT COPY or TRANSMIT

Fan Motors with Quick Connect - 50 Pound Models
Starting Serial No. 684487YA

REF	PART NO.	DESCRIPTION	COMMENTS
1	M411827	Motor Wire Harness Assembly	EG and electric models; Coin and manual timer; 3 Phase; Fan motor to junction box
	M411828	Motor Harness Assembly	EG models; Manual timer; 208-240 Volt/60 Hertz/3 Phase; Fan motor to junction box
2	M409489	Motor Wire Harness Assembly	EG models; Coin; 208-240 Volt/60 Hertz/1 Phase; Fan motor to junction box
	N/A	Motor Wire Harness Assembly	CG, CSH and CSL models; Coin and manual timer; 2 wire; 1 Phase; Fan motor to junction box
	M409982	Motor Wire Harness Assembly	Electric models; Coin; 415 Volt/50 Hertz/3 Phase; Fan motor to junction box
3	N/A	Fan Motor Harness Assembly	CG, CSH, CSL and electric models; OM control suffix; 120 Volt/60 Hertz/1 Phase and 240 Volt/50 Hertz/1 Phase; Fan motor to contactor box
	M413686	Fan Motor Harness Assembly	CG, CSH, CSL and electric models; OM control suffix; 3 Phase; Fan motor to contactor box
	N/A	Fan Motor Harness Assembly	CG, CSH, CSL and electric models; OM control suffix; 1 Phase; Fan motor to contactor box
	N/A	Motor Harness Assembly	CG models; Coin and manual timer; 208-240 Volt/60 Hertz/1 Phase; Fan motor to contactor box
4	M411980	Motor Harness Assembly	Reversing; CG, CSH and EG models; Manual timer; 240 Volt/50 Hertz/1 Phase; Fan motor to contactor box
5	M4833P3	Motor Replacement Kit	Reversing; Electric models: 208-240 Volt/60 Hertz/3 Phase; Use M410296 Motor Capacitor
	M409735P	Motor	Reversing; Electric models: 240 Volt/50 Hertz/3 Phase; Gas and steam models: 240 Volt/50 Hertz/1 Phase; Use M410301 Motor Capacitor
	44046001P	Fan Motor	Reversing; Gas and steam models: 208-240 Volt/60 Hertz/3 Phase; Gas, steam and electric models: 380-415 Volt/50 Hertz/3 Phase; Steam and electric models: 480 Volt/60 Hertz/3 Phase; No capacitor
	M4834P3	Motor Replacement Kit	Nonreversing; Gas models: 120 Volt/60 Hertz/1 Phase; Gas and steam models: 120, 208-240 Volt/60 Hertz/1 Phase; Electric models: 208-240 Volt/60 Hertz/3 Phase; Use 70211501 Motor Capacitor
	M412225P	Motor	Nonreversing; Gas, steam and electric models: 240 Volt/50 Hertz/1 Phase; Electric models: 240 Volt/50 Hertz/3 Phase and 380-415 Volt/50 Hertz/3 Phase; Use M410300 Motor Capacitor
	44046101P	Motor	Nonreversing; Gas and steam models: 208-240 Volt/60 Hertz/3 Phase; Steam models: 380-415 Volt/50 Hertz/3 Phase; Gas, steam and electric models: 480 Volt/60 Hertz/3 Phase; No capacitor
	44046201P	Motor	Nonreversing; Steam models: 208-240 Volt/60 Hertz/3 Phase; No capacitor

NOTE: Quick connect motors have terminal blocks for wire connections.
N/A = Part no longer available

info@zipnasklade.ru
8(800)500-69-51

© Copyright, Alliance Laundry Systems LLC – DO NOT COPY or TRANSMIT

Motor Components - 75 Pound Models Except FG and 634

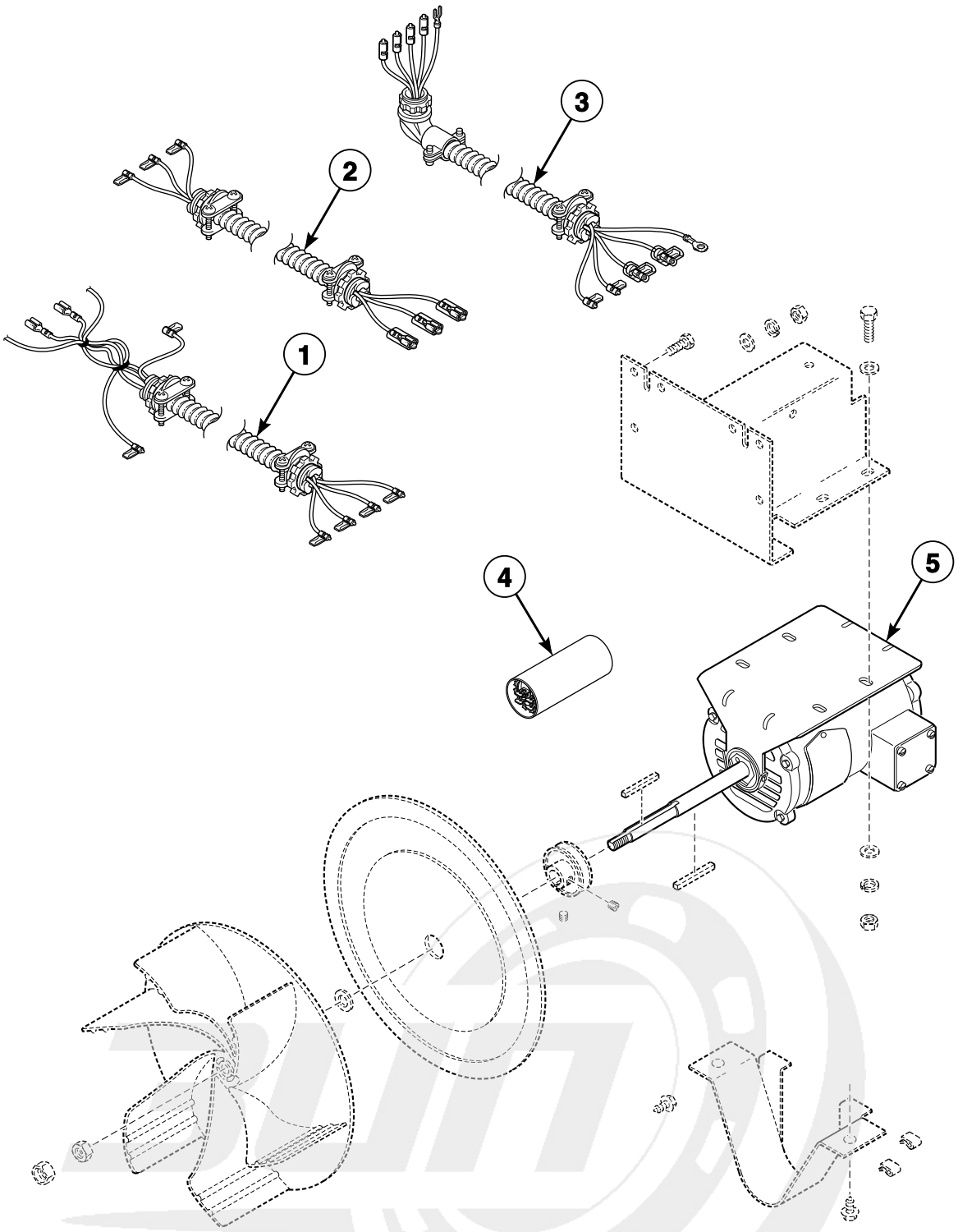

info@zipnasklade.ru
8(800)500-69-51

© Copyright, Alliance Laundry Systems LLC – DO NOT COPY or TRANSMIT

Motor Components - 75 Pound Models Except FG and 634

REF	PART NO.	DESCRIPTION	COMMENTS
1	M409489	Motor Wire Harness Assembly	Gas models; 1 Phase
	N/A	Motor Wire Harness Assembly	Gas and steam models; Manual timer; 1 Phase; 2 wire
2	N/A	Fan Motor Harness Assembly	120-240 Volt/50 or 60 Hertz/1 Phase; 2 wire
	M413686	Fan Motor Harness Assembly	OM control suffix; 3 Phase
	N/A	Fan Motor Harness Assembly	OM control suffix; 1 Phase; 3 wire
3	M413281	Fan Motor Harness Assembly	Gas and steam models; 230 Volt/50 Hertz/1 Phase
4	M406291	Motor Capacitor	Standard connection; For M400383 Motor which is no longer available. Order M4833P3 Motor Replacement Kit which includes terminals
	M410302	Motor Capacitor	Standard connection; For M400390 Motor which is no longer available. Order M4834P3 Motor Replacement Kit which includes terminals
	M410301	Motor Capacitor	Standard connection; For M409735 Motor and M400382 Motor which are no longer available. Order M4857P3 Motor Replacement Kit which includes terminals
	M410296	Motor Capacitor	Quick connect; For M409438 Motor which is included in M4833P3 Motor Replacement Kit
	M410298	Motor Capacitor	Quick connect; For M412227 Motor and M411191P Motor
	M410300	Motor Capacitor	Quick connect; For M412225 Motor
5	M411191P	Motor	Nonreversing models through Serial No. 684486YA; Gas and steam models: 120, 208 or 240 Volt/60 Hertz/1 Phase; Electric models: 208 or 240 Volt/60 Hertz/3 Phase Use M410298 Motor Capacitor
	M412226P	Motor	Nonreversing; Gas models: 208 Volt/50 Hertz/1 Phase; CSH models: 240 Volt/50 Hertz/1 Phase; Electric models: 380 or 415 Volt/50 Hertz/3 Phase No capacitor
	M411188P	Motor	Nonreversing models through Serial No. 684486YA; Gas and steam models: 208 or 240 Volt/60 Hertz/3 Phase; Gas and electric models: 480 Volt/60 Hertz/3 Phase No capacitor
	M412227P	Motor	Nonreversing models starting Serial No. 684486YA; Gas and steam models: 120, 208 or 240 Volt/60 Hertz/1 Phase; Electric models: 208 or 240 Volt/60 Hertz/3 Phase Use M410298 Motor Capacitor
	M409735P	Motor	Reversing; Gas and CSH models: 240 Volt/50 Hertz/1 Phase; Electric models: 240 Volt/50 Hertz/3 Phase Use M410301 Motor Capacitor
	M4833P3	Motor Replacement Kit	Reversing; Electric models: 208 Volt/60 Hertz/1 or 3 Phase and 240 Volt/60 Hertz/3 Phase; Use M410296 Motor Capacitor
	44046001P	Fan Motor	Reversing; Gas and steam models: 208 or 240 Volt/60 Hertz/3 Phase; Gas, electric and CSH models: 380 or 415 Volt/50 Hertz/3 Phase and 480 Volt/60 Hertz/3 Phase; No capacitor
	44046201P	Motor	Nonreversing models starting Serial No. 684486YA; 200-208, 240, 380, 400-415, 440 or 460-480 Volt/50 or 60 Hertz/3 Phase; No capacitor

N/A = Part no longer available

info@zipnasklade.ru
8(800)500-69-51

© Copyright, Alliance Laundry Systems LLC – DO NOT COPY or TRANSMIT

Fan and Motor Components - FG and 634 Models

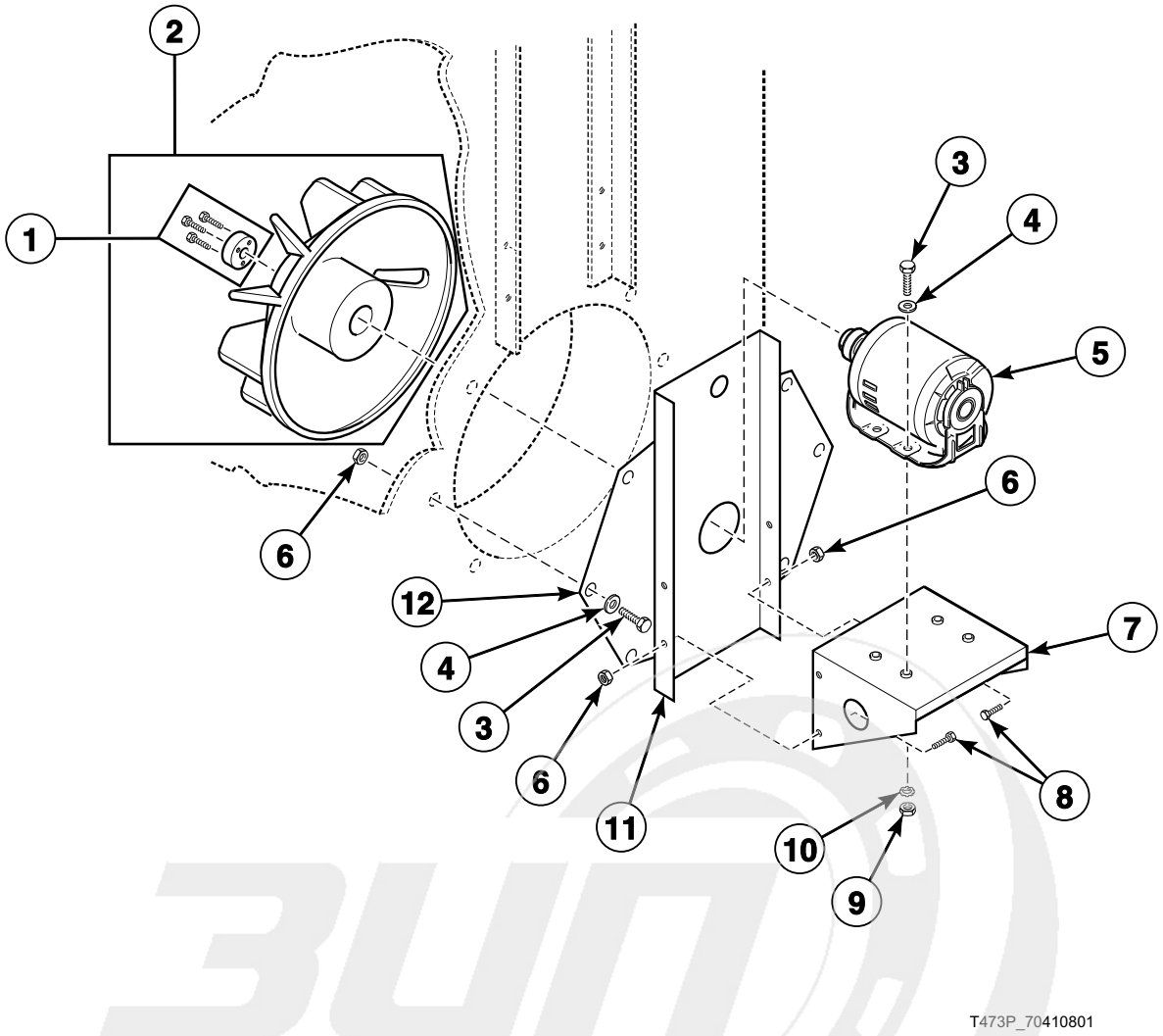

info@zipnasklade.ru
8(800)500-69-51

© Copyright, Alliance Laundry Systems LLC – DO NOT COPY or TRANSMIT

Fan and Motor Components - FG and 634 Models

REF	PART NO.	DESCRIPTION	COMMENTS
1	H87529111P	Bushing	Includes screws
2	M414546	Fan and Bushing Assembly	
3	M400057	Screw	
4	M400080	Washer	
5	44046301P	Motor	No capacitor
6	20274	Nut	
7	M413391	Motor Base	
8	22688	Screw	
9	02428	Nut	
10	M400013	Washer	
11	N/A	Motor Channel	
12	M413399	Blower Cover	

N/A = Part no longer available

info@zipnasklade.ru
8(800)500-69-51

© Copyright, Alliance Laundry Systems LLC – DO NOT COPY or TRANSMIT

Cylinder Drive Motor and Components for Models Through 1996

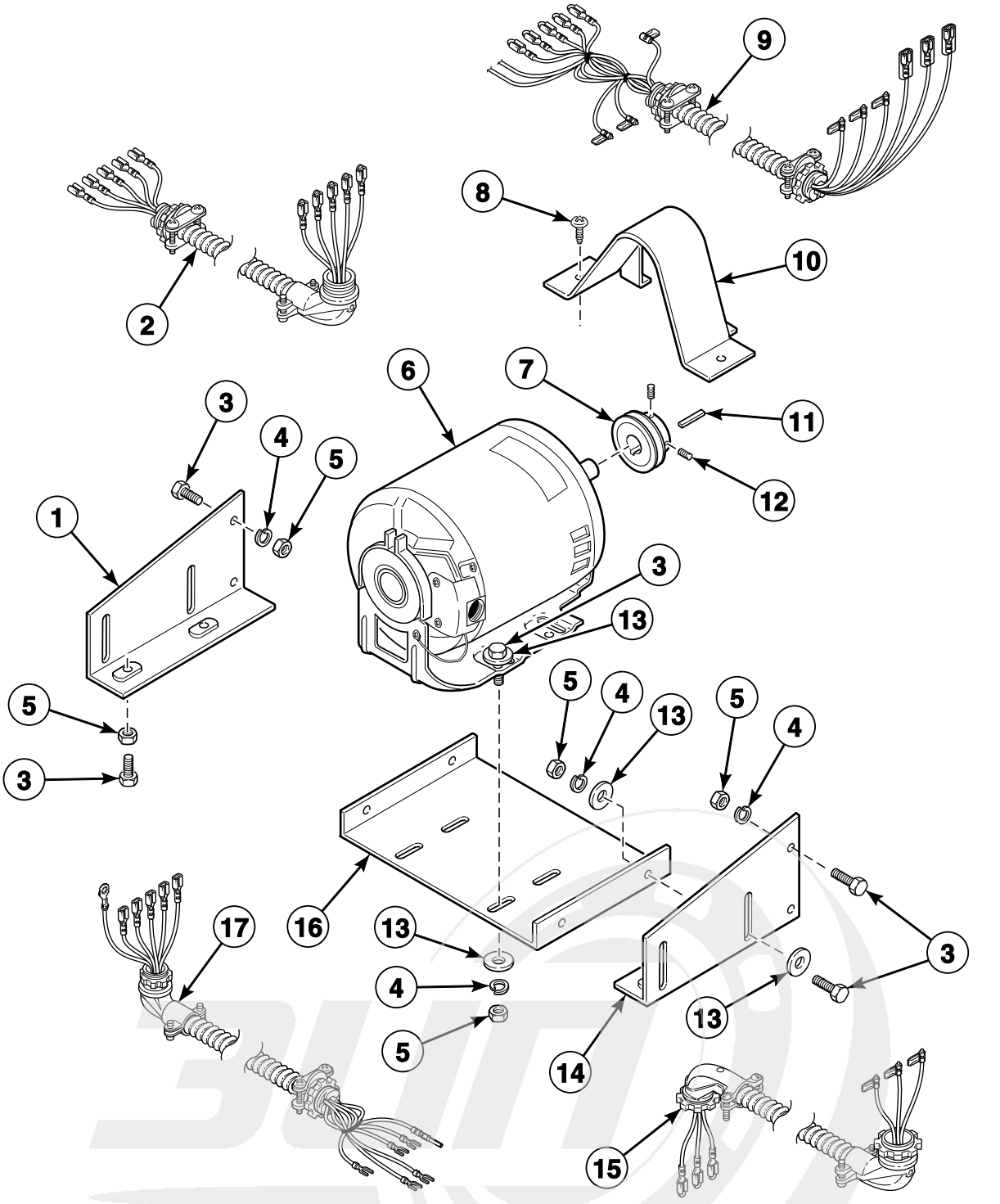

info@zipnasklade.ru
8(800)500-69-51

© Copyright, Alliance Laundry Systems LLC – DO NOT COPY or TRANSMIT

Cylinder Drive Motor and Components for Models Through 1996

REF	PART NO.	DESCRIPTION	COMMENTS
1	M400520	Motor Bracket Assembly	Left; 50 pound models through 1994; 75 pound models through 1995
2	M412107	Motor Harness Assembly	CG, CSH, CSL and electric models; Reversing; 50 or 60 Hertz/3 Phase; Drive motor to contactor box
	M413687	Cylinder Motor Harness Assembly	CG, CSH, CSL, EG and electric models; Reversing; OM control suffix; 1 Phase
3	M400057	Screw	
4	M400013	Washer	
5	02428	Nut	
6	M410852	Motor	75 pound models: 1/3 hp; 208-240 Volt/60 Hertz/1 Phase; No capacitor
	M412519P	Motor Kit	1/3 hp; Gas, steam and electric models: 208-240 Volt/60 Hertz/3 Phase; Electric models: 240 Volt/50 Hertz/3 Phase; Steam and electric models: 480 Volt/60 Hertz/3 Phase; No capacitor
	M412520P	Motor Kit	1/3 hp; 240 Volt/50 Hertz/1 Phase; No capacitor
7	M414565	Pulley	
8	M405188	Screw	
9	M411828	Motor Harness Assembly	Gas models; Manual timer; 208-240 Volt/60 Hertz/3 Phase
	M411827	Motor Wire Harness Assembly	Gas and electric models; Manual timer; 3 Phase
10	M413008	Belt Guard	
11	M400993	Key	
12	M400065	Screw	
13	M400080	Washer	
14	M400521	Motor Bracket Assembly	Right; 50 pound models through 1994; 75 pound models through 1995
15	M413688	Cylinder Motor Harness Assembly	Reversing; OM control suffix; 3 Phase
16	N/A	Motor Mounting Bracket	50 pound models through 1994; 75 pound models through 1995
	M413617	Motor Mount Assembly	Hinged; Models starting 1995
17	M412745	Cylinder Motor Harness	Reversing; DC, JC and SC gas and steam models; 230 Volt/50 Hertz/1 Phase
	M412573	Cylinder Motor Harness Assembly	Reversing; 3 Phase

N/A = Part no longer available

info@zipnasklade.ru
8(800)500-69-51

© Copyright, Alliance Laundry Systems LLC – DO NOT COPY or TRANSMIT

Cylinder Drive Motor and Components for Models Starting 1996

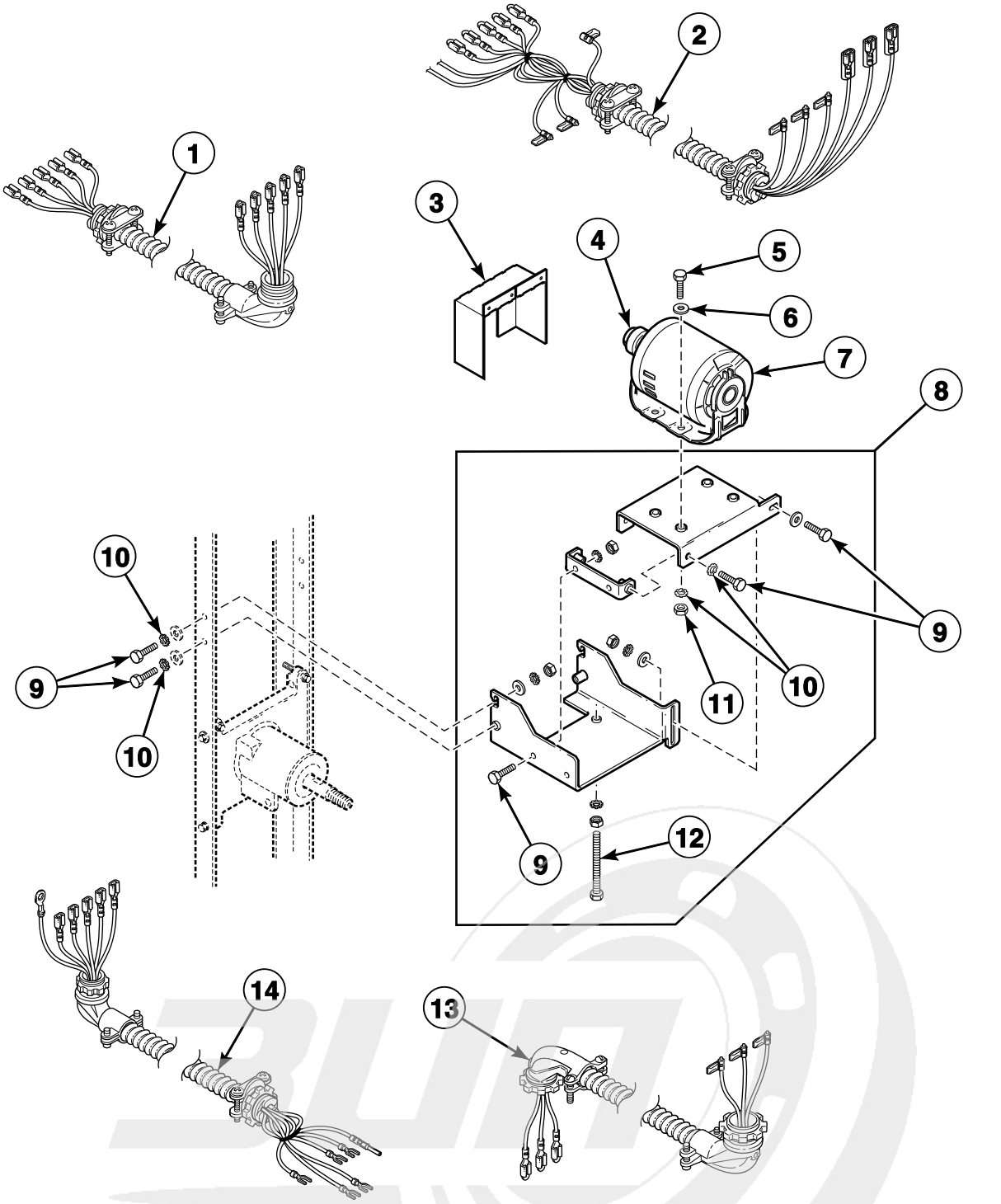

TMB2486P_70410801

info@zipnasklade.ru
8(800)500-69-51

© Copyright, Alliance Laundry Systems LLC – DO NOT COPY or TRANSMIT

Cylinder Drive Motor and Components for Models Starting 1996

REF	PART NO.	DESCRIPTION	COMMENTS
1	M412107	Motor Harness Assembly	Reversing; 50 or 60 Hertz/3 Phase; Drive motor to contactor box
	M413687	Cylinder Motor Harness Assembly	CG, CSH, CSL and electric models; Reversing; OM control suffix; 1 Phase
2	M411828	Motor Harness Assembly	Gas models; Manual timer; 208-240 Volt/60 Hertz/3 Phase
	M411827	Motor Wire Harness Assembly	Gas and electric models; Manual timer; 3 Phase
3	M413541	Belt Guard	Upper
4	M414565	Pulley	60 Hertz
	M414567	Pulley	50 Hertz
5	M400057	Screw	
6	M400080	Washer	
7	M412519P	Motor Kit	Gas, steam and electric models: 208-240 Volt/60 Hertz/3 Phase and 380-415 Volt/50 Hertz/3 Phase; Electric models: 240 Volt/50 Hertz/3 Phase; Steam and electric models: 480 Volt/60 Hertz/3 Phase; No capacitor
	M412520P	Motor Kit	Gas and steam models: 240 Volt/1 Phase; No capacitor
8	M413617	Motor Mount Assembly	Includes items 5, 6 and 10-12
9	27202	Screw	
10	02834	Washer	
11	02428	Nut	
12	M413565	Screw	
13	M413688	Cylinder Motor Harness Assembly	CG, CSH, CSL and electric models; Reversing; OM control suffix; 3 Phase
14	M412745	Cylinder Motor Harness	Reversing; DC, JC and SC gas and steam models; 230 Volt/50 Hertz/1 Phase
	M412573	Cylinder Motor Harness Assembly	Reversing; 3 Phase

info@zipnasklade.ru
8(800)500-69-51

© Copyright, Alliance Laundry Systems LLC – DO NOT COPY or TRANSMIT

Cylinder Motor Bracket - Models Through 1995

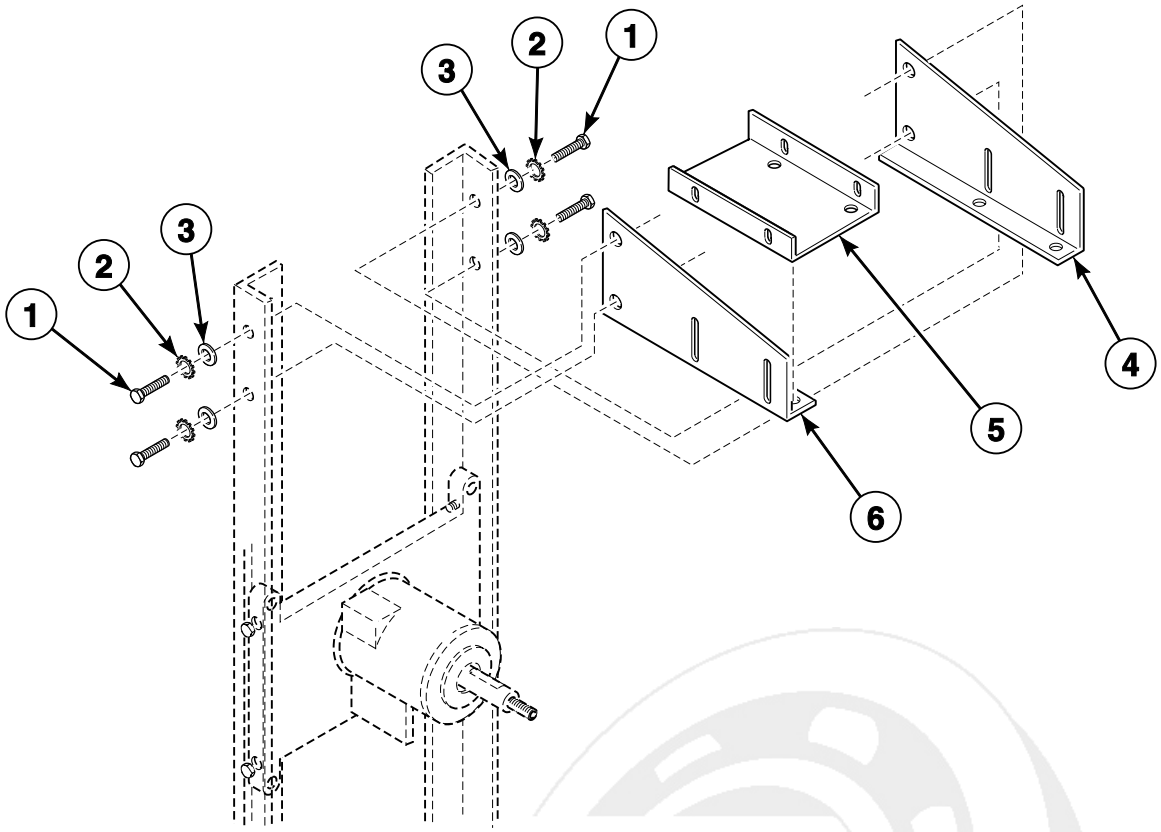

info@zipnasklade.ru
8(800)500-69-51

T503P_70410801

© Copyright, Alliance Laundry Systems LLC – DO NOT COPY or TRANSMIT

Cylinder Motor Bracket - Models Through 1995

REF	PART NO.	DESCRIPTION	COMMENTS
1	27202	Screw	
2	M400013	Washer	
3	M400080	Washer	
4	N/A	Motor Support Bracket Assembly	Right
5	N/A	Motor Mounting Bracket Assembly	
6	N/A	Motor Support Bracket Assembly	Left

N/A = Part no longer available

info@zipnasklade.ru
8(800)500-69-51

© Copyright, Alliance Laundry Systems LLC – DO NOT COPY or TRANSMIT

Airflow Switch Assembly

All 50 Pound Models
75 Pound Gas and Electric Models

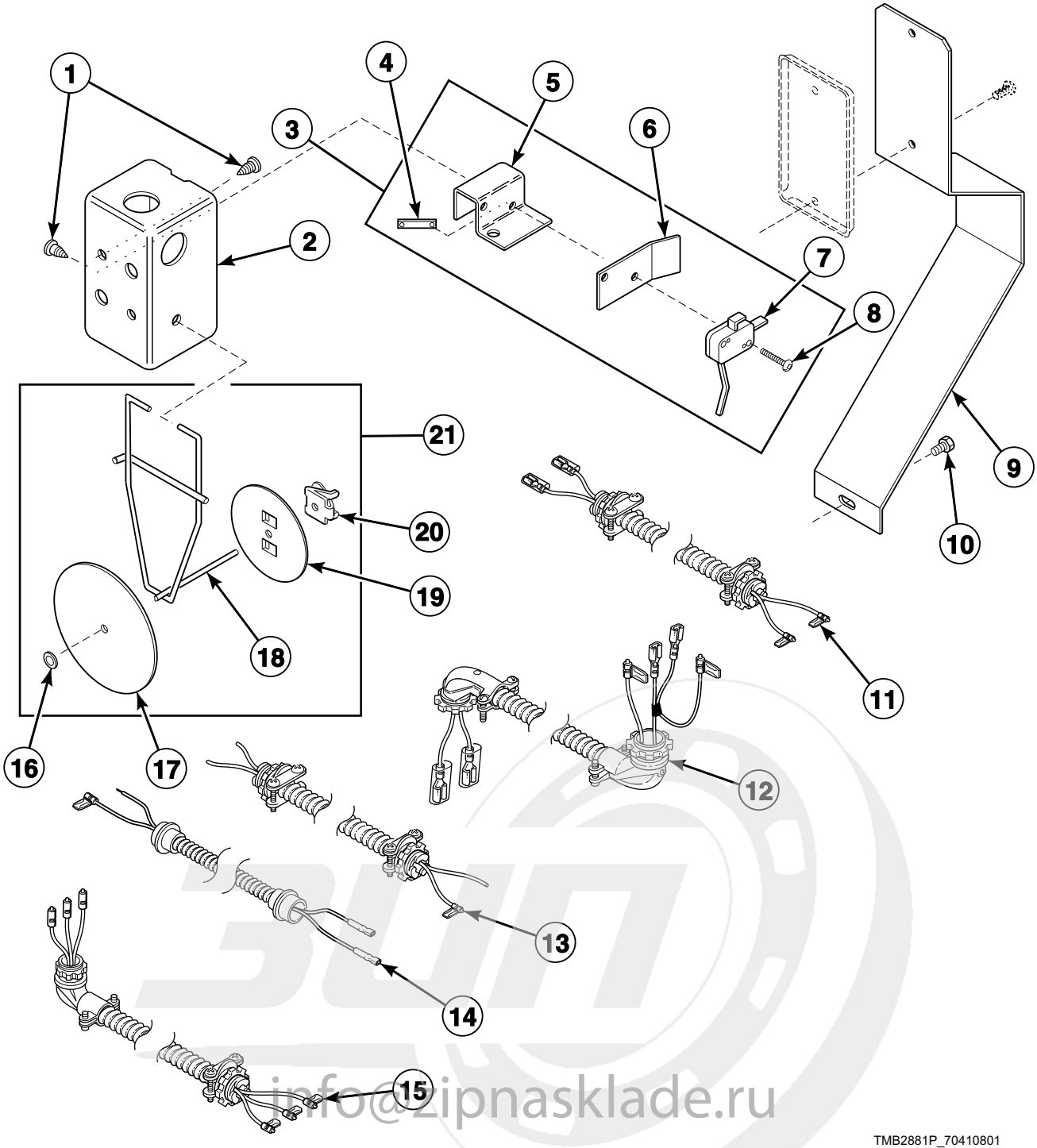

info@zipnasklade.ru
8(800)500-69-51

© Copyright, Alliance Laundry Systems LLC – DO NOT COPY or TRANSMIT

Airflow Switch Assembly

REF	PART NO.	DESCRIPTION	COMMENTS
1	M400664	Screw	
2	M403235	Airflow Switch Handy Box	
3	M401883	Airflow Switch Assembly	Includes items 4-8
4	M400979	Nut	
5	M409202	Airflow Switch Bracket	
6	M400712	Airflow Switch Insulator Barrier	
7	M400944	Airflow Switch	Australian and A, DT, JT and ST models
	M412423	Actuator Switch	DC, JC and SC models
8	M401938	Screw	
9	M410544	Airflow Switch Guard	All models except 50CG models
10	430497	Screw	
11	M413689	Airflow Switch Harness Assembly	Electric models; OM control suffix; Airflow switch to cabinet high limit thermostat
12	M413690	Harness Assembly	50 pound CG models; OM control suffix; Airflow switch to cabinet high limit thermostat
13	M401909	Wire Harness Assembly	50 pound CG models; Coin and manual timer; Airflow switch to junction box
14	M403824	Wire Harness Assembly	50 pound CG models; Coin and manual timer; Airflow switch to stove high limit thermostat
15	M412575	Airflow Switch Harness Assembly	75 pound DC, JC and SC models; Cabinet mounted airflow switch
16	M400977	Nut	
17	M413475	Airflow Switch Vane	634 and FG models
	M400253	Vane	All other models
18	M400753	Airflow Switch Vane Lever	
19	M400822	Counterweight	
20	M400976	Clip	
21	M400541	Vane Assembly	

info@zipnasklade.ru
8(800)500-69-51

© Copyright, Alliance Laundry Systems LLC – DO NOT COPY or TRANSMIT

Standing Pilot Ignition Burner Assembly - 50 Pound Models

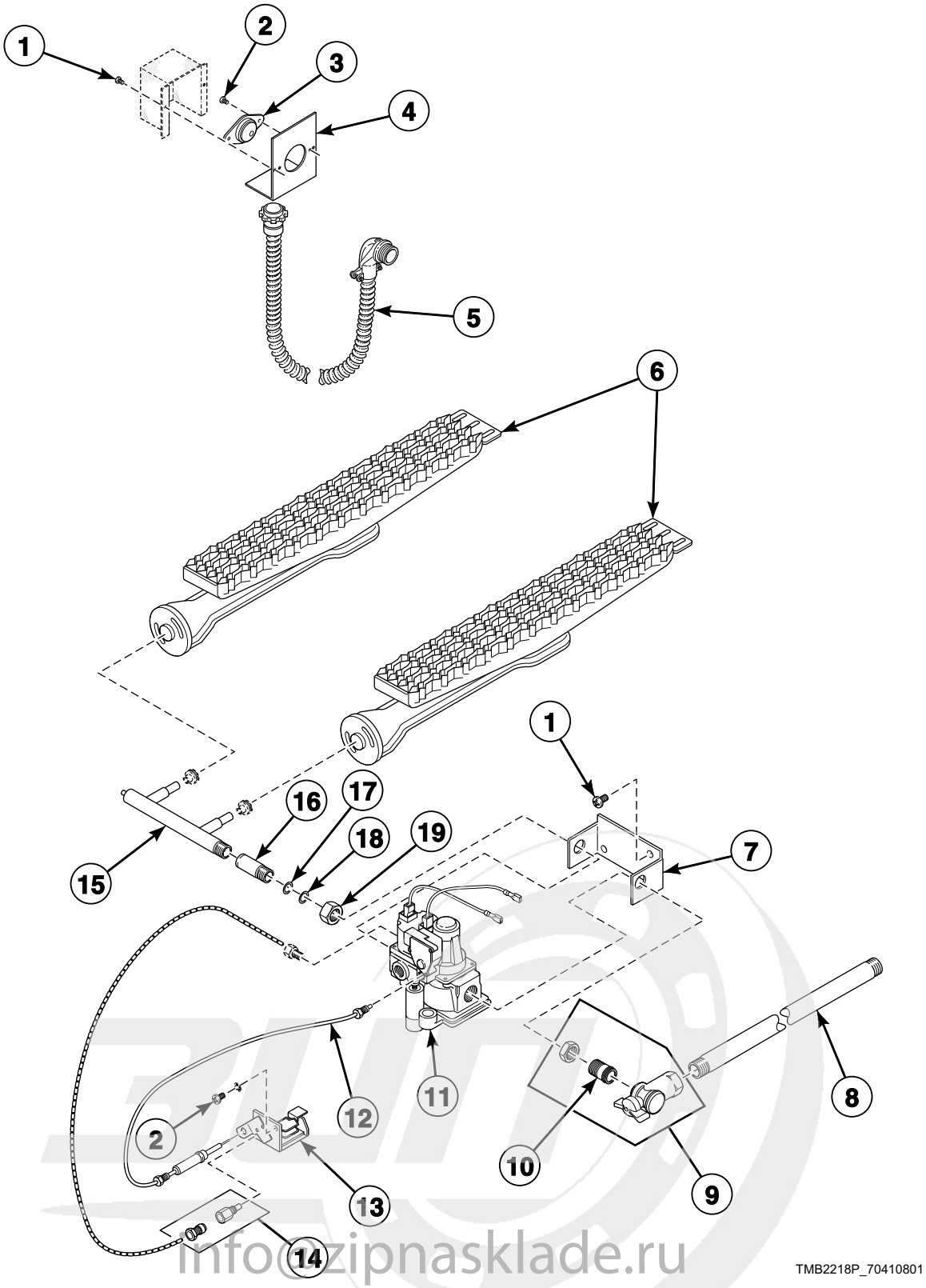

info@zipnasklade.ru
8(800)500-69-51

© Copyright, Alliance Laundry Systems LLC – DO NOT COPY or TRANSMIT

Standing Pilot Ignition Burner Assembly - 50 Pound Models

REF	PART NO.	DESCRIPTION	COMMENTS
1	M400664	Screw	
2	M402797	Screw	
3	M409433	Limit Thermostat	
4	M402798	Thermostat Bracket	
5	M403824	Wire Harness Assembly	Models with junction box
	N/A	Wire Harness Assembly	Models without junction box
6	M4448P3	Burner Kit	Includes both burners
7	N/A	Bracket	
8	M400749	Pipe	
9	M4983P3	Shut-Off Valve Kit	
10	44092201	Tailpiece	1/2 inch NPT
	44092202	Tailpiece	1/2 inch BPT
11	M401228P	Gas Valve	Basotrol; 120 Volt; Natural Gas (N.G.); Regulated
	M401229P	Gas Valve	Basotrol; 240 Volt; N.G.; Regulated
	M401230P	Gas Valve	Basotrol; 120 Volt; Liquid Petroleum Gas (L.P.); Unregulated
	M401231P	Gas Valve	Basotrol; 240 Volt; L.P.; Unregulated
12	M400934	Thermocouple	
13	N/A	Pilot Holder Assembly	
14	M400918	Burner Orifice	L.P.
	Q8152	Burner Orifice	N.G.
15	N/A	Manifold	
16	M406681	Manifold Pipe Assembly	
17	M400606	Washer	
18	M400605	Anti-Torque Ring	
19	M401548	Nut	

N/A = Part no longer available

info@zipnasklade.ru
8(800)500-69-51

© Copyright, Alliance Laundry Systems LLC – DO NOT COPY or TRANSMIT

Standing Pilot Ignition Gas Valve Components

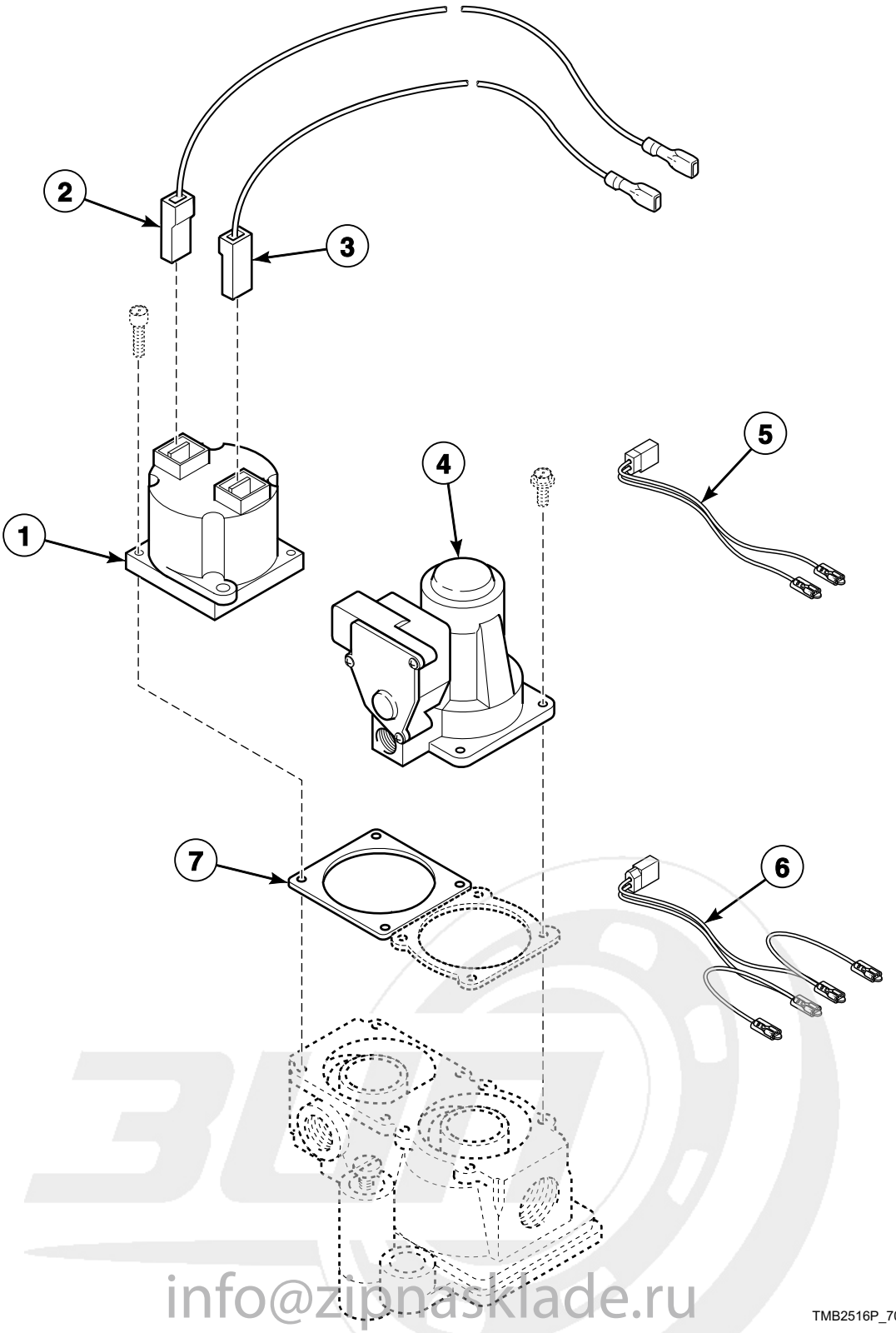

TMB2516P_70410801

info@zipnasklade.ru
8(800)500-69-51

© Copyright, Alliance Laundry Systems LLC – DO NOT COPY or TRANSMIT

Standing Pilot Ignition Gas Valve Components

REF	PART NO.	DESCRIPTION	COMMENTS
1	M400331P	Operator	Magnetic; 240 Volt
	M406217P	Magnetic Operator	120 Volt; Includes gasket
2	M400337	Jumper Wire	50 pound models
3	N/A	Jumper Wire	50 pound models
4	M400329P	Reset Assembly	Basotrol
5	M412997	Harness Assembly	CG models; OM control suffix
6	M413650	Gas Valve Harness Assembly	CG models; OM control suffix; Reversing and nonreversing; Australia
7	M400798	Gasket	

N/A = Part no longer available

info@zipnasklade.ru
8(800)500-69-51

© Copyright, Alliance Laundry Systems LLC – DO NOT COPY or TRANSMIT

Automatic Pilot Ignition Burner Assembly - 50 Pound Models

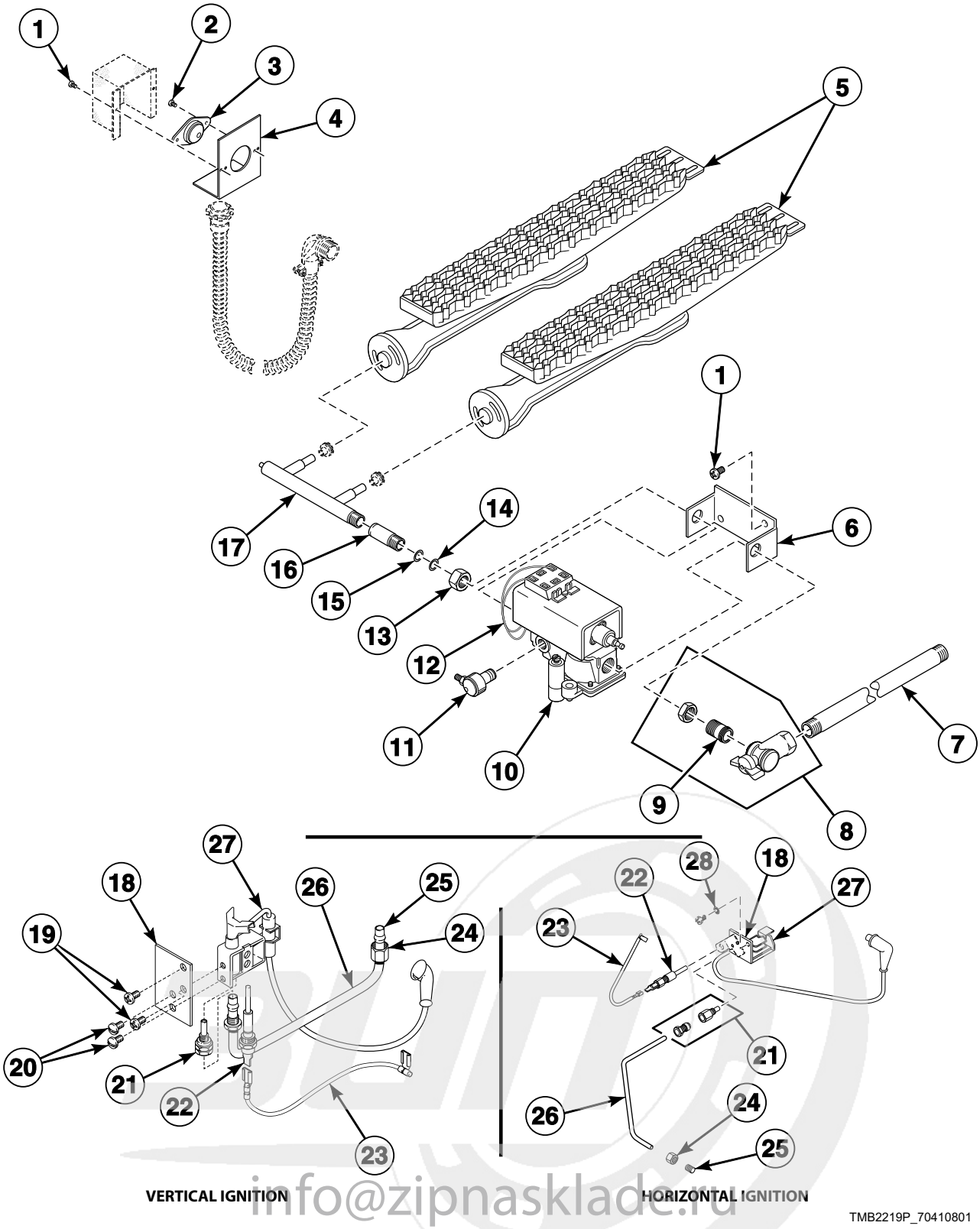

info@zipnasklade.ru
8(800)500-69-51

© Copyright, Alliance Laundry Systems LLC – DO NOT COPY or TRANSMIT

Automatic Pilot Ignition Burner Assembly - 50 Pound Models

REF	PART NO.	DESCRIPTION	COMMENTS
	M4337P3	Igniter Kit	Liquid Petroleum Gas (L.P.); Includes items 18-21 and 23-27
	M4338P3	Igniter Kit	Natural Gas (N.G.); Includes items 18-21 and 23-27
1	M400664	Screw	
2	M402797	Screw	
3	M401404	Limit Thermostat	
4	M402798	Thermostat Bracket	
5	M4448P3	Burner Kit	Includes both burners
6	N/A	Bracket	
7	M400749	Pipe	
8	M4983P3	Shut-Off Valve Kit	
9	44092201	Tailpiece	1/2 inch NPT
	44092202	Tailpiece	1/2 inch BPT
10	M401224P	Gas Valve	N.G.; Regulated
	M401225P	Gas Valve Kit	L.P.; Unregulated
11	N/A	Pilot Filter	
12	M410011P	Pilot Ignition Control	Blue box
	M4385P3	Remote Igniter Kit	To replace gray box
13	M401548	Nut	
14	M400606	Washer	
15	M400605	Anti-Torque Ring	
16	M406681	Manifold Pipe Assembly	
17	N/A	Manifold	
18	M402594	Ignition Bracket	
19	M409385	Screw	
20	N/A	Screw	
21	M402598	Burner Orifice	L.P.
	M402701	Burner Orifice	N.G.
22	M401209P	Sensor Probe	
23	M402597	Wire Lead	
24	M400926	Nut	
25	M400925	Sleeve	Compression
26	M402596	Pilot Tubing	
27	M402591P	Pilot Electrode	
28	03815	Washer	

N/A = Part no longer available

info@zipnasklade.ru
8(800)500-69-51

© Copyright, Alliance Laundry Systems LLC – DO NOT COPY or TRANSMIT

Glow Bar Ignition Burner Assembly - 50 Pound Models Starting Jan 1982 (PA) Through Aug 1982 (PH)

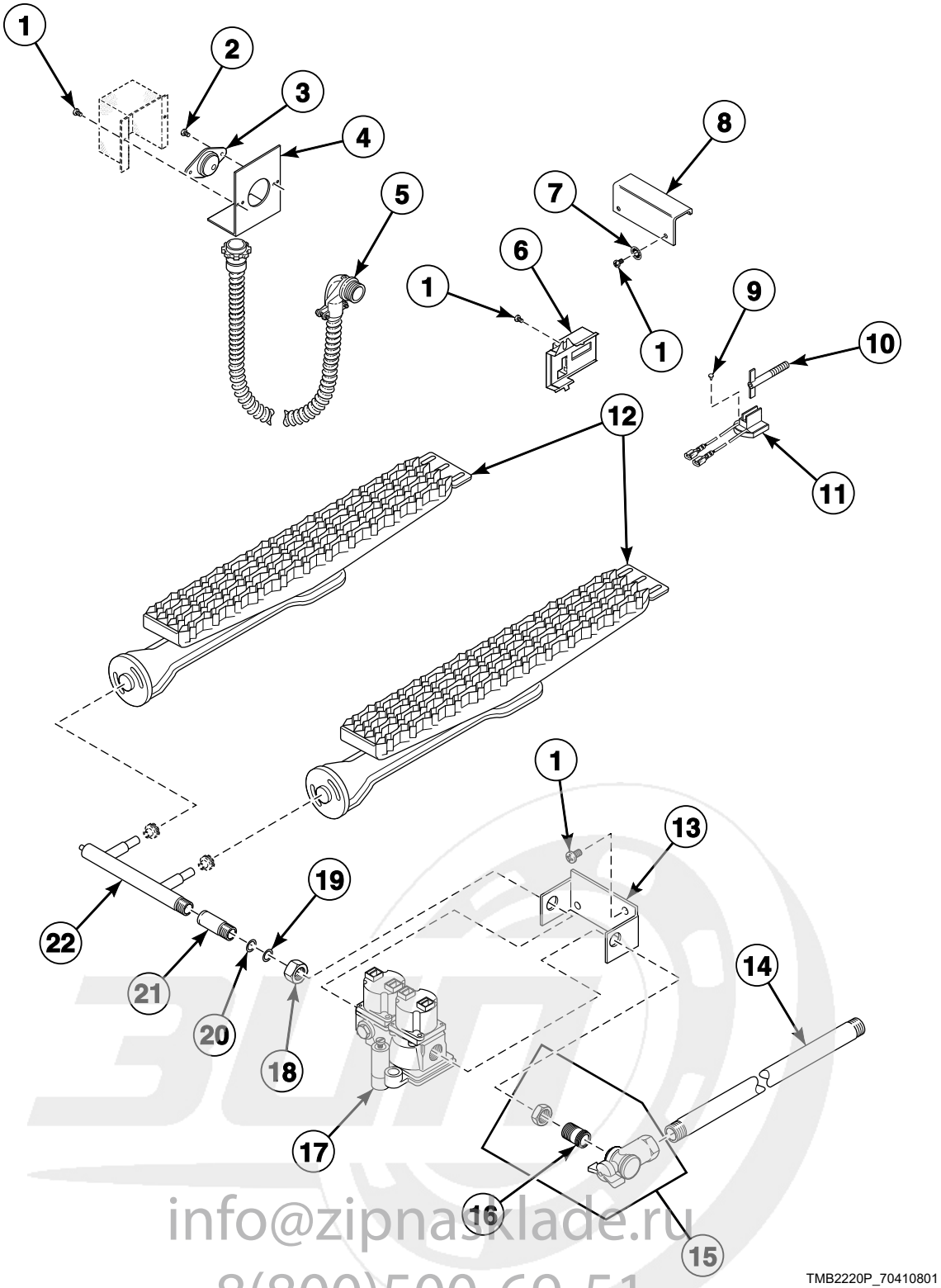

info@zipnasklade.ru
8(800)500-69-51

© Copyright, Alliance Laundry Systems LLC – DO NOT COPY or TRANSMIT

Glow Bar Ignition Burner Assembly - 50 Pound Models Starting Jan 1982 (PA) Through Aug 1982 (PH)

REF	PART NO.	DESCRIPTION	COMMENTS
1	M400664	Screw	
2	M402797	Screw	
3	M409433	Limit Thermostat	
4	M400838	Thermodisc Bracket	
5	M403824	Wire Harness Assembly	CG models
	N/A	Wire Harness Assembly	EG models
6	510213	Sensor	
7	03815	Washer	
8	M402746	Deflector Shield	
9	56693	Screw	
10	55438P	Igniter	
11	M402745P	Igniter Bracket Assembly	
12	M4448P3	Burner Kit	Includes both burners
13	N/A	Bracket	
14	M400749	Pipe	
15	M4983P3	Shut-Off Valve Kit	
16	44092201	Tailpiece	1/2 inch NPT
	44092202	Tailpiece	1/2 inch BPT
17	M402750P	Gas Valve	Basotrol; Natural Gas (N.G.); Regulated; 120 Volt
	M403151P	Gas Valve	Basotrol; Liquid Petroleum Gas (L.P.); Unregulated; 120 Volt
18	M401548	Nut	
19	M400606	Washer	
20	M400605	Anti-Torque Ring	
21	M406681	Manifold Pipe Assembly	
22	N/A	Manifold	

N/A = Part no longer available

info@zipnasklade.ru
8(800)500-69-51

© Copyright, Alliance Laundry Systems LLC – DO NOT COPY or TRANSMIT

Glow Bar Ignition Gas Valve Components - 50 Pound Models

Models Starting January, 1982 (PA) Through August, 1982 (PH)

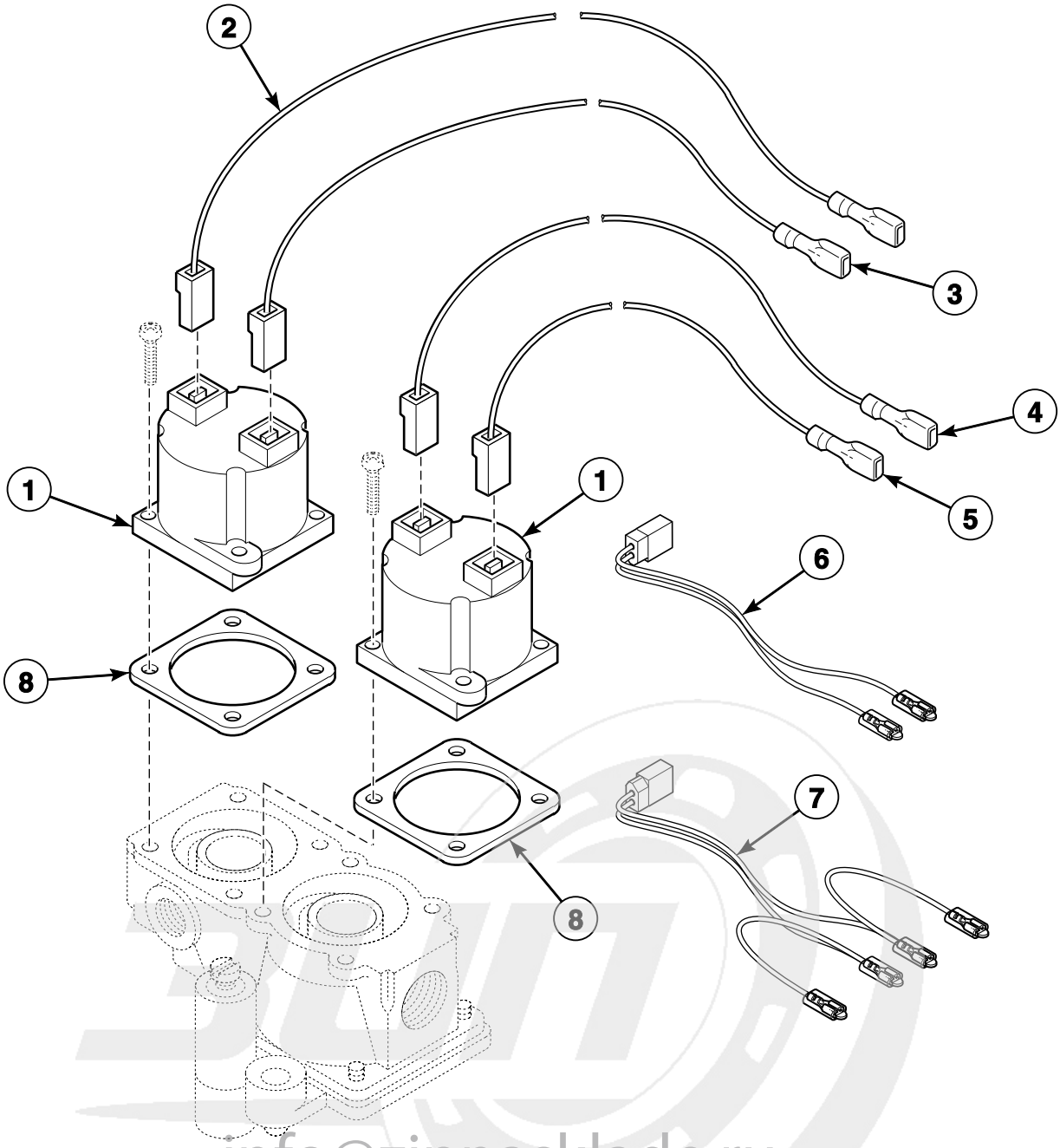

TMB2517P_70410801

info@zipnasklade.ru
8(800)500-69-51

© Copyright, Alliance Laundry Systems LLC – DO NOT COPY or TRANSMIT

Glow Bar Ignition Gas Valve Components - 50 Pound Models

REF	PART NO.	DESCRIPTION	COMMENTS
1	M406217P	Magnetic Operator	120 Volt
2	M402824	Jumper Wire	Blue
3	N/A	Jumper Wire	Purple
4	M402823	Jumper Wire	Purple
5	M402825	Jumper Wire	Blue
6	M412997	Harness Assembly	CG models; OM control suffix
7	M413650	Gas Valve Harness Assembly	CG models; OM control suffix; Reversing and nonreversing; Australia
8	M400798	Gasket	

N/A = Part no longer available

info@zipnasklade.ru
8(800)500-69-51

© Copyright, Alliance Laundry Systems LLC – DO NOT COPY or TRANSMIT

Glow Bar Ignition Burner Assembly

Models Starting September, 1982 (PJ) Through May, 1991 (ZE)

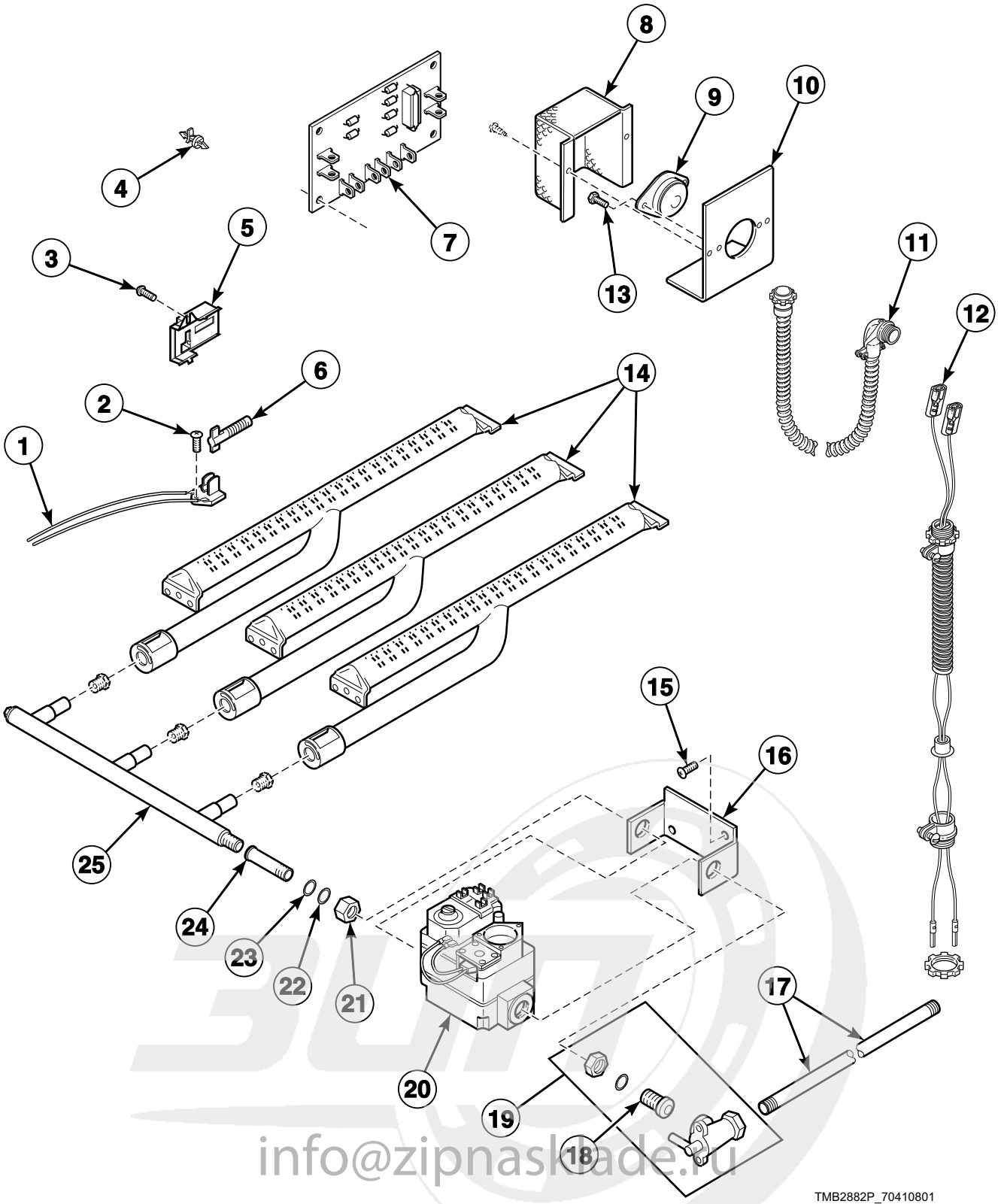

info@zipnaskade.ru
8(800)500-69-51

© Copyright, Alliance Laundry Systems LLC – DO NOT COPY or TRANSMIT

Glow Bar Ignition Burner Assembly

REF	PART NO.	DESCRIPTION	COMMENTS
	M4454P3	L.P. Conversion Kit	75CG models; Natural Gas (N.G.) to Liquid Petroleum Gas (L.P.)
	M4379P3	L.P. Conversion Kit	50CG models; N.G. to L.P.
	M4478P3	L.P. Conversion Kit	75EG models; N.G. to L.P.
	M4609P3	L.P. Conversion Kit	634 and FG models; N.G. to L.P.
	M413657P	Gas Stove Assembly	634 models
1	M402745P	Igniter Bracket Assembly	
2	56693	Screw	
3	M400664	Screw	
4	M405979	Circuit Board Support	
5	510213	Sensor	
6	55438P	Igniter	
7	M405897P	Diode Logic Board	Located in front control area
8	M414477	Thermostat Cover	
9	M409433	Limit Thermostat	50 pound models
	M410220	Limit Thermostat	75EG models
	M401404	Limit Thermostat	All other 75 pound models
10	M400838	Thermodisc Bracket	50 pound models
	M406882	Thermostat Bracket	75 pound models
11	M403824	Wire Harness Assembly	50CG models
	N/A	Wire Harness Assembly	50EG models
12	M412920	Thermostat Harness	75 pound DC, JC and SC models; 230 Volt/50 Hertz/1 Phase; Cabinet mounted airflow switch
13	M402797	Screw	
14	M405919	Burner Assembly	2 required for 50 pound models; 3 required for 75 pound models; Models through Serial No. 724078ZF
	M410541P	Burner Assembly	2 required for 50 pound models; 3 required for 75 pound models; Models starting Serial No. 724079ZF
15	M405188	Screw	
16	N/A	Bracket	Models through Serial No. 724078ZF
	M406814	Gas Valve Bracket	Models starting Serial No. 724079ZF
17	M400749	Pipe	
18	44092201	Tailpiece	1/2 inch NPT
	44092202	Tailpiece	1/2 inch BPT
19	M4983P3	Shut-Off Valve Kit	
20	M4987P3	Gas Valve Kit	L.P.; Unregulated; 120 Volt
	M4986P3	Gas Valve Kit	N.G.; Regulated; 120 Volt
21	M401548	Nut	
22	M400605	Anti-Torque Ring	
23	M400606	Washer	
24	M406681	Manifold Pipe Assembly	
25	N/A	Manifold	50 pound models
	M406810	Spud Holder Assembly	75 pound models

N/A = Part no longer available

info@zipnasklade.ru
8(800)500-69-51

© Copyright, Alliance Laundry Systems LLC – DO NOT COPY or TRANSMIT

Glow Bar Ignition Gas Valve Coil and Wires

Models Starting September, 1982 (PJ) Through May, 1991 (ZE)

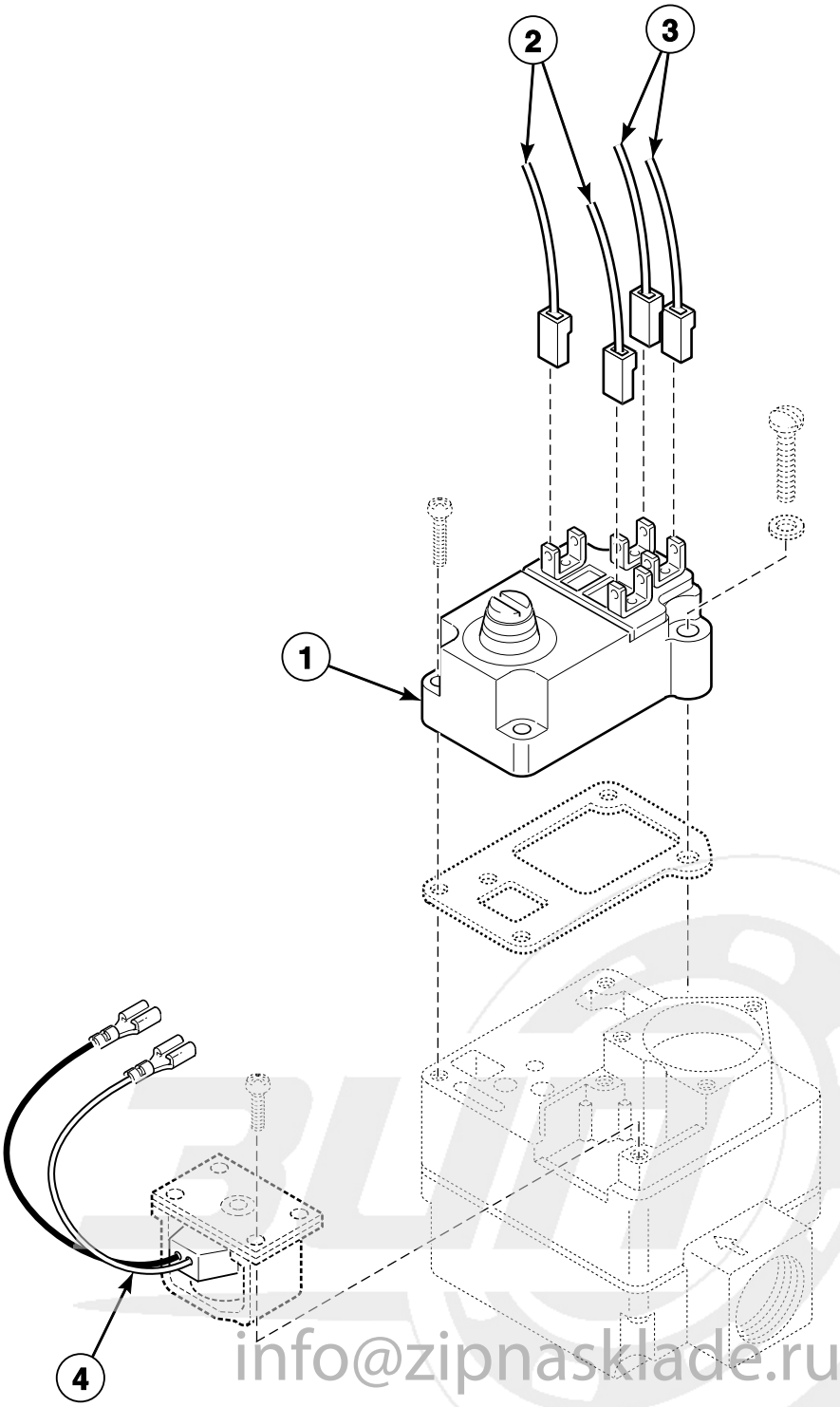

T043P_70410801

info@zipnasklade.ru
8(800)500-69-51

© Copyright, Alliance Laundry Systems LLC – DO NOT COPY or TRANSMIT

Glow Bar Ignition Gas Valve Coil and Wires

REF	PART NO.	DESCRIPTION	COMMENTS
	M405434P	L.P. Valve Conversion Kit	75 pound models; To convert new coil for use on Liquid Petroleum Gas (L.P.) models
1	M405430	Main Coil	
2	N/A	Jumper Wire	Purple
3	M404868	Jumper Wire	Blue
4	N/A	Redundant Coil	Not available as a separate part, order new valve

N/A = Part no longer available

info@zipnasklade.ru
8(800)500-69-51

© Copyright, Alliance Laundry Systems LLC – DO NOT COPY or TRANSMIT

Instant Electronic Ignition Burner Assembly

50 Pound Models Starting June, 1991 (ZF)

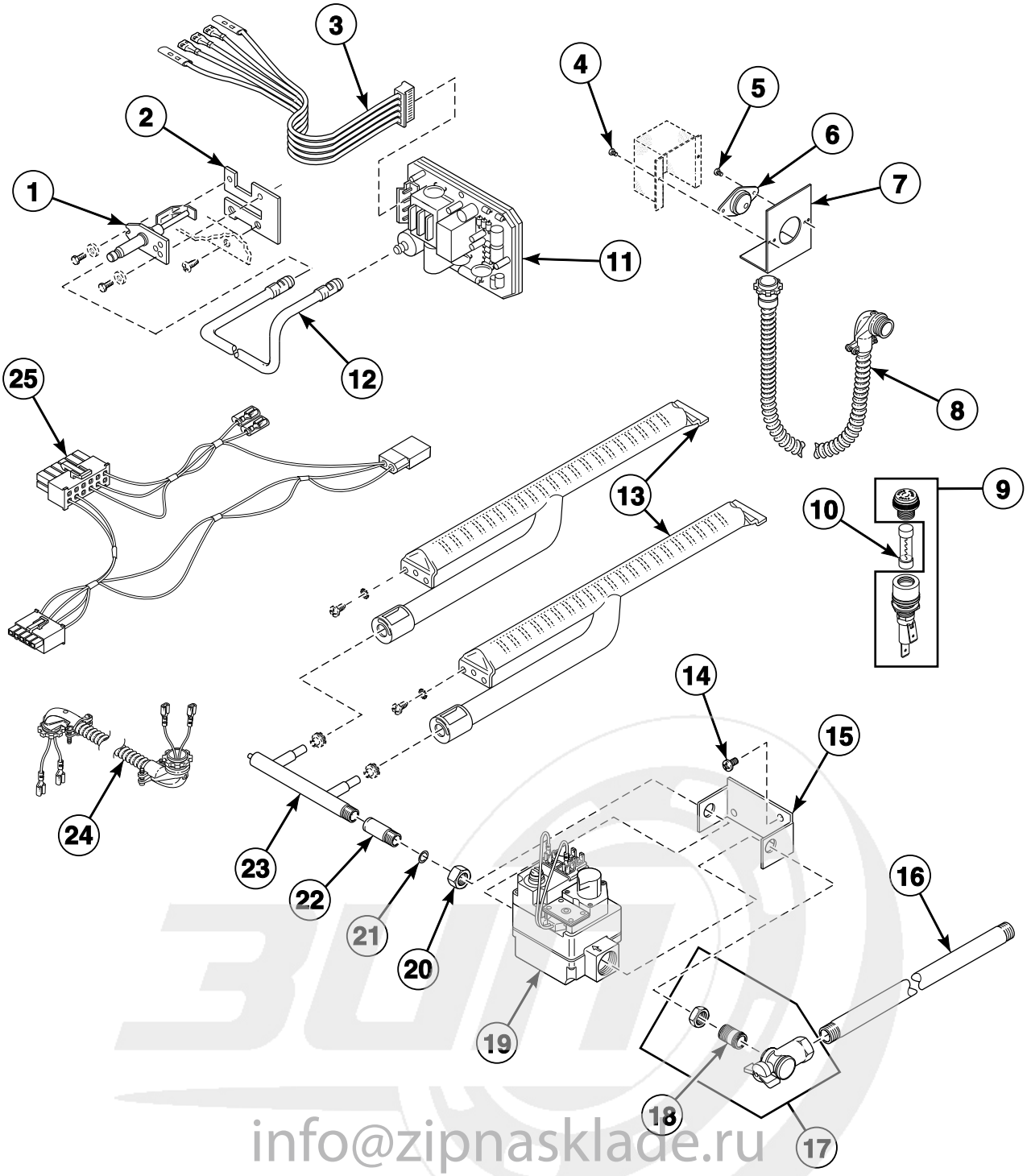

info@zipnasklade.ru
8(800)500-69-51

© Copyright, Alliance Laundry Systems LLC – DO NOT COPY or TRANSMIT

Instant Electronic Ignition Burner Assembly

REF	PART NO.	DESCRIPTION	COMMENTS
	M4379P3	L.P. Conversion Kit	CG models; Natrual Gas (N.G.) to Liquid Petroleum Gas (L.P.)
	M414795	Stove Assembly	
1	M406934P	Spark Igniter	
2	M406936	Bracket	
3	M410599	Wire Harness Assembly	
	M406880	Ignition Wire Harness Assembly	
4	M400664	Screw	
5	M402797	Screw	
6	M401404	Limit Thermostat	EG models
	M409433	Limit Thermostat	CG models
7	M400838	Thermodisc Bracket	
8	M403824	Wire Harness Assembly	EG models
	N/A	Wire Harness Assembly	CG models
9	91024P	Fuse Receptacle	
10	430836	Fuse	3/4 Amp; 250 Volt; A, DT, JT and ST models; 480 Volt/60 Hertz/3 Phase with MT control suffix
11	M406789P	Ignition Control	120 Volt
	70367301P	Ignition Control	24 Volt
12	M406881	High Voltage Lead	
13	M405919	Burner Assembly	2 required; Models through Serial No. 724077ZE
	M410541P	Burner Assembly	2 required; Models starting Serial No. 724078ZF
14	M405188	Screw	
15	M405945	Gas Valve Bracket	Models through Serial No. 724077ZE
	M406814	Gas Valve Bracket	Models starting Serial No. 724078ZF
16	M400749	Pipe	
17	M4983P3	Shut-Off Valve Kit	
18	44092201	Tailpiece	1/2 inch NPT
	44092202	Tailpiece	1/2 inch BPT
19	M409152P	Gas Valve Assembly	60 Hertz; N.G.; Regulated
	M409153P	Gas Valve Assembly	60 Hertz; L.P.; Unregulated
	M409517P	Gas Valve	50 Hertz; N.G.; Regulated
	M409561P	Gas Valve Assembly	50 Hertz; L.P.; Unregulated
	M413332P	Gas Valve	24 Volt; N.G.; Regulated
	M4909P3	Valve Replacement Kit	24 Volt; L.P.; Unregulated
20	M401548	Nut	
21	M400605	Anti-Torque Ring	
22	M406681	Manifold Pipe Assembly	
23	N/A	Manifold	Models through Serial No. 724077ZE
	M410546	Spud Holder Assembly	Models starting Serial No. 724078ZF
24	M412609	Stove Limit Harness Assembly	CG models; OM control suffix; Reversing and nonreversing; Airflow switch to stove high limit thermostat
25	M413678P	Control Box Harness Assembly	CG models; OM control suffix

N/A = Part no longer available

info@zipnasklad.ru
8(800)500-69-51

© Copyright, Alliance Laundry Systems LLC – DO NOT COPY or TRANSMIT

Gas Burner Components for Electronic Ignition

75 Pound Models

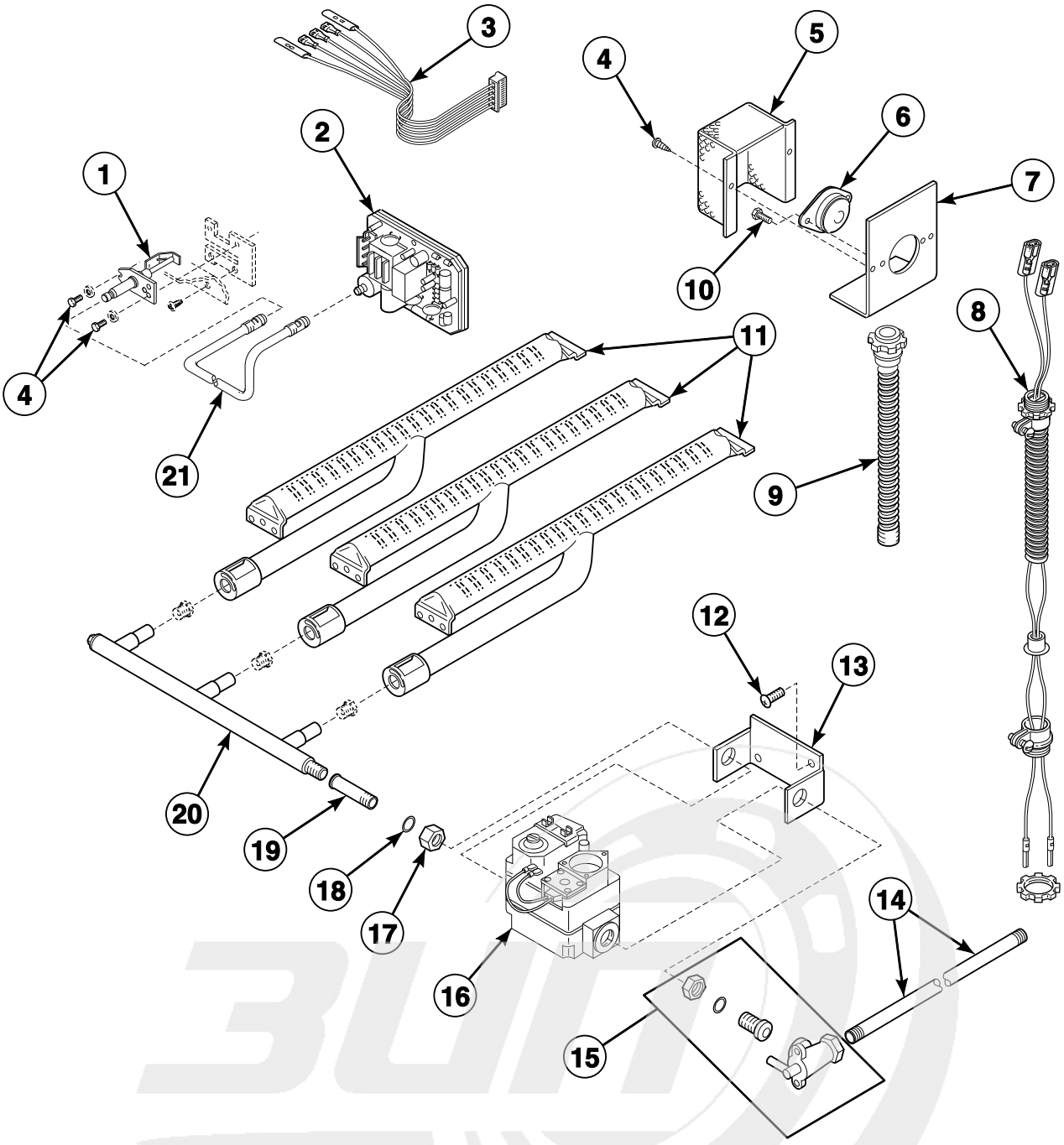

TMB2490P_70410801

info@zipnasklade.ru
8(800)500-69-51

© Copyright, Alliance Laundry Systems LLC – DO NOT COPY or TRANSMIT

Gas Burner Components for Electronic Ignition

REF	PART NO.	DESCRIPTION	COMMENTS
	M4454P3	L.P. Conversion Kit	CG models; Used to convert Natural Gas (N.G.) to Liquid Petroleum Gas (L.P.)
	M4478P3	L.P. Conversion Kit	EG models; Used to convert N.G. to L.P.
	M4609P3	L.P. Conversion Kit	634 and FG models; Used to convert N.G. to L.P.
	M413657P	Gas Stove Assembly	634 models
	M414366	Gas Stove Assembly	All other models
1	M406934P	Spark Igniter	
2	M406789P	Ignition Control	MM and MT control suffixes; 120 Volt
	70367301P	Ignition Control	OM control suffix; 24 Volt
3	M406880	Ignition Wire Harness Assembly	MM and MT control suffixes
	M413678P	Control Box Harness Assembly	OM control suffix
4	M400664	Screw	
5	M414477	Thermostat Cover	
6	M410220	Limit Thermostat	634 and EG models
	M401404	Limit Thermostat	CG models
7	M406882	Thermostat Bracket	
8	M412920	Thermostat Harness	DC, JC and SC models; 230 Volt/50 Hertz/1 Phase; Cabinet mounted airflow switch
9	N/A	Stove Limit Wire Harness Assembly	MM and MT control suffixes
	M413691	Stove Limit Harness Assembly	OM control suffix
	M413499	Stove Limit Wire Harness Assembly	634 and FG models
10	M402797	Screw	
11	M405919	Burner Assembly	3 required; Models through Serial No. 724078ZF
	M410541P	Burner Assembly	3 required; Models starting Serial No. 724079ZF
12	M405188	Screw	
13	M406814	Gas Valve Bracket	Models starting Serial No. 724079ZF
	M405945	Gas Valve Bracket	Models through Serial No. 724078ZF
14	M400749	Pipe	
15	M4983P3	Shut-Off Valve Kit	
16	M409152P	Gas Valve Assembly	N.G.; CD, MM and MT control suffixes; 120 Volt/60 Hertz
	M409153P	Gas Valve Assembly	L.P.; CD, MM and MT control suffixes; 120 Volt/60 Hertz
	M409517P	Gas Valve	N.G.; CD, MM and MT control suffixes; 120 Volt/50 Hertz
	M409561P	Gas Valve Assembly	L.P.; CD, MM and MT control suffixes; 120 Volt/50 Hertz
	44138701P	Gas Valve Kit	L.P.; OM control suffix; 24 Volt/50 Hertz
	M4897P3	L.P. Gas Valve Kit	OM control suffix; 24 Volt/60 Hertz
	M413468P	Gas Valve	N.G.; OM control suffix; 24 Volt/50 and 60 Hertz
17	M401548	Nut	
18	M400605	Anti-Torque Ring	
19	M406681	Manifold Pipe Assembly	
20	M406810	Spud Holder Assembly	
21	M406881	High Voltage Lead	

N/A = Part no longer available

info@zipnasklade.ru
8(800)500-69-51

© Copyright, Alliance Laundry Systems LLC – DO NOT COPY or TRANSMIT

Instant Electronic Ignition Gas Valve Coil and Wires

Models Starting June, 1991 (ZF)

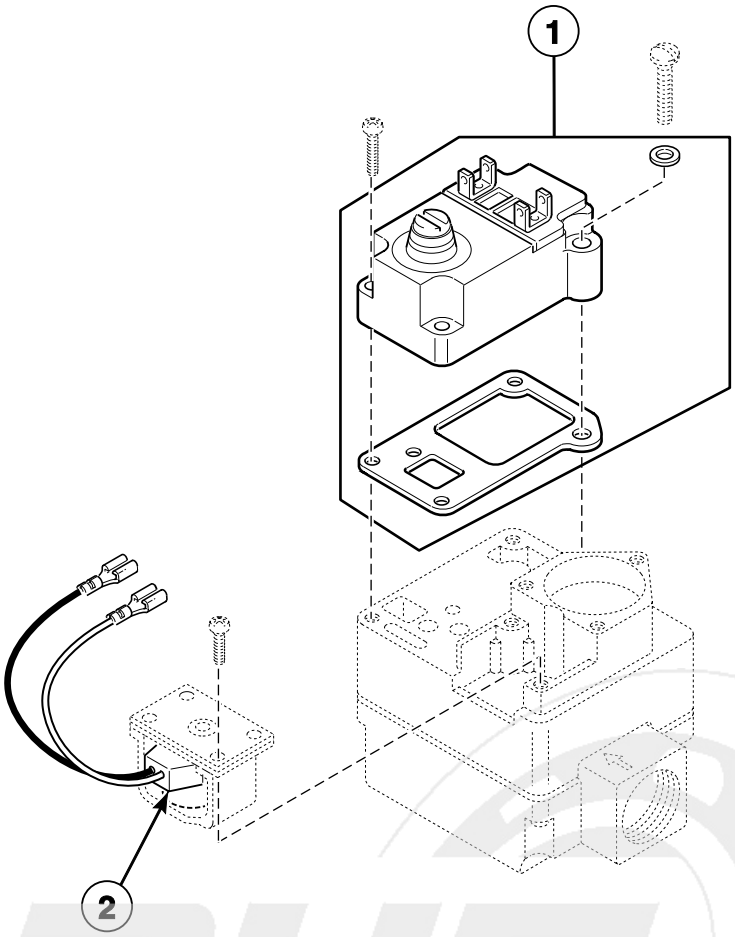

TMB2223P_70410801

info@zipnasklade.ru
8(800)500-69-51

© Copyright, Alliance Laundry Systems LLC – DO NOT COPY or TRANSMIT

Instant Electronic Ignition Gas Valve Coil and Wires

REF	PART NO.	DESCRIPTION	COMMENTS
	M405434P	L.P. Valve Conversion Kit	75 pound models; Included with M4454P3 L.P. Conversion Kit and M4478P3 L.P. Conversion Kit
1	M411134	Gas Valve Main Coil	120 Volt; Includes gasket
	44042901P	Gas Valve Coil	24 Volt; 60 Hertz
	M413332P	Gas Valve	50 pound models; 24 Volt; Natural Gas (N.G.); Regulated
	M4909P3	Valve Replacement Kit	50 pound models; 24 Volt; Liquid Petroleum Gas (L.P.).; Unregulated
	M413468P	Gas Valve	50 pound models; N.G.; 24 Volt/60 Hertz
	M409152P	Gas Valve Assembly	50 pound models; N.G.; 120 Volt/60 Hertz
	44154501P	Gas Valve	50 pound models; 50 Hertz; N.G.
	M4897P3	L.P. Gas Valve Kit	50 pound models; 60 Hertz; L.P.
	44138701P	Gas Valve Kit	50 pound models; 50 Hertz; L.P.
2	N/A	Redundant Coil	Not available as separate part, order new valve

N/A = Part no longer available

info@zipnasklade.ru
8(800)500-69-51

© Copyright, Alliance Laundry Systems LLC – DO NOT COPY or TRANSMIT

Burner Assembly for Australian Models

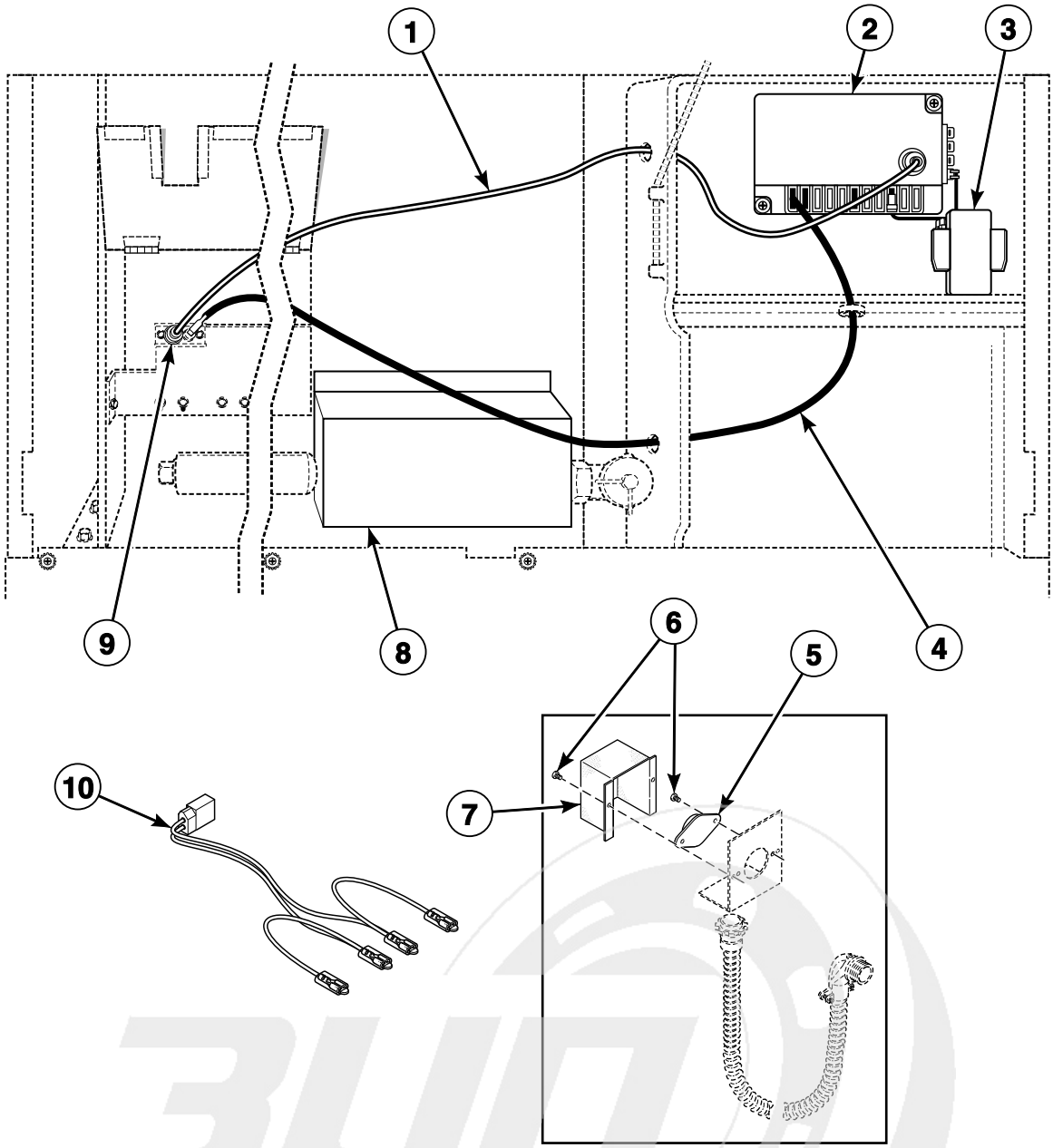

TMB2489P_70410801

info@zipnasklade.ru
8(800)500-69-51

© Copyright, Alliance Laundry Systems LLC – DO NOT COPY or TRANSMIT

Burner Assembly for Australian Models

REF	PART NO.	DESCRIPTION	COMMENTS
1	N/A	High Voltage Lead	
2	M410904P	Instant Electronic Ignition Control	24 Volt
3	N/A	Transformer	240 Volt Primary/24 Volt Secondary
4	N/A	Sensor Jumper Wire	
5	M411943	Manual Reset Thermostat	
6	M400664	Screw	
7	M414477	Thermostat Cover	
8	M410907P	Gas Valve	Natural Gas (N.G.)
	M410908	Gas Valve	Liquid Petroleum Gas (L.P.)
9	M410905P	Spark Igniter	
10	M413650	Gas Valve Harness Assembly	OM control suffix; Dual coil connection; Johnson gas valve

N/A = Part no longer available

info@zipnasklade.ru
8(800)500-69-51

© Copyright, Alliance Laundry Systems LLC – DO NOT COPY or TRANSMIT

Gas Valve Assembly for Dungs/B-M System

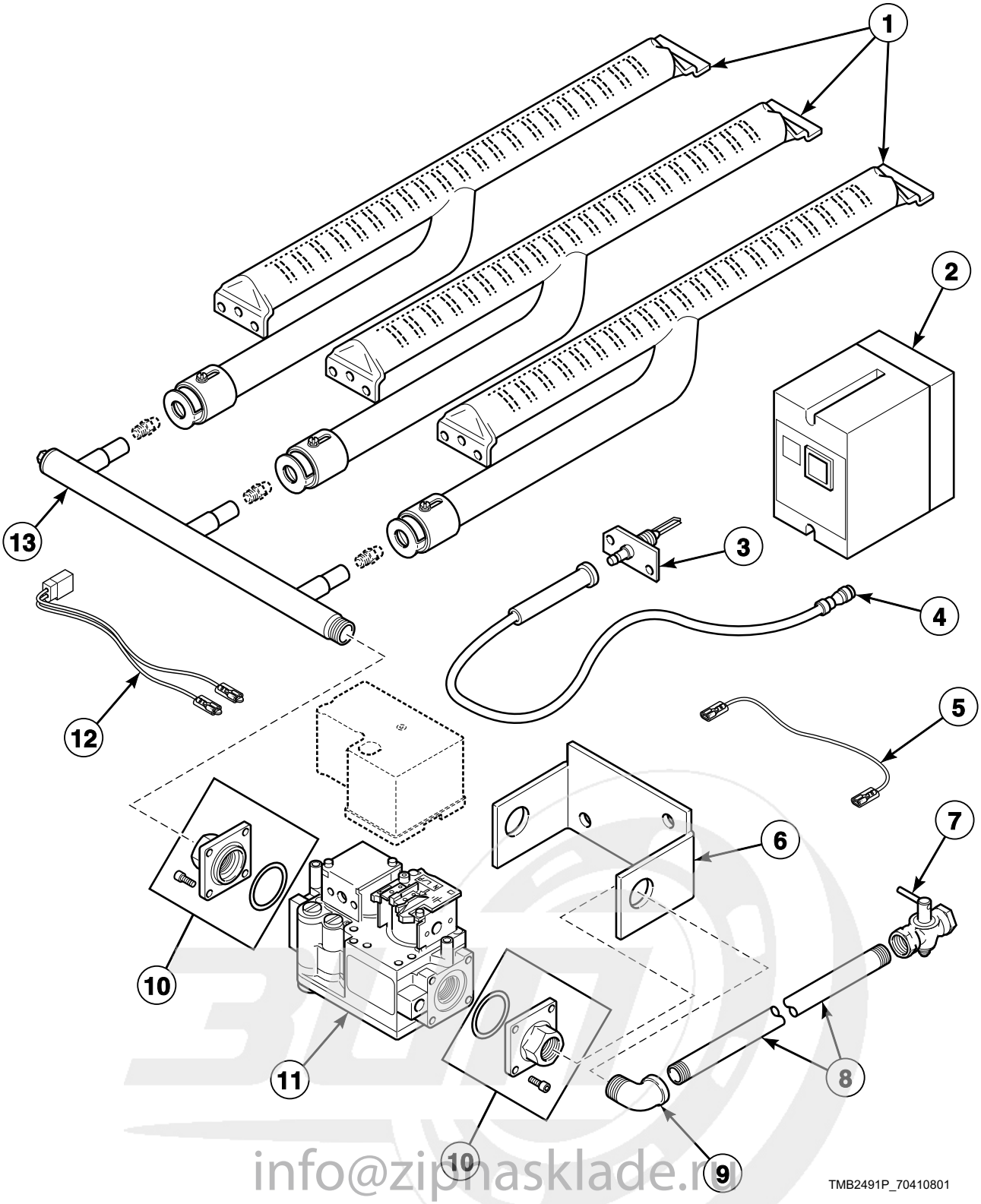

info@zipnasklade.ru
8(800)500-69-51

© Copyright, Alliance Laundry Systems LLC – DO NOT COPY or TRANSMIT

Gas Valve Assembly for Dungs/B-M System

REF	PART NO.	DESCRIPTION	COMMENTS
	607P3	Channel Ignition Kit	Replaces ignition control
1	M410541P	Burner Assembly	2 required for 50 pound models; 3 required for 75 pound models
2	M4898P3	Ignition Control	
3	M406934P	Spark Igniter	
4	N/A	Ignition Control Cable	
5	M412645	Jumper Wire Assembly	Ground
6	N/A	Gas Valve Bracket	
7	M412562P	Gas Shut-Off Valve	
8	M400749	Pipe	
9	H86070034	Street Elbow	
10	M412568	Gas Valve Flange Assembly	
11	N/A	Gas Valve	
12	M412997	Harness Assembly	DC, JC and SC models; OM control suffix; Single coil connection
13	N/A	Spud Holder	

N/A = Part no longer available

info@zipnasklade.ru
8(800)500-69-51

© Copyright, Alliance Laundry Systems LLC – DO NOT COPY or TRANSMIT

Gas System

Channel/Johnson

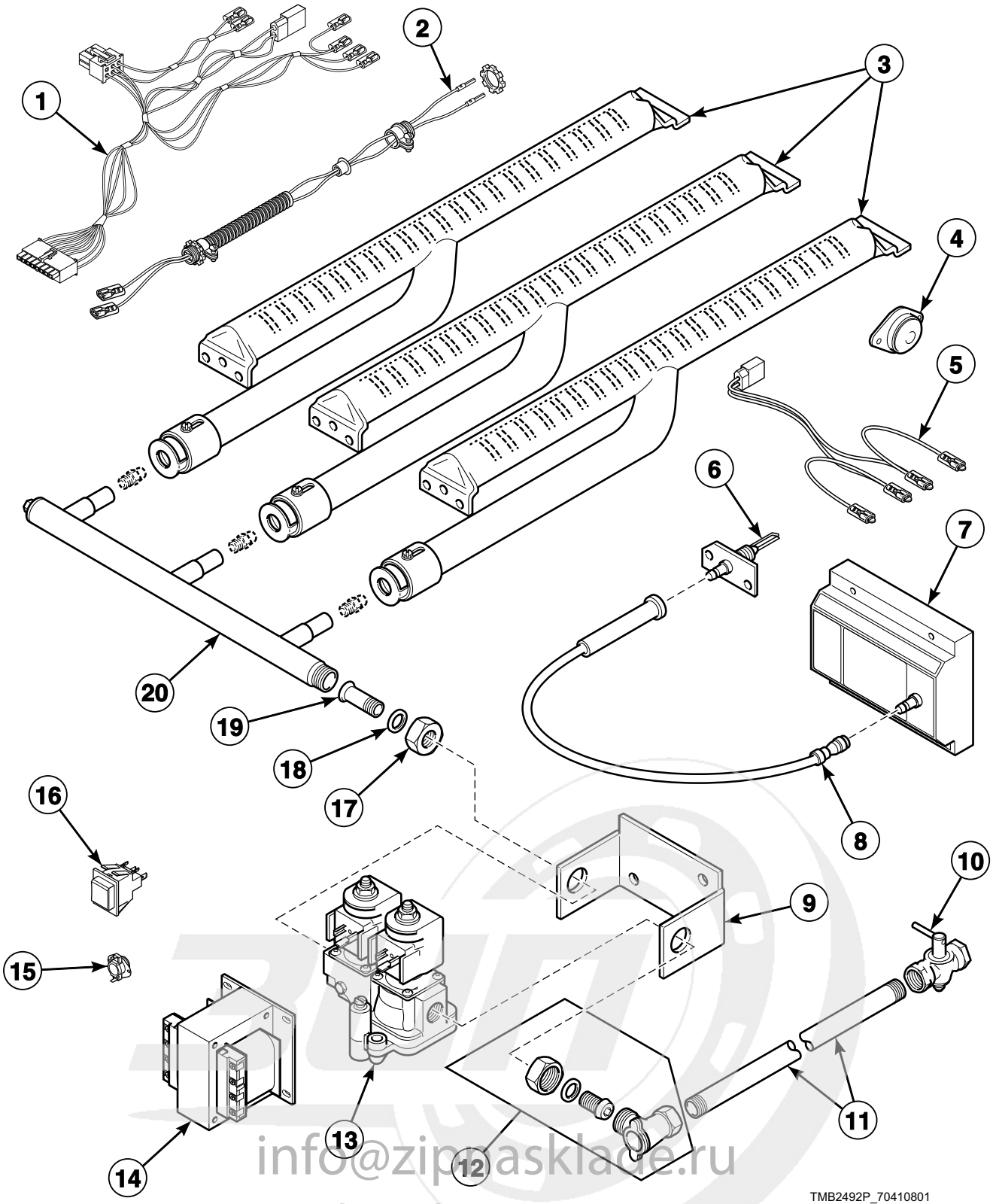

info@zipmasklade.ru
8(800)500-69-51

© Copyright, Alliance Laundry Systems LLC – DO NOT COPY or TRANSMIT

Gas System

REF	PART NO.	DESCRIPTION	COMMENTS
1	M413548	Ignition Control Harness Assembly	75 pound DC, JC and SC models; Manual timer and mechanical coin drop with bulb thermostat
2	M412920	Thermostat Harness	75 pound DC, JC and SC models; 230 Volt/50 Hertz/1 Phase; Cabinet mounted airflow switch
3	M410541P	Burner Assembly	2 required for 50 pound models; 3 required for 75 pound models
4	N/A	Thermostat	
5	M413650	Gas Valve Harness Assembly	OM control suffix; Australian; Dual coil connection
6	M406934P	Spark Igniter	
7	70367401P	Ignition Control	
8	M406881	High Voltage Lead	
9	M406814	Gas Valve Bracket	
10	M412562P	Gas Shut-Off Valve	
11	M400749	Pipe	
12	M4983P3	Shut-Off Valve Kit	
13	M413332P	Gas Valve	
14	M413100P	Transformer	208-240 Volt/60 Hertz/3 Phase
15	M410220	Limit Thermostat	Manual reset
16	M413431	Pushbutton Switch	Lighted; DC, JC and SC models
17	M401548	Nut	
18	M400605	Anti-Torque Ring	
19	M413395	Manifold Pipe Assembly	
20	M410546	Spud Holder Assembly	50 pound models
	M406810	Spud Holder Assembly	75 pound models

N/A = Part no longer available

info@zipnasklade.ru
8(800)500-69-51

© Copyright, Alliance Laundry Systems LLC – DO NOT COPY or TRANSMIT

Burner Orifices - A, DT, JT, ST and TKD Models

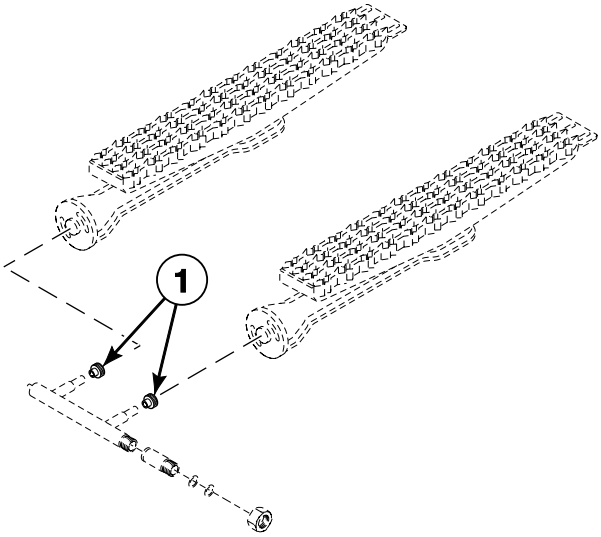

Standing Pilot Ignition
Automatic Pilot Ignition
Glow Bar Ignition
Models Starting January 1982 (PA)
Through August 1982 (PH)

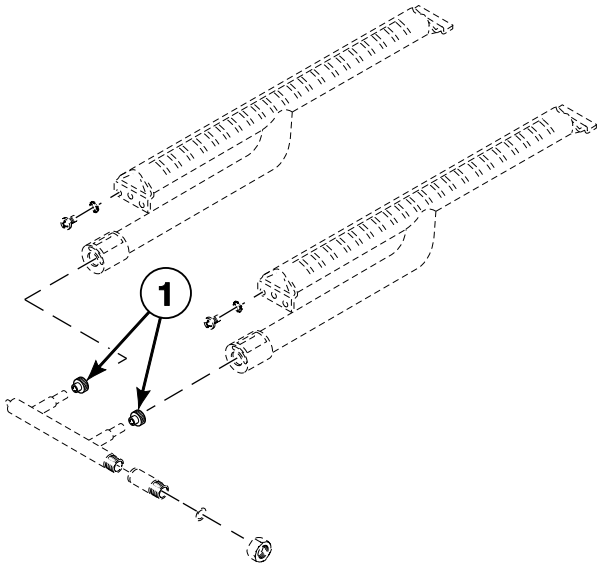

Glow Bar Ignition
Models Starting September 1982 (PJ)
Through May 1991 (ZE)
Instant Electronic Ignition
Models Starting June 1991 (ZF)

Note: 50 pound models use 2 orifices and 75 pound models use 3 orifices.

TMB2113P_70410801

info@zipnasklade.ru
8(800)500-69-51

© Copyright, Alliance Laundry Systems LLC – DO NOT COPY or TRANSMIT

Burner Orifices - A, DT, JT, ST and TKD Models

REF	PART NO.	DESCRIPTION	COMMENTS
1	M401021	Burner Orifice	Natural Gas (N.G.); Drill no. 30 (3.3 mm); EG models 0-2,000 feet; CG and FG models 4,001-8,000 feet
	M401017	Burner Orifice	N.G.; Drill no. 31 (3.0 mm); EG models 2,001-6,000 feet; CG and FG models 6,001-10,000 feet
	N/A	Burner Orifice	N.G.; Drill no. 32 (2.9 mm); EG models 6,001-8,000 feet
	M401022	Burner Orifice	N.G.; Drill no. 33 (2.9 mm); EG models 8,001-10,000 feet
	M401001	Burner Orifice	Liquid Petroleum Gas (L.P.); Drill no. 48 (1.9 mm); EG models 0-2,000 feet; CG and FG models 6,001-8,000 feet
	N/A	Burner Orifice	L.P.; Drill no. 49 (1.8 mm); EG models 2,001-4,000 feet; CG and FG models 8,001-10,000 feet
	M401016	Burner Orifice	L.P.; Drill no. 50 (1.8 mm); EG models 4,001-6,000 feet
	M401019	Burner Orifice	L.P.; Drill no. 51 (1.7 mm); EG models 6,001-8,000 feet
	M401025	Burner Orifice	L.P.; Drill no. 52 (1.6 mm); EG models 8,001-10,000 feet
	M401002	Burner Orifice	N.G.; Drill no. 20 (4.1 mm); Models DTB634 and STB634 0-2,000 feet
	M401020	Burner Orifice	N.G.; Drill no. 23 (3.9 mm); Models DTB634 and STB634 2,001-4,000 feet
	M402997	Burner Orifice	N.G.; Drill no. 25 (3.8 mm); Models DTB634 and STB634 4,001-6,000 feet
	M400998	Burner Orifice	N.G.; Drill no. 27 (3.7 mm); Models DTB634 and STB634 6,001-8,000 feet
	M400997	Burner Orifice	N.G.; Drill no. 29 (3.4 mm); Models DTB634 and STB634 8,001-10,000 feet
	N/A	Burner Orifice	L.P.; Drill no. 40 (2.5 mm); Use M4743P3 L.P. Valve Kit to replace; Models DTB634 and STB634 0-2,000 feet
	M403017	Burner Orifice	L.P.; Drill no. 42 (2.4 mm); Models DTB634 and STB634 2,001-4,000 feet
	M406184	Burner Orifice	L.P.; Drill no. 43 (2.3 mm); Models DTB634 and STB634 4,001-6,000 feet
	M401011	Burner Orifice	L.P.; Drill no. 44 (2.2 mm); Models DTB634 and STB634 6,001-8,000 feet
	M401027	Burner Orifice	L.P.; Drill no. 45 (2.1 mm); Models DTB634 and STB634 8,001-10,000 feet
	M401014	Burner Orifice	N.G.; Drill no. 28 (3.6 mm); CG and FG models 0-2,000 feet
	M400997	Burner Orifice	N.G.; Drill no. 29 (3.4 mm); CG and FG models 2,001-4,000 feet
	M401027	Burner Orifice	L.P.; Drill no. 45 (2.1 mm); CG and FG models 0-2,000 feet
	M401003	Burner Orifice	L.P.; Drill no. 46 (2.1 mm); CG and FG models 2,001-4,000 feet
	M400999	Burner Orifice	L.P.; Drill no. 47 (2.0 mm); CG and FG models 4,001-6,000 feet

N/A = Part no longer available

NOTE: For CE gas and orifice information, refer to Installation Manual.

NOTE: 50 pound models use 2 orifices and 75 pound models use 3 orifices.

info@zipnasklade.ru
8(800)500-69-51

© Copyright, Alliance Laundry Systems LLC – DO NOT COPY or TRANSMIT

Electric Heater Components and Thermostat (Drawing 1 of 3)

50 Pound Models Through Serial No. 9412024947 and 75 Pound Models Through Serial No. 9304053995

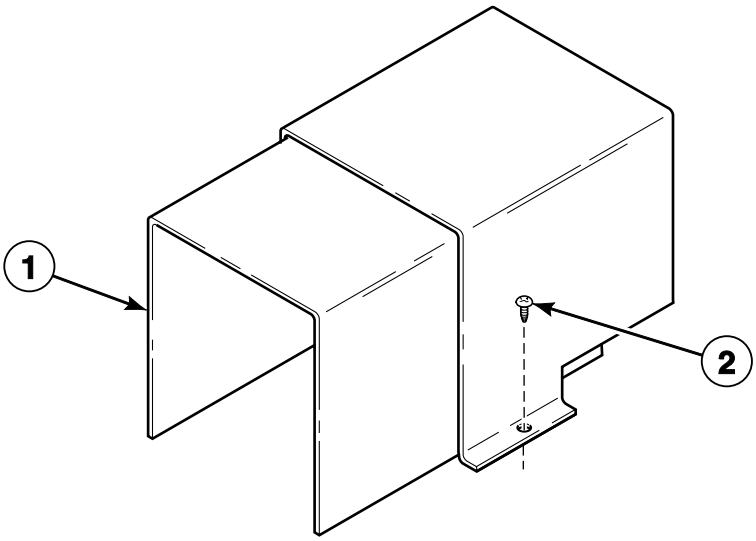

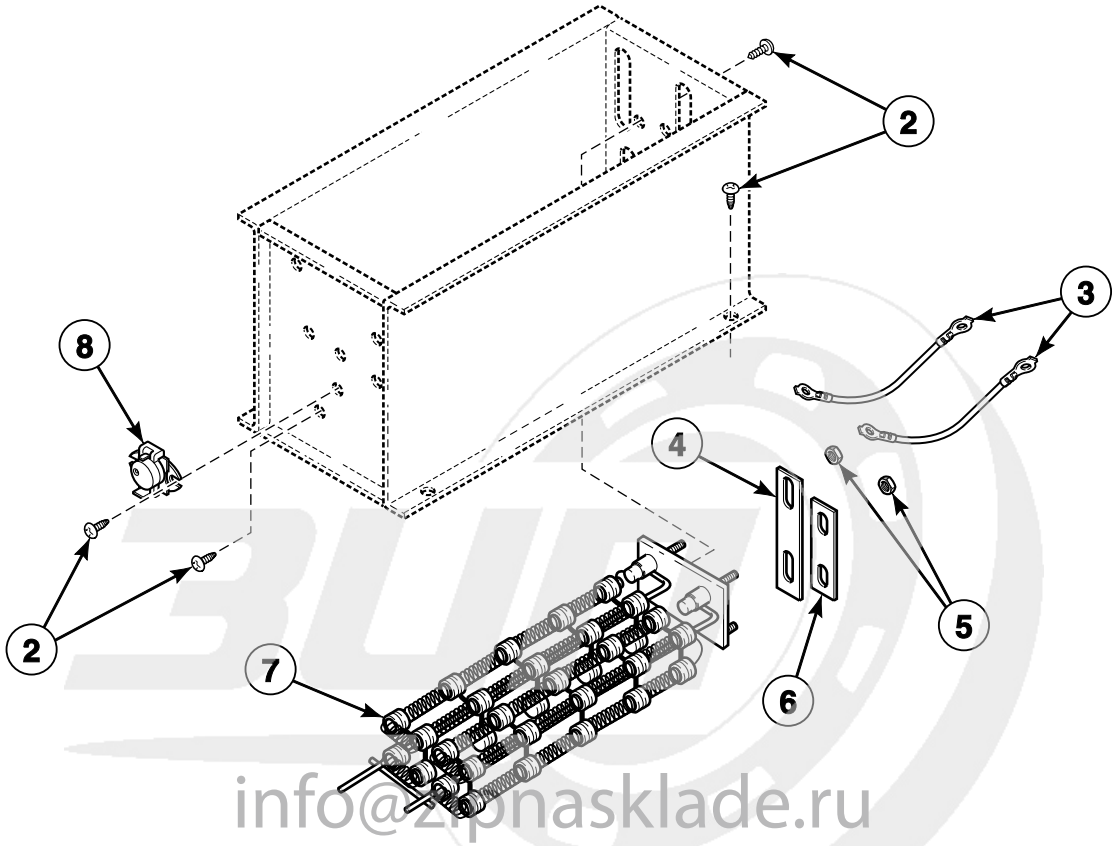

TMB2263P_70410801

info@zipnasklade.ru
8(800)500-69-51

© Copyright, Alliance Laundry Systems LLC – DO NOT COPY or TRANSMIT

Electric Heater Components and Thermostat (Drawing 1 of 3)

REF	PART NO.	DESCRIPTION	COMMENTS
1	M401159	Hood Assembly	
2	M400664	Screw	
3	M401281	Jumper Wire Assembly	6 required for 208 or 240 Volt; 3 required for 380, 415 or 480 Volt
	M403743	Jumper Wire Assembly	1 required for 480 Volt
4	M400866	Jumper Bar	6 required for 208 or 240 Volt; 3 required for 380-415 Volt; 2 required for 480 Volt
5	Q6163	Nut	
6	M400869	Jumper Strip	6 required for 208-240 Volt and 380-415 Volt; 3 required for 480 Volt
7	M405253P	Heater Element	3 required; 21 kW; 7 kW; Models through Serial No. 9303030868
	M405254P	Heater Element	3 required; 208 Volt/60 Hertz; 10 kW; Models through Serial No. 9303030868
	M405255P	Heater Element	3 required; 380 Volt/50 Hertz; 10 kW; 220 Volt; Models through Serial No. 9303030868
	M405256P	Heater Element	3 required; 240 or 480 Volt/60 Hertz; 415 Volt/50 Hertz; 10 kW; 240 Volt; Models through Serial No. 9303030868
	M410939P	Heater Element	3 required; 240 or 480 Volt/60 Hertz; 415 Volt/50 Hertz; 10 kW; 240 Volt; Models starting Serial No. 9303030869 through Serial No. 9412024947
	M410940P	Heater Element	3 required; 208 Volt/60 Hertz; 10 kW; Models starting Serial No. 9303030869 through Serial No. 9412024947
	M410941P	Heater Element	3 required; 380 Volt/50 Hertz; 10 kW; 220 Volt; Models starting Serial No. 9303030869 through Serial No. 9412024947
8	M4347P3	Thermostat Kit	Replaces older flat faced stat
	M405943	Limit Thermostat	Raised face type

info@zipnasklade.ru
8(800)500-69-51

© Copyright, Alliance Laundry Systems LLC – DO NOT COPY or TRANSMIT

Electric Heater Components and Thermostat (Drawing 2 of 3)

DC, JC and SC Models - 50 Pound Models Starting Serial No. 9412024948 and
75 Pound Models Starting Serial No. 9304053996

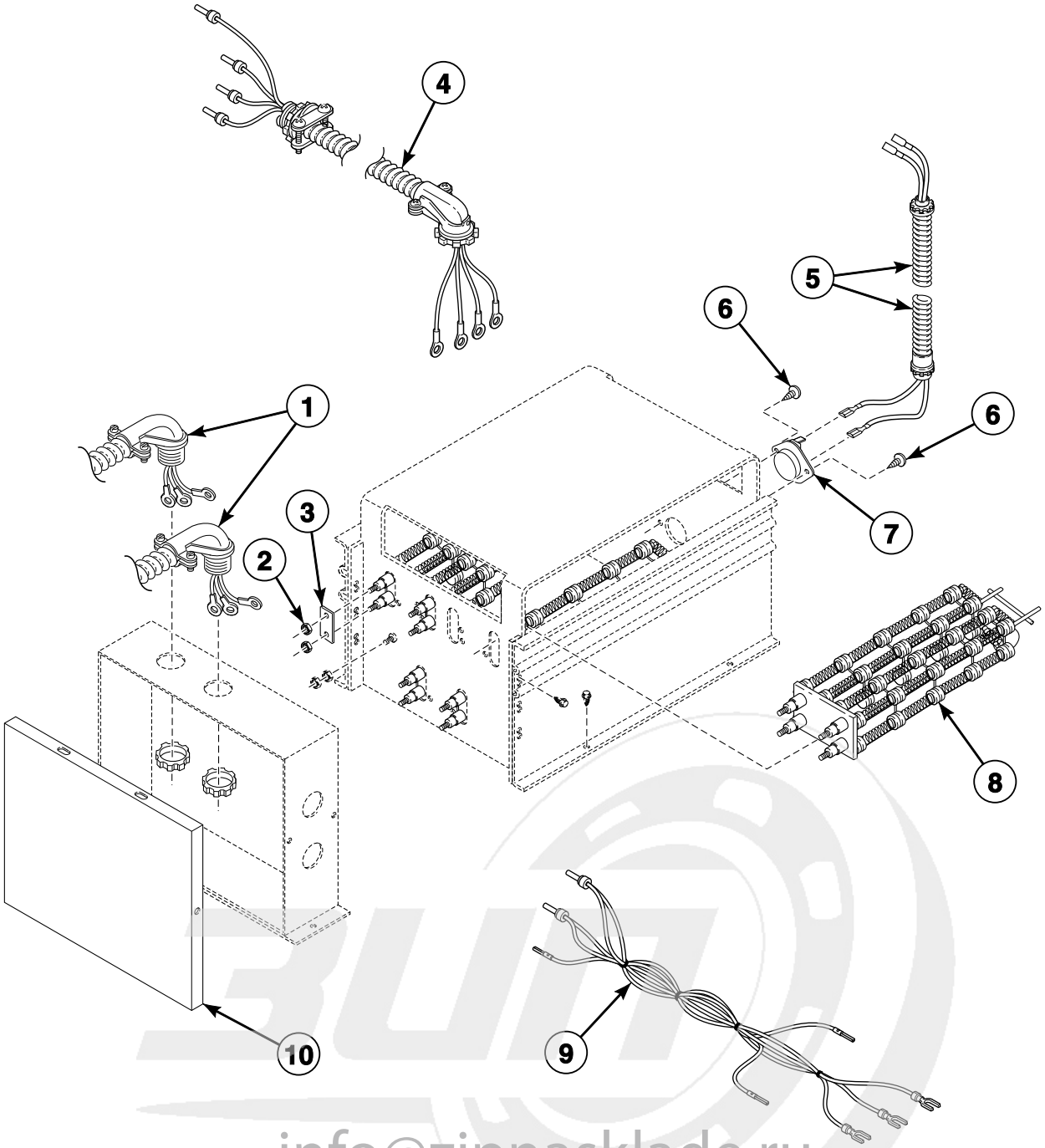

TMB2883P_70410801

info@zipnasklade.ru
8(800)500-69-51

© Copyright, Alliance Laundry Systems LLC – DO NOT COPY or TRANSMIT

Electric Heater Components and Thermostat (Drawing 2 of 3)

REF	PART NO.	DESCRIPTION	COMMENTS
1	M412287	Jumper Wire Assembly	1 required for 380 or 415 Volt; 2 required for 480 Volt
	M401281	Jumper Wire Assembly	Nonreversing; Contactor to heater; 8 gauge; 6 required for 208-240 Volt; 3 required for 380, 415 or 480 Volt
	N/A	Jumper Wire Assembly	Reversing; Heater to contactor; 2 required for 208-240 Volt; 1 required for 380, 415 or 480 Volt
2	70054	Nut	
	Q6163	Nut	
3	M400866	Jumper Bar	1 required for 380, 415 or 480 Volt
	M400869	Jumper Strip	6 required for all models except 480 Volt; 3 required for 480 Volt
4	M412801	Heater Cable Harness Assembly	240 or 400 Volt/3 Phase; Ground; 8 gauge; H1-H3
	M412802	Heater Cable Harness Assembly	230 Volt/50 Hertz/3 Phase; 8 gauge; H4-H6
5	N/A	Cord Assembly	
6	33562	Screw	
7	M410220	Limit Thermostat	50 pound models
	M409433	Limit Thermostat	75 pound models
8	M410939P	Heater Element	3 required; 10 kW; 240, 415 or 480 Volt/50 Hertz/3 Phase
	M410940P	Heater Element	3 required; 10 kW; 208 Volt
	M410941P	Heater Element	3 required; 10 kW; 380 Volt/50 Hertz/3 Phase
	M412955P	Heater Element	3 required; 7 kW; 240 Volt/50 Hertz/1 Phase
9	M412871	Jumper Harness Assembly	Manual timer; 230 Volt/50 Hertz/3 Phase
10	M412316	Electric Hood	Rear

N/A = Part no longer available

info@zipnasklade.ru
8(800)500-69-51

© Copyright, Alliance Laundry Systems LLC – DO NOT COPY or TRANSMIT

Electric Heater Components and Thermostat (Drawing 3 of 3)

DT, JT, ST and TKD Models - 50 Pound Models Starting Serial No. 9412024948 and
75 Pound Models Starting Serial No. 9304053996

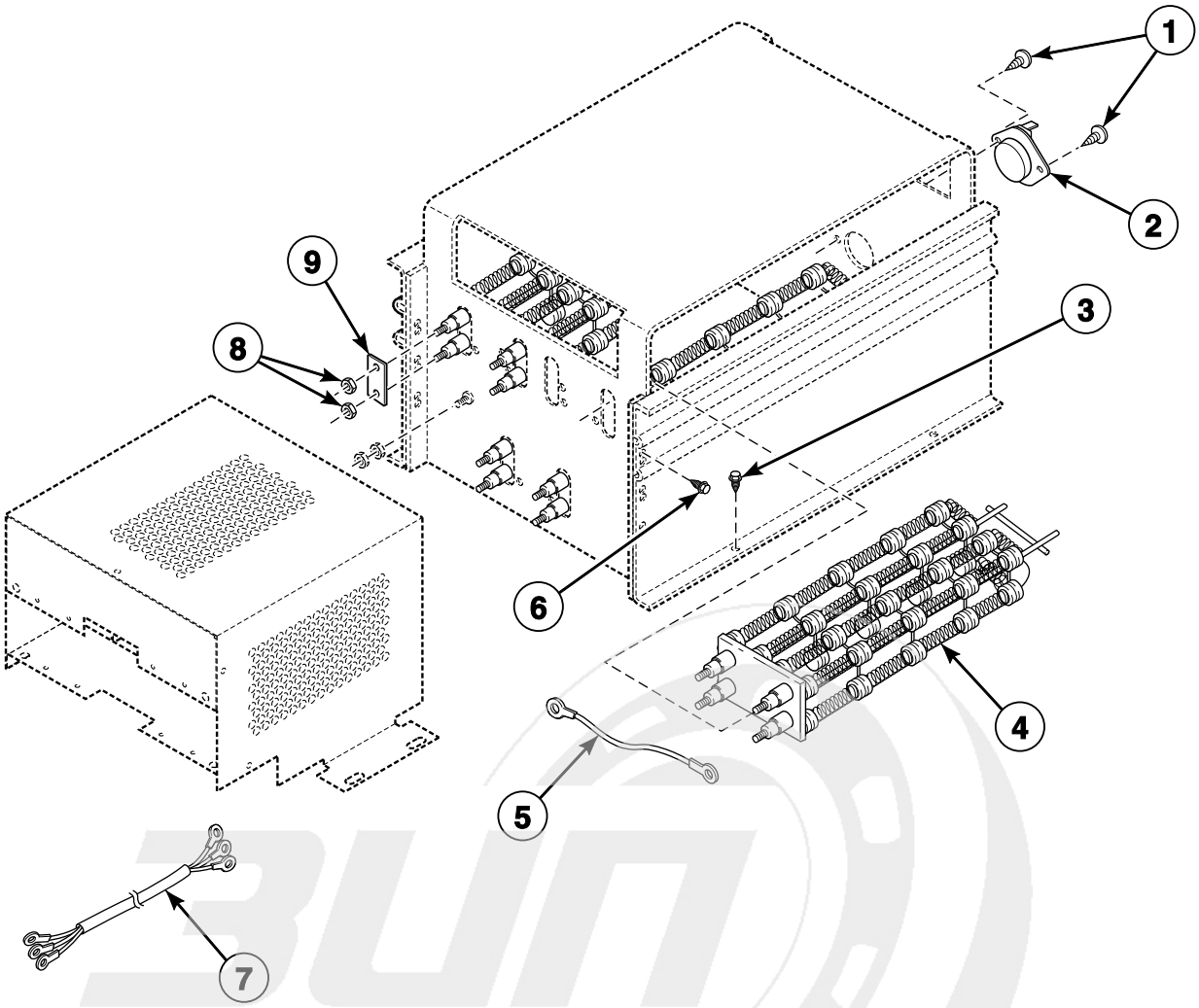

TMB1249P_70410801

info@zipnasklade.ru
8(800)500-69-51

© Copyright, Alliance Laundry Systems LLC – DO NOT COPY or TRANSMIT

Electric Heater Components and Thermostat (Drawing 3 of 3)

REF	PART NO.	DESCRIPTION	COMMENTS
1	33562	Screw	
2	M409433	Limit Thermostat	50 pound models; 21 kW; 240 Volt/50 Hertz/1 Phase; Use with 7 kW heater element
	M410220	Limit Thermostat	30 kW; Use with 10 kW heater element
3	430497	Screw	
4	M410939P	Heater Element	10 kW; 240 Volt; 3 required for 240 Volt/50 or 60 Hertz/3 Phase, 400-415 Volt/50 Hertz/3 Phase and 480 Volt/60 Hertz/3 Phase
	M410940P	Heater Element	10 kW; 208 Volt; 3 required for 200 Volt/50 Hertz/3 Phase and 200-208 Volt/60 Hertz/3 Phase
	M410941P	Heater Element	10 kW; 220 Volt; 3 required for 380 Volt/50 or 60 Hertz/3 Phase and 440 Volt/60 Hertz/3 Phase
	M412955P	Heater Element	50 pound models; 7 kW; 240 Volt/50 Hertz/1 Phase
5	M412287	Jumper Wire Assembly	1 required for 380 Volt/50 Hertz/3 Phase and 400-415 Volt/50 Hertz/3 Phase; 2 required for 480 Volt/60 Hertz/3 Phase
6	70240301	Screw	
7	M413959	Heater Cable Assembly	OM control suffix; 8 gauge; H1-H3; 200 Volt/50 Hertz/3 Phase, 200-208 Volt/60 Hertz/3 Phase, 240 Volt/60 Hertz/3 Phase, 380 Volt/50 Hertz/3 Phase, 400-415 Volt/50 Hertz/3 Phase, 480 Volt/60 Hertz/3 Phase and 240 Volt/50 Hertz/1 Phase
	M413960	Heater Cable Assembly	OM control suffix; 8 gauge; H4-H6; 200 Volt/50 Hertz/3 Phase, 200-208 Volt/60 Hertz/3 Phase, 240 Volt/60 Hertz/3 Phase and 240 Volt/50 Hertz/1 Phase
8	70054	Nut	
9	M400866	Jumper Bar	380 Volt/50 Hertz/3 Phase, 400-415 Volt/50 Hertz/3 Phase and 480 Volt/60 Hertz/3 Phase
	M400869	Jumper Strip	3 required for 480 Volt/60 Hertz/3 Phase; 6 required for all others

info@zipnasklade.ru
8(800)500-69-51

© Copyright, Alliance Laundry Systems LLC – DO NOT COPY or TRANSMIT

Electric Heat Contactor Box Components

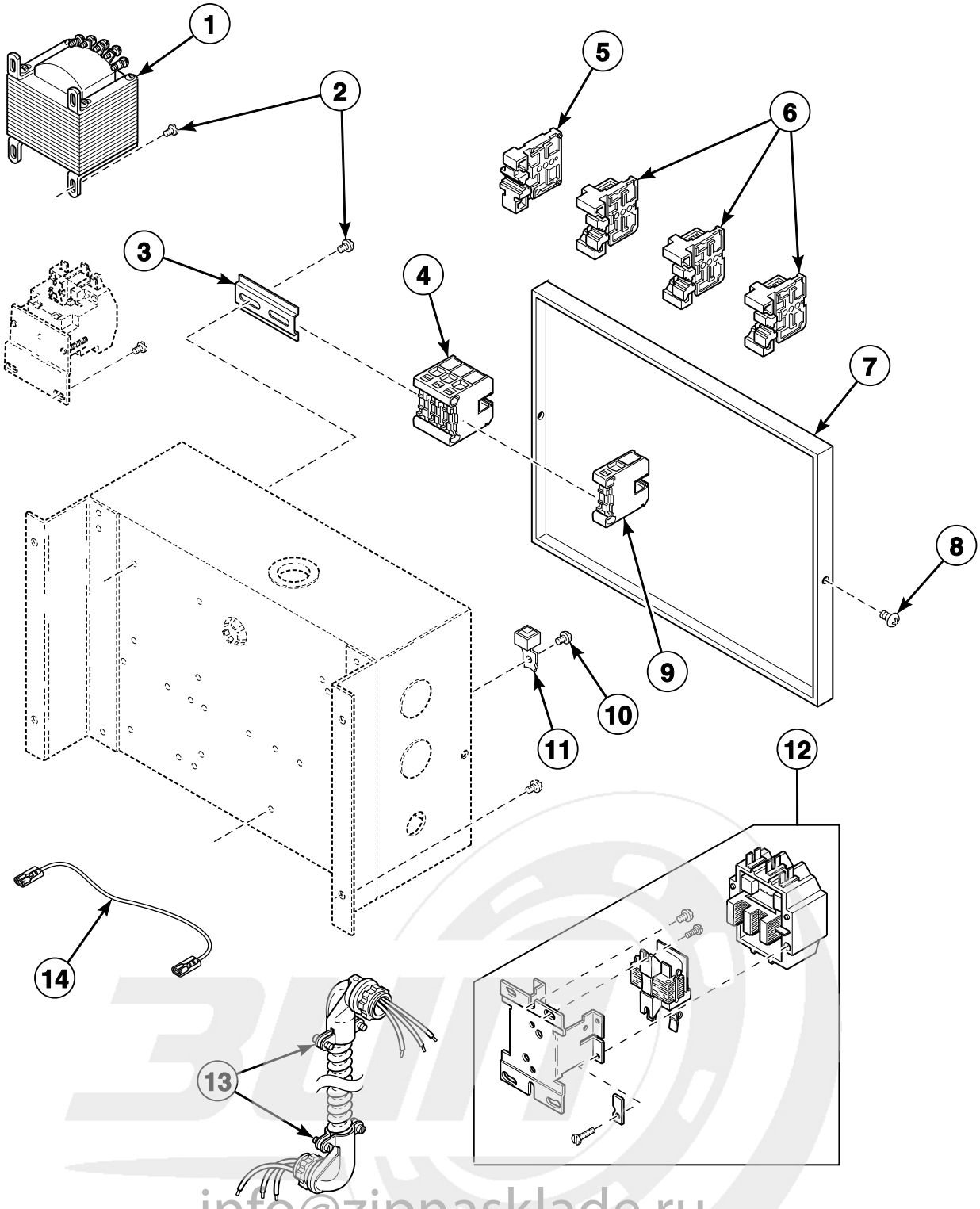

info@zipnasklade.ru
8(800)500-69-51

© Copyright, Alliance Laundry Systems LLC – DO NOT COPY or TRANSMIT

Electric Heat Contactor Box Components

REF	PART NO.	DESCRIPTION	COMMENTS
1	M401391P	Transformer	480 Volt and some later 208-240 Volt/3 Phase models
2	M400044	Screw	50 pound models
	51780	Screw	75 pound models
3	N/A	Din Rail	Models through Serial No. 9409xxxxx
4	M412045P	Terminal Block	Models starting Serial No. 9409xxxxx
5	M400685	Terminal Block	3 required for 208-240 or 480 Volt; 2 required for 240 Volt/1 Phase; 4 required for 380 or 415 Volt/3 Phase
6	M400681	Terminal Block End	
7	M414351	Contactor Box Cover	
8	430497	Screw	50 pound models
	M400664	Screw	75 pound models
9	M412042	Terminal Block	380 or 415 Volt/50 Hertz
10	M402917	Screw	Ground
11	M411283	Ground Lug Connector	
12	M405116P	Contactor	120 or 480 Volt
	M400905P	Contactor	2 required for 208-240 Volt; 1 required for 380 or 415 Volt
13	N/A	Wire Harness Assembly	75 pound models; Nonreversing with junction box; 208-240, 380 or 415 Volt
14	M412117	Jumper Wire Assembly	75 pound models; 6 required for 208-240 Volt/3 Phase; 3 required for 380, 415 or 480 Volt/3 Phase
	M412116	Jumper Wire Assembly	75 pound models; 6 required for 240 Volt/1 Phase

N/A = Part no longer available

info@zipnasklade.ru
8(800)500-69-51

© Copyright, Alliance Laundry Systems LLC – DO NOT COPY or TRANSMIT

Steam Heater and Valve

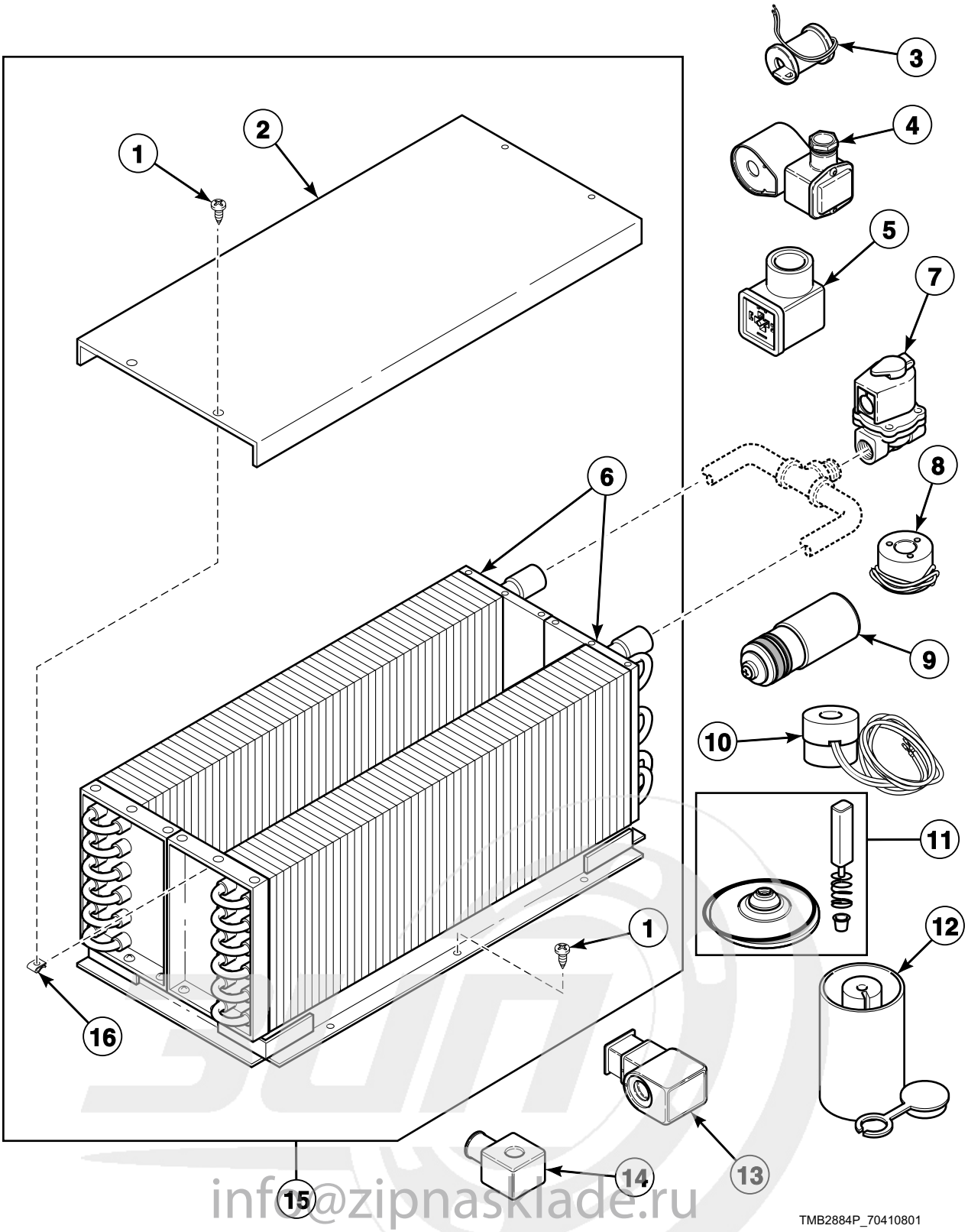

info@zipnasklade.ru
8(800)500-69-51

© Copyright, Alliance Laundry Systems LLC – DO NOT COPY or TRANSMIT

Steam Heater and Valve

REF	PART NO.	DESCRIPTION	COMMENTS
1	430497	Screw	
2	M400828	Low Pressure Steam Cover	
3	M412258	Steam Valve Coil	For 70351002 Steam Valve (Danfoss; 24 Volt/50 Hertz)
	M413301	Steam Valve Coil	For M413297 Steam Valve; 208-240 Volt/60 Hertz
	M413302	Steam Valve Coil	For M413298 Steam Valve; 240 Volt/50 Hertz
	70205701P	Steam Valve Coil	For 70351001P Steam Valve; 24 Volt/60 Hertz
4	M413299P	Steam Valve Coil	For M413295 Steam Valve; 120 Volt/60 Hertz
5	70370301P	Solenoid Valve DIN Connector	
6	M400636P	Steam Coil	9 inches high; 2 required
	M400637P	Steam Coil	15 inches high; 2 required
7	M413295P	Steam Valve	120 Volt/60 Hertz; For M413299 Steam Valve Coil
	F951P3	Steam Valve Kit	208-240 Volt/60 Hertz; For M413301 Steam Valve Coil
	M413298P	Steam Valve	240 Volt/50 Hertz; For M413302 Steam Valve Coil
	F8322903	Steam Valve	24 Volt/50 Hertz; DC, JC and SC models; A, DT, JT and ST models with OM control suffix
	F8322902	Steam Valve	24 Volt/60 Hertz; OM control suffix
8	N/A	Coil	For M413295 Steam Valve (Asco No. 8222E3); 120 Volt/50 or 60 Hertz
9	M400152	Valve Repair Kit	For M413295 Steam Valve and M401377 Steam Valve (Asco No. 8222E3)
10	M401383	Steam Valve Coil	For M401379 Steam Valve (Asco No. 8222B95); 240 Volt/50 or 60 Hertz
11	M412259	Steam Valve Rebuild Kit	For M413295P, M413297P and M413298P Steam Valves
	F8379502	Valve Rebuild Kit	For F8322903 and F8322902 Steam Valves
12	M401384	Valve Repair Kit	For M413295 Steam Valve and M401379 Steam Valve (Asco No. 8222B95)
13	70351012	Steam Solenoid	For 70351002 Steam Valve; 24 Volt/50 Hertz
14	70351011P	Steam Solenoid	For 70351001P Steam Valve; 24 Volt/60 Hertz
15	M413572P	Steam Heater Assembly	15 inch
16	M400974	Clip	

N/A = Part no longer available

info@zipnasklade.ru
8(800)500-69-51

© Copyright, Alliance Laundry Systems LLC – DO NOT COPY or TRANSMIT

Cabinet High Limit Thermostat and Backdraft Damper

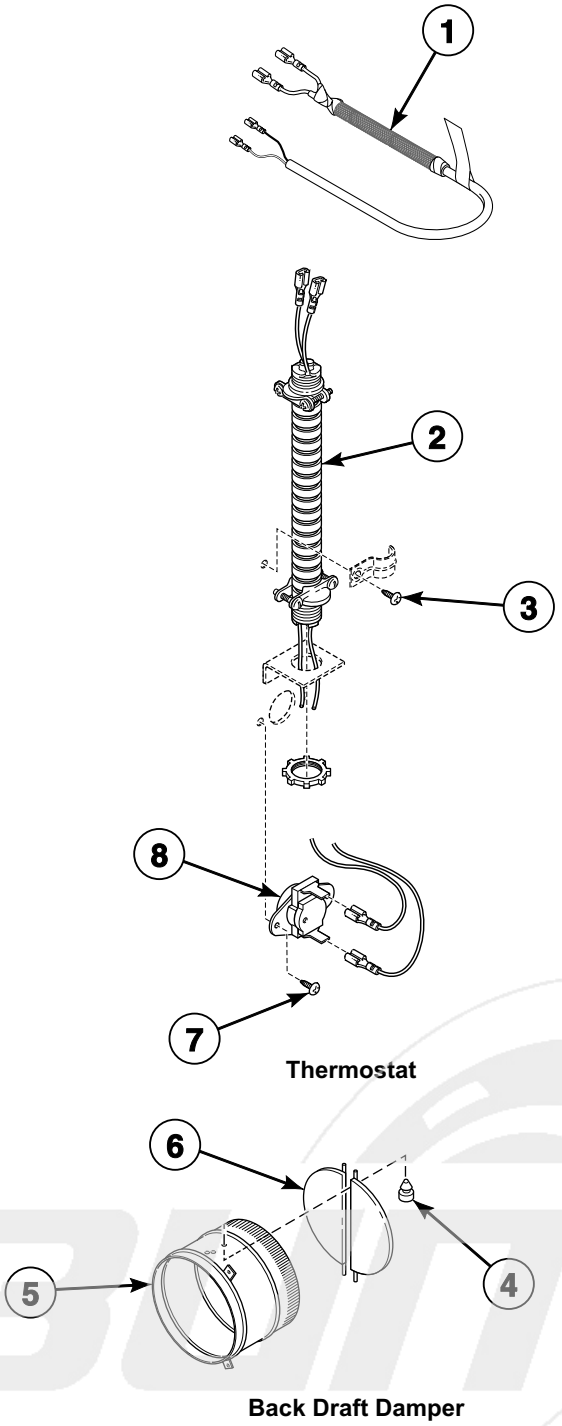

info@zipnasklade.ru
8(800)500-69-51

TMB3050P_70410801

© Copyright, Alliance Laundry Systems LLC – DO NOT COPY or TRANSMIT

Cabinet High Limit Thermostat and Backdraft Damper

REF	PART NO.	DESCRIPTION	COMMENTS
1	M412670	Cabinet Limit Harness Assembly	72 inches
2	N/A	Wire Harness Assembly	EG models
	M413693P	Cabinet Limit Harness Assembly	All other models
3	430497	Screw	
4	M400795	Bumper	
5	M413173	Exhaust Thimble	10 inches; Models DTB634 and STB634
	M412288	Exhaust Thimble Assembly	8 inches; All other models
6	M413382	Thimble Vane Assembly	10 inches; 2 required; Models DTB634 and STB634
	M400503	Thimble Vane Assembly	8 inches; 2 required; All other models
7	M400664	Screw	
8	M406412	Limit Thermostat	EG models
	M411941	Manual Reset Thermostat	Australian models
	M410542	Limit Thermostat	All other models

N/A = Part no longer available

info@zipnasklade.ru
8(800)500-69-51

© Copyright, Alliance Laundry Systems LLC – DO NOT COPY or TRANSMIT

Warning Labels

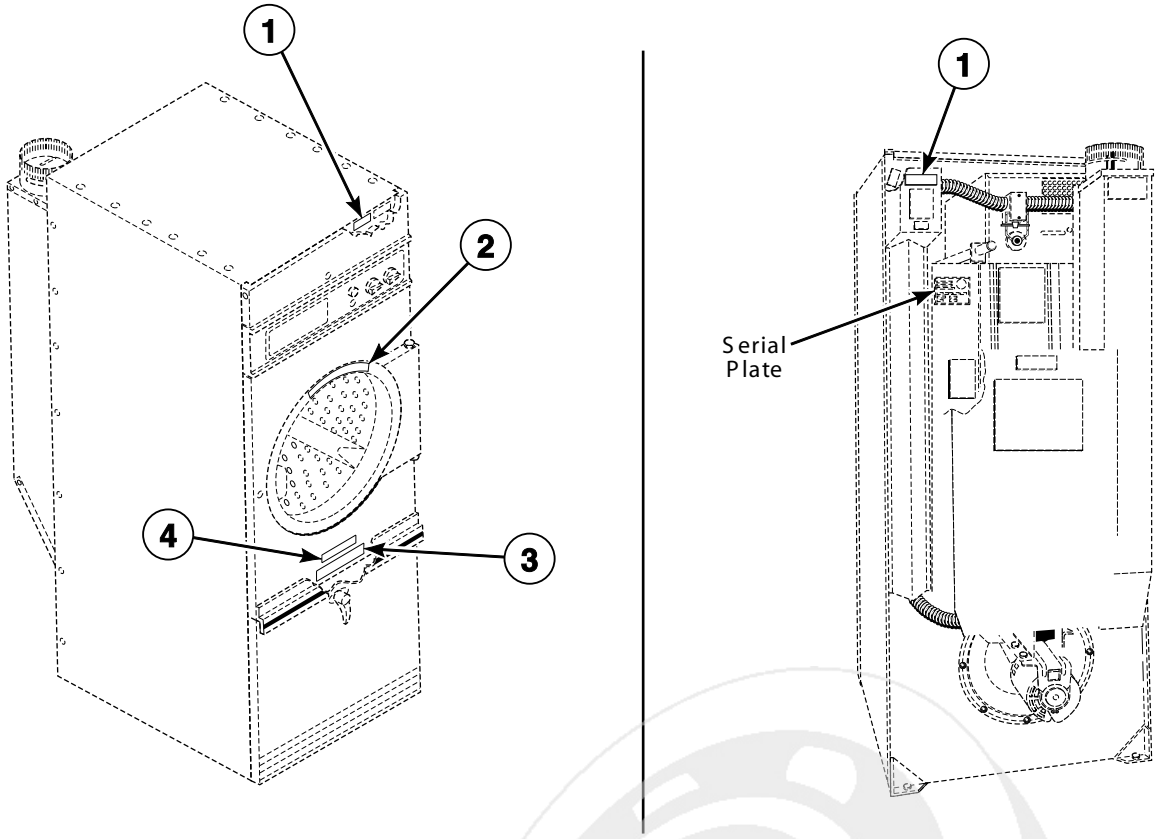

T384P_70410801

info@zipnasklade.ru
8(800)500-69-51

© Copyright, Alliance Laundry Systems LLC – DO NOT COPY or TRANSMIT

Warning Labels

REF	PART NO.	DESCRIPTION	COMMENTS
1	500316	Warning Label	Disconnect power; Models starting Serial No. OTCK9304053996
	505281	Disconnect Power Warning Label	Models through Serial No. OTCK9304053996
2	M410892	Warning Label	Control panel; Gas models; Models starting Serial No. OTCK9304053996
	N/A	Warning Label	Control panel; Electric and steam models; Models starting Serial No. OTCK9304053996
3	430527	Lint Compartment Label	D and S models; Lint screen on lint panel
	N/A	Lint Compartment Label	J models; Lint screen on lint panel
4	N/A	Lint Panel Warning Label	OM control suffix; Lint screen

N/A = Part no longer available

info@zipnasklade.ru
8(800)500-69-51

© Copyright, Alliance Laundry Systems LLC – DO NOT COPY or TRANSMIT

Reversing Control

MM and MT Control Suffixes

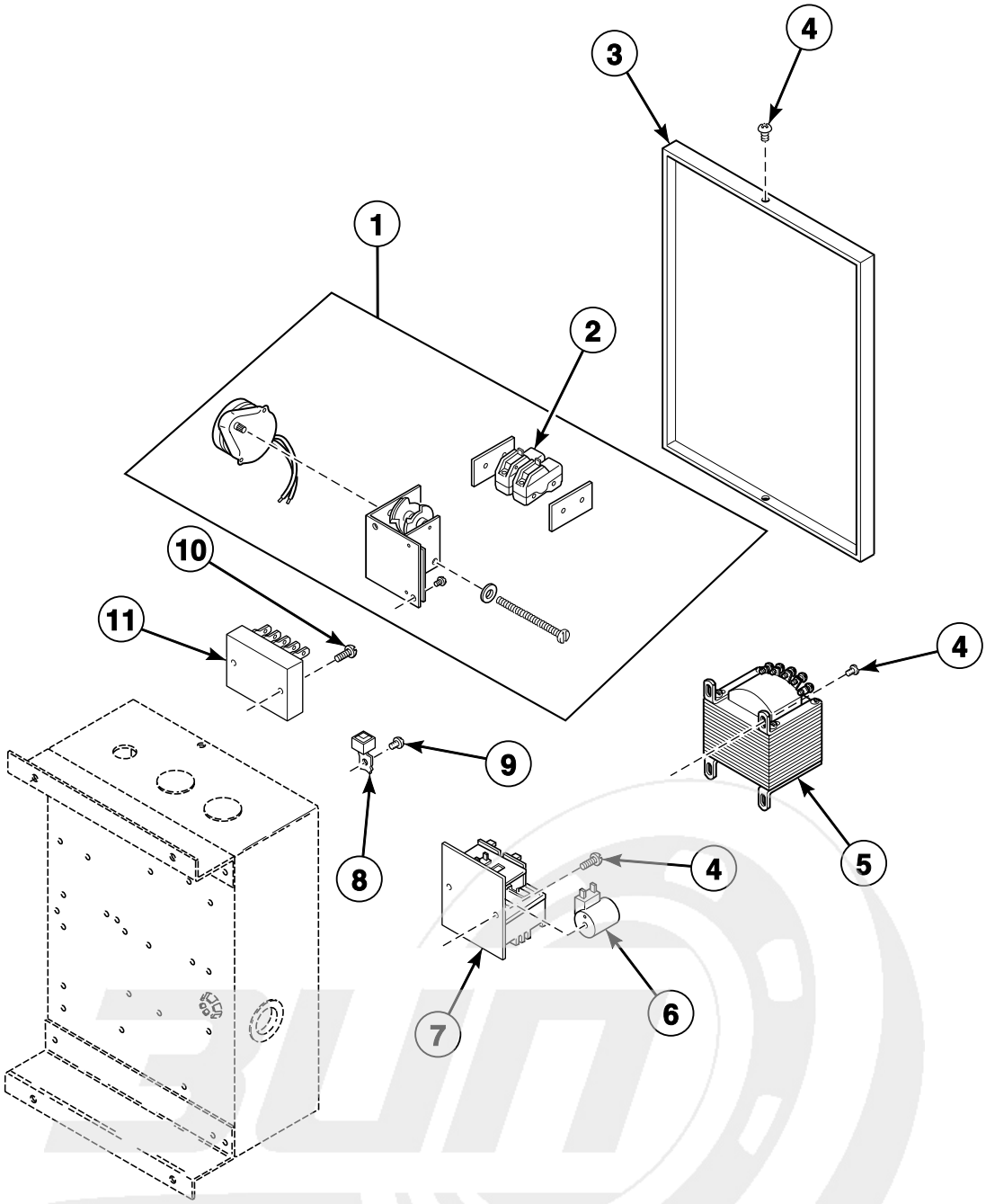

T493PZ3B_70410801

info@zipnasklade.ru
8(800)500-69-51

© Copyright, Alliance Laundry Systems LLC – DO NOT COPY or TRANSMIT

Reversing Control

REF	PART NO.	DESCRIPTION	COMMENTS
1	N/A	Reversing Timer	4 terminals; Models through Serial No. 699763YG
	N/A	Reversing Timer	6 terminals; Models starting Serial No. 699763YG through 9408085248
2	N/A	Switch	
3	M414351	Contactor Box Cover	
4	430497	Screw	
5	M401391P	Transformer	100-600 Volt/60 Hertz
6	M400915	Coil	208-240 Volt; For M400906 Reversing Contactor
7	M400906P	Reversing Contactor	208-240 Volt/60 Hertz; Models through Serial No. 9408085249
	N/A	Reversing Contactor	120 Volt/60 Hertz; Models through Serial No. 9408085249
	N/A	Reversing Contactor	240 Volt/50 Hertz; Models through Serial No. 9408085249
	M410515P	Reversing Contactor	240 Volt/50 Hertz; Models starting Serial No. 9408085249
	M4870P3	Contactor Kit	208-240 Volt/60 Hertz; Models starting Serial No. 9408085249; Reversing
	M4849P3	Reversing Contactor Kit	MM control suffix; Models starting Serial No. 9408085249
8	M411283	Ground Lug Connector	
9	M402917	Screw	Ground
10	N/A	Screw	
11	M411683	Reversing Timer	Solid State; Models starting Serial No. 9808085249

N/A = Part no longer available

info@zipnasklade.ru
8(800)500-69-51

© Copyright, Alliance Laundry Systems LLC – DO NOT COPY or TRANSMIT

Contactor Box Assembly Harnesses for OM Control Suffix

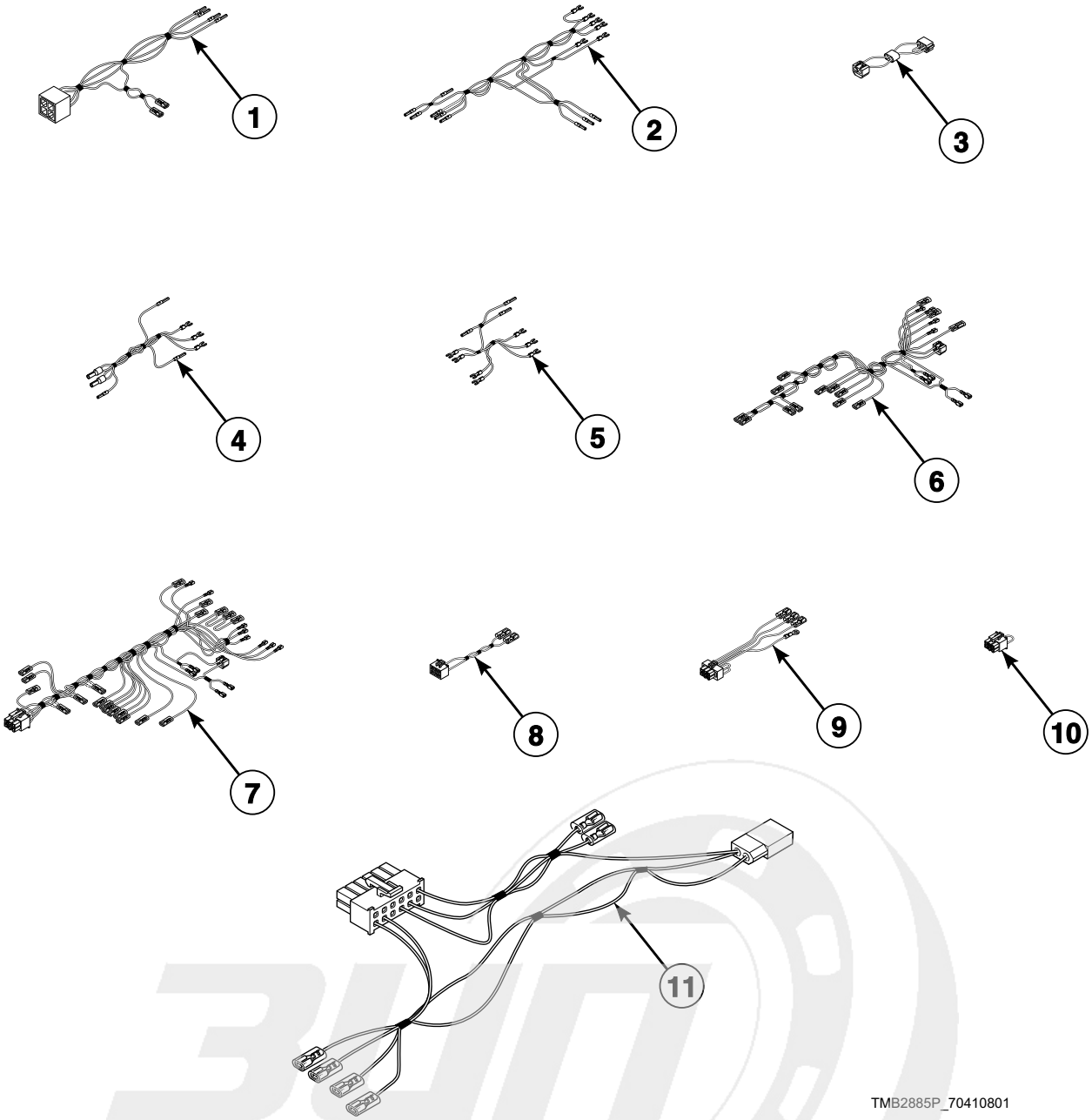

info@zipnasklade.ru
8(800)500-69-51

© Copyright, Alliance Laundry Systems LLC – DO NOT COPY or TRANSMIT

Contactor Box Assembly Harnesses for OM Control Suffix

REF	PART NO.	DESCRIPTION	COMMENTS
1	M414029	Transformer Harness Assembly	DC, JC and SC models; Secondary
	M414076	Transformer Harness Assembly	DC, JC and SC gas and steam models; Primary; 1 Phase
	M414028	Transformer Harness Assembly	DC, JC and SC electric and steam models; Primary; 3 Phase
2	M414032	Relay Harness Assembly	DC, JC and SC steam models
	M414150	Relay Harness Assembly	DC, JC and SC electric models; 380 or 415 Volt/50 Hertz/3 Phase
	N/A	Relay Harness Assembly	DC, JC and SC electric models; 230 Volt/50 Hertz/3 Phase; K2, K6 and K7
	M414224	Relay Harness Assembly	DC, JC and SC gas models; 230 Volt/50 Hertz/1 Phase; K2 and K3
3	M413505	Jumper Harness Assembly	CG, CSH, CSL and electric models; 120 Volt/60 Hertz
	M413507	Jumper Configuration Assembly	CG, CSH, CSL and electric models; 240 Volt/50 or 60 Hertz
	M413506	Jumper Harness Assembly	CG, CSH, CSL and electric models; 208 Volt/60 Hertz
	M413508	Jumper Harness Assembly	CG, CSH, CSL and electric models; 380 Volt/50 Hertz
	M413509	Jumper Harness Assembly	CG, CSH, CSL and electric models; 415 Volt/50 Hertz
	M413510	Jumper Configuration Assembly	CG, CSH, CSL and electric models; 480 Volt/60 Hertz
4	N/A	Jumper Assembly	Gas and steam models; 50 Hertz/1 Phase; Upper; Reversing
	M413695	Reversing Contactor Jumper Assembly	Gas and steam models; 50 Hertz/1 Phase; Lower; Reversing
	M414078	Jumper Harness Assembly	DC, JC and SC electric models; 50 Hertz/3 Phase
	N/A	Jumper Harness Assembly	DC, JC and SC electric models; 50 Hertz/3 Phase
	N/A	Jumper Harness Assembly	DC, JC and SC gas models; 50 Hertz/3 Phase
	N/A	Jumper Harness Assembly	DC, JC and SC models; Junction box; 240 Volt
5	N/A	Reversing Jumper Harness Assembly	DC, JC and SC electric models; 1 Phase; Upper; Reversing
	M412927	Reversing Jumper Harness Assembly	DC, JC and SC electric models; 1 Phase; Lower; Reversing
	M412928	Reversing Jumper Harness Assembly	Electric models; 3 Phase; Upper; Reversing
	M412929	Reversing Jumper Harness Assembly	Electric models; 3 Phase; Lower; Reversing
	M413624	Reversing Contactor Jumper Assembly	Reversing; 3 Phase; Upper
	N/A	Reversing Contactor Jumper Assembly	Reversing; 3 Phase; Lower
	M414034	Reversing Contactor Harness Assembly	DC, JC and SC models; Reversing
6	M413754	Control Box Harness Assembly	CG, CSH, CSL and electric models; 1 Phase; 3 wire
	M413683P	Control Box Harness Assembly	CG, CSH, CSL and electric models; 3 Phase
7	M413684P	Contactor Box Harness Assembly	CG, CSH, CSL and electric models; Reversing; 208-240, 380, 415 or 480 Volt/50 or 60 Hertz/3 Phase
8	N/A	Control Box Harness Assembly	CG, CSH, CSL and electric models; 50 or 60 Hertz/1 Phase; 2 wire
9	M413878	Network Capacitor Harness Assembly	
10	M413168	Bypass Harness Assembly	CG, CSH, CSL and electric models; Reversing
11	M413824	Control Box Harness Assembly	CG models; Australia

N/A = Part no longer available

info@zipnasklade.ru
8(800)500 69 51

© Copyright, Alliance Laundry Systems LLC – DO NOT COPY or TRANSMIT

Contactor Box Assembly (Drawing 1 of 10)

Gas, Steam and Electric Models with OM Control Suffix
120 Volt/60 Hertz/1 Phase; 240 Volt/50 Hertz/1 Phase

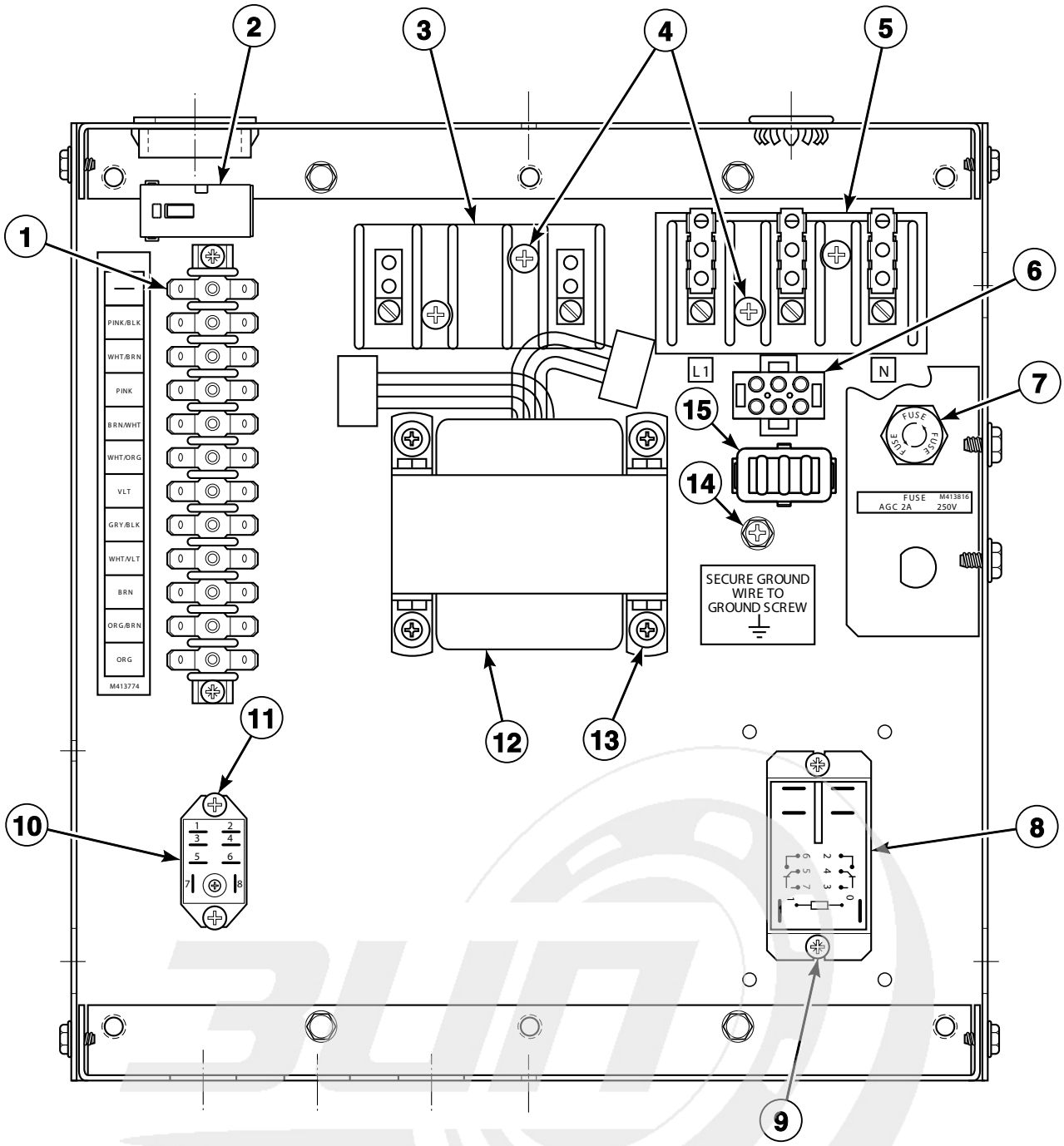

info@zipnasklade.ru
8(800)500-69-51

TMB2498P_70410801

© Copyright, Alliance Laundry Systems LLC – DO NOT COPY or TRANSMIT

Contactor Box Assembly (Drawing 1 of 10)

REF	PART NO.	DESCRIPTION	COMMENTS
1	M413542	Terminal Strip	
2	M413930P	Ferrite Core Assembly	Electric models
3	M405364	Terminal Block	2 pole
4	M405824	Screw	
5	430642	Terminal Block	3 pole
6	M413878	Network Capacitor Harness Assembly	
7	91024P	Fuse Receptacle	Use 23951 Nut to attach
	M413118	Fuse	250 Volt; 2 Amp
	M413623	Fuse	4 Amp; Secondary; Models DTB634 and STB634
	M414232	Fuse	3.5 Amp; Secondary; All other models
8	M413614P	Fan Contactor	Motor
9	51778	Screw	
10	431349	Relay	120 Volt/60 Hertz/1 Phase; Gas and steam models
	430746	Relay	240 Volt/50 Hertz/1 Phase
11	M400071	Screw	
12	M414228P	Transformer	
13	M400044	Screw	Use with 23951 Nut to attach item 12
14	M402917	Screw	Ground
15	M413863	Network Capacitor Assembly	

info@zipnasklade.ru
8(800)500-69-51

© Copyright, Alliance Laundry Systems LLC – DO NOT COPY or TRANSMIT

Contactor Box Assembly (Drawing 2 of 10)

All Electric Nonreversing Models; Gas and Steam Nonreversing Models with OM Control Suffix
208-240 Volt/60 Hertz/1 or 3 Phase; 380, 415 or 480 Volt/50 or 60 Hertz/3 Phase

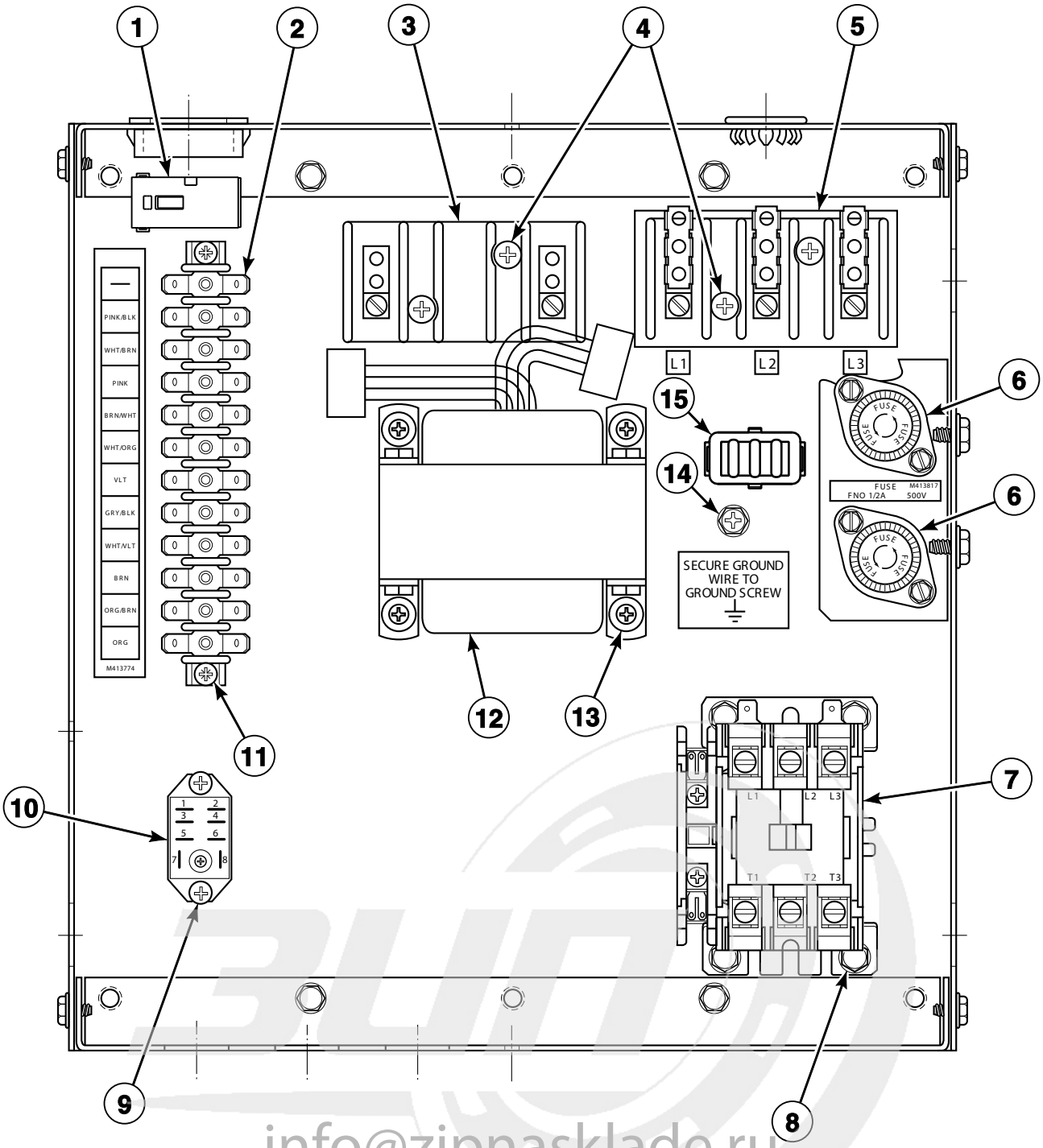

info@zipnasklade.ru
8(800)500-69-51

TMB2499P_70410801

© Copyright, Alliance Laundry Systems LLC – DO NOT COPY or TRANSMIT

Contactor Box Assembly (Drawing 2 of 10)

REF	PART NO.	DESCRIPTION	COMMENTS
1	M413930P	Ferrite Core Assembly	
2	M413542	Terminal Strip	
3	M405364	Terminal Block	2 pole
4	M405824	Screw	
5	430642	Terminal Block	3 pole
6	91024P	Fuse Receptacle	208-240 Volt/60 Hertz/1 or 3 Phase; Use 23951 Nut to attach
	M413544P	Fuse Holder	380, 415 or 480 Volt/50 or 60 Hertz/3 Phase
	M413621	Fuse	600 Volt; 0.5 Amp; 380, 415 or 480 Volt/50 or 60 Hertz/3 Phase
	M413118	Fuse	250 Volt; 2 Amp; 208-240 Volt/60 Hertz/1 or 3 Phase
	M413623	Fuse	4 Amp; Secondary; Models DTB634 and STB634
	M414232	Fuse	3.5 Amp; Secondary; All other models
7	M413614P	Fan Contactor	
8	51780	Screw	
9	M400071	Screw	
10	430746	Relay	208-240 Volt/60 Hertz
11	51778	Screw	
12	M414229P	Transformer	380, 415 or 480 Volt/50 or 60 Hertz/3 Phase
	M414228P	Transformer	208-240 Volt/60 Hertz/1 or 3 Phase
	M413100P	Transformer	208-240 Volt/60 Hertz/3 Phase
13	M400044	Screw	Use with 23951 Nut to attach item 12
14	M402917	Screw	Ground
15	M413863	Network Capacitor Assembly	

info@zipnasklade.ru
8(800)500-69-51

© Copyright, Alliance Laundry Systems LLC – DO NOT COPY or TRANSMIT

Contactor Box Assembly (Drawing 3 of 10)

Electric Nonreversing Models with OM Control Suffix
208-240 Volt/50 or 60 Hertz/3 Phase

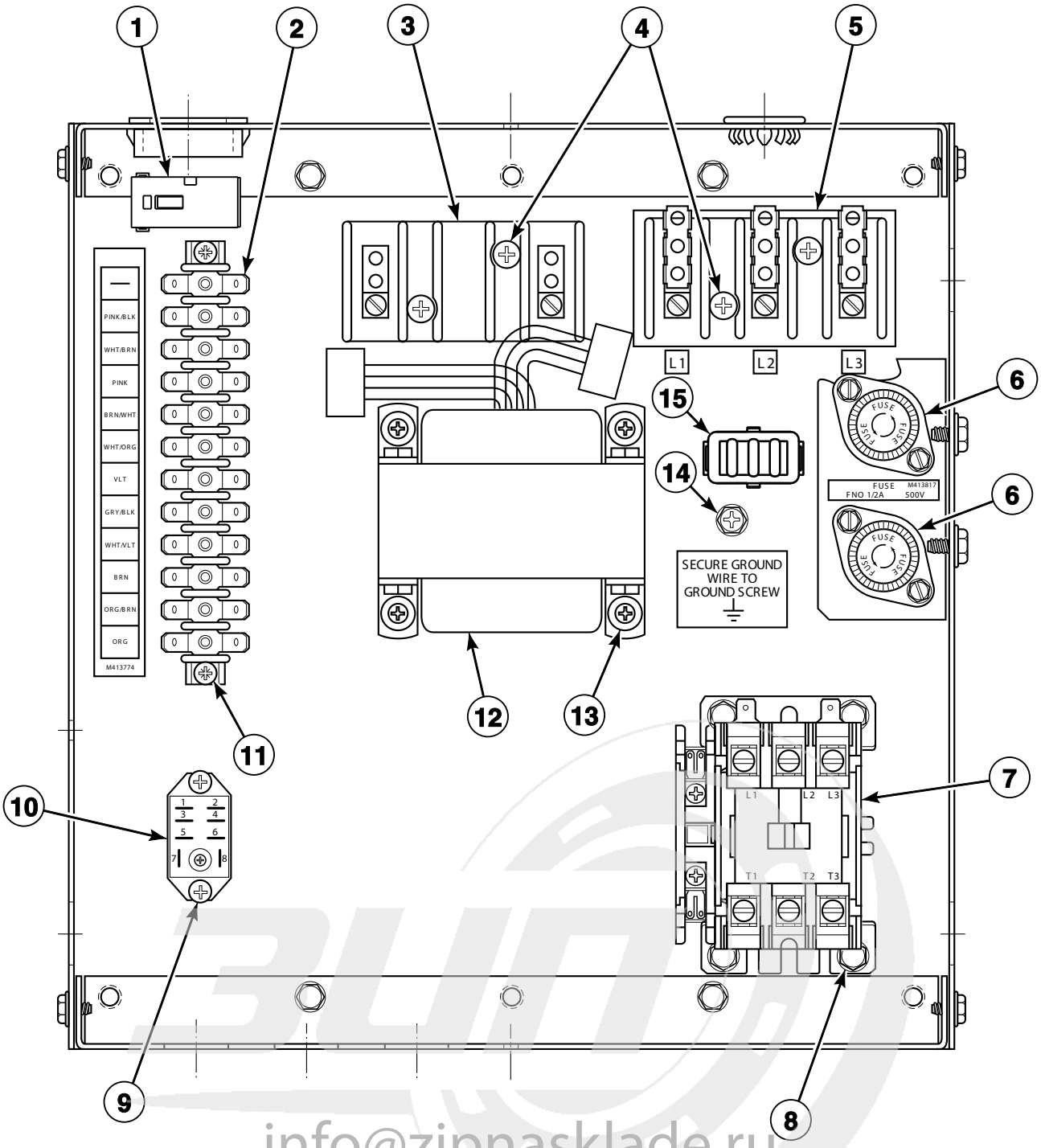

info@zipnasklade.ru
8(800)500-69-51

TMB2499P_70410801

© Copyright, Alliance Laundry Systems LLC – DO NOT COPY or TRANSMIT

Contactor Box Assembly (Drawing 3 of 10)

REF	PART NO.	DESCRIPTION	COMMENTS
1	M413930P	Ferrite Core Assembly	
2	M413542	Terminal Strip	
3	M405364	Terminal Block	2 pole
4	M405824	Screw	
5	430642	Terminal Block	3 pole
6	91024P	Fuse Receptacle	Use 23951 Nut to attach
	M413118	Fuse	250 Volt; 2 Amp
	M413623	Fuse	4 Amp; Secondary
	M414232	Fuse	3.5 Amp; Secondary
7	M413614P	Fan Contactor	
8	51778	Screw	
9	M400071	Screw	
10	430746	Relay	
11	51780	Screw	
12	M414228P	Transformer	
13	M400044	Screw	Use with 23951 Nut to attach item 12
14	M402917	Screw	Ground
15	M413863	Network Capacitor Assembly	

info@zipnasklade.ru
8(800)500-69-51

© Copyright, Alliance Laundry Systems LLC – DO NOT COPY or TRANSMIT

Contactor Box Assembly (Drawing 4 of 10)

Gas, Steam and Electric Reversing Models with OM Control Suffix
240 Volt/50 Hertz/1 Phase

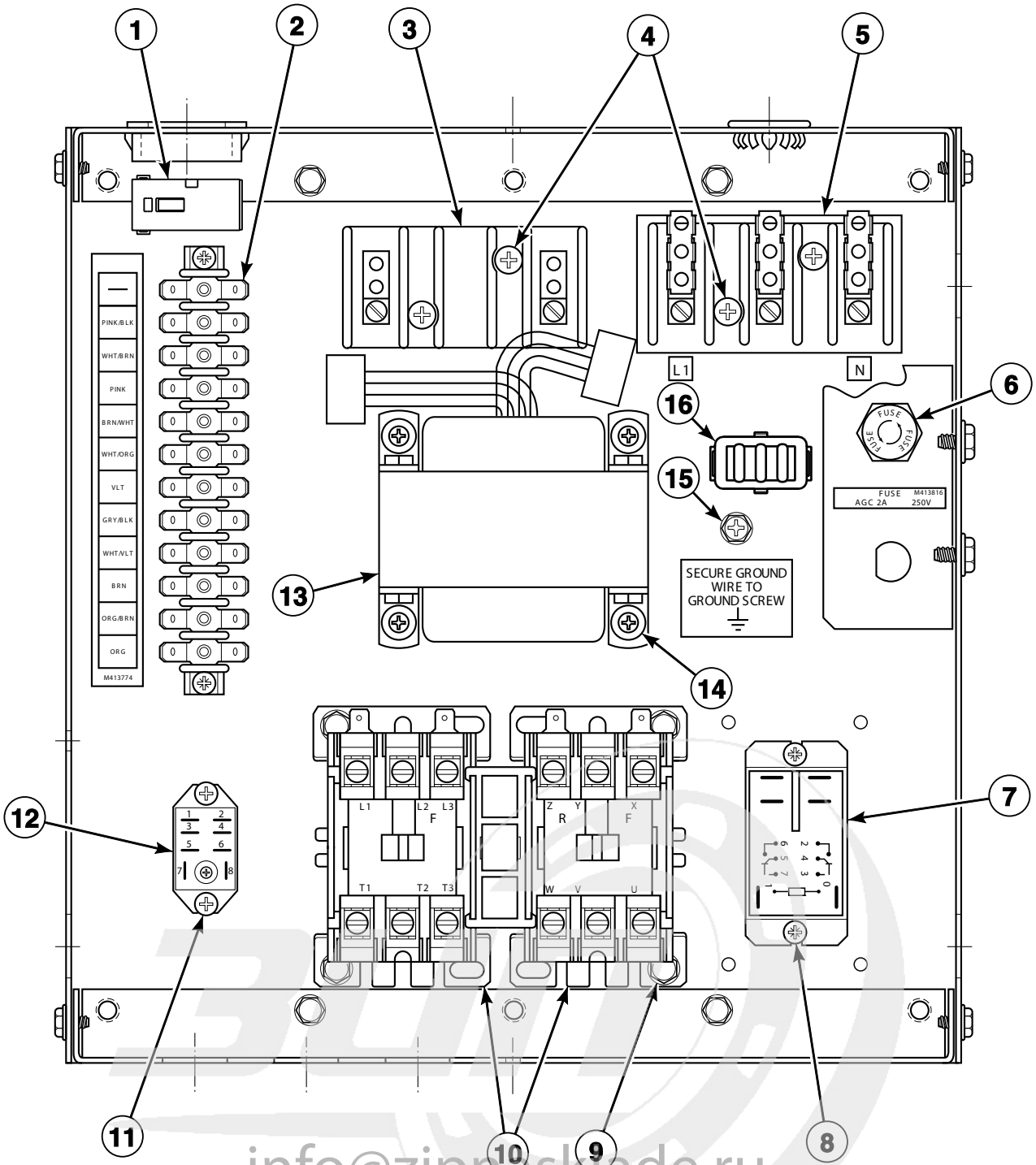

info@zipnasklade.ru
8(800)500-69-51

TMB2500P_70410801

© Copyright, Alliance Laundry Systems LLC – DO NOT COPY or TRANSMIT

Contactor Box Assembly (Drawing 4 of 10)

REF	PART NO.	DESCRIPTION	COMMENTS
1	M413930P	Ferrite Core Assembly	
2	M413542	Terminal Strip	
3	M405364	Terminal Block	2 pole
4	M405824	Screw	
5	430642	Terminal Block	3 pole
6	91024P	Fuse Receptacle	Use 23951 Nut to attach
	M413118	Fuse	250 Volt; 2 Amp
	M413623	Fuse	4 Amp; Secondary; Models DTB634 and STB634
	M414232	Fuse	3.5 Amp; Secondary; All other models
7	M413614P	Fan Contactor	Motor
8	51778	Screw	
9	51780	Screw	
10	M413615P	Reversing Contactor	
11	M400071	Screw	
12	430746	Relay	
13	M414228P	Transformer	
14	M400044	Screw	Use with 23951 Nut to attach item 13
15	M402917	Screw	Ground
16	M413863	Network Capacitor Assembly	

info@zipnasklade.ru
8(800)500-69-51

© Copyright, Alliance Laundry Systems LLC – DO NOT COPY or TRANSMIT

Contactor Box Assembly (Drawing 5 of 10)

Reversing Models with OM Control Suffix
208-240, 380, 415 or 480 Volt/50 or 60 Hertz/3 Phase

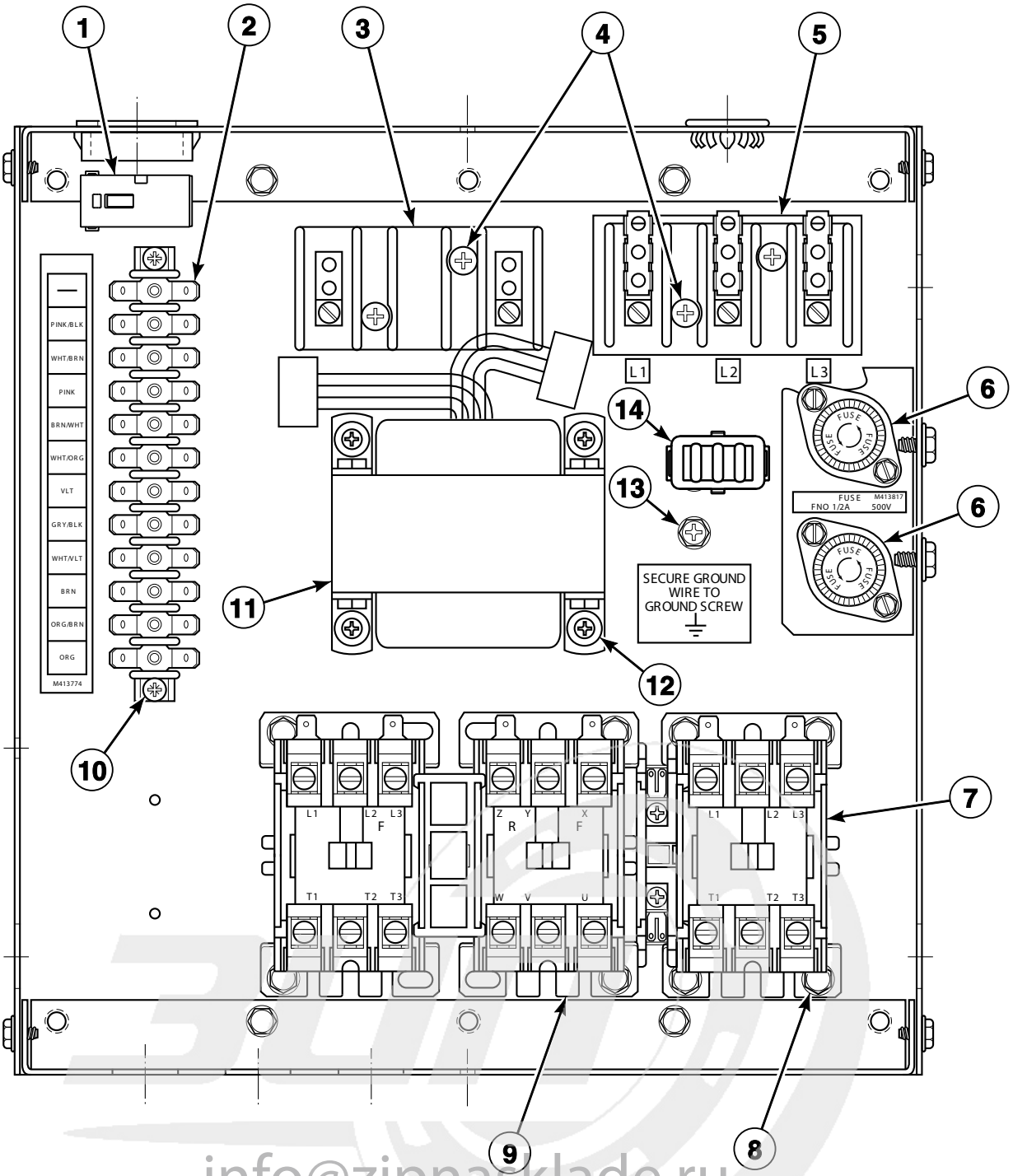

info@zipnasklade.ru
8(800)500-69-51

TMB2501P_70410801

© Copyright, Alliance Laundry Systems LLC – DO NOT COPY or TRANSMIT

Contactor Box Assembly (Drawing 5 of 10)

REF	PART NO.	DESCRIPTION	COMMENTS
1	M413930P	Ferrite Core Assembly	
2	M413542	Terminal Strip	
3	M405364	Terminal Block	2 pole
4	M405824	Screw	
5	430642	Terminal Block	3 pole
6	91024P	Fuse Receptacle	208-240 Volt/50 or 60 Hertz/3 Phase; Use 23951 Nut to attach
	M413544P	Fuse Holder	380, 415 or 480 Volt/50 or 60 Hertz/3 Phase
	M413118	Fuse	250 Volt; 2 Amp; 208-240 Volt/50 or 60 Hertz/3 Phase
	M413621	Fuse	600 Volt; 0.5 Amp; 380, 415 or 480 Volt/50 or 60 Hertz/3 Phase
	M413623	Fuse	4 Amp; Secondary; Models DTB634 and STB634
	M414232	Fuse	3.5 Amp; Secondary; All other models
7	M413614P	Fan Contactor	
8	51780	Screw	
9	M413615P	Reversing Contactor	
10	51778	Screw	
11	M414228P	Transformer	208-240 Volt/50 or 60 Hertz/3 Phase
	M414229P	Transformer	380, 415 or 480 Volt/50 or 60 Hertz/3 Phase
12	M400044	Screw	Use with 23951 Nut to attach item 11
13	M402917	Screw	Ground
14	M413863	Network Capacitor Assembly	

info@zipnasklade.ru
8(800)500-69-51

© Copyright, Alliance Laundry Systems LLC – DO NOT COPY or TRANSMIT

Contactor Box Assembly Harnesses for CD, MM and MT Control Suffixes

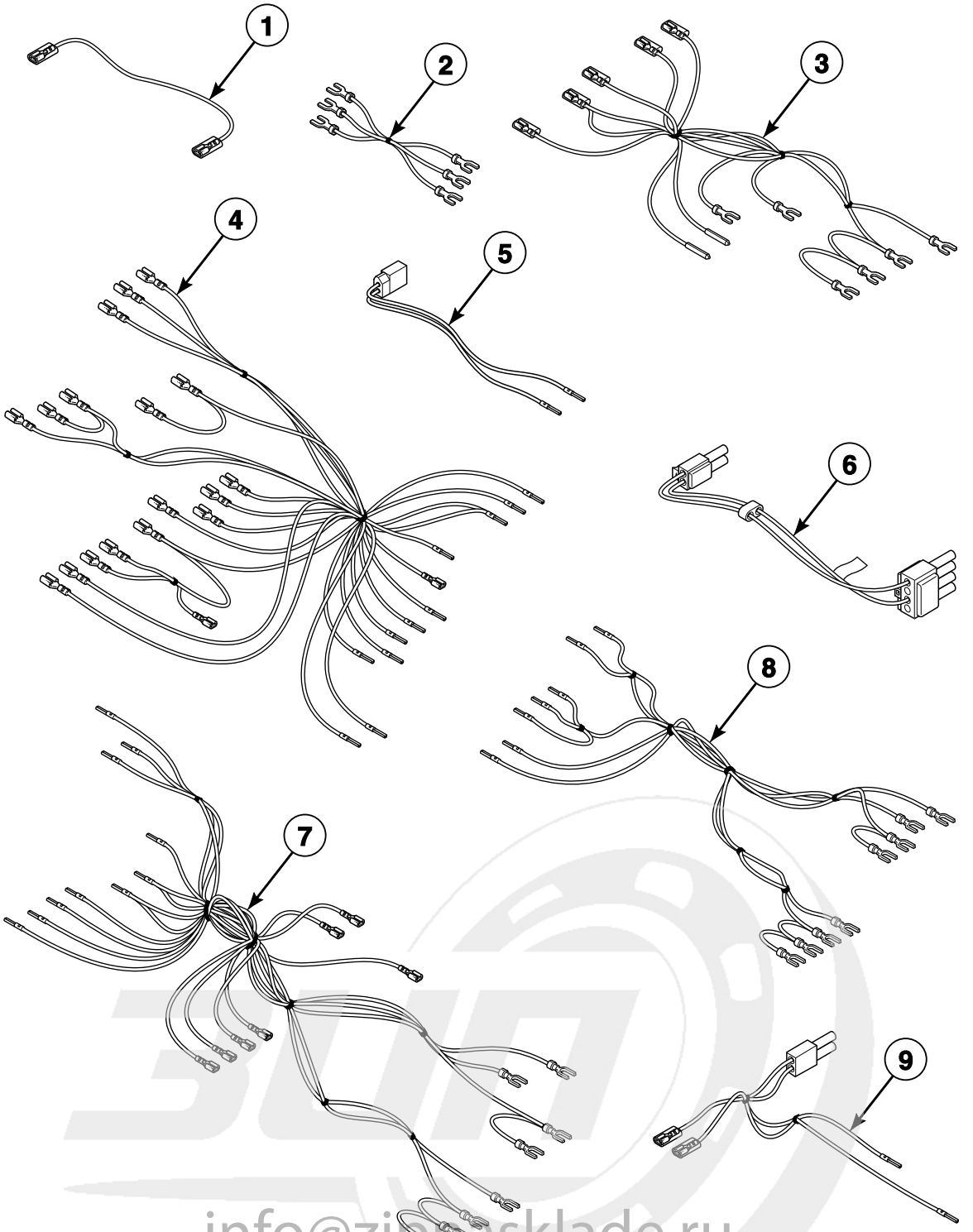

TMB2497P_70410801

info@zipnasklade.ru
8(800)500-69-51

© Copyright, Alliance Laundry Systems LLC – DO NOT COPY or TRANSMIT

Contactor Box Assembly Harnesses for CD, MM and MT Control Suffixes

REF	PART NO.	DESCRIPTION	COMMENTS
1	M412740	Jumper Cable Wire	Electric models; CD and MT control suffixes; 230 Volt/50 Hertz/1 Phase; 8 gauge; 5.75 inches
2	M412928	Reversing Jumper Harness Assembly	Electric models; MM and MT control suffixes; Upper; 208-240 Volt/60 Hertz/3 Phase
	M412929	Reversing Jumper Harness Assembly	Electric models; MM and MT control suffixes; Lower; 208-240 Volt/60 Hertz/3 Phase
3	N/A	Reversing Timer Harness Assembly	DC, JC and SC electric models; MM and MT control suffixes; 208-240 Volt/60 Hertz/3 Phase
	N/A	Reversing Timer Harness Assembly	DC, JC and SC electric models; CD and MT control suffixes, 230 Volt/50 Hertz/1 Phase
	N/A	Reversing Timer Harness Assembly	DC, JC and SC gas and steam models; MT control suffix; 230 Volt/50 Hertz/1 Phase
4	N/A	Relay Harness Assembly	Gas models; Coin; K2 and K3; 208-240 Volt/50 and 60 Hertz/1 or 3 Phase
	N/A	Relay Harness Assembly	DC, JC and SC steam models; MM and MT control suffixes; Coin; 1 Phase; K2; 208-240 Volt/50 and 60 Hertz/1 or 3 Phase
	M412636	Relay Harness Assembly	DC, JC and SC gas models; MT control suffix; 230 Volt/50 Hertz/1 Phase; K1, K2 and K3
	N/A	Relay Harness Assembly	DC, JC and SC steam models; MT control suffix; Reversing; K1 and K2; 230, 380 and 415 Volt/50 Hertz/1 and 3 Phase
5	M412642	Transformer Harness Assembly	DC, JC and SC models; MT control suffix; Reversing; Primary; 230-240, 380 and 415 Volt/50 Hertz/1 Phase
6	M413509	Jumper Harness Assembly	Steam models; MT control suffix; 415 Volt/50 Hertz/3 Phase
	N/A	Jumper Harness Assembly	DC, JC and SC gas and steam models; MT control suffix; Junction box; 240 Volt/50 Hertz/1 Phase
	N/A	Jumper Wire	Steam models; MT control suffix; Junction box; 380 and 415 Volt/50 Hertz/3 Phase
7	M412776P	Relay Harness Assembly	DC, JC and SC electric models; Dual timer; CD and MT control suffixes; K1; 230 Volt/50 Hertz/1 Phase
8	M412777	Relay Harness Assembly	Electric models; CD and MT control suffixes; Coin; 230 Volt/50 Hertz/1 Phase
9	M412641	Transformer Harness Assembly	DC, JC and SC electric models; CD and MT control suffixes; Secondary; 230 Volt/50 Hertz/1 Phase

N/A = Part no longer available

info@zipnasklade.ru
8(800)500-69-51

© Copyright, Alliance Laundry Systems LLC – DO NOT COPY or TRANSMIT

Contactor Box Assembly (Drawing 6 of 10)

Gas, Steam and Electric Reversing Models with MM or MT Control Suffixes
208-240 Volt/60 Hertz/3 Phase

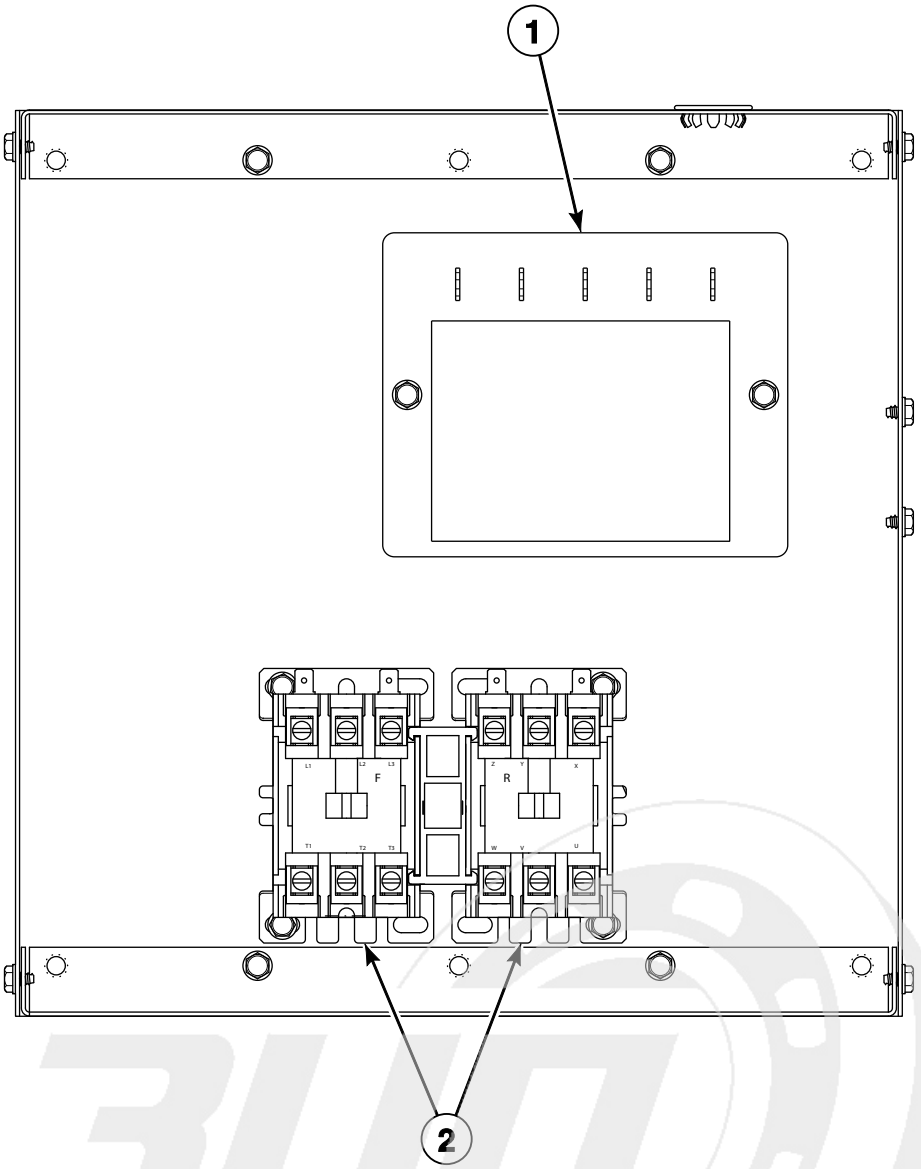

TMB2264P_70410801

info@zipnasklade.ru
8(800)500-69-51

© Copyright, Alliance Laundry Systems LLC – DO NOT COPY or TRANSMIT

Contactor Box Assembly (Drawing 6 of 10)

REF	PART NO.	DESCRIPTION	COMMENTS
	M414351	Contactor Box Cover	
1	M411683	Reversing Timer	Models starting Serial No. 9408xxxx
	N/A	Reversing Timer	Models starting Serial No. 699763Y6 through 9408xxxx
	N/A	Reversing Timer	Models through Serial No. 699762Y6
2	M4849P3	Reversing Contactor Kit	120 Volt
	M4870P3	Contactor Kit	240 Volt

N/A = Part no longer available

info@zipnasklade.ru
8(800)500-69-51

© Copyright, Alliance Laundry Systems LLC – DO NOT COPY or TRANSMIT

Contactor Box Assembly (Drawing 7 of 10)

Gas Models with MT Control Suffix
230 Volt/50 Hertz/1 Phase

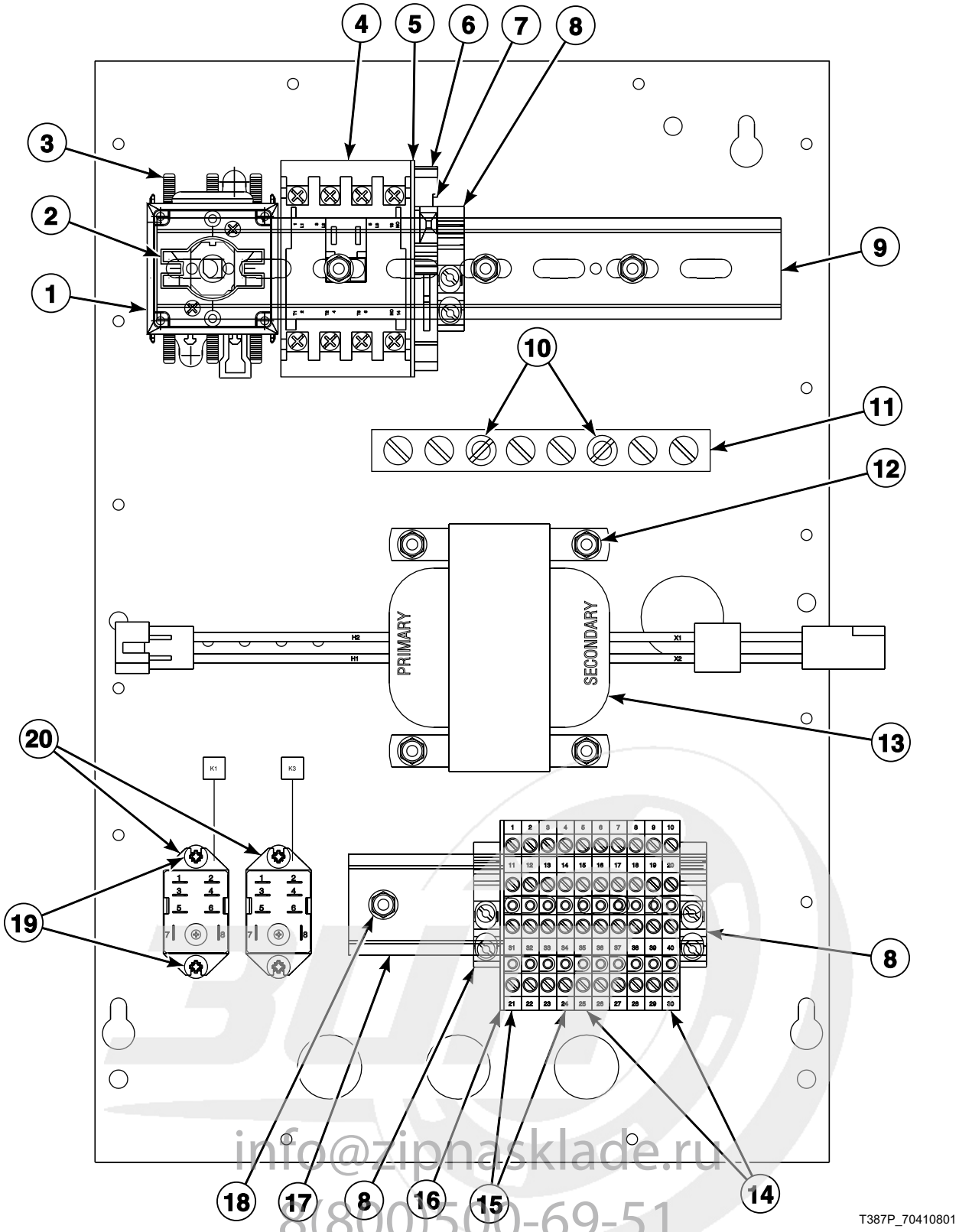

info@zipnasklade.ru
8(800)500-69-51

© Copyright, Alliance Laundry Systems LLC – DO NOT COPY or TRANSMIT

Contactor Box Assembly (Drawing 7 of 10)

REF	PART NO.	DESCRIPTION	COMMENTS
1	M412187P	Mounting Switch Base	20 Amp; Includes 2 terminal blocks
2	M412370	Extension Handle	Includes 2 screws
3	M412366	Finger Guard	20 Amp
4	70323701P	Contactor	9 Amp
5	M412540	End Section	
6	M412537	Terminal Block	
7	502593	Fuse	
8	70121001	End Stop	230 Volt
9	N/A	Din Rail	215.9 mm
10	M412688	Nut	
11	M412656	Ground Buss Assembly	
12	33562	Screw	
13	M412477P	Transformer	230 Volt
14	M412631	Terminal Block	2 circuit
15	M412632	Terminal Block	1 circuit
16	M412633	End Barrier	
17	N/A	Din Rail	127 mm
18	51780	Screw	
19	501086	Screw	
20	M412534	Relay	24 Volt

N/A = Part no longer available

info@zipnasklade.ru
8(800)500-69-51

© Copyright, Alliance Laundry Systems LLC – DO NOT COPY or TRANSMIT

Contactor Box Assembly (Drawing 8 of 10)

Steam Models with MT Control Suffix
230 Volt/50 Hertz/1 Phase

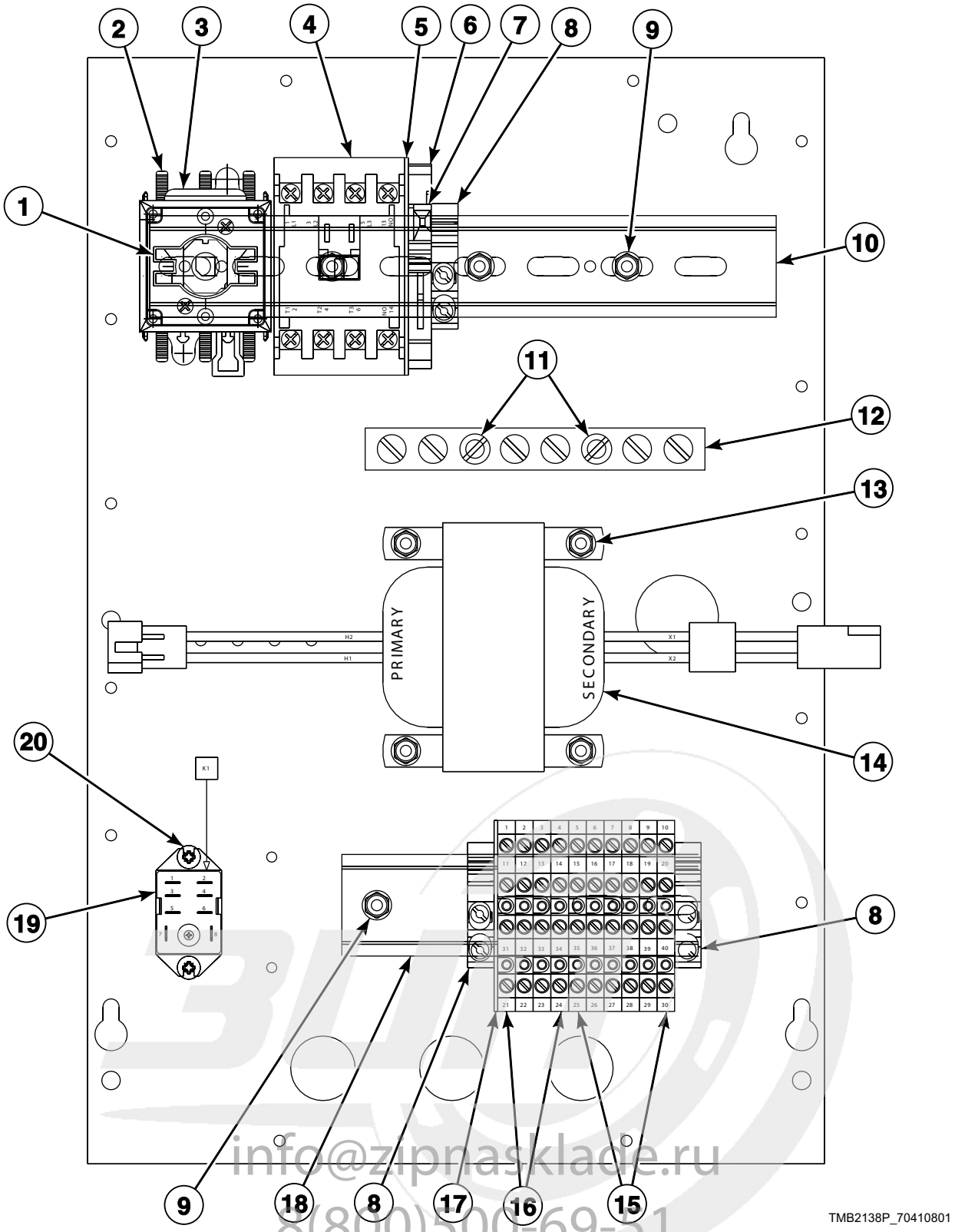

info@zipnasklade.ru
8(800)500-69-51

© Copyright, Alliance Laundry Systems LLC – DO NOT COPY or TRANSMIT

Contactor Box Assembly (Drawing 8 of 10)

REF	PART NO.	DESCRIPTION	COMMENTS
1	M412370	Extension Handle	Includes 2 screws; Cut-to-length; 20 Amp
2	M412366	Finger Guard	20 Amp
3	M412187P	Mounting Switch Base	Includes 2 terminal blocks; 20 Amp
4	70323701P	Contactor	9 Amp
5	M412540	End Section	
6	M412537	Terminal Block	Primary; 230 Volt
7	502593	Fuse	
8	70121001	End Stop	230 Volt
9	51780	Screw	
10	N/A	Din Rail	215.9 mm
11	M412688	Nut	Used on back of item 12
12	M412656	Ground Buss Assembly	
13	33562	Screw	
14	M412477P	Transformer	230 Volt
15	M412631	Terminal Block	2 circuit
16	M412632	Terminal Block	1 circuit
17	M412633	End Barrier	
18	N/A	Din Rail	127 mm
19	M412534	Relay	24 Volt
20	501086	Screw	

N/A = Part no longer available

info@zipnasklade.ru
8(800)500-69-51

© Copyright, Alliance Laundry Systems LLC – DO NOT COPY or TRANSMIT

Contactor Box Assembly (Drawing 9 of 10)

Steam Models with MT Control Suffix
380 or 415 Volt/50 Hertz/3 Phase

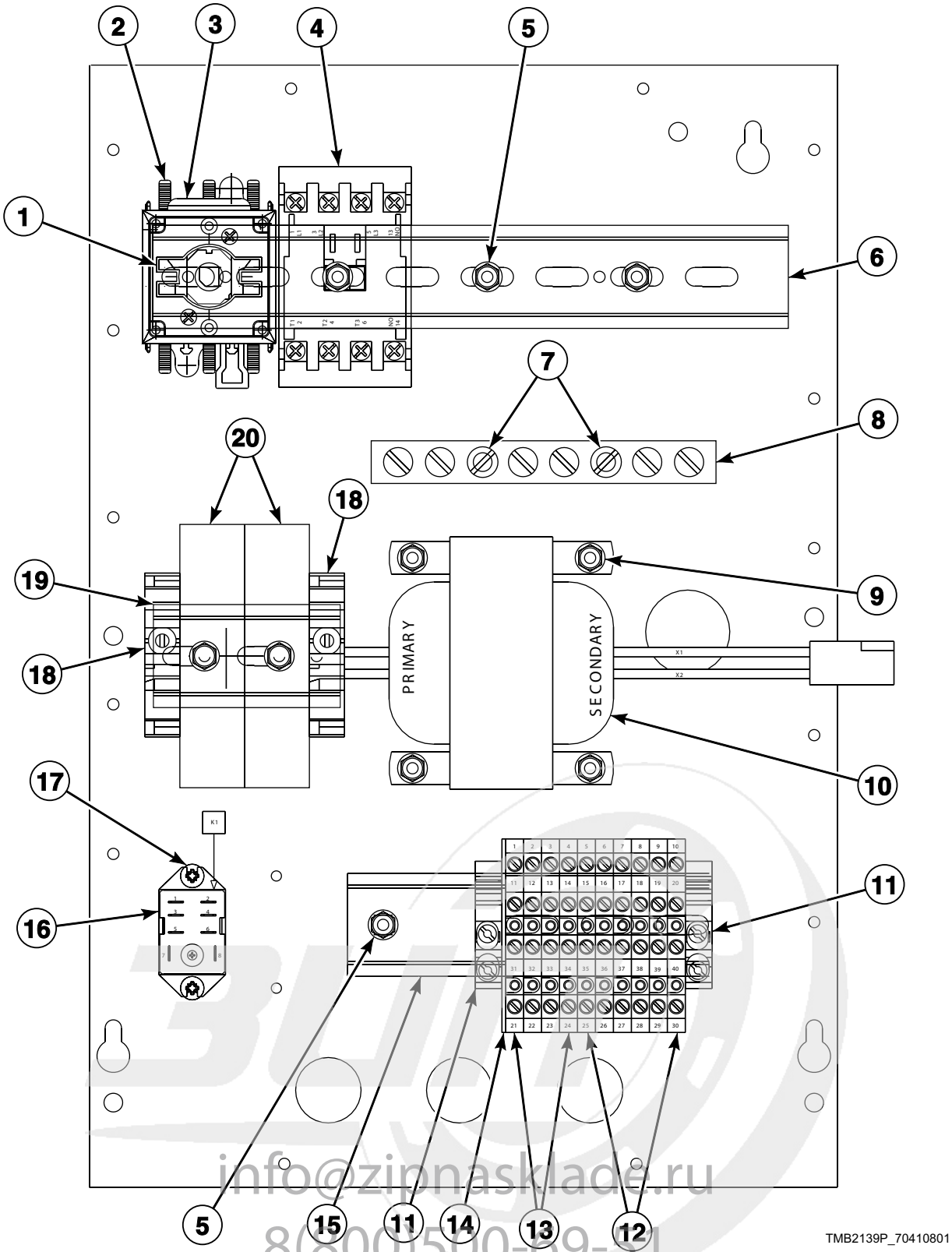

info@zipnasklade.ru
8(800)500-69-51

© Copyright, Alliance Laundry Systems LLC – DO NOT COPY or TRANSMIT

Contactor Box Assembly (Drawing 9 of 10)

REF	PART NO.	DESCRIPTION	COMMENTS
1	M412370	Extension Handle	Includes 2 screws
2	M412366	Finger Guard	20 Amp
3	M412187P	Mounting Switch Base	Includes 2 terminal blocks; 20 Amp
4	70323701P	Contactor	9 Amp
5	51780	Screw	
6	N/A	Din Rail	215.9 mm
7	M412688	Nut	
8	M412656	Ground Buss Assembly	
9	33562	Screw	
10	M412412P	Transformer	400 Volt
11	70121001	End Stop	230 Volt
12	M412631	Terminal Block	2 circuit
13	M412632	Terminal Block	1 circuit
14	M412633	End Barrier	
15	N/A	Din Rail	127 mm
16	M412534	Relay	24 Volt
17	501086	Screw	
18	M412615	End Stop	
19	N/A	Din Rail	
20	M412538	Terminal Block	
	M412996	Fuse	Use inside terminal block

N/A = Part no longer available

info@zipnasklade.ru
8(800)500-69-51

© Copyright, Alliance Laundry Systems LLC – DO NOT COPY or TRANSMIT

Contactor Box Assembly (Drawing 10 of 10)

Electric Models with CD and MT Control Suffixes
230 Volt/50 Hertz/1 Phase

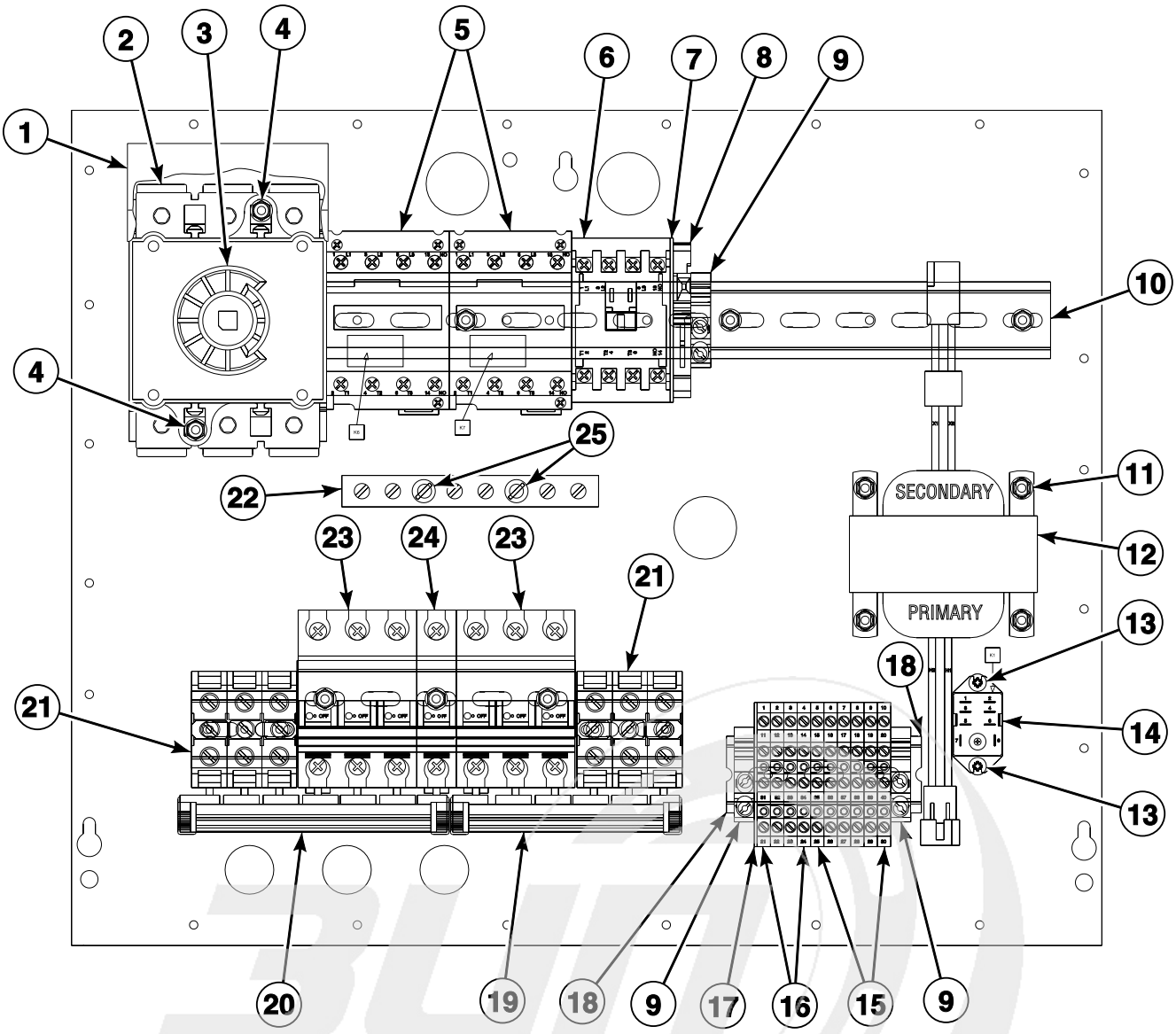

info@zipnasklade.ru
8(800)500-69-51

© Copyright, Alliance Laundry Systems LLC – DO NOT COPY or TRANSMIT

Contactor Box Assembly (Drawing 10 of 10)

REF	PART NO.	DESCRIPTION	COMMENTS
1	M412367	Finger Guard	100 Amp
2	M412186	Mounting Switch Base	Includes 2 terminal blocks; 100 Amp
3	M412371P	Extension Handle	Includes 2 screws
4	33562	Screw	
5	70343301P	Contactor	50 Amp; Electric
6	70323701P	Contactor	9 Amp; Motor
7	M412540	End Section	230 Volt
8	M412537	Terminal Block	Primary; 230 Volt
	502593	Fuse	250 Volt; 0.4 Amp; Use inside terminal block
9	70121001	End Stop	230 Volt
10	N/A	Din Rail	330.2 mm
11	51780	Screw	
12	M412477P	Transformer	240 Volt
13	501086	Screw	Dual timer
14	M412534	Relay	Dual timer; 24 Volt
15	M412631	Terminal Block	2 circuit
16	M412632	Terminal Block	1 circuit
17	M412633	End Barrier	
18	M412692	Din Rail	88.9 mm
19	N/A	Buss Bar Assembly	6 position
20	N/A	Buss Bar Assembly	7 position
21	M412045P	Terminal Block	3 pole
22	M412656	Ground Buss Assembly	
23	M412406	Circuit Breaker	3 pole; 40 Amp
24	M412401	Circuit Breaker	1 pole; 8 Amp
25	M412688	Nut	Use on back of item 22

N/A = Part no longer available

info@zipnasklade.ru
8(800)500-69-51

© Copyright, Alliance Laundry Systems LLC – DO NOT COPY or TRANSMIT

Accessory Box

Electric Models with OM Control Suffix

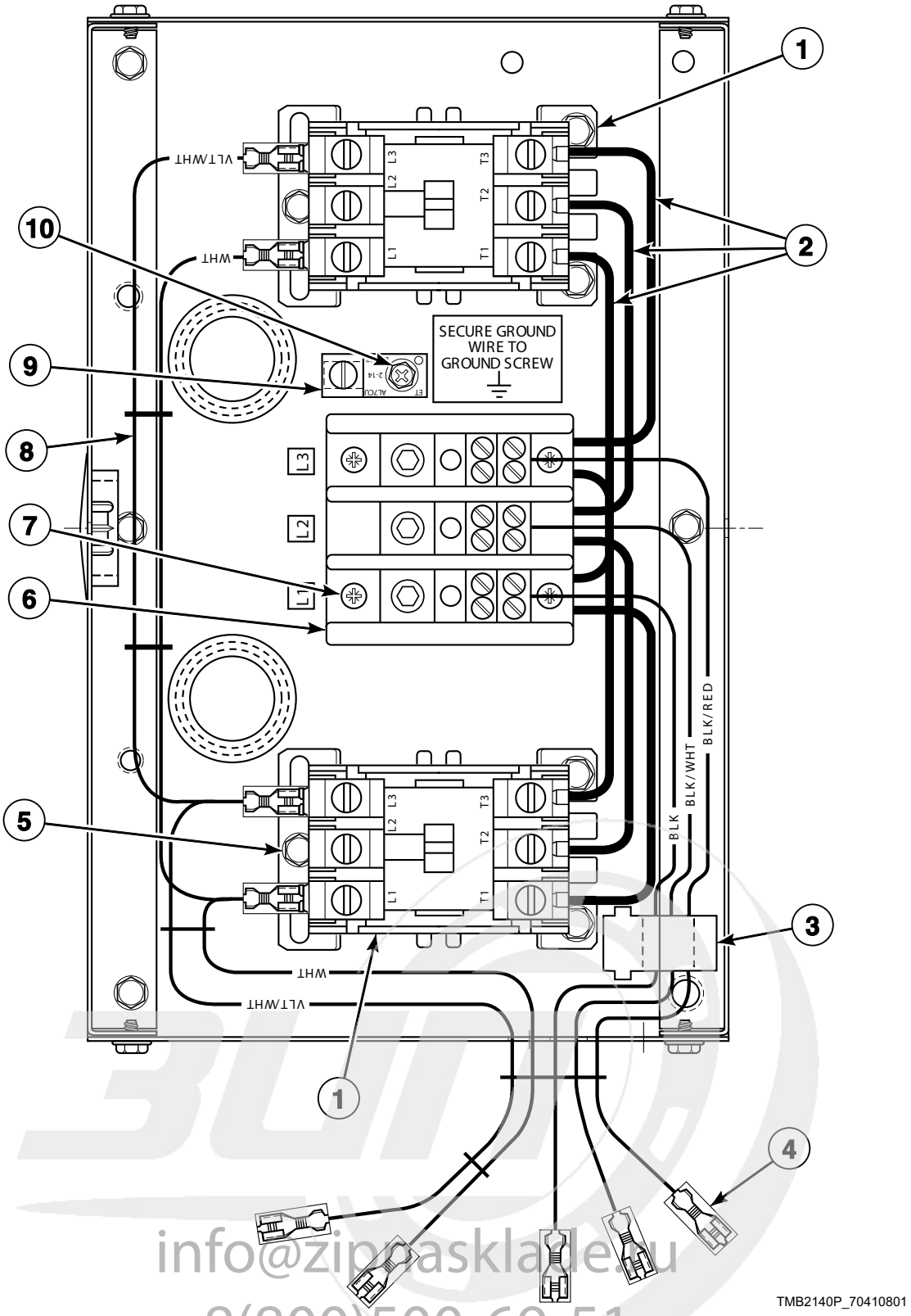

info@zipnaskladu.ru
8(800)500-69-51

© Copyright, Alliance Laundry Systems LLC – DO NOT COPY or TRANSMIT

Accessory Box

REF	PART NO.	DESCRIPTION	COMMENTS
1	70343301P	Contactor	2 required for 208-240 Volt
2	M413933	Jumper Cable Assembly	6 required for 208-240 Volt/50 or 60 Hertz/3 Phase; 4 required for 240 Volt/50 Hertz/1 Phase; 3 required for 380 or 480 Volt/50 or 60 Hertz/3 Phase
	M413934	Jumper Cable Assembly	2 required for 240 Volt/50 Hertz/1 Phase
3	M413930P	Ferrite Core Assembly	
4	44129001	Accessory Box Harness Assembly	240 Volt/50 Hertz/1 Phase
	44129101P	Accessory Box Harness Assembly	208-240 Volt/50 or 60 Hertz/3 Phase; 380 or 480 Volt/50 or 60 Hertz/3 Phase
5	51780	Screw	For item 1
6	M413864	Terminal Block	2 pole; 240 Volt/50 Hertz/1 Phase
	M413865	Terminal Block	3 pole; 3 Phase
7	39733	Screw	
8	44129201P	Jumper Harness	208-240 Volt/50 or 60 Hertz/1 or 3 Phase
9	M411283	Ground Lug Connector	
10	M402917	Screw	Ground

info@zipnasklade.ru
8(800)500-69-51

© Copyright, Alliance Laundry Systems LLC – DO NOT COPY or TRANSMIT

Junction Box

MT or MM Control Suffixes for Reversing and Nonreversing Models

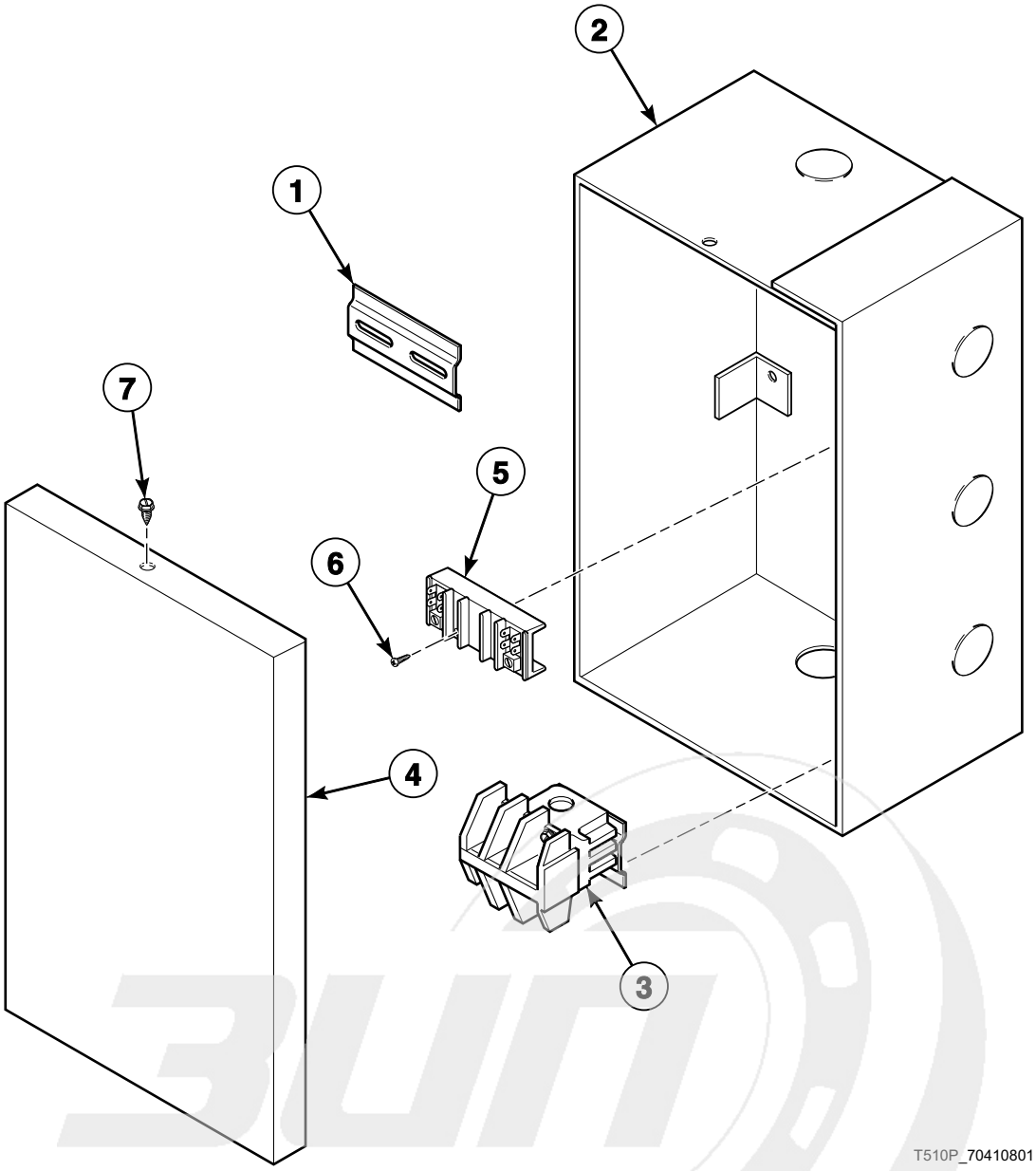

info@zipnasklade.ru
8(800)500-69-51

© Copyright, Alliance Laundry Systems LLC – DO NOT COPY or TRANSMIT

Junction Box

REF	PART NO.	DESCRIPTION	COMMENTS
1	N/A	Din Rail	
2	N/A	Junction Box Assembly	
3	M410529	Contactor	120 Volt
	M410457P	Contactor	208-240 or 480 Volt
	431349	Relay	120 Volt/50 or 60 Hertz; MM control suffix (CRI)
4	N/A	Junction Box Cover	
5	M405364	Terminal Block	120 Volt; Gas and steam models
	M405363	Terminal Block	208-240 Volt; Gas models
6	M405824	Screw	
7	51780	Screw	

N/A = Part no longer available

info@zipnasklade.ru
8(800)500-69-51

© Copyright, Alliance Laundry Systems LLC – DO NOT COPY or TRANSMIT

Notes

info@zipnasklade.ru
8(800)500-69-51

© Copyright, Alliance Laundry Systems LLC – DO NOT COPY or TRANSMIT

Parts Index

A

Accessory Box Harness Assembly
44129001 143
44129101P 143

Actuator Switch
M412423 73

Airflow Switch
M400944 73

Airflow Switch Assembly
M401883 73

Airflow Switch Bracket
M409202 73

Airflow Switch Guard
M410544 73

Airflow Switch Handy Box
M403235 73

Airflow Switch Harness Assembly
M412575 73
M413689 73

Airflow Switch Insulator Barrier
M400712 73

Airflow Switch Vane
M413475 73

Airflow Switch Vane Lever
M400753 73

Anti-Torque Ring
M400605 ..... 75, 79, 81, 85, 89, 91, 99

B

Ball Bearing
M400592 45
M401375P 51, 55
M413921P 43
M413922P 43
44041901P 43

Bearing
F100136P 43

Bearing Retainer
M401370 ..... 51, 55

Belt
M401182P 45, 47
M412090 53
M412981 53

Belt Drive Conversion Kit
BDK5075 45
BDK5075R 43, 51

Belt Guard
M413008 ..... 57, 67
M413541 ..... 51, 69

Belt Guard Assembly
M44132402 53
44132401 ..... 45, 47
44132402 51
44132405 ..... 45, 47
44132407 53

Blower Cover
M413399 65

Bolt
M400650 43
M401393 57
M412119 49
M412475 45

Bracket
M406936 89

Bumper
M400795 113

Burner Assembly
M405919 ..... 85, 89, 91
M410541P 85, 89, 91, 97, 99

Burner Kit
M4448P3 ..... 75, 79, 81

Burner Orifice
M400918 75
M400997 101
M400998 101
M400999 101
M401001 101
M401002 101
M401003 101
M401011 101
M401014 101
M401016 101
M401017 101
M401019 101
M401020 101
M401021 101
M401022 101
M401025 101
M401027 101
M402598 79
M402701 79
M402997 101
M403017 101
M406184 101
Q8152 75

Bushing
H87529111P 65
M403432P 43
M412086P 53
M412885P 53
M412917P 53

Bypass Harness Assembly
M413168 ..... 19, 29, 119

C

Cabinet Limit Harness Assembly
M412670 113
M413693P 113

Cam and Screw
M400595 39

Card Reader and Bracket Assembly
510068P 23

Card Reader Harness Assembly
70211801 23

Card Reader Network Harness Assembly
70206601 23

Chain Connecting Link
M401360P 45

N/A items do not appear in index.

info@zipnaskladе.ru
8(800)500 69 51

© Copyright, Alliance Laundry Systems LLC – DO NOT COPY or TRANSMIT

Chain Guard Assembly
M409350 45
Chain Sleeve
M400755P 45
Chain Sprocket
M401369P 45
Channel Ignition Kit
607P3 97
Circuit Board Support
M405979 ..... 29, 85
Circuit Breaker
M412401 141
M412406 141
Clip
M400974 111
M400976 73
M400984 33
Coil
M400915 117
Coil Spring
M402455 15
Coin Carrier Spring
M405138A 15
Coin Drop
70256402P 25
70441601P 25
Coin Drop Assembly
38475 25
38519 25
Coin Meter
M402508-12 ..... 7, 15
M402508-14 ..... 7, 15
M402508-34 ..... 7, 15
M402508-36 ..... 7, 15
M402508-45 ..... 7, 15
M405138P 7, 15
M412546 7
Coin Meter Drive
M400754 15
Coin Retainer Spring
M406297 15
Coin Vault Assembly
44102801 31
Coin Vault Jumper Wire
M414305P 25
Communication Board
210095P 27
Communication Cable
M414875P 21
Contact Block
M412230 13
44018701 13
Contactor
M400905P 109
M405116P 109
M410457P 145
M410529 145
70323701P 135, 137, 139, 141
70343301P 141, 143
Contactor Box Cover
M414351 ..... 109, 117, 133
Contactor Box Harness Assembly
M413684P 119
Contactor Kit
M4870P3 ..... 117, 133
Control Box Harness Assembly
M413678P 19, 89, 91
M413679 19
M413680 19
M413683P 119
M413754 119
M413824 ..... 19, 119
M413993 19
Control Box Wire Harness Assembly
M411073 17
Control Harness
M405871P 7
Control Kit
505905P 23, 25
70228401P 19
Control Panel Assembly
M410660 11
M410680 11
M413315 11
M413316 11
M414204 13
M414906 11
Control Panel Retainer
M401301 ..... 7, 9, 13
M401302 ..... 7, 9, 13
Control Panel Wire Harness Assembly
M403924P 7, 9, 13
M410488 ..... 9, 13
Control Plate Assembly
70175807 25
70348801 23
Control Wire Harness Assembly
M410487 ..... 9, 13
Counterweight
M400822 73
Cover Plate
M401362 57
Cylinder
M400439P 41
M400440P 41
M401985P 41
M402517P 41
M405365P 41
Cylinder and Trunnion Assembly
M406906P 41
M409015P 41
M409090P 41
M409091 41
44037101 41
44037201 41
44068901P 41
44069001 41
Cylinder Assembly
M405009P 41
Cylinder Motor Harness
M412745 ..... 67, 69
Cylinder Motor Harness Assembly
M412573 ..... 67, 69
M413687 ..... 67, 69
M413688 ..... 67, 69
Cylinder, Trunnion and Bearing Housing Kit
M4819P3 41
M4820P3 41
M4821P3 41

N/A items do not appear in index.

info@zipnasklade.ru
8(800)500-69-51

© Copyright, Alliance Laundry Systems LLC – DO NOT COPY or TRANSMIT

D

Data Connector, 3 Circuit
210155 27
Deflector Shield
M402746 81
Din Rail
M412692 141
Diode Logic Board
M405897P 29, 85
Disconnect Power Warning Label
505281 115
Door Assembly
M400447P 35
M410887 35
430475 35
Door Glass
M400784P 35
70133601P 35
Door Glass Seal Kit
70211901P 35
Door Handle
M400133 35
430117 35
Door Hinge Assembly
M402714* 35
Door Latch
M401223 35
Door Ring Gasket
M406129 35
Door Safety Switch Kit
M4842P3 37
Door Switch
M400952 29
Door Switch Harness Assembly
M412459 29
Door Switch Rod
M400603 35
Double V Sheave
M412916 53
Drive Rivet
M400713 33
Drum Idler Wheel Assembly
430619 49

E

Electric Hood
M412316 105
Electronic Coin Control Kit
M4686P3 25
Emergency Stop Kit
44018701P 13
End Barrier
M412633 ..... 135, 137, 139, 141
End Section
M412540 ..... 135, 137, 141
End Stop
M412615 139
70121001 ..... 135, 137, 139, 141
Exhaust Thimble
M413173 113
Exhaust Thimble Assembly
M412288 113
Extension Handle
M412370 ..... 135, 137, 139
M412371P 141
Extension Spring
M412120 ..... 47, 49

F

Fan and Bushing Assembly
M414546 65
Fan Contactor
M413614P 121, 123, 125, 127, 129
Fan Kit
M4936P3 57
Fan Motor
44046001P 61, 63
Fan Motor Harness Assembly
M413281 63
M413686 ..... 59, 61, 63
Felt Pad
M402144 41
Ferrite Core Assembly
M413930P 121, 123, 125, 127, 129, 143
Finger Guard
M412366 ..... 135, 137, 139
M412367 141
Flexible Coupler
M412551 37
Front Panel Assembly
M410758LP 35
M410877*P 35
M411129*P 35
M411132P 35
M412792*P 35
Fuse
M412996 139
M413118 ..... 121, 123, 125, 127, 129
M413621 ..... 123, 129
M413623 ..... 121, 123, 125, 127, 129
M414104 19
M414232 ..... 121, 123, 125, 127, 129
430836 89
502593 ..... 135, 137, 141
70406501 19
Fuse Holder
M413544P 123, 129
Fuse Receptacle
91024P 89, 121, 123, 125, 127, 129

G

Gas Shut-Off Valve
M412562P 97, 99
Gas Stove Assembly
M413657P 85, 91
M414366 91
Gas Valve
M401224P 79

N/A items do not appear in index.

info@zipnasklade.ru
8(800)500-69-51

© Copyright, Alliance Laundry Systems LLC – DO NOT COPY or TRANSMIT

M401228P 75
M401229P 75
M401230P 75
M401231P 75
M402750P 81
M403151P 81
M409517P 89, 91
M410907P 95
M410908 95
M413332P 89, 93, 99
M413468P 91, 93
44154501P 93

Gas Valve Assembly
M409152P 89, 91, 93
M409153P 89, 91
M409561P 89, 91

Gas Valve Bracket
M405945 ..... 89, 91
M406814 ..... 85, 89, 91, 99

Gas Valve Coil
44042901P 93

Gas Valve Flange Assembly
M412568 97

Gas Valve Harness Assembly
M413650 ..... 77, 83, 95, 99

Gas Valve Kit
M401225P 79
M4986P3 85
M4987P3 85
44138701P 91, 93

Gas Valve Main Coil
M411134 93

Gasket
M400798 ..... 77, 83

Ground Buss Assembly
M412656 ..... 135, 137, 139, 141

Ground Lug Connector
M411283 ..... 109, 117, 143

Guide Rail
M412476 ..... 45, 47, 51, 53

Guide Rail Support
M413267 53
M413268 53

H

Handle and Cam Assembly
M410243P 39

Harness Assembly
M412997 ..... 77, 83, 97
M413690 73

Heater Cable Assembly
M413959 107
M413960 107

Heater Cable Harness Assembly
M412801 105
M412802 105

Heater Element
M405253P 103
M405254P 103
M405255P 103
M405256P 103
M410939P 103, 105, 107
M410940P 103, 105, 107
M410941P 103, 105, 107
M412955P 105, 107

High Voltage Lead
M406881 ..... 89, 91, 99

Hinge Assembly
M400514 35

Hinge Bracket
431000* 35
431044 35

Hinge Pin
M400653 35

Hood Assembly
M401159 103

Housing and Trunnion Assembly
M4642P3 43
M4643P3 43

I

Idler Arm Kit
M414320P 49

Idler Housing
M412612 55

Idler Housing Kit
917P3 ..... 51, 55
943P3P 49

Idler Kit
M4322P3 45

Idler Shaft
M401371 51
M412099 55
M412223P 45, 49
M414241 55

Igniter
55438P 81, 85

Igniter Bracket Assembly
M402745P 81, 85

Igniter Kit
M4337P3 79
M4338P3 79

Ignition Bracket
M402594 79

Ignition Control
M406789P 89, 91
M4898P3 97
70367301P 89, 91
70367401P 99

Ignition Control Harness Assembly
M413548 99

Ignition Wire Harness Assembly
M406880 ..... 89, 91

Instant Electronic Ignition Control
M410904P 95

J

Jumper Bar
M400866 ..... 103, 105, 107

Jumper Cable Assembly
M413933 143
M413934 143

info@zipnasklade.ru
8(800)500-69-51

N/A items do not appear in index.

© Copyright, Alliance Laundry Systems LLC – DO NOT COPY or TRANSMIT

Jumper Cable Wire
M412740 131

Jumper Configuration Assembly
M413507 119
M413510 119

Jumper Harness
44129201P 143

Jumper Harness Assembly
M412871 105
M413505 119
M413506 119
M413508 119
M413509 ..... 119, 131
M414078 119

Jumper Strip
M400869 ..... 103, 105, 107

Jumper Wire
M400337 77
M402823 83
M402824 83
M402825 83
M404868 87

Jumper Wire Assembly
M401281 ..... 103, 105
M403743 103
M412116 109
M412117 109
M412287 ..... 105, 107
M412645 ..... 19, 97

K

Key
M400008 ..... 41, 47
M400993 ..... 45, 55, 57, 67
M401327 ..... 45, 47, 51, 55
M405232 ..... 41, 43

Key and Instruction Kit
M400994P 57

Kickplate Kit
M414438P 39

Knob
M400773 ..... 9, 13
M400777 29
M410927 ..... 9, 13

L

Limit Thermostat
M401404 ..... 79, 85, 89, 91
M405943 103
M406412 113
M409433 ..... 75, 81, 85, 89, 105, 107
M410220 ..... 85, 91, 99, 105, 107
M410542 ..... 39, 113
M411813 39

Lint Compartment Label
430527 115

Lint Hood Assembly
M400515 39

Lint Panel Assembly
M400464LP 39
M402722LP 39
M405646 39
M414796*P 39
M414798*P 39
M414799P 39

Lint Screen Assembly
M400522 39

Loading Spring
M400401 ..... 51, 55

Lock and Key
M401581P 31

Low Pressure Steam Cover
M400828 111

L.P. Conversion Kit
M4379P3 ..... 85, 89
M4454P3 ..... 85, 91
M4478P3 ..... 85, 91
M4609P3 ..... 85, 91

L.P. Gas Valve Kit
M4897P3 ..... 91, 93

L.P. Valve Conversion Kit
M405434P 87, 93

M

Magnetic Operator
M406217P 77, 83

Main Coil
M405430 87

Main Harness
44098801 19

Main Harness Assembly
M413546 29
M413676P 19

Manifold Pipe Assembly
M406681 ..... 75, 79, 81, 85, 89, 91
M413395 99

Manual Reset Thermostat
M411941 113
M411943 95

Micro Harness Assembly
M413677 19

Micro Mounting Assembly
M413738 19

Micro V Belt
M411425P 47

Micro V Pulley
M411466P 49

Micro V Sheave
M412156 47

Microprocessor Overlay
M412961 17
M413417 19
M413423 19
M413425 19
M413426 19

Motor
M400611P 15
M409735P 59, 61, 63
M410852 67
M411188P 63
M411189P 59
M411190P 59
M411191P 59, 63
M412225P 61

N/A items do not appear in index.

info@zipnasklade.ru
8(800)500-69-21

© Copyright, Alliance Laundry Systems LLC – DO NOT COPY or TRANSMIT

M412226P 63
M412227P 63
44046101P 61
44046201P 61, 63
44046301P 65

Motor Base
M413391 65

Motor Belt
M411814P 51

Motor Bracket
M411483 ..... 47, 53, 57

Motor Bracket Assembly
M400520 67
M400521 67

Motor Capacitor
M406291 63
M410296 63
M410298 63
M410300 63
M410301 63
M410302 63

Motor Hardware Kit
M4426P3 57

Motor Harness Assembly
M411828 ..... 59, 61, 67, 69
M411980 ..... 59, 61
M412107 ..... 67, 69

Motor Kit
M412519P 67, 69
M412520P 67, 69

Motor Mount Assembly
M413617 ..... 67, 69

Motor Mounting Ring Kit
M405419P 57

Motor Replacement Kit
M4833P3 ..... 61, 63
M4834P3 ..... 59, 61
M4857P3 59
M4858P3 59

Motor Wire Harness Assembly
M409489 ..... 59, 61, 63
M409982 ..... 59, 61
M411827 ..... 59, 61, 67, 69

Mounting Plate
M410800 17
M413397 17
70208801 23

Mounting Switch Base
M412186 141
M412187P 135, 137, 139

N

Nameplate
M410355 33

Nameplate Overlay
M412963 33
70240801 ..... 9, 33

Network Board Assembly
210016P 21

Network Capacitor Assembly
M413863 ..... 121, 123, 125, 127, 129

Network Capacitor Harness Assembly
M413878 ..... 119, 121

Network Plug Support
70201401 21

Network Wire Harness Assembly
800217 21

Nut
M400022 57
M400026 ..... 45, 47, 51, 53
M400033 ..... 43, 47
M400034 57
M400035 ..... 43, 47
M400672 7
M400926 79
M400977 73
M400979 73
M400981 29
M401548 ..... 75, 79, 81, 85, 89, 91, 99
M401930 41
M404993 ..... 41, 47, 53
M412626 ..... 47, 53
M412688 ..... 135, 137, 139, 141
M414215 35
Q6163 ..... 35, 103, 105
02428 ..... 45, 57, 65, 67, 69
02788 29
20274 ..... 43, 65
20275 35
52566 49
56156 49
70054 ..... 19, 25, 105, 107
70142 ..... 53, 57

O

Operator
M400331P 77

Overlay
70184301 25
70184302 25
70184401 23
70239601 25
70239602 25

P

Panel Key
M401677 33
M401680 ..... 33, 39

Panel Lock
M406654P 39

PC Board Standoff
210098 27

Pilot Electrode
M402591P 79

Pilot Ignition Control
M410011P 79

Pilot Light
JST-163-2 9

Pilot Tubing
M402596 79

Pipe
M400749 ..... 75, 79, 81, 85, 89, 91, 97, 99

Pop Rivet
M400003 35
M405750 ..... 7, 9, 13

N/A items do not appear in index.

info@zipnasklade.ru
8(800)500-69-51

© Copyright, Alliance Laundry Systems LLC – DO NOT COPY or TRANSMIT

Pulley
M412884 53
M414564 57
M414565 ..... 67, 69
M414566 57
M414567 69

Pushbutton
44018801 13

Pushbutton Switch
M413431 99
70413301 ..... 23, 25

Push-to-Start Switch Kit
44106901P 7, 9

R

Relay
M400911P 9
M400912P 9, 17
M412534 ..... 135, 137, 139, 141
430746 ..... 121, 123, 125, 127
431349 ..... 121, 145

Relay Harness Assembly
M412636 131
M412776P 131
M412777 131
M414032 119
M414150 119
M414224 119

Remote Igniter Kit
M4385P3 79

Replacement Door Handle Kit
70133501P 35

Reset Assembly
M400329P 77

Resilient Ring Kit
M4525P3P 57

Resistor Assembly
M400527 ..... 7, 9
M410992 9

Return Spring
M405138B 15

Reversing Contactor
M400906P 117
M410515P 117
M413615P 127, 129

Reversing Contactor Harness Assembly
M414034 119

Reversing Contactor Jumper Assembly
M413624 119
M413695 119

Reversing Contactor Kit
M4849P3 ..... 117, 133

Reversing Jumper Harness Assembly
M412927 119
M412928 ..... 119, 131
M412929 ..... 119, 131

Reversing Timer
M411683 ..... 117, 133

Rib Rod
M400901 41
M401411 41
M404992 41

Ring
M400399 ..... 45, 47

Rocker Switch
M413270 ..... 9, 17

Roller Chain
M400597P 51
M401425 45

Run Light
M404151 7

S

Screw
M400043 ..... 47, 53
M400044 ..... 17, 35, 109, 121, 123, 125, 127, 129
M400057 ..... 53, 57, 65, 67, 69
M400061 45
M400063 43
M400065 ..... 45, 47, 51, 67
M400071 ..... 7, 9, 29, 121, 123, 125, 127
M400072 ..... 7, 9, 29
M400077 ..... 49, 57
M400661 35
M400664 ..... 17, 39, 73, 75, 79, 81, 85, 89, 91, 95, 103, 109, 113
M401938 73
M402797 ..... 75, 79, 81, 85, 89, 91
M402917 ..... 7, 9, 109, 117, 121, 123, 125, 127, 129, 143
M405188 ..... 57, 67, 85, 89, 91
M405525 ..... 45, 47, 51
M405824 ..... 121, 123, 125, 127, 129, 145
M409385 ..... 35, 43, 51, 55, 79
M410059 57
M411052 ..... 9, 13
M412531 37
M412627 ..... 47, 53
M413565 69
Q6516 29
22688 65
27202 ..... 69, 71
33562 ..... 7, 9, 105, 107, 135, 137, 139, 141
39733 143
430497 ..... 19, 33, 73, 107, 109, 111, 113, 117
430648 ..... 49, 53
430757 39
431287 33
501086 ..... 135, 137, 139, 141
501524 25
51778 ..... 121, 123, 125, 127, 129
51780 ..... 9, 109, 123, 125, 127, 129, 135, 137, 139, 141, 143, 145
56693 ..... 81, 85
62541 ..... 45, 51
70240301 107

Sensor
510213 ..... 81, 85

Sensor Cable Harness
M413559P 19
M413560P 19

Sensor Probe
M401209P 79

Shadow Box and Clip
M400131P 31

Shadow Box Clip
M400972 31

N/A items do not appear in index.

info@zipnaskade.ru
8(800)500 60 51

© Copyright, Alliance Laundry Systems LLC – DO NOT COPY or TRANSMIT

Sheave Kit
44086901P 45, 47
Shut-Off Valve Kit
M4983P3 ..... 75, 79, 81, 85, 89, 91, 99
Single Sheave
M400147 51
Single V Sheave
M412931 53
Sleeve
M400925 79
Solenoid Valve DIN Connector
70370301P 111
Spacer
M401402 41
44024001 ..... 43, 53
Spark Igniter
M406934P 89, 91, 97, 99
M410905P 95
Spring Clip
M400402 35
Sprocket
M400090P 43
M401364P 51
M401365P 45
Spud Holder Assembly
M406810 ..... 85, 91, 99
M410546 ..... 89, 99
Steam Coil
M400636P 111
M400637P 111
Steam Heater Assembly
M413572P 111
Steam Solenoid
70351011P 111
70351012 111
Steam Valve
F8322902 111
F8322903 111
M413295P 111
M413298P 111
Steam Valve Coil
M401383 111
M412258 111
M413299P 111
M413301 111
M413302 111
70205701P 111
Steam Valve Kit
F951P3 111
Steam Valve Rebuild Kit
M412259 111
Stove Assembly
M414795 89
Stove Limit Harness Assembly
M412609 89
M413691 91
Stove Limit Wire Harness Assembly
M413499 91
Street Elbow
H86070034 97
Support Bearing
70448701 49
Switch
M400947 15
Switch Base
M412528 37
Switch Plate
M413236 17

T

Tailpiece
44092201 ..... 75, 79, 81, 85, 89
44092202 ..... 75, 79, 81, 85, 89
Temperature Control Thermostat
M400780P 29
M406959P 29
Tension Plate Assembly
M414405 ..... 47, 53
Terminal Block
M400685 109
M405363 145
M405364 ..... 121, 123, 125, 127, 129, 145
M412042 109
M412045P 109, 141
M412537 ..... 135, 137, 141
M412538 139
M412631 ..... 135, 137, 139, 141
M412632 ..... 135, 137, 139, 141
M413864 143
M413865 143
430642 ..... 121, 123, 125, 127, 129
Terminal Block End
M400681 109
Terminal Strip
M413542 ..... 121, 123, 125, 127, 129
Thermistor
M414704 39
Thermistor Assembly
M413212P 39
510523 39
Thermocouple
M400934 75
Thermodisc Bracket
M400838 ..... 81, 85, 89
Thermostat Bracket
M401312 39
M402798 ..... 75, 79
M406882 ..... 85, 91
Thermostat Cover
M414477 ..... 85, 91, 95
Thermostat Harness
M412920 ..... 85, 91, 99
Thermostat Kit
M4347P3 103
Thimble Vane Assembly
M400503 113
M413382 113
Timer
M412079P 13
Timer Kit
M410900P 9
M410901P 9
M410902P 9
M410903P 9
Timer Motor
M400609 15
M410789 15

N/A items do not appear in index.

info@ziphasklade.ru
8(800)500-69-51

© Copyright, Alliance Laundry Systems LLC – DO NOT COPY or TRANSMIT

Timing Cam
M400732P 15
M400733P 15
M400734P 15
M400735P 15
M400736P 15
M400737P 15
M400738P 15
M400739P 15
M400740P 15
M400741P 15

Toggle Switch
M400945 ..... 9, 17

Top Cover Panel
M403385 33

Top Front Access Panel
M410801*P 33
M410802 33

Top Front Panel
M414350 33

Top Front Panel Assembly
M414349*P 33

Transformer
M401391P 29, 109, 117
M402650P 29
M412412P 139
M412477P 135, 137, 141
M413100P 99, 123
M414228P 121, 123, 125, 127, 129
M414229P 123, 129

Transformer Harness Assembly
M412641 131
M412642 131
M414028 119
M414029 119
M414076 119

Transformer Kit
M401199P 29

Trunnion and Bearing Assembly
M4638P3 41
M4639P3 41
M4640P3 41
M4641P3 41

Trunnion Assembly
M413833P 41
M413836 41

Trunnion Housing
M413826 43

Trunnion Housing Assembly
M413832 43

Trunnion Kit
M413834P 41
44261801 41

Tumbler Dolly Kit
M4379P4 35

V

Valve Rebuild Kit
F8379502 111

Valve Repair Kit
M400152 111
M401384 111

Valve Replacement Kit
M4909P3 ..... 89, 93

Vane
M400253 73

Vane Assembly
M400541 73

Vault Key
M401701 31

W

Warning Label
M410892 115
500316 115

Washer
M400013 ..... 41, 45, 53, 57, 65, 67, 71
M400014 ..... 45, 47, 51, 53, 57
M400017 35
M400080 ..... 45, 53, 57, 65, 67, 69, 71
M400081 ..... 45, 47, 51
M400606 ..... 75, 79, 81, 85
M400675 ..... 7, 35
M400991 57
M401947 41
M403958 ..... 47, 53
M405535 49
M412188 ..... 47, 53
M412530 35
02834 69
03189 35
03815 ..... 35, 79, 81
20103 43
91200 ..... 41, 43

Wire Harness Assembly
M401909 73
M403824 ..... 73, 75, 81, 85, 89
M405372 9
M410599 89

Wire Lead
M402597 79

info@zipnasklade.ru
8(800)500-69-51

N/A items do not appear in index.

© Copyright, Alliance Laundry Systems LLC – DO NOT COPY or TRANSMIT

Notes

info@zipnasklade.ru
8(800)500-69-51

© Copyright, Alliance Laundry Systems LLC – DO NOT COPY or TRANSMIT