Roll Heated Flatwork Finisher

13 Inch (325 mm) Roll Heated Models

Refer to Page 3 for Model Numbers

Parts

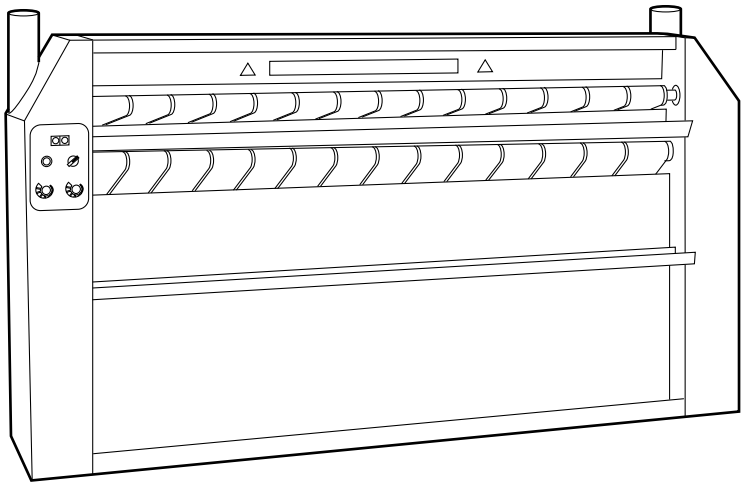

FWF1N_1300576

info@zipnasklade.ru
8(800)500-69-51

Alliance Laundry Systems

www.alliancelaundry.com

Part No. 1300576R13
July 2013

info@zipnasklade.ru
8(800)500-69-51

Table of Contents

Title	Page

Parts Ordering Information 2
Serial Plate Location 2
Model Identification 3
Microprocessor Control - Electric Heat Models 4
Microprocessor Control - Gas Heat Models 6
Electromechanical Control - Electric Heat Models 8
Electromechanical Control - Gas Heat Models 10
Press Rolls 12
Rolls, Guide and Scrapers 14
Panels, Electrical Box and Receiving Tray (Drawing 1 of 2) 16
Panels, Electrical Box and Receiving Tray (Drawing 2 of 2) 18
Tension Bearing and Side Roller 20
Sprockets and Chain Tensioner 22
Heating Elements and Fan Motor - Electric Heat Models 24
Electric Heat Roll - Electric Heat Models 26
Burner and Exhaust - Gas Heat Models 28
Labels 30
Parts Index 33

info@zipnasklade.ru
8(800)500-69-51

© Copyright 2013, Alliance Laundry Systems LLC

All rights reserved. No part of the contents of this book may be reproduced or transmitted in any form or by any means without the expressed written consent of the publisher.

Parts Ordering Information

If literature or replacement parts are required, contact the source from whom the machine was purchased or contact Alliance Laundry Systems at (920) 748-3950 for the name and address of the nearest authorized parts distributor.

For technical assistance, call either of the numbers listed below:

(920) 748-3121 Ripon, Wisconsin

+32 56 41 20 54 Wevelgem, Belgium

Serial Plate Location

When calling or writing about your product, be sure to mention model and serial numbers. Model and serial numbers are located on serial plate(s) as shown.

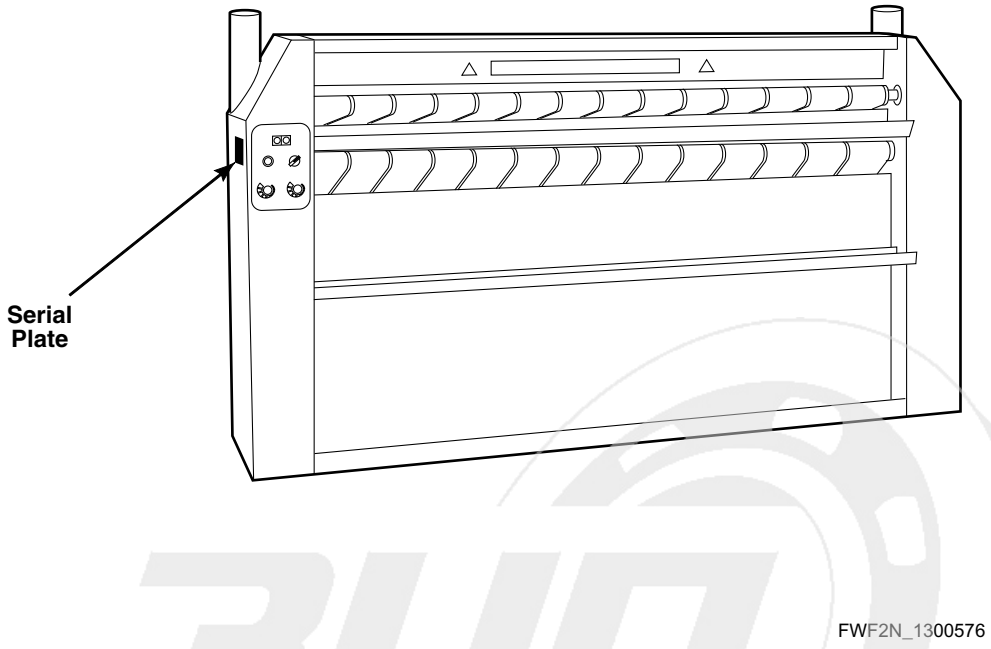

info@zipnasklade.ru
8(800)500-69-51

© Copyright, Alliance Laundry Systems LLC – DO NOT COPY or TRANSMIT

Model Identification

Information in this manual is applicable to these roll heated flatwork finisher models:

UD13F063
UD13F078
UD13F079
UD13F126

info@zipnasklade.ru
8(800)500-69-51

© Copyright, Alliance Laundry Systems LLC – DO NOT COPY or TRANSMIT

Microprocessor Control - Electric Heat Models

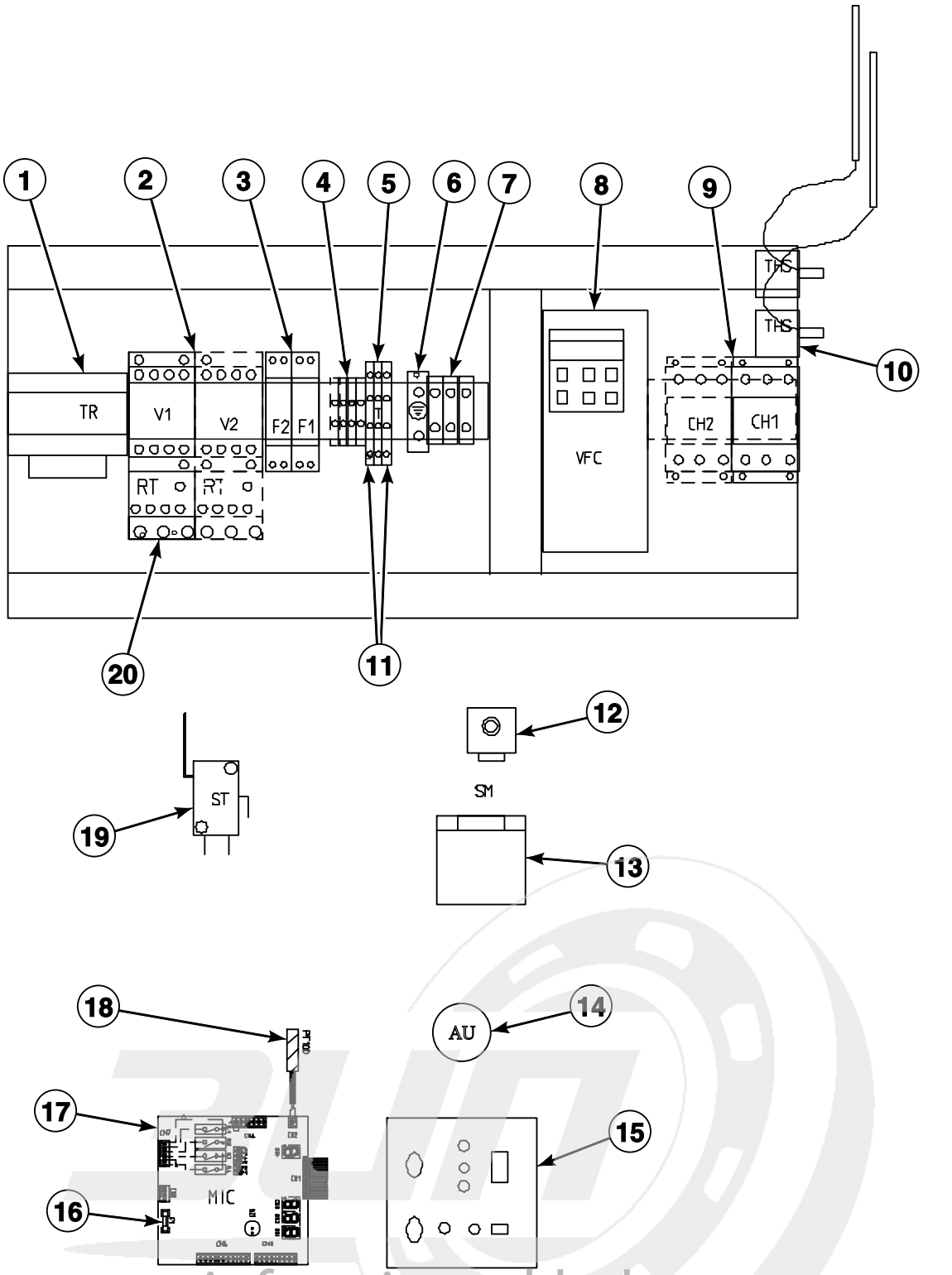

FWF133P_1300576

info@zipnasklade.ru
8(800)500-69-51

© Copyright, Alliance Laundry Systems LLC – DO NOT COPY or TRANSMIT

Microprocessor Control - Electric Heat Models

REF	PART NO.	DESCRIPTION	COMMENTS
1	1300534P	Transformer	
2	1300014	Contactor	
3	1300529	Fuse Holder	
	1300531	Fuse	
4	1300021	Terminal Block	
5	1300555	Ground Terminal Block	
6	N/A	Ground Terminal Block	
7	N/A	Terminal Block	
8	1300038	Inverter Drive	
9	1300012	Heat Contactor	
10	1300079P	Thermostat	
11	1300557	Terminal Block	
12	1300044	Position Switch Head	
13	1300043	Position Switch Body	
14	44018701P	Emergency Stop Kit	Includes 44018701 Contact Block, 1300559 Emergency Switch and 44018801 Pushbutton
	44018701	Contact Block	
	1300559	Emergency Switch	
	44018801	Pushbutton	
15	1300526P	Control Panel	
16	1300547	Fuse	630 mA
17	1300527P	Printed Circuit Board	
18	1300565P	Temperature Sensor	Models starting 1/1/06
	N/A	Temperature Probe	Models through 12/31/05
19	1300521	Safety Microswitch	
20	1300010	Thermal Relay	

N/A = Part no longer available

info@zipnasklade.ru
8(800)500-69-51

© Copyright, Alliance Laundry Systems LLC – DO NOT COPY or TRANSMIT

Microprocessor Control - Gas Heat Models

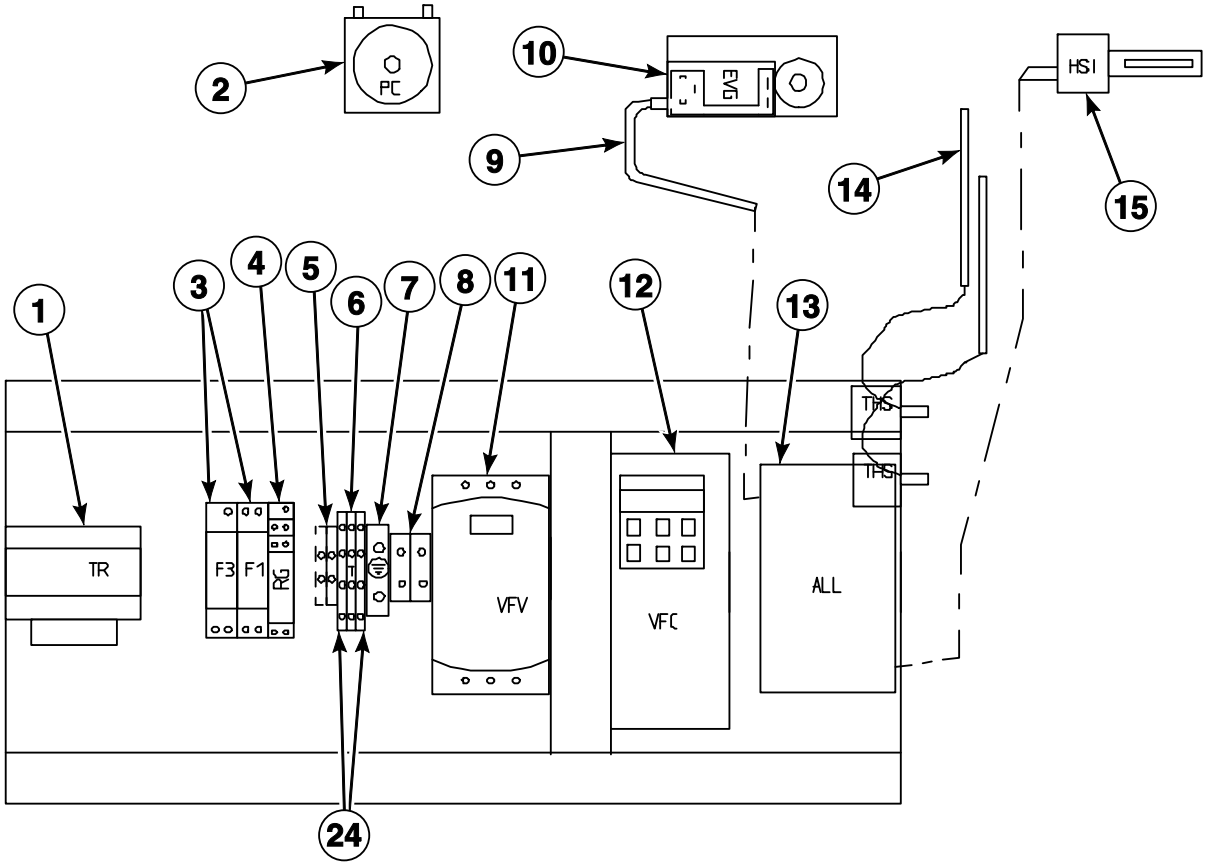

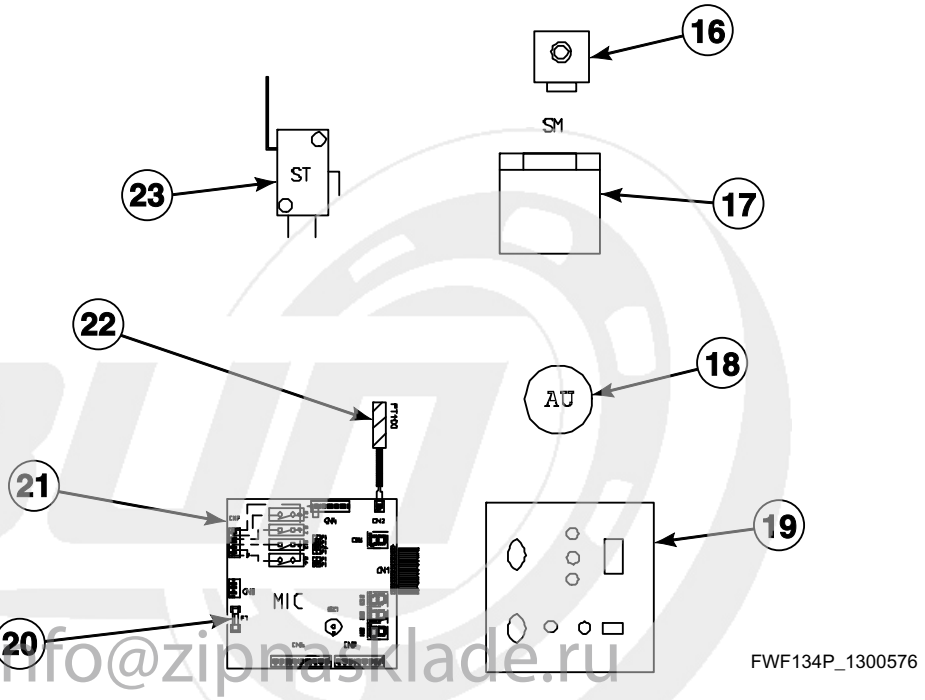

FWF134P_1300576

info@zipnasklade.ru
8(800)500-69-51

© Copyright, Alliance Laundry Systems LLC – DO NOT COPY or TRANSMIT

Microprocessor Control - Gas Heat Models

REF	PART NO.	DESCRIPTION	COMMENTS
1	1300522	Transformer	
2	1300033P	Pressure Switch	
3	1300529	Fuse Holder	
	1300530	Fuse	F1; Gas heat models
	1300533	Fuse	F3; Gas heat models
4	1300525P	Gas Heat Contactor	
5	1300021	Terminal Block	
6	1300555	Ground Terminal Block	
7	N/A	Ground Terminal Block	
8	N/A	Terminal Block	
9	1300007	Gas Valve Harness	
10	1300518	Gas Valve	24 Volt
11	1300054-1	Fan Inverter	110 Volt
	1300596	Inverter Drive	220 Volt
12	1300054-1	Fan Inverter	
13	1300008	Ignition Control	
14	1300079P	Thermostat	
15	1300006P	Igniter	
16	1300044	Position Switch Head	For handle switch
17	1300043	Position Switch Body	For handle switch
18	44018701P	Emergency Stop Kit	Includes 44018701 Contact Block, 1300559 Emergency Switch and 44018801 Pushbutton
	44018701	Contact Block	
	1300559	Emergency Switch	
	44018801	Pushbutton	
19	1300526P	Control Panel	
20	1300547	Fuse	630 mA
21	1300527P	Printed Circuit Board	
22	1300565P	Temperature Sensor	Models starting 1/1/06
	N/A	Temperature Probe	Models through 12/31/05
23	1300521	Safety Microswitch	
24	1300557	Terminal Block	

N/A = Part no longer available

info@zipnasklade.ru
8(800)500-69-51

© Copyright, Alliance Laundry Systems LLC – DO NOT COPY or TRANSMIT

Electromechanical Control - Electric Heat Models

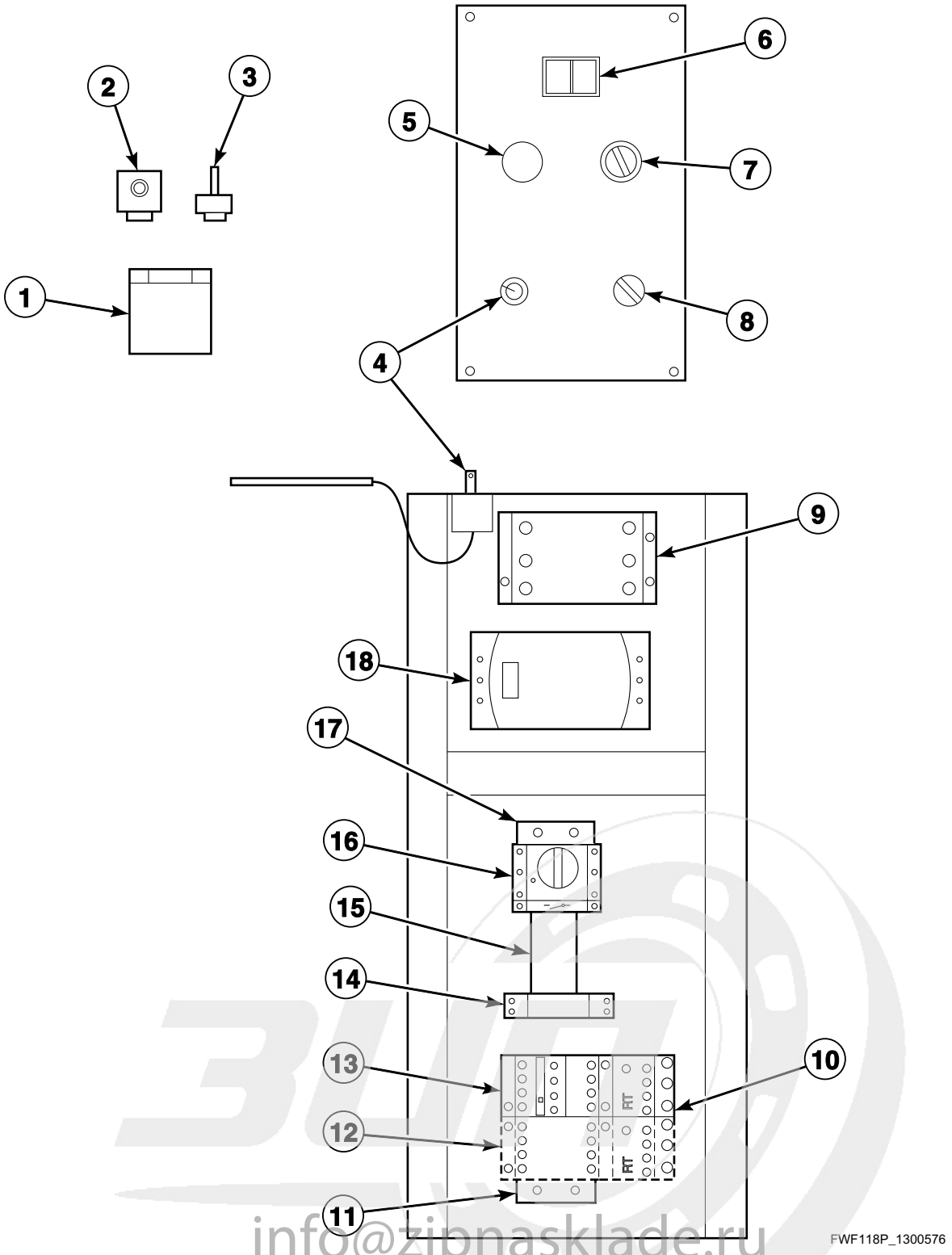

info@zipnasklade.ru
8(800)500-69-51

© Copyright, Alliance Laundry Systems LLC – DO NOT COPY or TRANSMIT

Electromechanical Control - Electric Heat Models

REF	PART NO.	DESCRIPTION	COMMENTS
	1300883	Transformer	
1	1300043	Position Switch Body	
2	1300044	Position Switch Head	
3	1300047	Finger Guard Head Switch	
4	1300079P	Thermostat	
5	1300025	Heat Pilot Light	
6	44018701	Contact Block	
	1300039	Pushbutton Head	
7	1300041	Switch Body	
	1300040	Switch Head	
8	1300026	Speed Potentiometer	
9	1300013	Heat Contactor	
10	1300015	Thermal Relay	
11	N/A	Ground Terminal Block	
12	1300014	Contactor	
13	1300017	Auxiliary Contactor	
14	N/A	Fuse Holder	
	1300563	Fuse	
15	1300021	Terminal Block	
16	1300049P	Main Switch Assembly	Complete (includes handle)
	1300051	Main Switch Body	
	1300048P	Main Switch	Switch only
17	1300050P	Neutral Terminal	
18	1300038	Inverter Drive	

N/A = Part no longer available

info@zipnasklade.ru
8(800)500-69-51

© Copyright, Alliance Laundry Systems LLC – DO NOT COPY or TRANSMIT

Electromechanical Control - Gas Heat Models

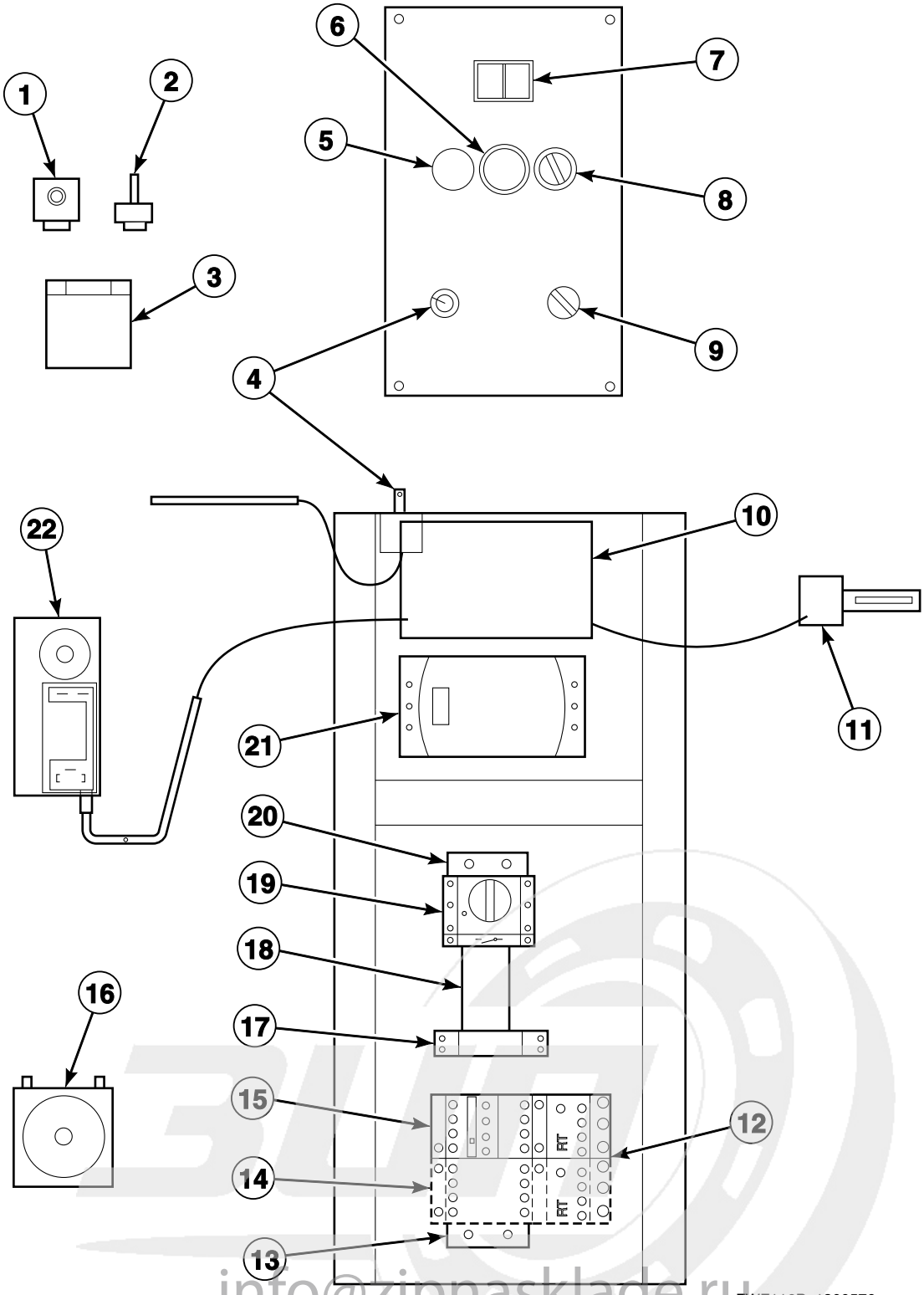

info@zipnasklade.ru
8(800)500-69-51

© Copyright, Alliance Laundry Systems LLC – DO NOT COPY or TRANSMIT

Electromechanical Control - Gas Heat Models

REF	PART NO.	DESCRIPTION	COMMENTS
	1300883	Transformer	
	1300885	Harness	CN7
1	1300044	Position Switch Head	
2	1300047	Finger Guard Head Switch	
3	1300043	Position Switch Body	
4	1300079P	Thermostat	
5	1300025	Heat Pilot Light	
6	1300519	Gas Reset Pushbutton Head	
	1300045	Pushbutton Body	
7	44018701	Contact Block	
	1300039	Pushbutton Head	
8	1300041	Switch Body	
	1300040	Switch Head	
9	1300026	Speed Potentiometer	
10	1300520P	Ignition Control	
11	1300006P	Igniter	
12	1300015	Thermal Relay	
13	N/A	Ground Terminal Block	
14	1300014	Contactor	
15	1300017	Auxiliary Contactor	
16	1300514	Pilot Light Bulb	
17	N/A	Fuse Holder	
	1300563	Fuse	
18	1300021	Terminal Block	
19	1300049P	Main Switch Assembly	Complete (includes handle)
	1300051	Main Switch Body	
	1300048P	Main Switch	Switch only
20	1300050P	Neutral Terminal	
21	1300038	Inverter Drive	
22	1300518	Gas Valve	24 Volt
	1300627	Gas Valve	230 Volt

N/A = Part no longer available

info@zipnasklade.ru
8(800)500-69-51

© Copyright, Alliance Laundry Systems LLC – DO NOT COPY or TRANSMIT

Press Rolls

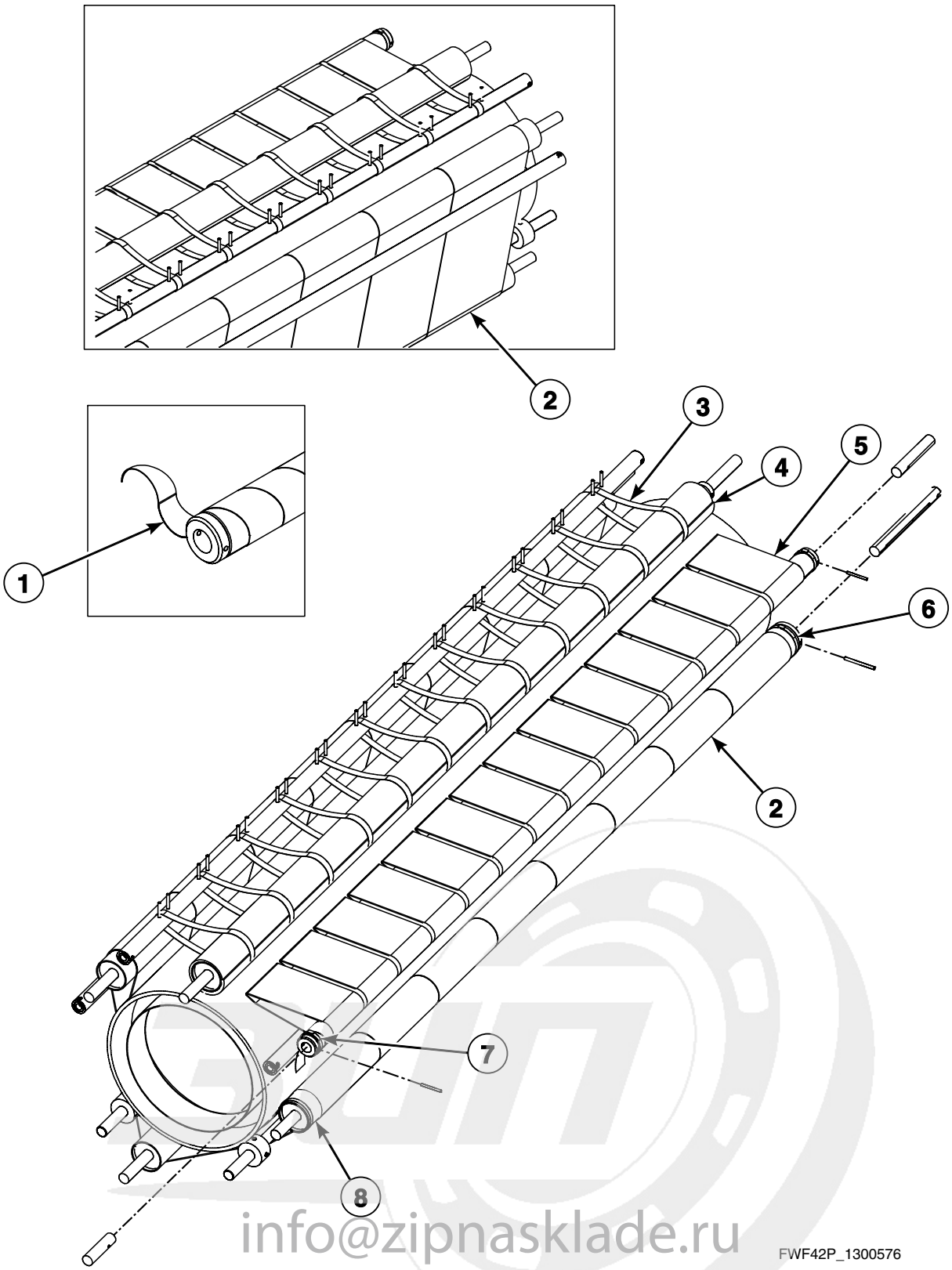

info@zipnasklade.ru
8(800)500-69-51

© Copyright, Alliance Laundry Systems LLC – DO NOT COPY or TRANSMIT

Press Rolls

REF	PART NO.	DESCRIPTION	COMMENTS
	1301133	Return Ribbon Pin	Model UD13F063 8 required; Models UD13F078 and UD13F079 10 required; Model UD13F126 16 required
1	1300162	Roll Tape	Sold per meter; Model UD13F063 4.6 meters; Models UD13F078 and UD13F079 5.5 meters; Model UD13F126 9 meters
2	1300161	Return Ribbon	Includes pin; Model UD13F063 8 required; Models UD13F078 and UD13F079 10 required; 8x65
	1300580P	Ribbon	Model UD13F126; 16 required
3	1300165	Guide Tape	Sold per meter; Model UD13F063 8 meters; Models UD13F078 and UD13F079 10 meters; Model UD13F126 14 meters
4	1300199	Press Roll Pad	Model UD13F063; Use 511637P Adhesive to hold in place
	1300200P	Press Roll Pad	Models UD13F078 and UD13F079; Use 511637P Adhesive to hold in place
	1300197P	Compression Roll Pad	Model UD13F126; Use 511637P Adhesive to hold in place
5	1300160	Feed Ribbon	Model UD13F063 14 required; Models UD13F078 and UD13F079 17 required; 4x16
	1300153P	Feed Ribbon	Model UD13F126; 27 required
6	1300164	Clamp	2 required
7	1300163	Clamp	2 required
8	1300162	Roll Tape	Sold per meter; Model UD13F063 6.6 meters; Models UD13F078 and UD13F079 8 meters; Model UD13F126 20 meters

info@zipnasklade.ru
8(800)500-69-51

© Copyright, Alliance Laundry Systems LLC – DO NOT COPY or TRANSMIT

Rolls, Guide and Scrapers

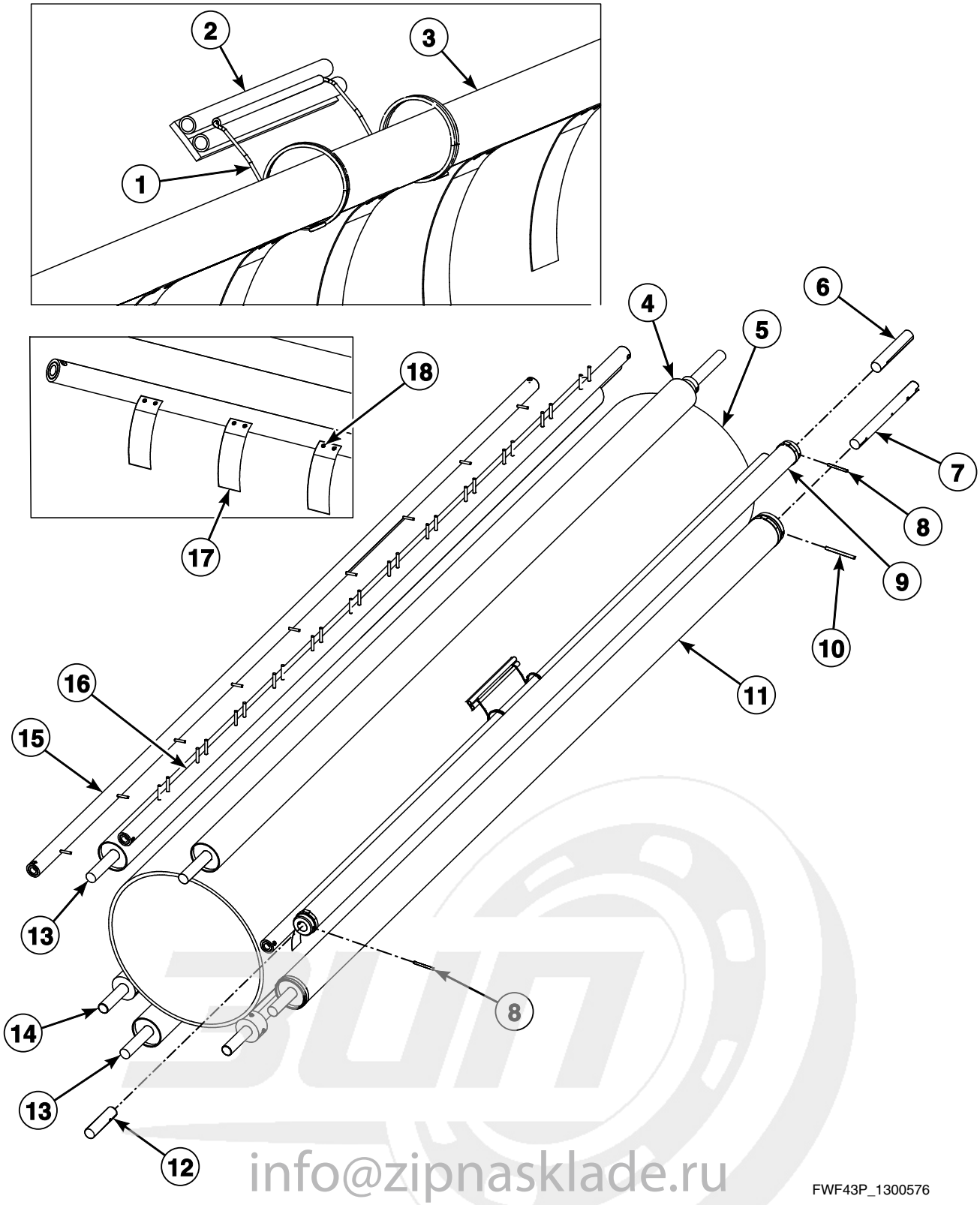

info@zipnasklade.ru
8(800)500-69-51

© Copyright, Alliance Laundry Systems LLC – DO NOT COPY or TRANSMIT

Rolls, Guide and Scrapers

REF	PART NO.	DESCRIPTION	COMMENTS
1	1300202	Sensor Spring	Use with item 2; 2 required
2	1301116	Sensor	2 required
3	1300380	Textile Scraper Rail	Model UD13F063
	1300399	Textile Scraper Rail	Models UD13F078 and UD13F079
	1300502	Textile Scraper Rail	Model UD13F126
4	1300383	Pressure Roll	Model UD13F063
	1300400	Pressure Roll	Models UD13F078 and UD13F079
	1300497	Pressure Roll	Model UD13F126
5	1300377	Heated Roll	Model UD13F063
	1300394	Heated Roll	Models UD13F078 and UD13F079
	1300599	Ironing Roll	Model UD13F126
6	1300086R	Pick Up Roll Shaft	Right; All models except UD13F126
7	1300102	Drive Roll Shaft	All models except UD13F126
8	1300176	Pick-Up Roll Roll Pin	4x40; 2 required; All models except UD13F126
9	1300381	Pick-Up Roll	Model UD13F063
	1300398P	Pick-Up Roll	Models UD13F078 and UD13F079
	1300496	Auxiliary Feed Roll	Model UD13F126
10	1300159	Drive Roll Roll Pin	5x60; All models except UD13F126
11	1300385	Return Ribbon Roll	Model UD13F063
	1300401	Return Ribbon Roll	Models UD13F078 and UD13F079
	1300494	Rail	Model UD13F126
12	1300086L	Pick Up Roll Shaft	Left; All models except UD13F126
13	1300889	Return Ribbon Roll	Model UD13F063; 2 required
	1300884	Return Ribbon Roll	Models UD13F078 and UD13F079; 2 required
	1300506	Roller	Model UD13F126; 2 required
14	1300382	Shaft	Model UD13F063; 2 required
	1300402	Shaft	Models UD13F078 and UD13F079; 2 required
	1300138	Heated Roll Shaft	Model UD13F126; 2 required
15	1300374	Feed Ribbon Guide	Model UD13F063
	1300395	Feed Ribbon Guide	Models UD13F078 and UD13F079
	1300598	Ribbon Guide	Model UD13F126
16	1300378	Ribbon Guide	Model UD13F063
	1300395	Feed Ribbon Guide	Models UD13F078 and UD13F079
	1300505	Guide Rail	Model UD13F126
17	1300220P	Textile Scraper Kit	Includes 2 1300511 Pop Rivets; Model UD13F063: 13 required through 12/31/03, 7 required starting 1/1/04; Models UD13F078 and UD13F079: 15 required through 12/31/03, 9 required starting 1/1/04; Model UD13F126: 14 required starting 1/1/04
18	1300511	Pop Rivet	

info@zipnasklade.ru
8(800)500-69-51

© Copyright, Alliance Laundry Systems LLC – DO NOT COPY or TRANSMIT

Panels, Electrical Box and Receiving Tray (Drawing 1 of 2)

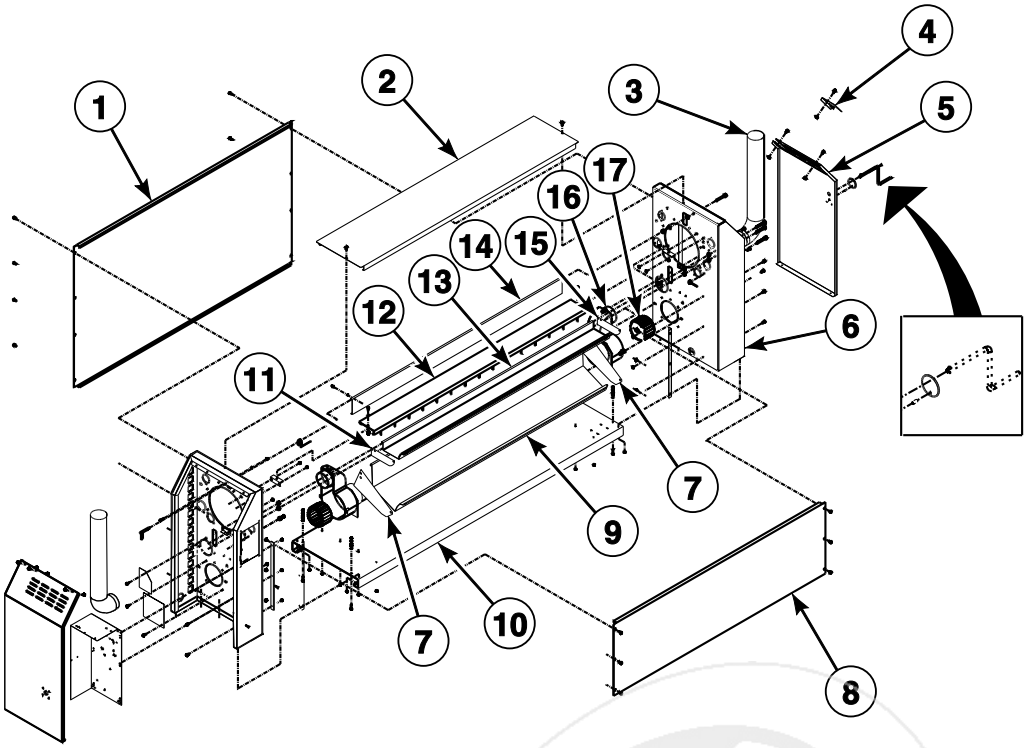

FWF197P_1300576

info@zipnasklade.ru
8(800)500-69-51

© Copyright, Alliance Laundry Systems LLC – DO NOT COPY or TRANSMIT

Panels, Electrical Box and Receiving Tray (Drawing 1 of 2)

REF	PART NO.	DESCRIPTION	COMMENTS
1	1300369	Rear Panel	Models UD13F078 and UD13F079
	1300387	Rear Panel	Model UD13F063
	1300491	Rear Panel	Model UD13F126
2	1300388P	Top Panel	Models UD13F078 and UD13F079; Models through 3/31/12
	1301071	Top Panel	Models UD13F078 and UD13F079; Models starting 4/1/12
	1300370	Top Panel	Model UD13F063; Models through 3/31/12
	1301072	Top Panel	Model UD13F063; Models starting 4/1/12
	1300586	Upper Panel	Model UD13F126; Models through 3/31/12
	1301070	Top Panel	Model UD13F126; Models starting 4/1/12
3	1300155	Exhaust Pipe Elbow	Models UD13F078, UD13F079 and UD13F126 2 required; Model UD13F063 1 required
4	1300000	Nameplate Overlay	
	1300001	Nameplate Overlay	
	1300002	Nameplate Overlay	
5	1300215	Right Panel	Models through 3/31/12
	1301095	Right Panel	Models starting 4/1/12
6	1300213	Right Frame	Models through 3/31/12
	1301091	Right Frame	Beige; Models starting 4/1/12
	1301092	Right Frame	Gray; Models starting 4/1/12
7	1300239	Receiving Tray End Panel	Model UD13F126; Models through 3/31/12
	1301074	Receiving Tray End Panel	Model UD13F126; Models starting 4/1/12
8	1300391	Front Panel	Models UD13F078 and UD13F079; Models through 3/31/12
	1301066	Front Panel	Models UD13F078 and UD13F079; Models starting 4/1/12
	N/A	Front Panel	Model UD13F063; Models through 3/31/12
	1301067	Front Panel	Model UD13F063; Models starting 4/1/12
	N/A	Front Panel	Model UD13F126; Models through 3/31/12
	1301065	Front Panel	Model UD13F126; Models starting 4/1/12
	1301069	Panel Raiser	Model UD13F126; Models starting 4/1/12
9	N/A	Receiving Tray	Models UD13F078 and UD13F079; Models through 3/31/12
	1301075	Receiving Tray	Models UD13F078 and UD13F079; Models starting 4/1/12
	N/A	Receiving Tray	Model UD13F063; Models through 3/31/12
	1301076	Receiving Tray	Model UD13F063; Models starting 4/1/12
	1301123	Delivery Tray Assembly	Model UD13F126
10	1301079	Base	Models UD13F078 and UD13F079
	1301080	Base	Model UD13F063
	1301078	Base	Model UD13F126
11	1300859-L	Bracket	Left; Model UD13F126; Models through 3/31/12
	1301086	Bracket	Model UD13F126; Models starting 4/1/12
12	1300390	Feed Board	Models UD13F078 and UD13F079; Models through 3/31/12
	1301083	Feed Board	Models UD13F078 and UD13F079; Models starting 4/1/12
	N/A	Feed Board	Model UD13F063; Models through 3/31/12
	1301084	Feed Board	Model UD13F063; Models starting 4/1/12
	N/A	Feed Table	Model UD13F126; Models through 3/31/12
	1301082	Feed Board	Model UD13F126; Models starting 4/1/12
13	1300398P	Pick-Up Roll	Models UD13F078 and UD13F079; Models through 3/31/12
	1301087	Feed Tray	Models UD13F078 and UD13F079; Models starting 4/1/12
	1300375	Feed Tray	Model UD13F063; Models through 3/31/12
	1301088	Feed Tray	Model UD13F063; Models starting 4/1/12
	1301123	Delivery Tray Assembly	Model UD13F126
14	1300389	Finger Guard	Models UD13F078 and UD13F079
	1300371	Finger Guard	Model UD13F063
	1300592	Finger Guard	Model UD13F126; Models through 3/31/12
	1301090	Finger Guard	Model UD13F126; Models starting 4/1/12
15	1300859-R	Bracket	Right; Model UD13F126; Models through 3/31/12
	1301086	Bracket	Model UD13F126; Models starting 4/1/12
16	1300327	Right Blower Housing	Models through 3/31/12
	1301064	Blower Housing	2 required; Models starting 4/1/12
17	1300105	Blower Wheel	Right

N/A = Part no longer available

info@zipnasklade.ru
8(800)500-69-81

© Copyright, Alliance Laundry Systems LLC – DO NOT COPY or TRANSMIT

Panels, Electrical Box and Receiving Tray (Drawing 2 of 2)

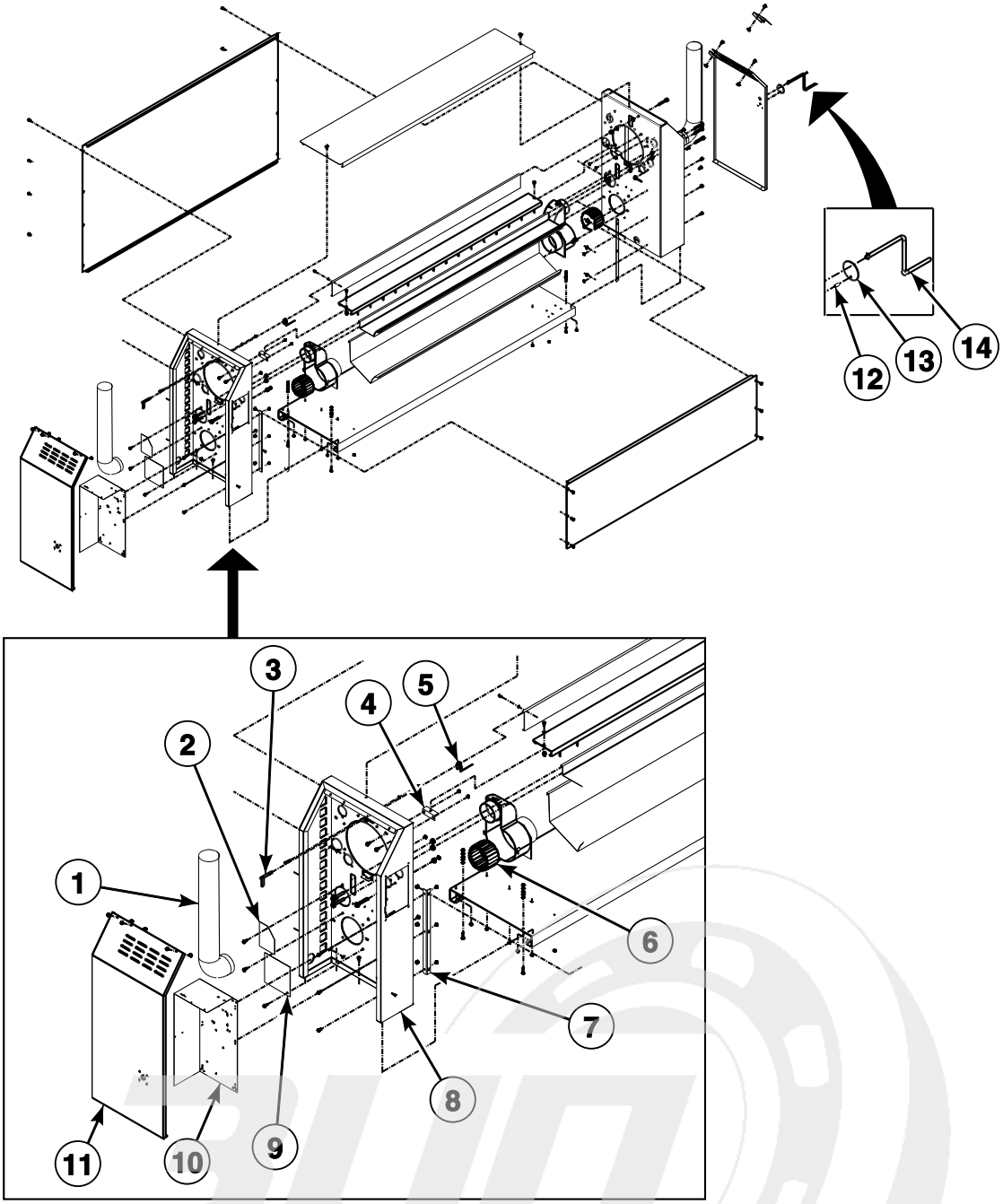

FWF41PA_1300576

info@zipnasklade.ru
8(800)500-69-51

© Copyright, Alliance Laundry Systems LLC – DO NOT COPY or TRANSMIT

Panels, Electrical Box and Receiving Tray (Drawing 2 of 2)

REF	PART NO.	DESCRIPTION	COMMENTS
1	1300155	Exhaust Pipe Elbow	Models UD13F078, UD13F079 and UD13F126 2 required; Model UD13F063 1 required
	1300156	Exhaust Pipe	Models UD13F078, UD13F079 and UD13F126 2 required; Model UD13F063 1 required
2	1300219	Cover Plate	
3	1300087	Finger Guard Shaft	Models through 3/31/12
	1301060	Finger Guard Shaft	Model UD13F126 2 required; Models UD13F063, UD13F078 and UD13F079 1 required; Models starting 4/1/12
4	1300326	Bracket	2 required
5	1300181	Spring	Model UD13F126 2 required; Models UD13F063, UD13F078 and UD13F079 1 required
6	1300105	Blower Wheel	
7	1300328	Front Panel Bracket	2 required
8	1301093	Left Frame	Models starting 4/1/12; Beige
	1301094	Left Frame	Models starting 4/1/12; Gray
9	1300218	Cover Plate	
10	1300330	Electrical Box	
11	1300216	Left Panel	Models through 3/31/12
	1301096	Left Panel	Models starting 4/1/12
12	1300874	Safety Disc	
13	1300103	Crank Handle Pivot	
14	1300094	Crank Handle	Models through 5/15/05
	1300114	Crank Handle	Models starting 5/15/05; 5 mm Allen

info@zipnasklade.ru
8(800)500-69-51

© Copyright, Alliance Laundry Systems LLC – DO NOT COPY or TRANSMIT

Tension Bearing and Side Roller

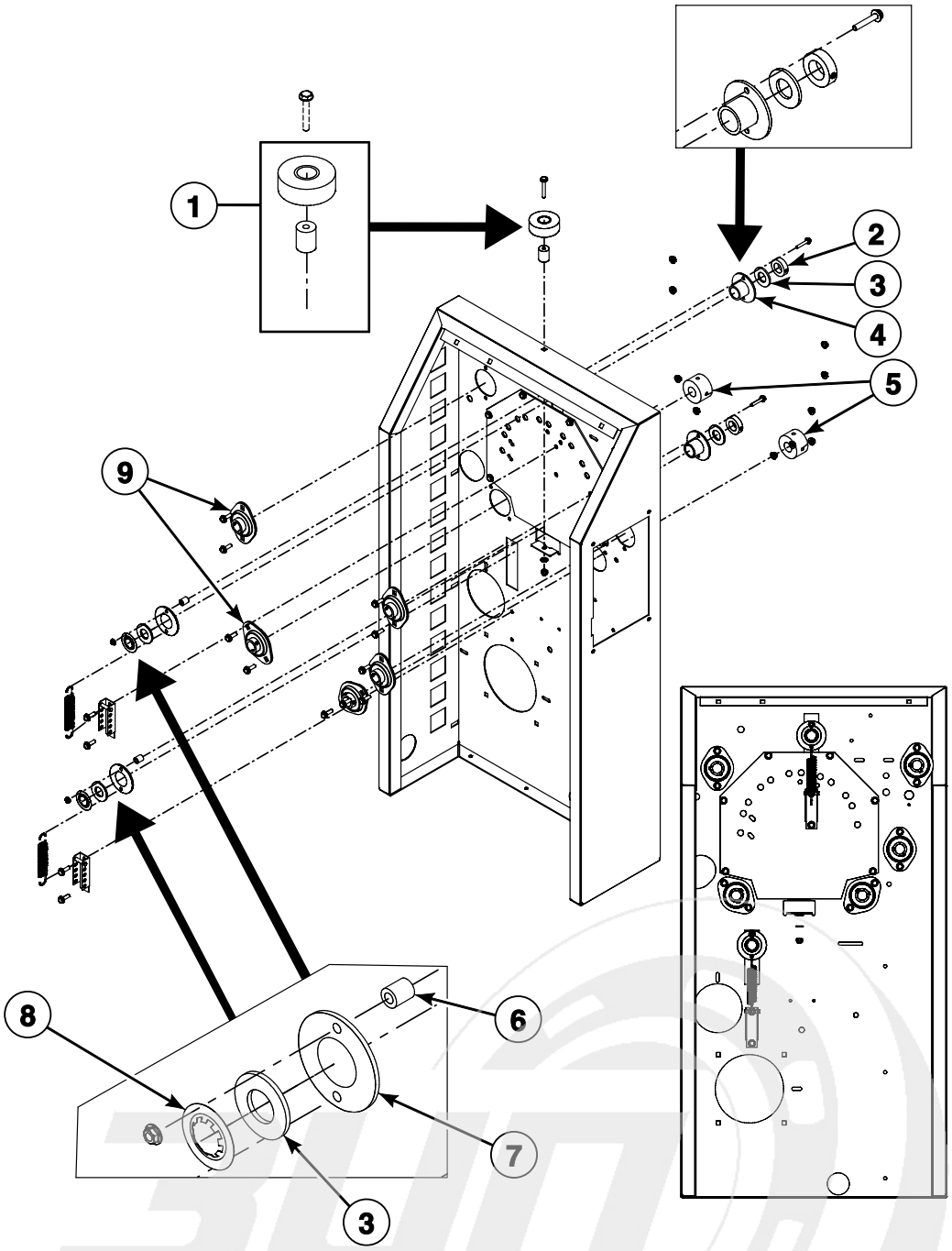

FWF44P_1300576

info@zipnasklade.ru
8(800)500-69-51

© Copyright, Alliance Laundry Systems LLC – DO NOT COPY or TRANSMIT

Tension Bearing and Side Roller

REF	PART NO.	DESCRIPTION	COMMENTS
1	1300084	Side Roller	2 required
2	1300100	Collar	2 required
3	1300359	Washer	4 required
4	1300092P	Tension Bearing	4 required
5	1300860	Collar	Model UD13F126; 8 required; Stop ring
	1300585P	Collar	Model UD13F126; 4 required
	1300083P	Collar	All other models; 4 required
6	1300098	Tension Bearing Spacer	4 required
7	1300099	Tension Bearing Retainer	4 required
8	1300157	Nut	4 required
9	1300124P	Bearing	Model UD13F126; 10 required
	1300096P	Roll Bearing	All other models; Use M6 x 1 setscrews with bearing; Attach with M6 x 16 nut; 10 required

info@zipnasklade.ru
8(800)500-69-51

© Copyright, Alliance Laundry Systems LLC – DO NOT COPY or TRANSMIT

Sprockets and Chain Tensioner

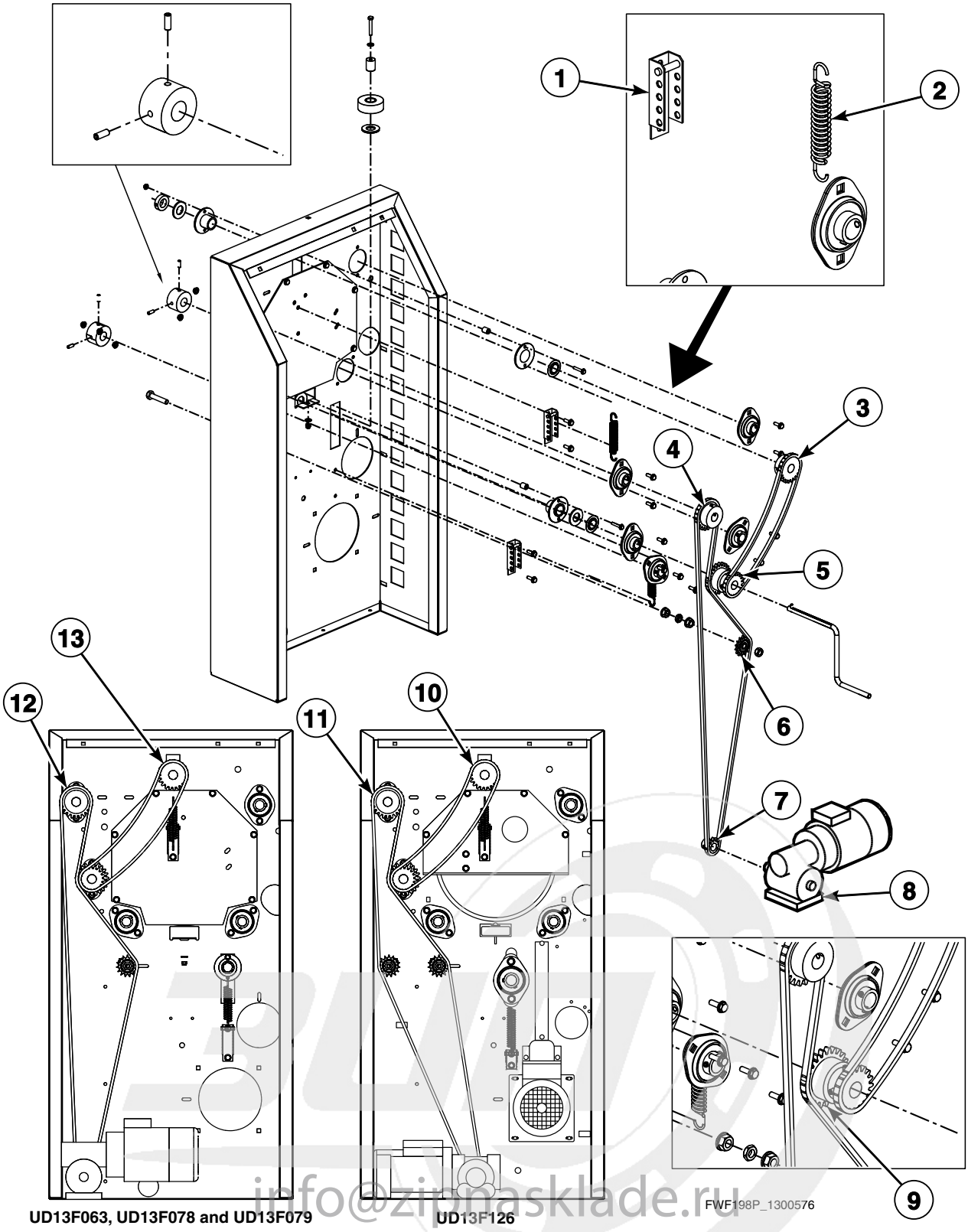

UD13F063, UD13F078 and UD13F079

UD13F126

info@zipmasklade.ru
8(800)500-69-51

© Copyright, Alliance Laundry Systems LLC – DO NOT COPY or TRANSMIT

Sprockets and Chain Tensioner

REF	PART NO.	DESCRIPTION	COMMENTS
	1300875	Chain Link	2 required; Use with items 10-13; Models UD13F078 and UD13F079
	1300877	Pin	2 required; Use with items 10-13; Models UD13F078 and UD13F079
1	1300329	Tension Bracket	4 required
2	1300158	Tension Spring	4 required
3	1300090	Press Roll Sprocket	Model UD13F126
	1300091	Press Roll Sprocket	All other models
4	1300090	Press Roll Sprocket	Model UD13F126
	1300088	Pick-Up Roll Sprocket	All other models
5	1300091	Press Roll Sprocket	Model UD13F126
	1300090	Press Roll Sprocket	All other models
	1300089	Drive Roll Sprocket	Use with 1300090 and 1300091
6	1300880	Idler Sprocket	
7	1300121	Motor Sprocket	
8	1300869P	Motor and Gear Case Assembly	Model UD13F126
	1300881	Cylinder Motor	All other models
9	1301099	Pinion	Model UD13F126
	1300089	Drive Roll Sprocket	All other models
10	1300878P	Press Roll Chain	Model UD13F126 through 3/31/12
	1301118	Drive Motor Chain	Model UD13F126 starting 4/1/12
11	1300871	Drive Motor Chain	Model UD13F126; This chain made up of 1300097P Drive Chain and 1300877 Pin
12	1300097P	Drive Chain	Models UD13F063, UD13F078 and UD13F079; 1.9 meters
13	1300870P	Press Roll Drive Chain	Models UD13F063, UD13F078 and UD13F079

info@zipnasklade.ru
8(800)500-69-51

© Copyright, Alliance Laundry Systems LLC – DO NOT COPY or TRANSMIT

Heating Elements and Fan Motor - Electric Heat Models

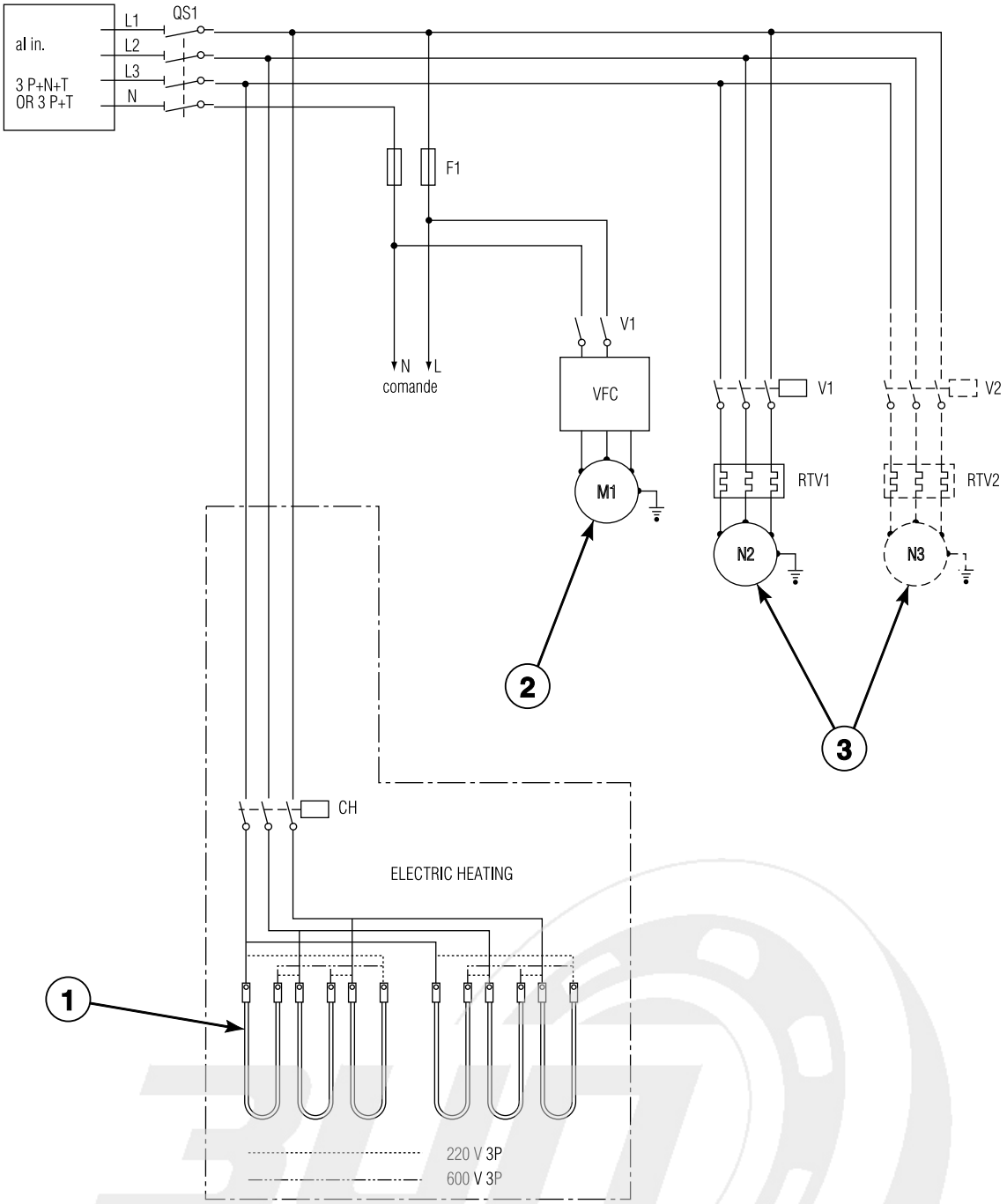

info@zipnasklade.ru
8(800)500-69-51

© Copyright, Alliance Laundry Systems LLC – DO NOT COPY or TRANSMIT

Heating Elements and Fan Motor - Electric Heat Models

REF	PART NO.	DESCRIPTION	COMMENTS
1	1300073	Heating Element	Model UD13F063; 6 required
	1300075	Heating Element	Models UD13F078 and UD13F079; 6 required
	1300077	Heating Element	Model UD13F126; 12 required
2	1300869P	Motor and Gear Case Assembly	Model UD13F126
	1300881	Cylinder Motor	All other models
3	1300063	Fan Motor	

info@zipnasklade.ru
8(800)500-69-51

© Copyright, Alliance Laundry Systems LLC – DO NOT COPY or TRANSMIT

Electric Heat Roll - Electric Heat Models

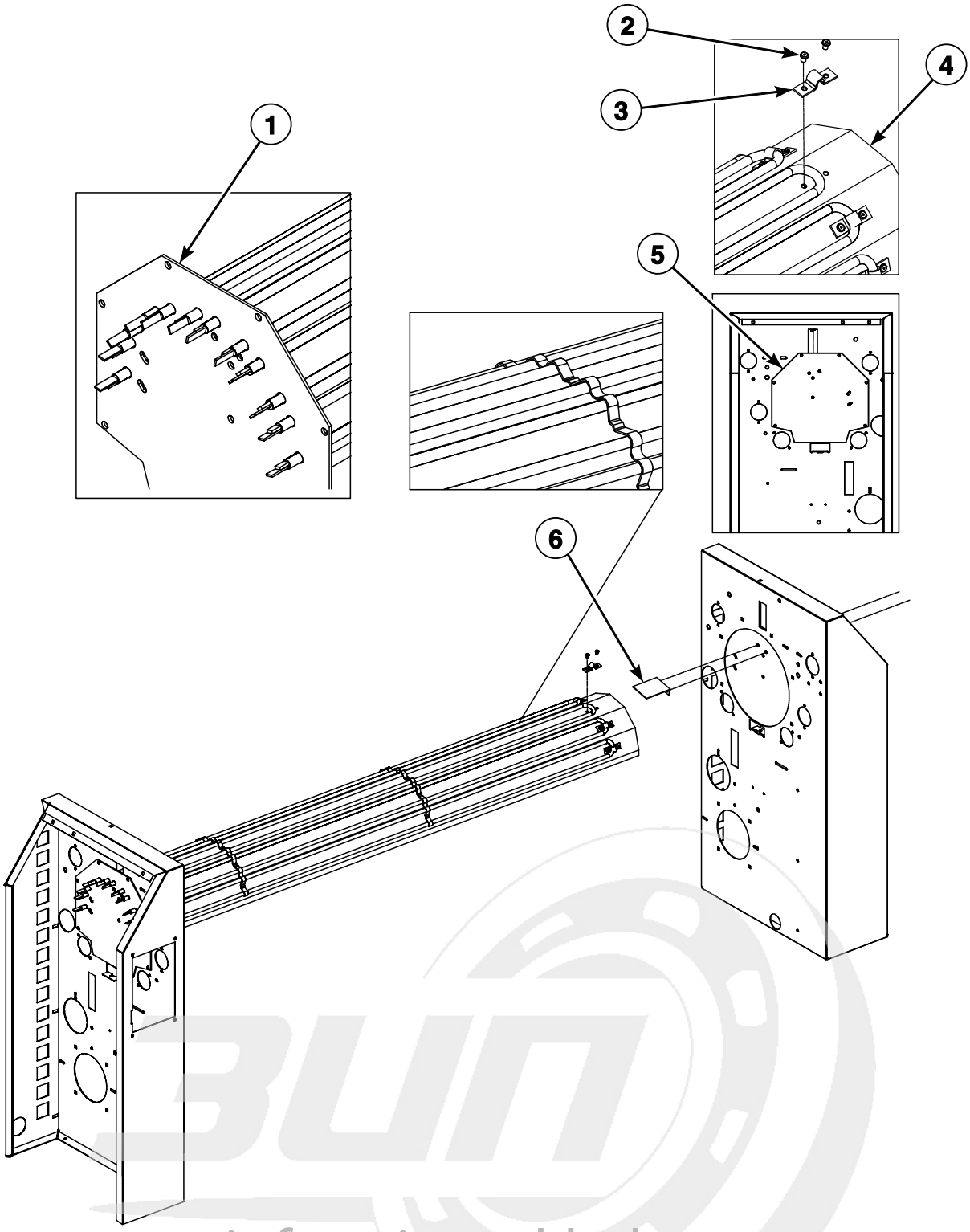

FWF46P_1300576

info@zipnasklade.ru
8(800)500-69-51

© Copyright, Alliance Laundry Systems LLC – DO NOT COPY or TRANSMIT

Electric Heat Roll - Electric Heat Models

REF	PART NO.	DESCRIPTION	COMMENTS
1	1300332	Heating Element End Plate	Left
2	1300510	Pop Rivet	12 required
3	1300178	Heating Element Clamp	6 required
4	1300397	Heating Element Support	Models UD13F078 and UD13F079 1 required; Model UD13F126 2 required
	1300379	Heating Element Support	Model UD13F063
5	1300367	Heating Element End Plate	
6	1300333	Bracket	

info@zipnasklade.ru
8(800)500-69-51

© Copyright, Alliance Laundry Systems LLC – DO NOT COPY or TRANSMIT

Burner and Exhaust - Gas Heat Models

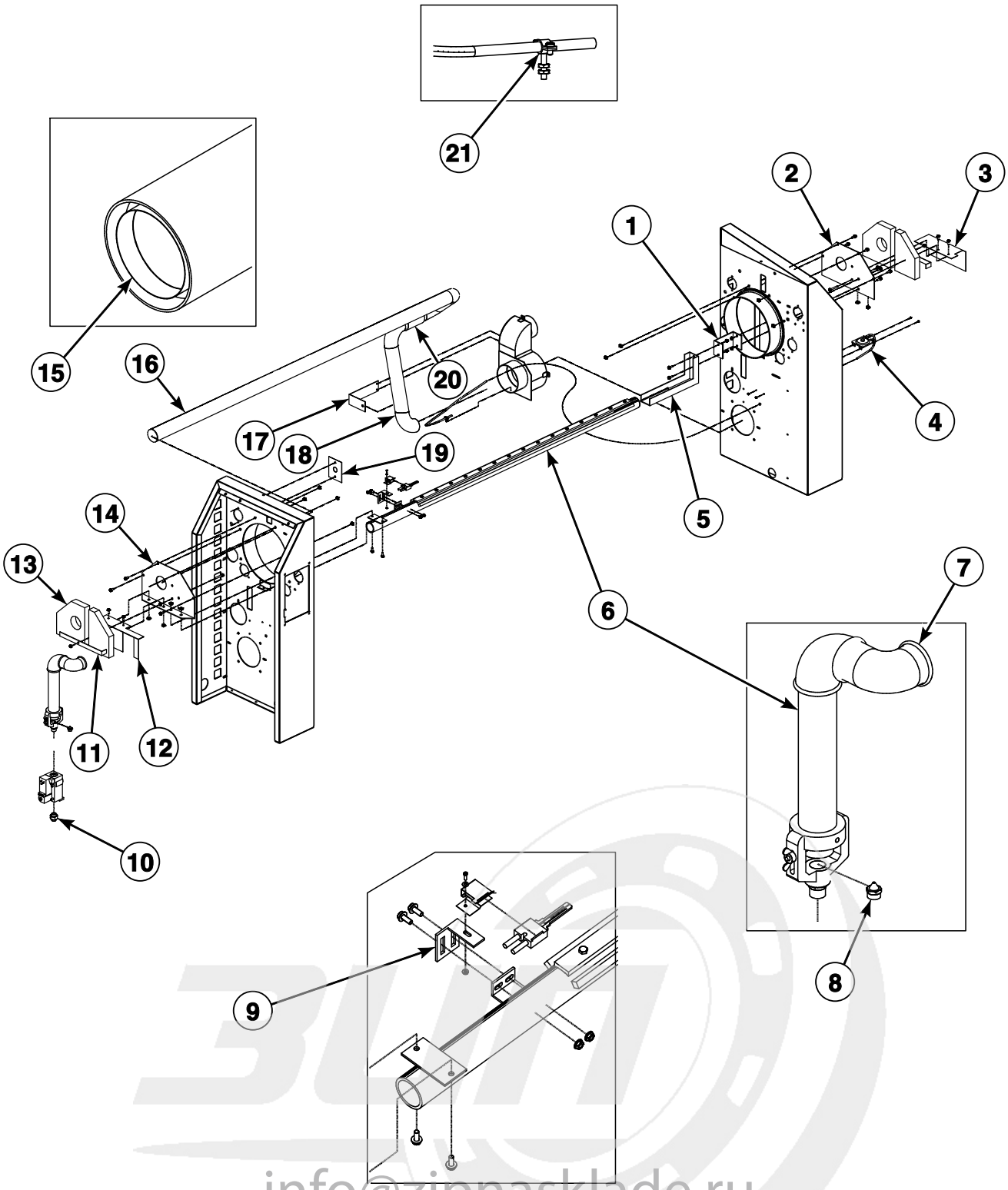

FWF47P_1300576

info@zipnasklade.ru
8(800)500-69-51

© Copyright, Alliance Laundry Systems LLC – DO NOT COPY or TRANSMIT

Burner and Exhaust - Gas Heat Models

REF	PART NO.	DESCRIPTION	COMMENTS
	1300564	L.P. Valve Kit	
	1301050	Burner Assembly	Model UD13F126; Includes 130006 Igniter, 1300438 Igniter Bracket, 1300080 Gas Valve, 1300192 Burner, 1300501 Gas Screen and 1300503 Gas Deflector
1	1300364	Burner Support Bracket	
2	1300581	Right Flange	Model UD13F126
	1300334	Right Gas Heat Bracket	All other models
3	1300358	Bracket	
4	1300193	Pressure Switch Tubing	
5	1300335	Burner Support Bracket	
6	1300183	Burner	Models UD13F078 and UD13F079
	1300166	Burner	Model UD13F063
	1300192	Burner	Model UD13F126
7	1300172	Elbow	
8	1300167	Burner Orifice	
	1300781	Burner Orifice	Specify type of gas
	1300606	Burner Orifice	1.5 mm (blank)
	1300607	Burner Orifice	2.35 mm; Liquid Petroleum Gas (L.P.)
	1300538	Burner Orifice	2.5 mm; L.P.
	1300539	Burner Orifice	3 mm; L.P.
	1300854	Burner Orifice	3.2 mm; L.P.
	1300540	Burner Orifice	3.5 mm; L.P.
	1300541	Burner Orifice	4.1 mm; L.P.
	1300542	Burner Orifice	4.4 mm; L.P.
	1300862	Burner Orifice	4.1 mm; Natural Gas (N.G.)
	1300544	Burner Orifice	4.8 mm; N.G.
	1300855	Burner Orifice	5.0 mm; N.G.
	1300856	Burner Orifice	5.5 mm; N.G.
	1300857	Burner Orifice	6.4 mm; N.G.
	1300545	Burner Orifice	7.1 mm; N.G.
9	1300340	Igniter Bracket	Models through 3/31/12
	1300438	Igniter Bracket	Models starting 4/1/12
10	1300171	Gas Valve Fitting	BPT adapter
11	1300360	Insulation Bracket	Model UD13F126 1 required; Models UD13F063, UD13F078 and UD13F079 2 required
12	1300362	Bracket	
13	1300147	Insulation	2 required
14	1300366	Left Gas Heat Bracket	
15	1300363	Gas Deflector	
16	1300403	Gas Exhaust Pipe	Models UD13F078 and UD13F079
	1300384	Gas Exhaust Pipe	Model UD13F063
	1300584	Exhaust Tube	Model UD13F126
17	1300339	Exhaust Pipe Bracket	
18	1300338	Gas Exhaust Pipe	
19	1300221	Plate	2 required
20	1300336	Exhaust Sleeve	
21	1300562P	Thermostat Bracket	

info@zipnasklade.ru
8(800)500-69-51

© Copyright, Alliance Laundry Systems LLC – DO NOT COPY or TRANSMIT

Labels

FWF148P_1300576

info@zipnasklade.ru
8(800)500-69-51

© Copyright, Alliance Laundry Systems LLC – DO NOT COPY or TRANSMIT

Labels

REF	PART NO.	DESCRIPTION	COMMENTS
	1301119	Conversion Label	Natural Gas (N.G.) to Liquid Petroleum (L.P.)
1	502511	Electrical Shock Label	
2	F200318200	Cover Decal	
3	M411815	Vent and Thimble Caution Label	
4	70360901	Belt Edging	
5	500316	Warning Label	
6	N/A	Hot Surface Warning Plate	
7	501140	Natural Gas Notice Label	
8	M412238	Rotating Warning Sticker	

N/A = Part no longer available

info@zipnasklade.ru
8(800)500-69-51

© Copyright, Alliance Laundry Systems LLC – DO NOT COPY or TRANSMIT

Notes

info@zipnasklade.ru
8(800)500-69-51

© Copyright, Alliance Laundry Systems LLC – DO NOT COPY or TRANSMIT

Parts Index

A

Auxiliary Contactor
1300017 ..... 9, 11
Auxiliary Feed Roll
1300496 15

B

Base
1301078 17
1301079 17
1301080 17
Bearing
1300124P 21
Belt Edging
70360901 31
Blower Housing
1301064 17
Blower Wheel
1300105 ..... 17, 19
Bracket
1300326 19
1300333 27
1300358 29
1300362 29
1300859-L 17
1300859-R 17
1301086 17
Burner
1300166 29
1300183 29
1300192 29
Burner Assembly
1301050 29
Burner Orifice
1300167 29
1300538 29
1300539 29
1300540 29
1300541 29
1300542 29
1300544 29
1300545 29
1300606 29
1300607 29
1300781 29
1300854 29
1300855 29
1300856 29
1300857 29
1300862 29
Burner Support Bracket
1300335 29
1300364 29

C

Chain Link
1300875 23
Clamp
1300163 13
1300164 13
Collar
1300083P 21
1300100 21
1300585P 21
1300860 21
Compression Roll Pad
1300197P 13
Contact Block
44018701 ..... 5, 7, 9, 11
Contactor
1300014 ..... 5, 9, 11
Control Panel
1300526P 5, 7
Conversion Label
1301119 31
Cover Decal
F200318200 31
Cover Plate
1300218 19
1300219 19
Crank Handle
1300094 19
1300114 19
Crank Handle Pivot
1300103 19
Cylinder Motor
1300881 ..... 23, 25

D

Delivery Tray Assembly
1301123 17
Drive Chain
1300097P 23
Drive Motor Chain
1300871 23
1301118 23
Drive Roll Roll Pin
1300159 15
Drive Roll Shaft
1300102 15
Drive Roll Sprocket
1300089 23

E

Elbow
1300172 29
Electrical Box
1300330 19

info@zipnasklade.ru
8(800)500-69-51

N/A items do not appear in index.

© Copyright, Alliance Laundry Systems LLC – DO NOT COPY or TRANSMIT

Electrical Shock Label
502511 31
Emergency Stop Kit
44018701P 5, 7
Emergency Switch
1300559 ..... 5, 7
Exhaust Pipe
1300156 19
Exhaust Pipe Bracket
1300339 29
Exhaust Pipe Elbow
1300155 ..... 17, 19
Exhaust Sleeve
1300336 29
Exhaust Tube
1300584 29

F

Fan Inverter
1300054-1 7
Fan Motor
1300063 25
Feed Board
1300390 17
1301082 17
1301083 17
1301084 17
Feed Ribbon
1300153P 13
1300160 13
Feed Ribbon Guide
1300374 15
1300395 15
Feed Ripon Guide
1300395 15
Feed Tray
1300375 17
1301087 17
1301088 17
Finger Guard
1300371 17
1300389 17
1300592 17
1301090 17
Finger Guard Head Switch
1300047 ..... 9, 11
Finger Guard Shaft
1300087 19
1301060 19
Front Panel
1300391 17
1301065 17
1301066 17
1301067 17
Front Panel Bracket
1300328 19
Fuse
1300530 7
1300531 5
1300533 7
1300547 ..... 5, 7
1300563 ..... 9, 11
Fuse Holder
1300529 ..... 5, 7

G

Gas Deflector
1300363 29
Gas Exhaust Pipe
1300338 29
1300384 29
1300403 29
Gas Heat Contactor
1300525P 7
Gas Reset Pushbutton Head
1300519 11
Gas Valve
1300518 ..... 7, 11
1300627 11
Gas Valve Fitting
1300171 29
Gas Valve Harness
1300007 7
Ground Terminal Block
1300555 ..... 5, 7
Guide Rail
1300505 15
Guide Tape
1300165 13

H

Harness
1300885 11
Heat Contactor
1300012 5
1300013 9
Heat Pilot Light
1300025 ..... 9, 11
Heated Roll
1300394 15
Heated Roll Shaft
1300138 15
Heated Rolll
1300377 15
Heating Element
1300073 25
1300075 25
1300077 25
Heating Element Clamp
1300178 27
Heating Element End Plate
1300332 27
1300367 27
Heating Element Support
1300379 27
1300397 27

I

Idler Sprocket
1300880 23

N/A items do not appear in index.

info@zipnaskladе.ru
8(800)500-69-51

© Copyright, Alliance Laundry Systems LLC – DO NOT COPY or TRANSMIT

Igniter
1300006P 7, 11
Igniter Bracket
1300340 29
1300438 29
Ignition Control
1300008 7
1300520P 11
Insulation
1300147 29
Insulation Bracket
1300360 29
Inverter Drive
1300038 ..... 5, 9, 11
1300596 7
Ironing Roll
1300599 15

L

Left Frame
1301093 19
1301094 19
Left Gas Heat Bracket
1300366 29
Left Panel
1300216 19
1301096 19
L.P. Valve Kit
1300564 29

M

Main Switch
1300048P 9, 11
Main Switch Assembly
1300049P 9, 11
Main Switch Body
1300051 ..... 9, 11
Motor and Gear Case Assembly
1300869P 23, 25
Motor Sprocket
1300121 23

N

Nameplate Overlay
1300000 17
1300001 17
1300002 17
Natural Gas Notice Label
501140 31
Neutral Terminal
1300050P 9, 11
Nut
1300157 21

P

Panel Raiser
1301069 17
Pick Up Roll Shaft
1300086L 15
1300086R 15
Pick-Up Roll
1300381 15
1300398P 15, 17
Pick-Up Roll Roll Pin
1300176 15
Pick-Up Roll Sprocket
1300088 23
Pilot Light Bulb
1300514 11
Pin
1300877 23
Pinion
1301099 23
Plate
1300221 29
Pop Rivet
1300510 27
1300511 15
Position Switch Body
1300043 ..... 5, 7, 9, 11
Position Switch Head
1300044 ..... 5, 7, 9, 11
Press Roll Chain
1300878P 23
Press Roll Drive Chain
1300870P 23
Press Roll Pad
1300199 13
1300200P 13
Press Roll Sprocket
1300090 23
1300091 23
Pressure Roll
1300383 15
1300400 15
1300497 15
Pressure Switch
1300033P 7
Pressure Switch Tubing
1300193 29
Printed Circuit Board
1300527P 5, 7
Pushbutton
44018801 ..... 5, 7
Pushbutton Body
1300045 11
Pushbutton Head
1300039 ..... 9, 11

R

Rail
1300494 15

info@zipnasklade.ru
8(800)500-69-51

N/A items do not appear in index.

© Copyright, Alliance Laundry Systems LLC – DO NOT COPY or TRANSMIT

Rear Panel
1300369 17
1300387 17
1300491 17

Receiving Tray
1301075 17
1301076 17

Receiving Tray End Panel
1300239 17
1301074 17

Return Ribbon
1300161 13

Return Ribbon Pin
1301133 13

Return Ribbon Roll
1300385 15
1300401 15
1300884 15
1300889 15

Ribbon
1300580P 13

Ribbon Guide
1300378 15
1300598 15

Right Blower Housing
1300327 17

Right Flange
1300581 29

Right Frame
1300213 17
1301091 17
1301092 17

Right Gas Heat Bracket
1300334 29

Right Panel
1300215 17
1301095 17

Roll Bearing
1300096P 21

Roll Tape
1300162 13

Roller
1300506 15

Rotating Warning Sticker
M412238 31

S

Safety Disc
1300874 19

Safety Microswitch
1300521 ..... 5, 7

Sensor
1301116 15

Sensor Spring
1300202 15

Shaft
1300382 15
1300402 15

Side Roller
1300084 21

Speed Potentiometer
1300026 ..... 9, 11

Spring
1300181 19

Switch Body
1300041 ..... 9, 11

Switch Head
1300040 ..... 9, 11

T

Temperature Sensor
1300565P 5, 7

Tension Bearing
1300092P 21

Tension Bearing Retainer
1300099 21

Tension Bearing Spacer
1300098 21

Tension Bracket
1300329 23

Tension Spring
1300158 23

Terminal Block
1300021 ..... 5, 7, 9, 11
1300557 ..... 5, 7

Textile Scraper Kit
1300220P 15

Textile Scraper Rail
1300380 15
1300399 15
1300502 15

Thermal Relay
1300010 5
1300015 ..... 9, 11

Thermostat
1300079P 5, 7, 9, 11

Thermostat Bracket
1300562P 29

Top Panel
1300370 17
1300388P 17
1301070 17
1301071 17
1301072 17

Transformer
1300522 7
1300534P 5
1300883 ..... 9, 11

U

Upper Panel
1300586 17

V

Vent and Thimble Caution Label
M411815 31

info@zipnasklade.ru
8(800)500-69-51

N/A items do not appear in index.

© Copyright, Alliance Laundry Systems LLC – DO NOT COPY or TRANSMIT

W

Warning Label
500316 31
Washer
1300359 21

info@zipnasklade.ru
8(800)500-69-51

N/A items do not appear in index.

© Copyright, Alliance Laundry Systems LLC – DO NOT COPY or TRANSMIT

Notes

info@zipnasklade.ru
8(800)500-69-51

© Copyright, Alliance Laundry Systems LLC – DO NOT COPY or TRANSMIT