Washer-Extractor

Cabinet Freestanding

Refer to Page 5 for Model Numbers

Parts

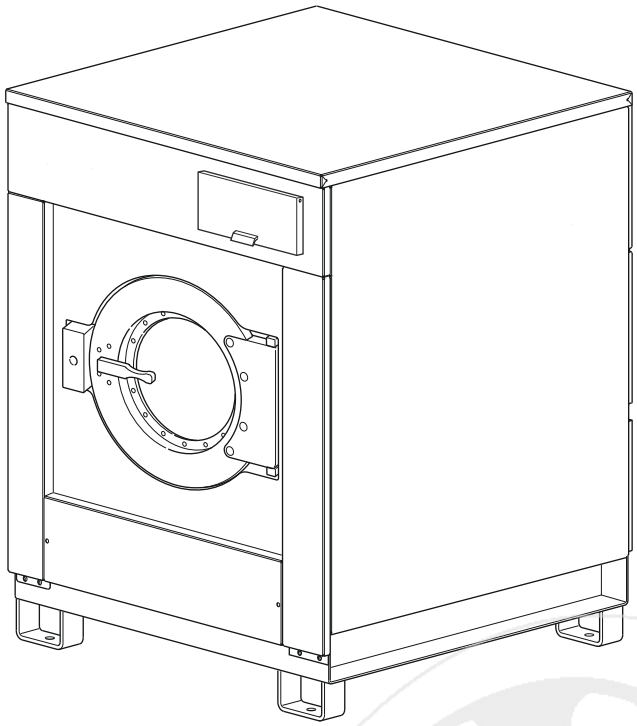

CFD18C_9001759

info@zipnasklade.ru
8(800)500-69-51

Alliance Laundry Systems

www.alliancelaundry.com

Part No. 9001759R20
February 2015

info@zipnasklade.ru
8(800)500-69-51

Table of Contents

Title	Page
Parts Ordering Information	3
Serial Plate Location	3
Model Identification	5
Cabinet Freestanding Washer-Extractor Product Overview - *X Models	6
Cabinet Freestanding Washer-Extractor Product Overview - *HF Models	8
Frame	10
Shock and Spring Assembly	12
Shell and Front Panel - *X165 Design 6 Models	14
Shell and Front Panel - All Models Except *X165 Design 6 Models	16
Bearing Assembly (Drawing 1 of 3) - Models Through 1/30/2011	18
Bearing Assembly (Drawing 2 of 3) - Models Through 1/30/2011	20
Bearing Assembly (Drawing 3 of 3) - Models Through 1/30/2011	22
Bearing Assembly - Models Starting 1/31/2011	24
Basket, Pulley and Belt - Models Through 1/30/2011	26
Basket, Pulley and Belt - Models Starting 1/31/2011	28
Motor	30
Drain Assembly	32
Drain Valve - Normally Open	34
Drain Valve - Normally Closed	36
Door Lock	38
Door - *X165 Design 6 Models	40
Door - All Models Except *X165 Design 6 Models	42
Control Panel - *X Models	44
Control Panel - PS40F	46
Control Panel - Cygnus Professional	48
Control Panel - PRO	50
Control Panel - Cygnus Premium and Cygnus Ultra	52
Control Module	54
Top, Left Side and Front Panels	56
Back and Right Side Panels	58
Upper Back Panel (Drawing 1 of 5)	60
Upper Back Panel (Drawing 2 of 5)	62
Upper Back Panel (Drawing 3 of 5)	64
Upper Back Panel (Drawing 4 of 5)	66
Upper Back Panel (Drawing 5 of 5)	68
Supply Dispenser - Models Through 4/30/2009	70
Supply Dispenser - Models Starting 5/1/2009	72
Plumbing (Drawing 1 of 3)	74
Plumbing (Drawing 2 of 3)	76
Plumbing (Drawing 3 of 3)	78
Balance Switch	80

© Copyright 2015, Alliance Laundry Systems LLC

All rights reserved. No part of the contents of this book may be reproduced or transmitted in any form or by any means without the expressed written consent of the publisher.

info@zipnasklade.ru

8(800)500-69-51

Soap Pumps 82
Spray Pump 84
Electric Heating Option 86
Steam Heating Option - *HF165, *HF730 and *X165 Models 88
Steam Heating Option - *HF900 and *X200 Models 90
Parts Index 93

info@zipnasklade.ru
8(800)500-69-51

© Copyright, Alliance Laundry Systems LLC – DO NOT COPY or TRANSMIT

Parts Ordering Information

If literature or replacement parts are required, contact the source from whom the machine was purchased or contact Alliance Laundry Systems at (920) 748-3950 for the name and address of the nearest authorized parts distributor.

For technical assistance, call either of the numbers listed below:

(920) 748-3121 Ripon, Wisconsin

+32 56 41 20 54 Wevelgem, Belgium

Serial Plate Location

When calling or writing about your product, be sure to mention model and serial numbers. Model and serial numbers are located on serial plate(s).

info@zipnasklade.ru
8(800)500-69-51

© Copyright, Alliance Laundry Systems LLC – DO NOT COPY or TRANSMIT

Notes

info@zipnasklade.ru
8(800)500-69-51

© Copyright, Alliance Laundry Systems LLC – DO NOT COPY or TRANSMIT

Model Identification

Information in this manual is applicable to these washer-extractor models:

CHF165ANH
CHF730U
CS165_CYGNUS-ULTRA
HF730_CYGNUS-PREM_OPL
HF730_CYGNUS-PRO
HF730_PS40F
HF900_CYGNUS-PREM_OPL
HF900_CYGNUS-PRO
HF900_PS40F

HX165PVNU6
HX165PVNU7
HX165PVPU7
HX165PVQU6
HX165PVQU7
HX165_WE-8
HX200PVNU7
HX200PVPU7
HX200PVQU7
HX200_WE-8
IHF165ANH
IHF165ZNH
IHF730ANH
IHF730U
IHF730ZNH
IHF900ANH
IHF900ZNH

SX165PVNU6
SX165PVNU7
SX165PVPU7
SX165PVQU6
SX165PVQU7
SX165Z
SX165_WE-8
SX200PVNU7
SX200PVPU7
SX200PVQU7
SX200Z
SX200_WE-8
UX165PVNU6
UX165PVNU7
UX165PVPU6
UX165PVPU7
UX165PVQU6
UX165PVQU7
UX165Z
UX165_WE-8
UX200PVNU7
UX200PVPU7
UX200PVQU7
UX200Z
UX200_WE-8

info@zipnasklade.ru
8(800)500-69-51

© Copyright, Alliance Laundry Systems LLC – DO NOT COPY or TRANSMIT

Cabinet Freestanding Washer-Extractor Product Overview - *X Models

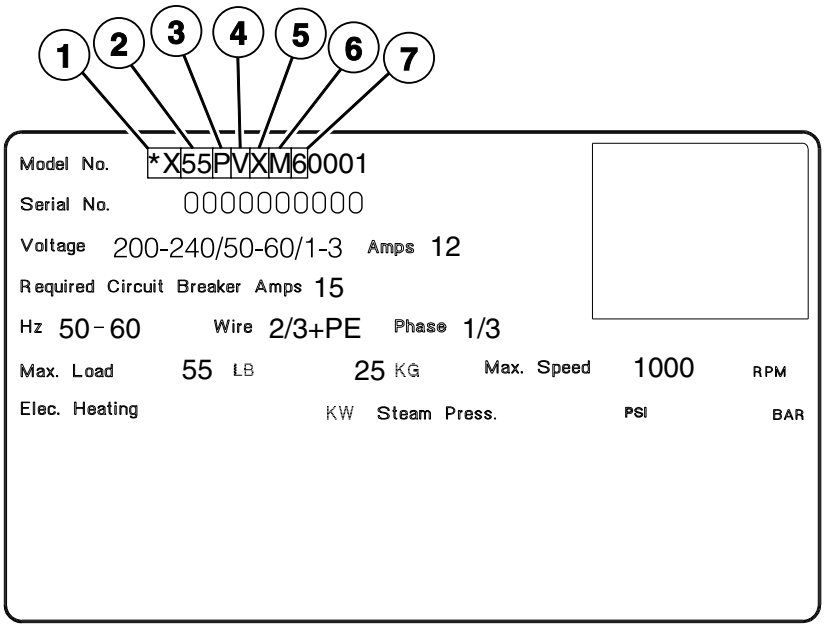

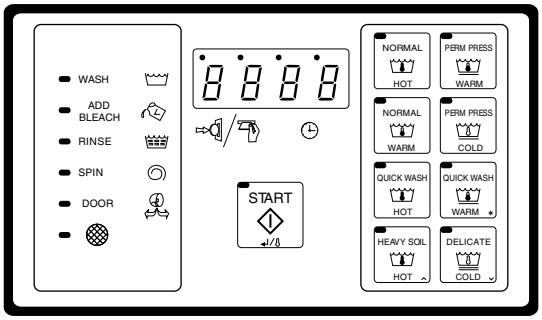

B Computer (Domestic)

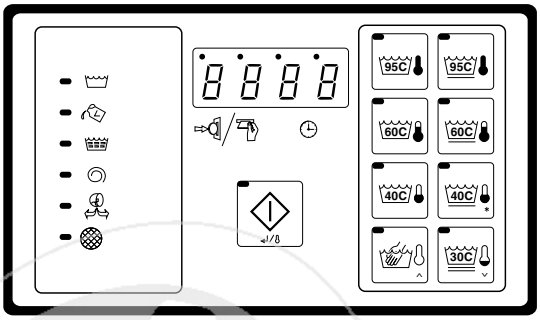

B Computer (International)

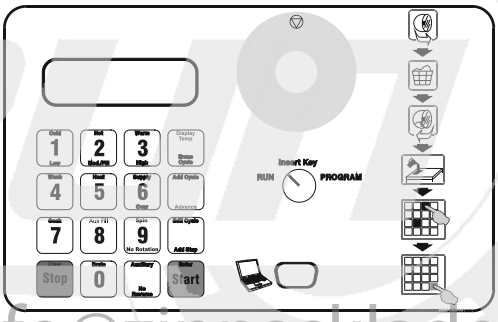

WE-8 Micro

CFD266P_9001759

info@zipnasklade.ru
8(800)500-69-51

© Copyright, Alliance Laundry Systems LLC – DO NOT COPY or TRANSMIT

Cabinet Freestanding Washer-Extractor Product Overview - *X Models

REF	PART NO.	DESCRIPTION	COMMENTS
1	-	Product Family	HX NX SX UX
2	-	Capacity (Pounds)	18 25 30 35 55 75 100 135 165 200
3	-	Control	B (B Computer) P (WE-8 Micro) Z (PRO)
4	-	Speed	V (Variable)
5	-	Voltage	N (440-480/50-60/3/3) P (380-415/50-60/3/3) Q (200-240/50-60/3/3) X (200-240/50-60/1/3)
6	-	OEM	A F M U
7	-	Design	6 and 7

info@zipnasklade.ru
8(800)500-69-51

© Copyright, Alliance Laundry Systems LLC – DO NOT COPY or TRANSMIT

Cabinet Freestanding Washer-Extractor Product Overview - *HF Models

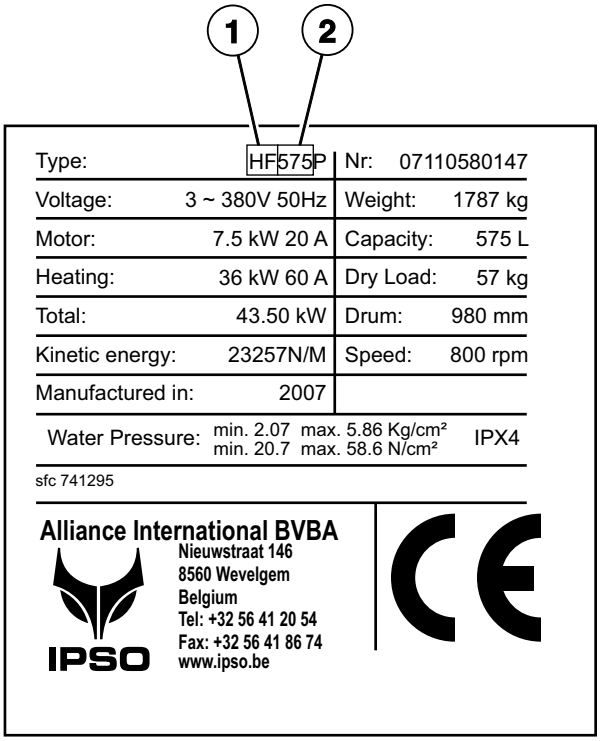

Label 1

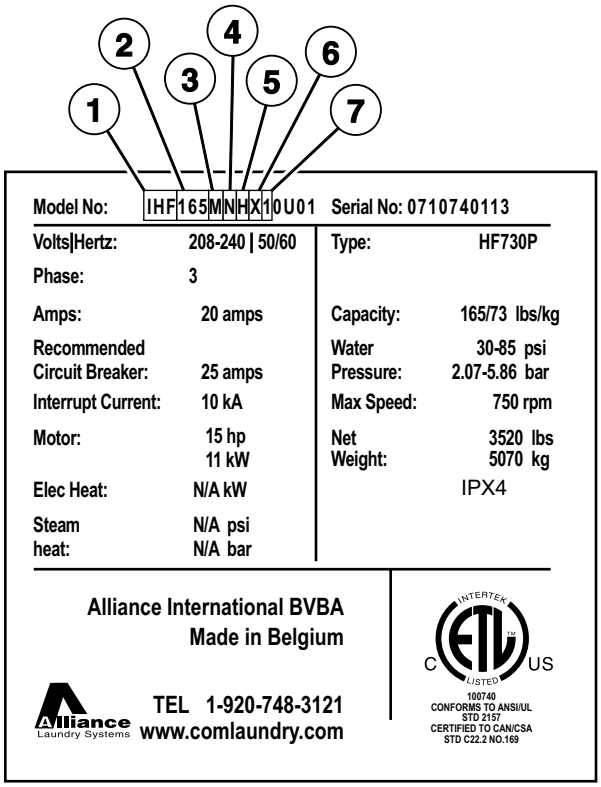

Label 2

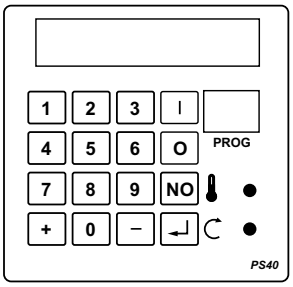

PS40

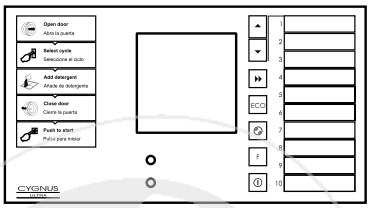

Cygnus Ultra

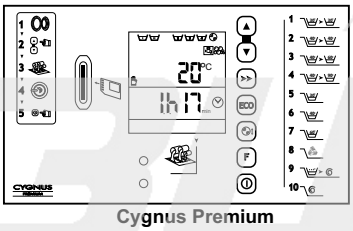

Cygnus Premium

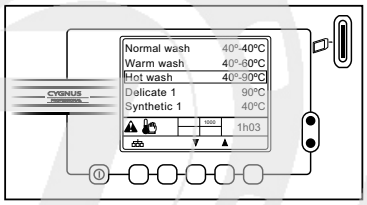

Cygnus Professional

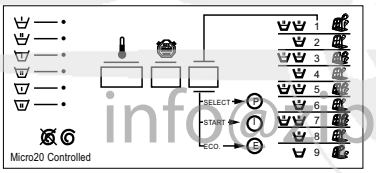

Micro 20

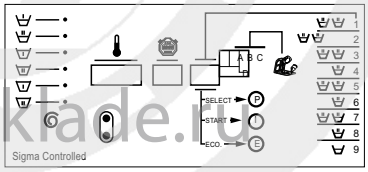

Sigma

CFD620P_9001759

info@konasklade.ru
8(800)500-69-51

© Copyright, Alliance Laundry Systems LLC – DO NOT COPY or TRANSMIT

Cabinet Freestanding Washer-Extractor Product Overview - *HF Models

REF	PART NO.	DESCRIPTION	COMMENTS
1	-	Product Family	CHF HF IHF
2	-	Capacity (Pounds)	165 730 900
3	-	Control	A (PS40F) CAM-Timer Cygnus-Prem Cygnus-Ultra M (Micro-20) Micro-9 PC30 PS40 Sigma U (Cygnus-Ultra) Z (Cygnus-Pro)
4	-	Actuation	N (Non-Coin)
5	-	Speed	H (High Speed)
6	-	Voltage	N (440-480/50-60/3/3) P (380-415/50-60/3/3) Q (208-240/50-60/3/3) X (200-240/50-60/1/3)
7	-	Design	1

info@zipnasklade.ru
8(800)500-69-51

© Copyright, Alliance Laundry Systems LLC – DO NOT COPY or TRANSMIT

Frame

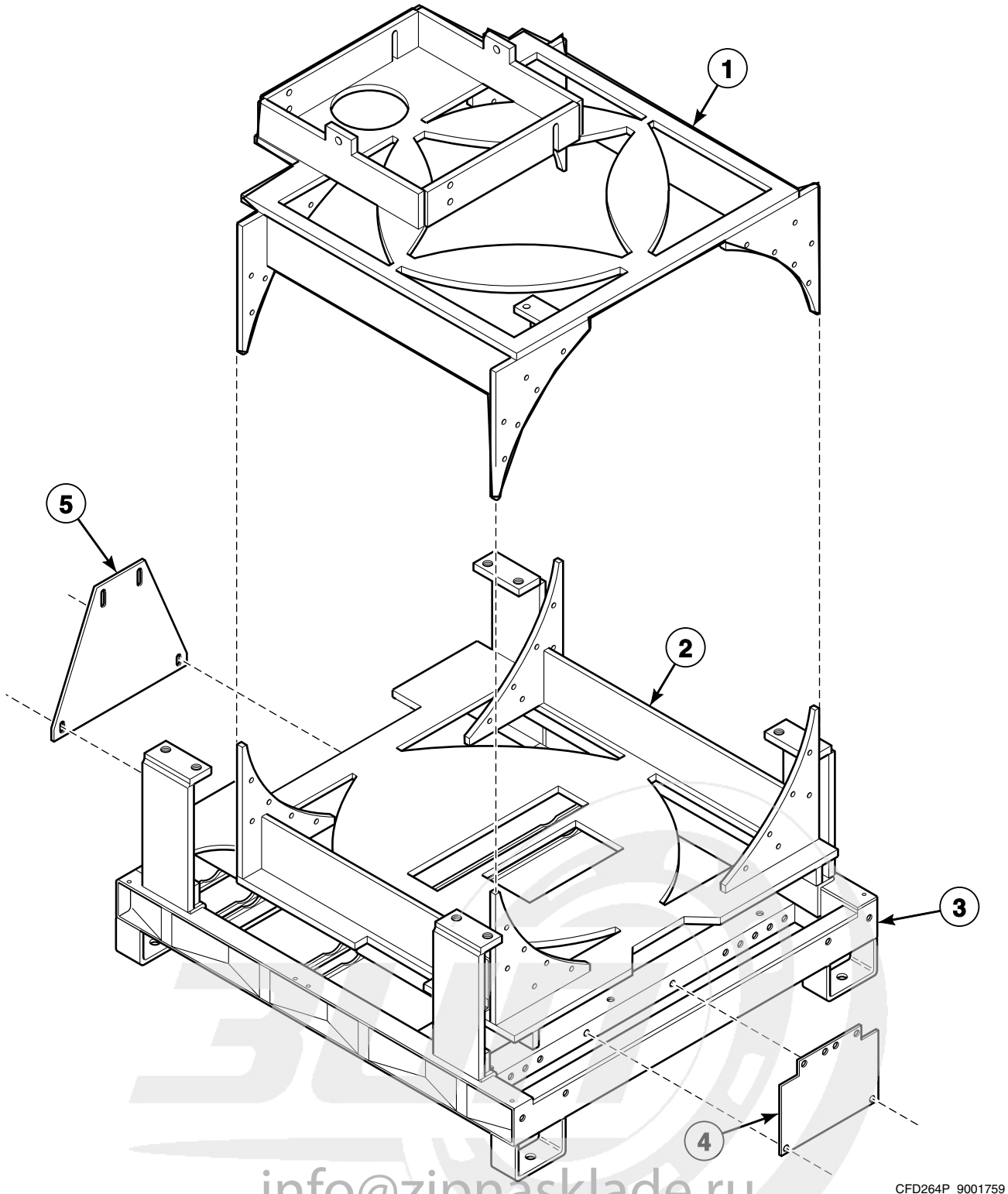

info@zipnasklade.ru
8(800)500-69-51

© Copyright, Alliance Laundry Systems LLC – DO NOT COPY or TRANSMIT

Frame

REF	PART NO.	DESCRIPTION	COMMENTS
1	253/10503/00	Upper Support	*HF165, *HF730 and *X165 models
	290/10503/00	Upper Support	*HF900 and *X200 models
2	253/10502/00	Lower Support	*HF165, *HF730 and *X165 models
	290/10502/00	Lower Support	*HF900 and *X200 models
3	253/10501/00	Frame	*HF165, *HF730 and *X165 models
	290/10501/00	Frame	*HF900 and *X200 models
4	173/00015/00	Shipping Bracket	Front
5	173/00054/00	Shipping Bracket	Rear

info@zipnasklade.ru
8(800)500-69-51

© Copyright, Alliance Laundry Systems LLC – DO NOT COPY or TRANSMIT

Shock and Spring Assembly

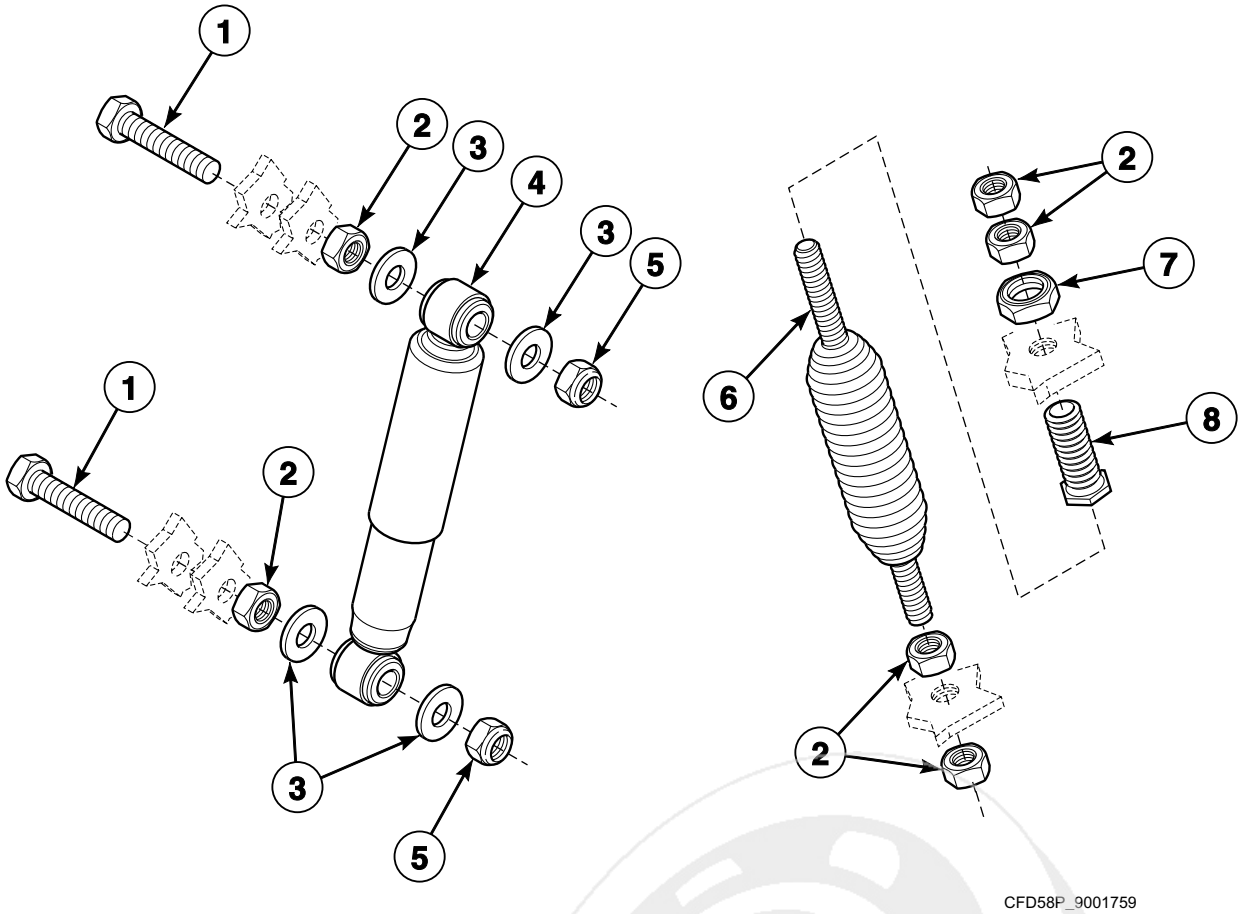

info@zipnasklade.ru
8(800)500-69-51

© Copyright, Alliance Laundry Systems LLC – DO NOT COPY or TRANSMIT

Shock and Spring Assembly

REF	PART NO.	DESCRIPTION	COMMENTS
1	206/00071/00	Bolt	
2	204/00012/00	Nut	
3	B12522101	Washer	
4	247/00008/00	Shock Absorber	
	211/00137/10	Shock Absorber Bushing	
5	204/00113/00	Nut	
6	B12440101	Suspension Spring	
7	204/00016/00	Nut	
8	224/00046/00	Bolt	

info@zipnasklade.ru
8(800)500-69-51

© Copyright, Alliance Laundry Systems LLC – DO NOT COPY or TRANSMIT

Shell and Front Panel - *X165 Design 6 Models

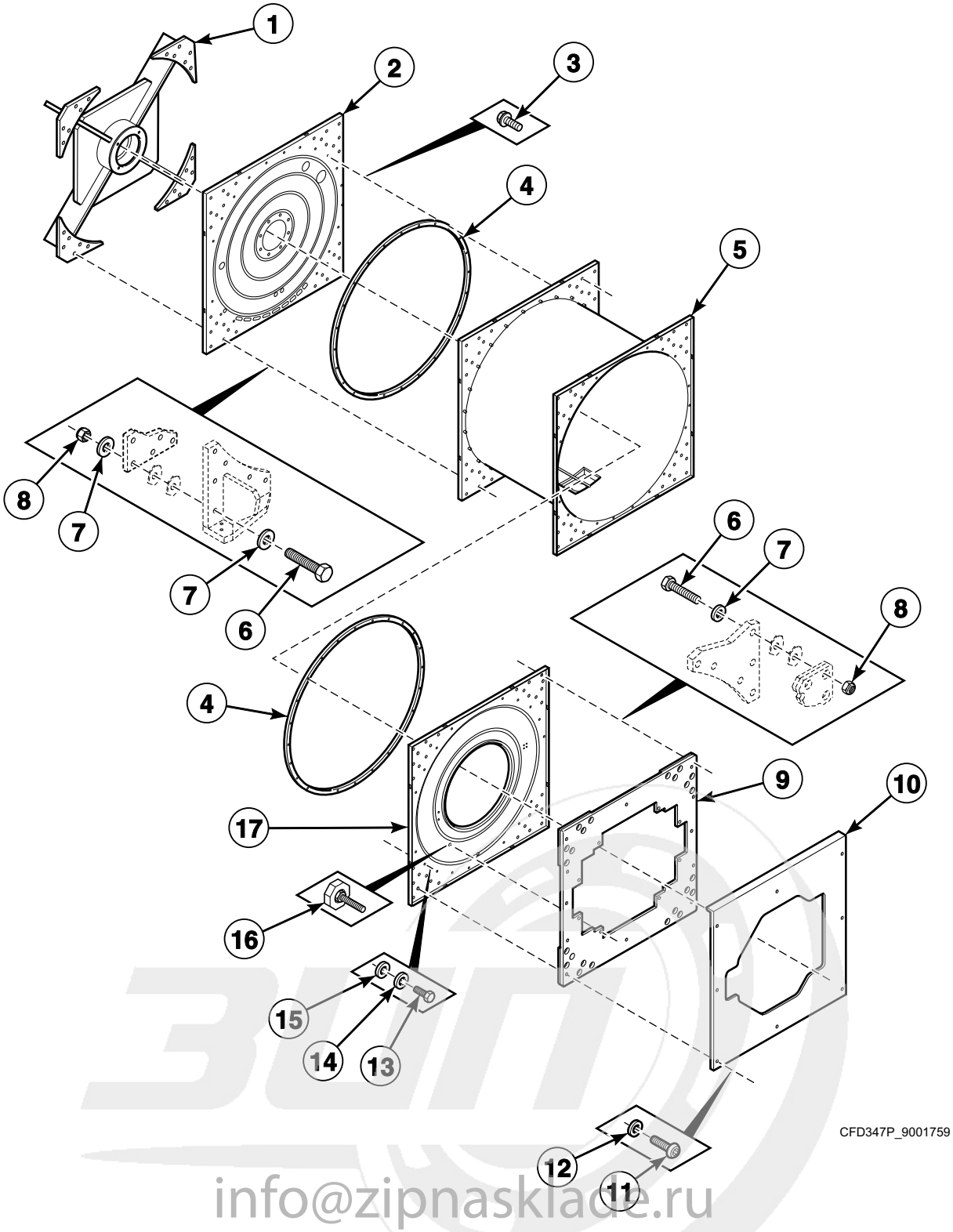

info@zipnasklade.ru
8(800)500-69-51

© Copyright, Alliance Laundry Systems LLC – DO NOT COPY or TRANSMIT

Shell and Front Panel - *X165 Design 6 Models

REF	PART NO.	DESCRIPTION	COMMENTS
1	253/10505/00	Bearing Housing	
2	173/00020/10	Tub Back Plate	Standard and steam heat
	173/00019/10	Tub Back Plate	Electric and steam heat
3	206/00099/00	Bolt	
4	255/00001/00	Tub Gasket	
5	173/00020/00	Tub	Standard and steam heat
	173/00019/00	Tub	Electric and steam heat
6	206/00122/00	Bolt	
7	201/00001/00	Washer	
8	204/00113/00	Nut	
9	253/10504/00	Counterweight	
10	173/00025/00	Front Panel	
11	205/00102/00	Bolt	
12	202/00105/00	Washer	
13	205/00105/00	Bolt	
14	B12300701	Washer	
15	B12300601	Washer	
16	252/00006/00	Leveling Leg	
17	173/00025/00	Front Panel	

info@zipnasklade.ru
8(800)500-69-51

© Copyright, Alliance Laundry Systems LLC – DO NOT COPY or TRANSMIT

Shell and Front Panel - All Models Except *X165 Design 6 Models

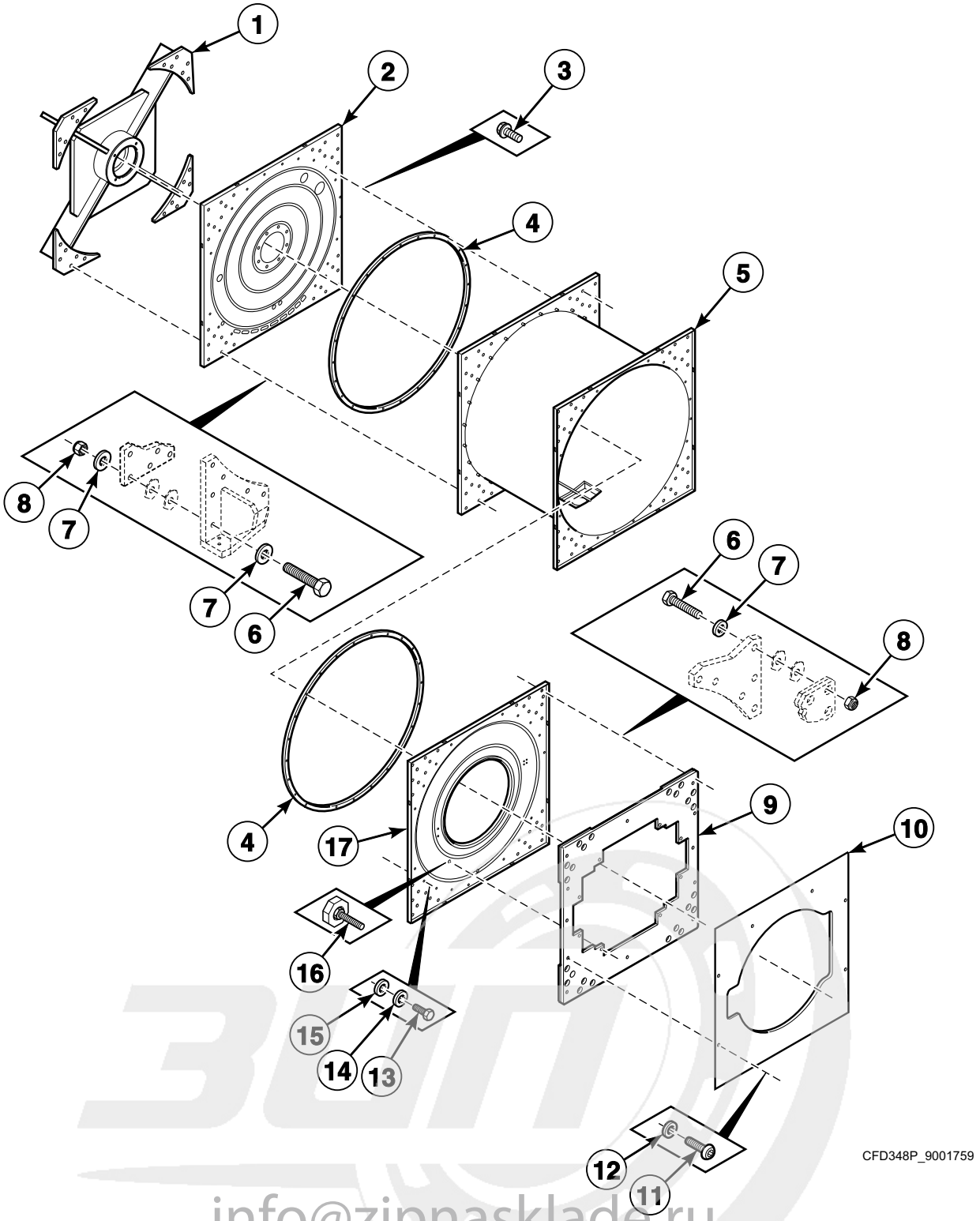

info@zipnasklade.ru
8(800)500-69-51

© Copyright, Alliance Laundry Systems LLC – DO NOT COPY or TRANSMIT

Shell and Front Panel - All Models Except *X165 Design 6 Models

REF	PART NO.	DESCRIPTION	COMMENTS
1	253/10505/00	Bearing Housing	
2	173/00020/10	Tub Back Plate	Standard and steam heat
	173/00019/10	Tub Back Plate	Electric and steam heat
3	206/00099/00	Bolt	
4	255/00001/00	Tub Gasket	
5	190/00020/00	Tub	*HF900 and *X200 models; Standard and steam heat
	173/00020/00	Tub	All other models; Standard and steam heat
	190/00019/00	Tub	*HF900 and *X200 models; Electric and steam heat
	173/00019/00	Tub	All other models; Electric and steam heat
6	206/00122/00	Bolt	
7	201/00001/00	Washer	
8	204/00113/00	Nut	
9	253/10504/00	Counterweight	
10	173/00010/00	Tub Front	
11	205/00102/00	Bolt	
12	202/00105/00	Washer	
13	205/00105/00	Bolt	
14	B12300701	Washer	
15	B12300601	Washer	
16	252/00006/00	Leveling Leg	
17	173/00022/00	Tub Front	

info@zipnasklade.ru
8(800)500-69-51

© Copyright, Alliance Laundry Systems LLC – DO NOT COPY or TRANSMIT

Bearing Assembly (Drawing 1 of 3) - Models Through 1/30/2011

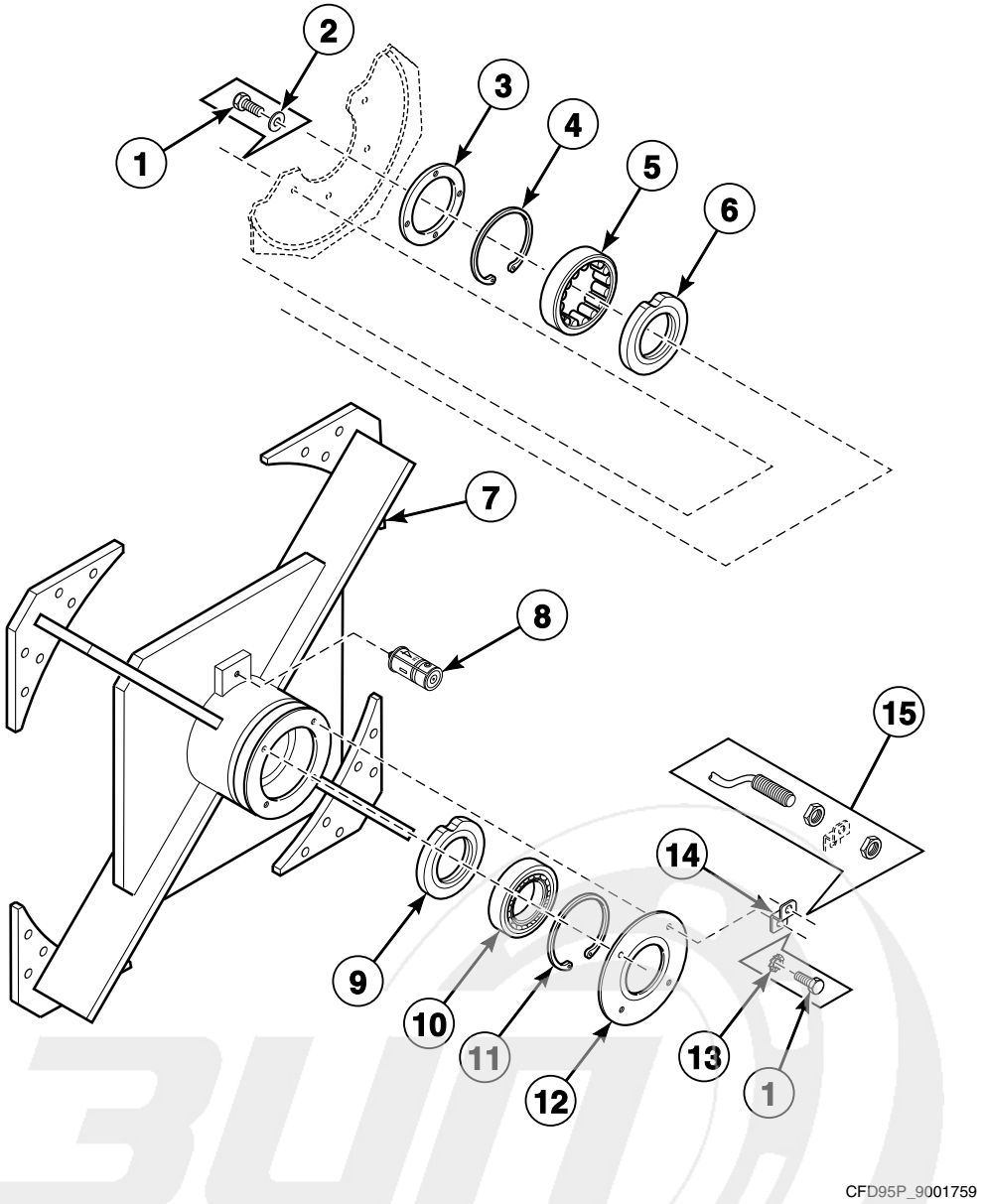

info@zipnasklade.ru
8(800)500-69-51

© Copyright, Alliance Laundry Systems LLC – DO NOT COPY or TRANSMIT

Bearing Assembly (Drawing 1 of 3) - Models Through 1/30/2011

REF	PART NO.	DESCRIPTION	COMMENTS
	245/00059/00	Bearing Tool Kit	
	895P3	Bearing Replacement Kit	Includes items 5, 8 and 10 and 253/00151/00 V-Ring Seal (VL220), 253/00153/00 V-Ring Seal (VL170), 253/10516/00 V-Ring Seal (VL250), 253/10515/00 V-Ring Seal (VA110) and 253/10506/00 Bearing Sleeve
1	205/00102/00	Bolt	
2	201/00204/00	Washer	
3	253/10523/00	Bearing Retainer	
4	212/00043/00	Retaining Ring	
5	253/00164/00	Bearing	
6	B12360809	Bearing Spacer	
7	253/10505/00	Bearing Housing	
	253/10522/00	Bearing Housing	Includes items 4-6 and 9-11
8	212/00022/00	Lubricator	
9	253/10513/00	Bearing Spacer	
10	253/00165/00	Bearing	
11	253/00157/00	Retaining Ring	
12	253/10507/00	Bearing Retainer	
13	203/00002/00	Washer	
14	153/00041/02	Speed Sensor Bracket	*X165 models; Models through 10/29/2006
	153/00041/11	Speed Sensor Bracket	*X165 models; Models starting 10/30/2006
	153/10028/00	Speed Sensor Bracket	All other models
15	209/00400/00	Speed Detector	

info@zipnasklade.ru
8(800)500-69-51

© Copyright, Alliance Laundry Systems LLC – DO NOT COPY or TRANSMIT

Bearing Assembly (Drawing 2 of 3) - Models Through 1/30/2011

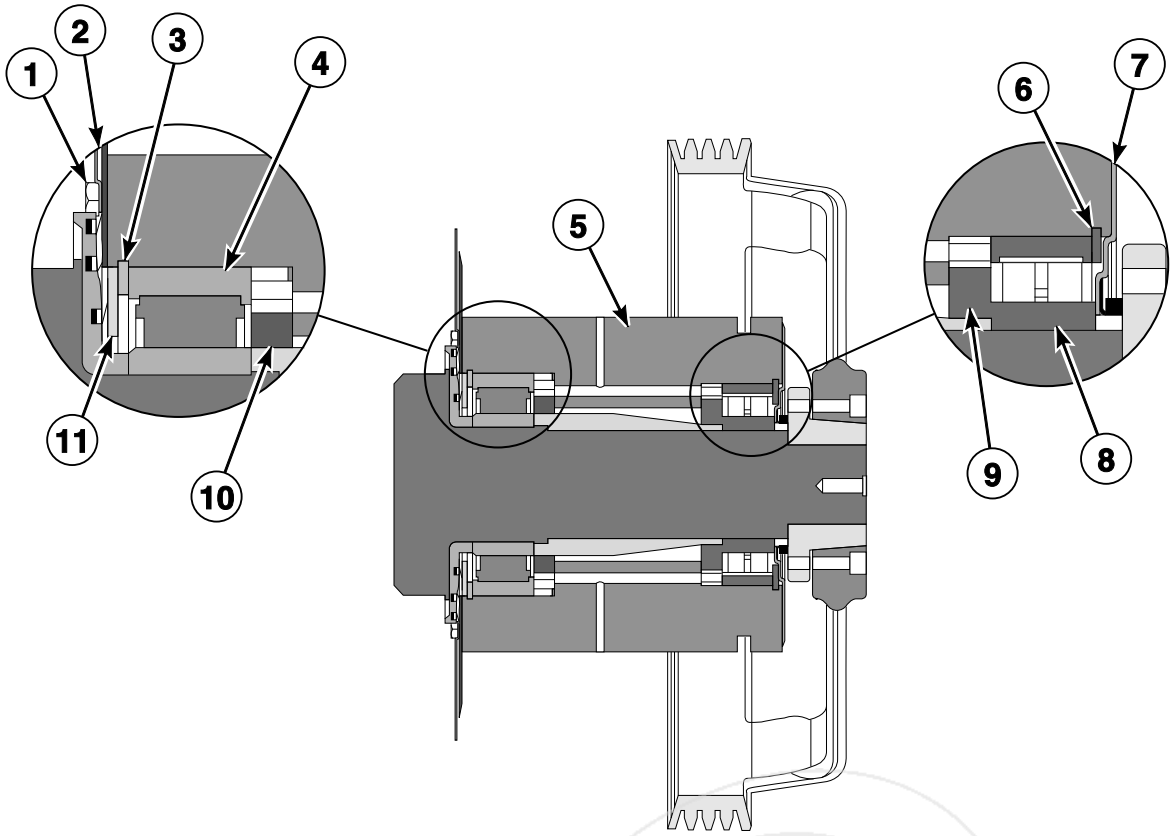

CFD135P_9001759

info@zipnasklade.ru
8(800)500-69-51

© Copyright, Alliance Laundry Systems LLC – DO NOT COPY or TRANSMIT

Bearing Assembly (Drawing 2 of 3) - Models Through 1/30/2011

REF	PART NO.	DESCRIPTION	COMMENTS
1	205/00102/00	Bolt	
2	201/00202/00	Washer	
3	212/00043/00	Retaining Ring	
4	253/00164/00	Bearing	
5	253/10505/00	Bearing Housing	
6	253/00157/00	Retaining Ring	
7	253/10507/00	Bearing Retainer	
8	253/00165/00	Bearing	
9	253/10513/00	Bearing Spacer	
10	B12360809	Bearing Spacer	
11	253/10523/00	Bearing Retainer	

info@zipnasklade.ru
8(800)500-69-51

© Copyright, Alliance Laundry Systems LLC – DO NOT COPY or TRANSMIT

Bearing Assembly (Drawing 3 of 3) - Models Through 1/30/2011

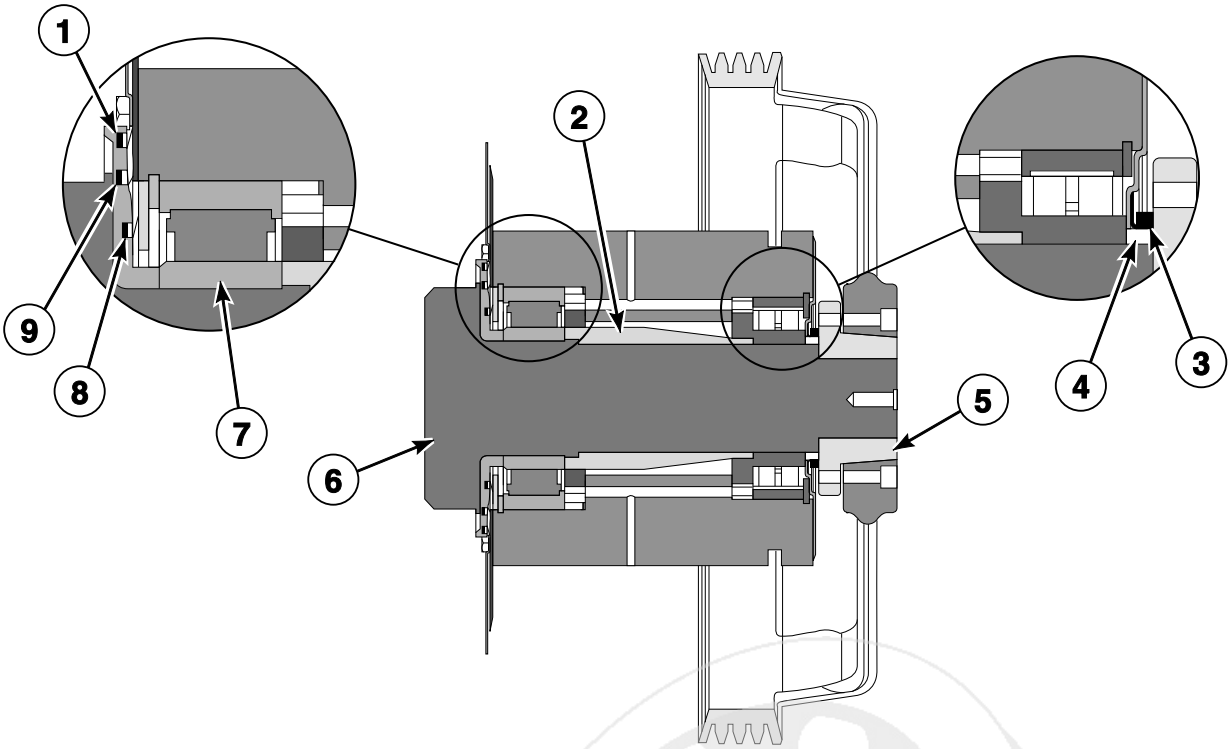

CFD135PA_9001759

info@zipnasklade.ru
8(800)500-69-51

© Copyright, Alliance Laundry Systems LLC – DO NOT COPY or TRANSMIT

Bearing Assembly (Drawing 3 of 3) - Models Through 1/30/2011

REF	PART NO.	DESCRIPTION	COMMENTS
1	253/10516/00	V-Ring Seal	Loctite 480 required for installation
2	253/10506/00	Bearing Sleeve	
3	253/10515/00	V-Ring Seal	Loctite 480 required for installation
4	253/10518/00	V-Ring Seal Ring	
5	253/10517/00	Pulley and Hub Assembly	
6	B12402701	Cylinder and Shaft Assembly	
7	253/00164/00	Bearing	
8	253/00153/00	V-Ring Seal	Loctite 480 required for installation
9	253/00151/00	V-Ring Seal	Loctite 480 required for installation

info@zipnasklade.ru
8(800)500-69-51

© Copyright, Alliance Laundry Systems LLC – DO NOT COPY or TRANSMIT

Bearing Assembly - Models Starting 1/31/2011

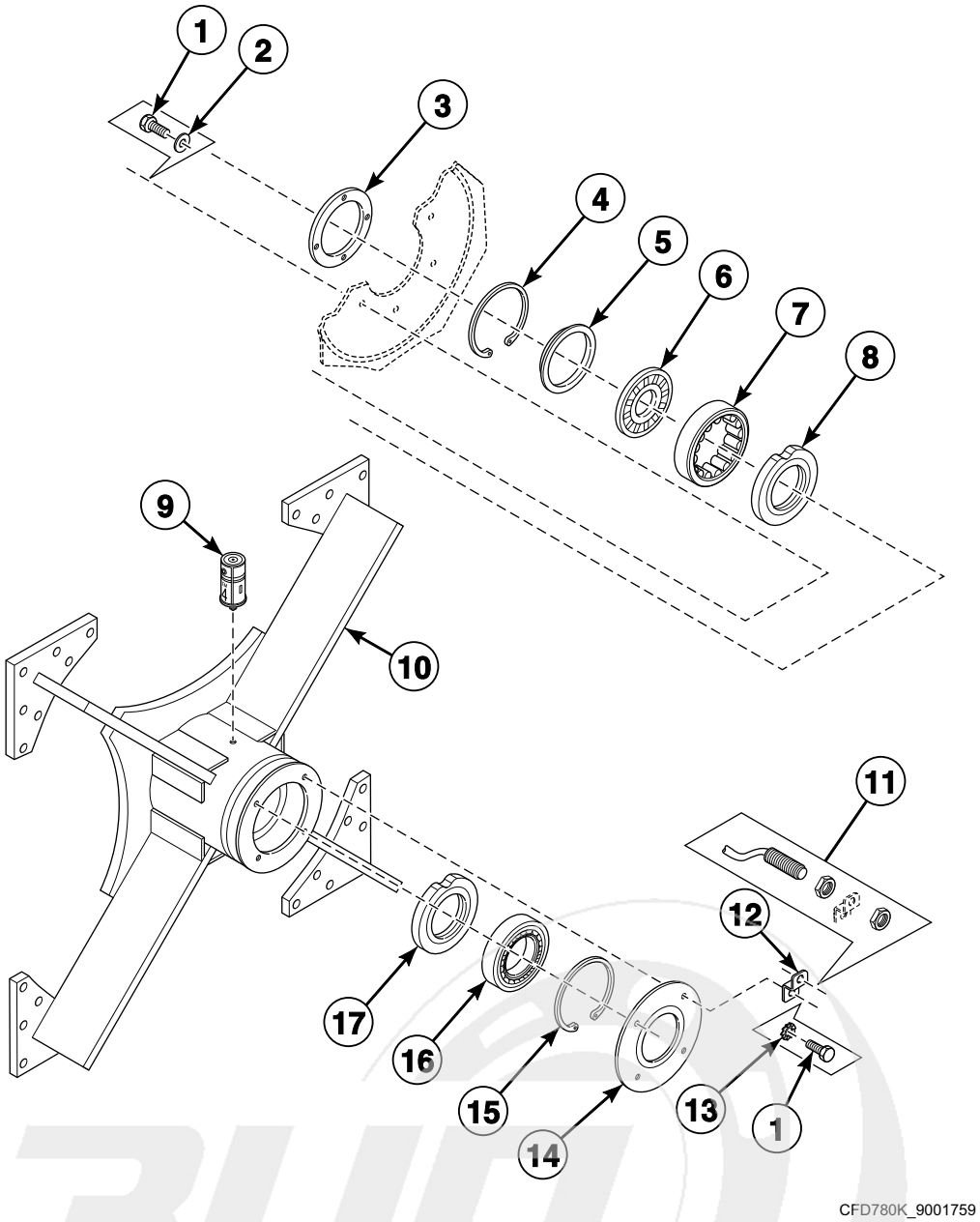

info@zipnasklade.ru
8(800)500-69-51

© Copyright, Alliance Laundry Systems LLC – DO NOT COPY or TRANSMIT

Bearing Assembly - Models Starting 1/31/2011

REF	PART NO.	DESCRIPTION	COMMENTS
	245/00059/00	Bearing Tool Kit	
	3886P	Bearing Kit	Includes items 3, 5-7, 9, 16, 253/10506/00 Bearing Sleeve, 253/10515/00 V-Ring Seal, B12379001 Seal, B12379101 Seal and 204/00113/00 Nut
1	205/00102/00	Bolt	
2	201/00204/00	Washer	
3	B12418301	Seal Wear Plate	
4	212/00043/00	Retaining Ring	
5	B12418101	Grease Ring Holder	
6	B12379301	Lip Seal	
7	253/00164/00	Bearing	
8	B12360809	Bearing Spacer	
9	212/00022/00	Lubricator	
10	253/10505/00	Bearing Housing	
	253/10522/00	Bearing Housing	Includes items 4, 7, 8 and 15-17
11	209/00400/00	Speed Detector	
12	153/00041/11	Speed Sensor Bracket	*X165 models; Models starting 10/30/2006
	153/10028/00	Speed Sensor Bracket	All other models
13	203/00002/00	Washer	
14	253/10507/00	Bearing Retainer	
15	253/00157/00	Retaining Ring	
16	253/00165/00	Bearing	
17	253/10513/00	Bearing Spacer	

info@zipnasklade.ru
8(800)500-69-51

© Copyright, Alliance Laundry Systems LLC – DO NOT COPY or TRANSMIT

Basket, Pulley and Belt - Models Through 1/30/2011

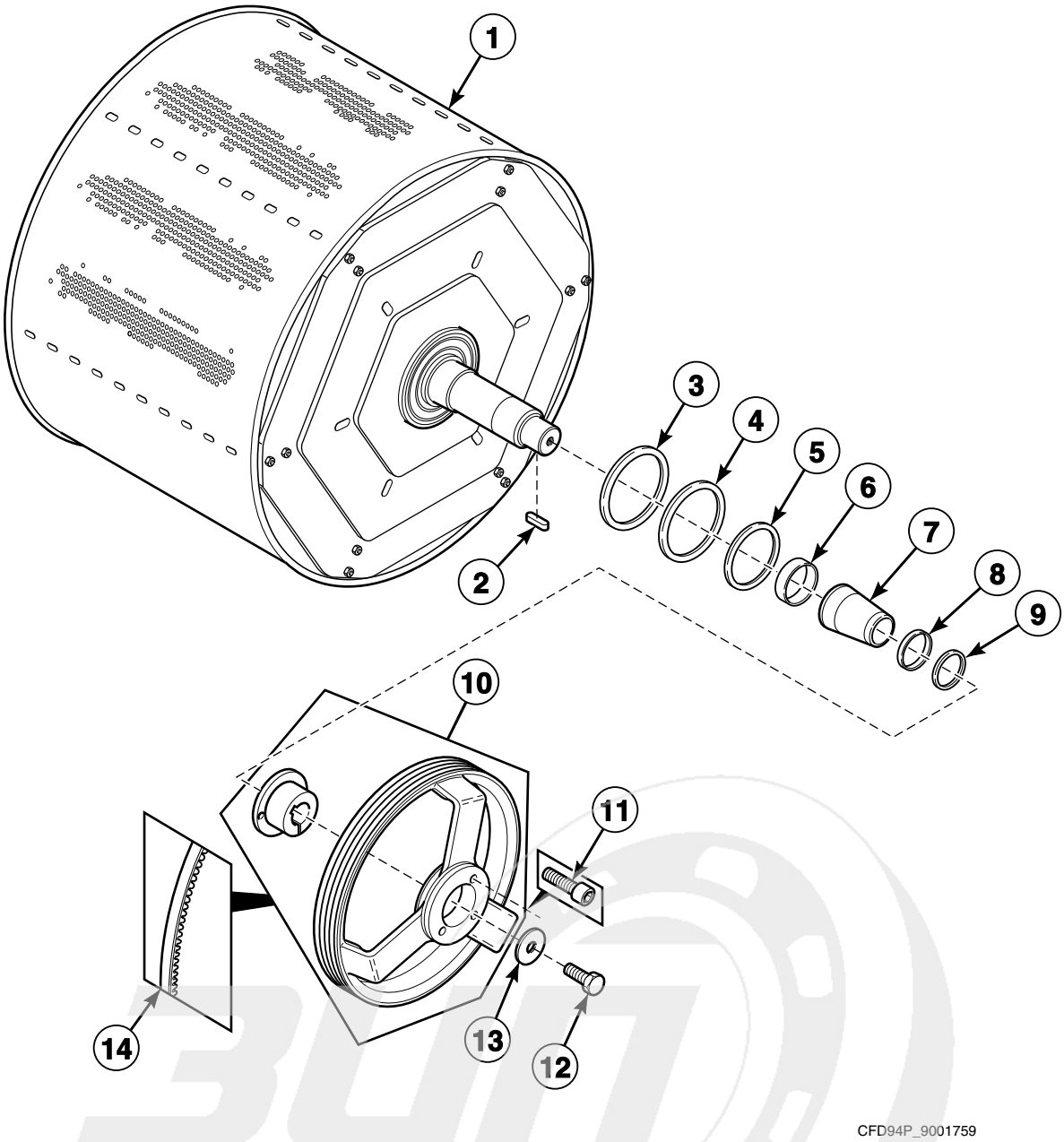

info@zipnasklade.ru
8(800)500-69-51

© Copyright, Alliance Laundry Systems LLC – DO NOT COPY or TRANSMIT

Basket, Pulley and Belt - Models Through 1/30/2011

REF	PART NO.	DESCRIPTION	COMMENTS
1	N/A	Cylinder and Shaft Assembly	*HF900 and *X200 models; No longer available; Order B12464301P Basket Kit
	B12543601	Cylinder and Shaft Assembly	*HF900 and *X200 models; For replacement of basket used before 1/30/11; Includes B12464301 Basket and 3886P Bearing Kit
	N/A	Cylinder and Shaft Assembly	All other models; No longer available; Order B12464201P Basket Kit
	B12543501	Basket Kit	All other models; For replacement of B12402701 Cylinder and Shaft Assembly; Includes B12464201 Basket and 3886P Bearing Kit
2	253/00033/00	Key	
3	253/10516/00	V-Ring Seal	Loctite 480 required for installation
4	253/00151/00	V-Ring Seal	Loctite 480 required for installation
5	253/00153/00	V-Ring Seal	Loctite 480 required for installation
6	253/00164/00	Bearing	
7	253/10506/00	Bearing Sleeve	
8	253/10518/00	V-Ring Seal Ring	
9	253/10515/00	V-Ring Seal	Loctite 480 required for installation
10	253/10517/00	Pulley and Hub Assembly	
11	206/00053/00	Screw	
12	206/00147/00	Bolt	
13	201/00025/00	Washer	
14	253/00163/00	Belt	

info@zipnasklade.ru
8(800)500-69-51

© Copyright, Alliance Laundry Systems LLC – DO NOT COPY or TRANSMIT

Basket, Pulley and Belt - Models Starting 1/31/2011

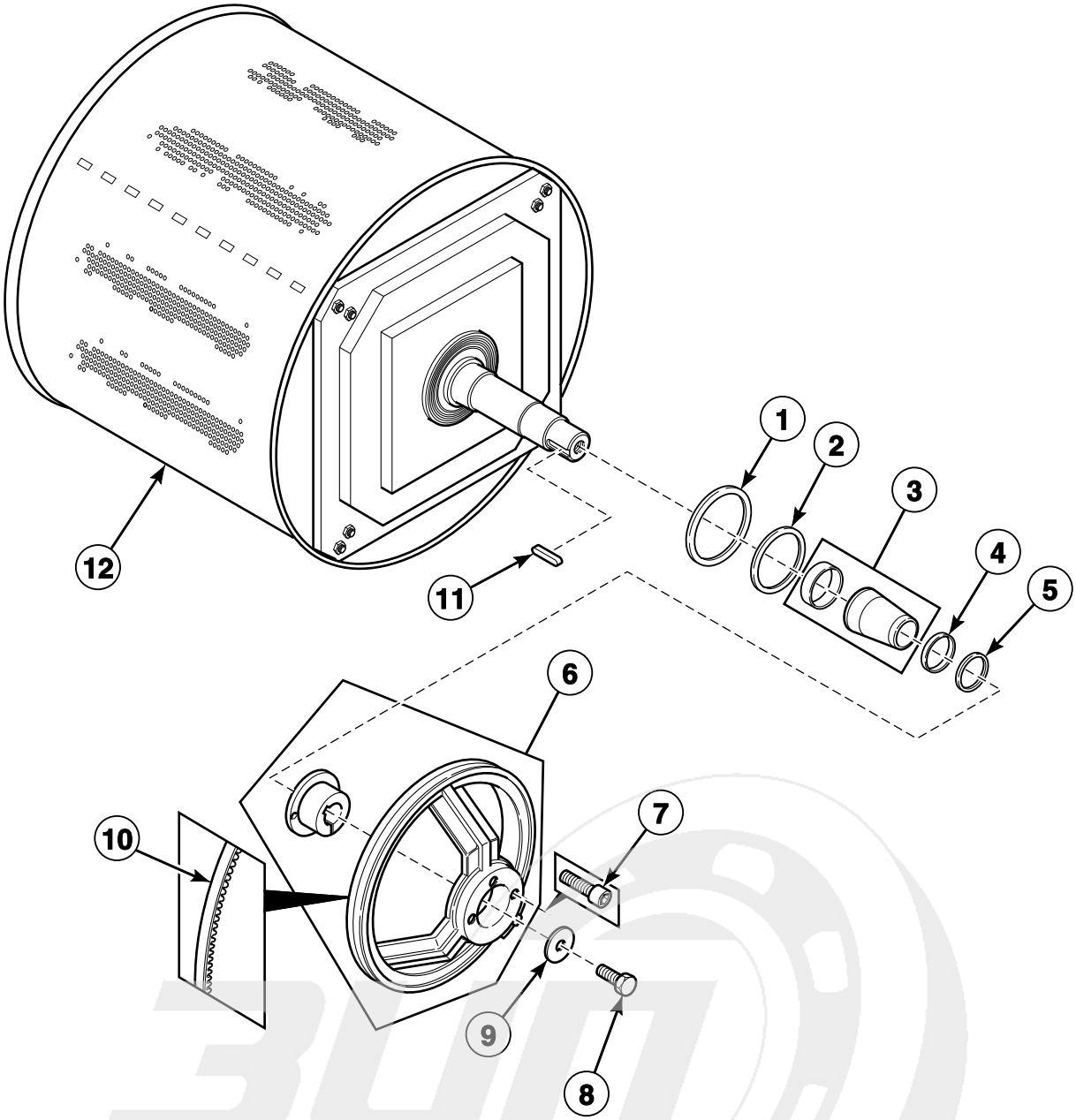

info@zipnasklade.ru
8(800)500-69-51

© Copyright, Alliance Laundry Systems LLC – DO NOT COPY or TRANSMIT

Basket, Pulley and Belt - Models Starting 1/31/2011

REF	PART NO.	DESCRIPTION	COMMENTS
1	B12379101	Seal	VR-L10 EPDM 250
2	B12379001	Seal	VR-L10 EPDM 220
3	253/10506/00	Bearing Sleeve	
4	253/10518/00	V-Ring Seal Ring	
5	253/10515/00	V-Ring Seal	
6	253/10517/00	Pulley and Hub Assembly	
7	206/00053/00	Screw	
8	206/00147/00	Bolt	
9	201/00025/00	Washer	
10	253/00163/00	Belt	
11	253/00033/00	Key	
12	B12464301	Cylinder and Shaft Assembly	*HF900 and *X200 models
	B12464201	Basket	All other models

info@zipnasklade.ru
8(800)500-69-51

© Copyright, Alliance Laundry Systems LLC – DO NOT COPY or TRANSMIT

Motor

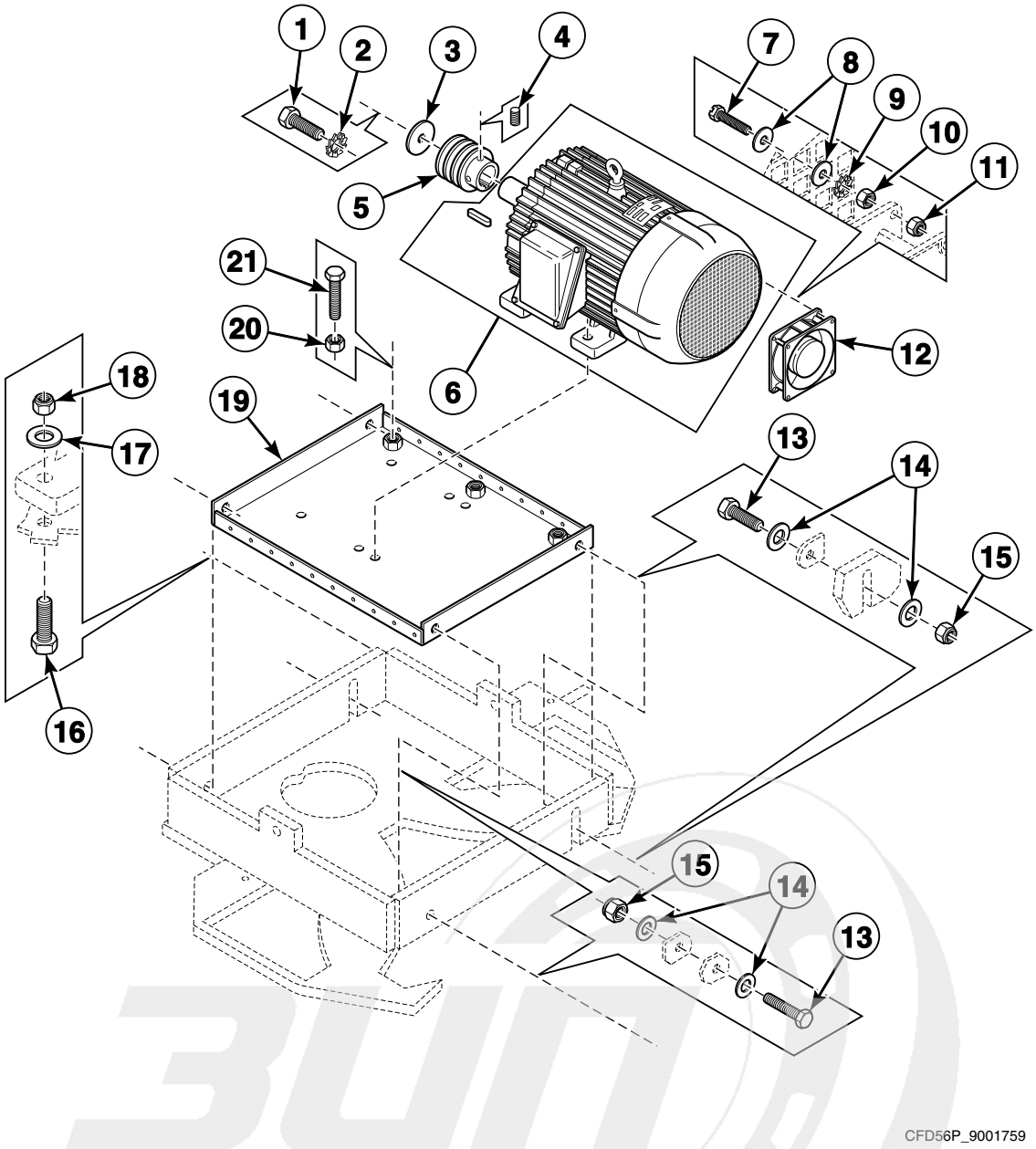

info@zipnasklade.ru
8(800)500-69-51

© Copyright, Alliance Laundry Systems LLC – DO NOT COPY or TRANSMIT

Motor

REF	PART NO.	DESCRIPTION	COMMENTS
1	206/00004/00	Bolt	
2	203/00001/00	Washer	
3	201/00011/00	Washer	
4	206/00031/00	Screw	
5	253/10519/00	Motor Pulley	
6	227/00246/00	Motor	15 kW; *HF900 and *X200 models made before Serial No. 0902900007; Used when replacing 11 kW motor with 15 kW motor; When replacing either the 11 kW motor or inverter drive with a 15 kW motor or inverter drive, both the 11 kW motor and inverter drive must be replaced with a 15 kW motor and inverter drive
	B12511301	Motor	15 kW; *HF900 and *X200 models starting Serial No. 0902900007
	227/00174/00	Motor	11 kW; For *HF900 and *X200 models made before Serial No. 0902900007, contact customer service for replacement information
	B12511001	Motor	*HF730 and *X165 models
7	207/00003/00	Screw	
8	201/00008/00	Washer	
9	203/00006/00	Washer	
10	204/00007/00	Nut	
11	204/00114/00	Nut	
12	209/00287/00	Cooling Fan	
13	248/00114/00	Bolt	
14	201/00001/00	Washer	
15	204/00113/00	Nut	
16	206/00003/00	Bolt	
17	201/00004/00	Washer	
18	204/00111/00	Nut	
19	153/00025/00	Motor Plate	
20	204/00012/00	Nut	
21	206/00125/00	Screw	

info@zipnasklade.ru
8(800)500-69-51

© Copyright, Alliance Laundry Systems LLC – DO NOT COPY or TRANSMIT

Drain Assembly

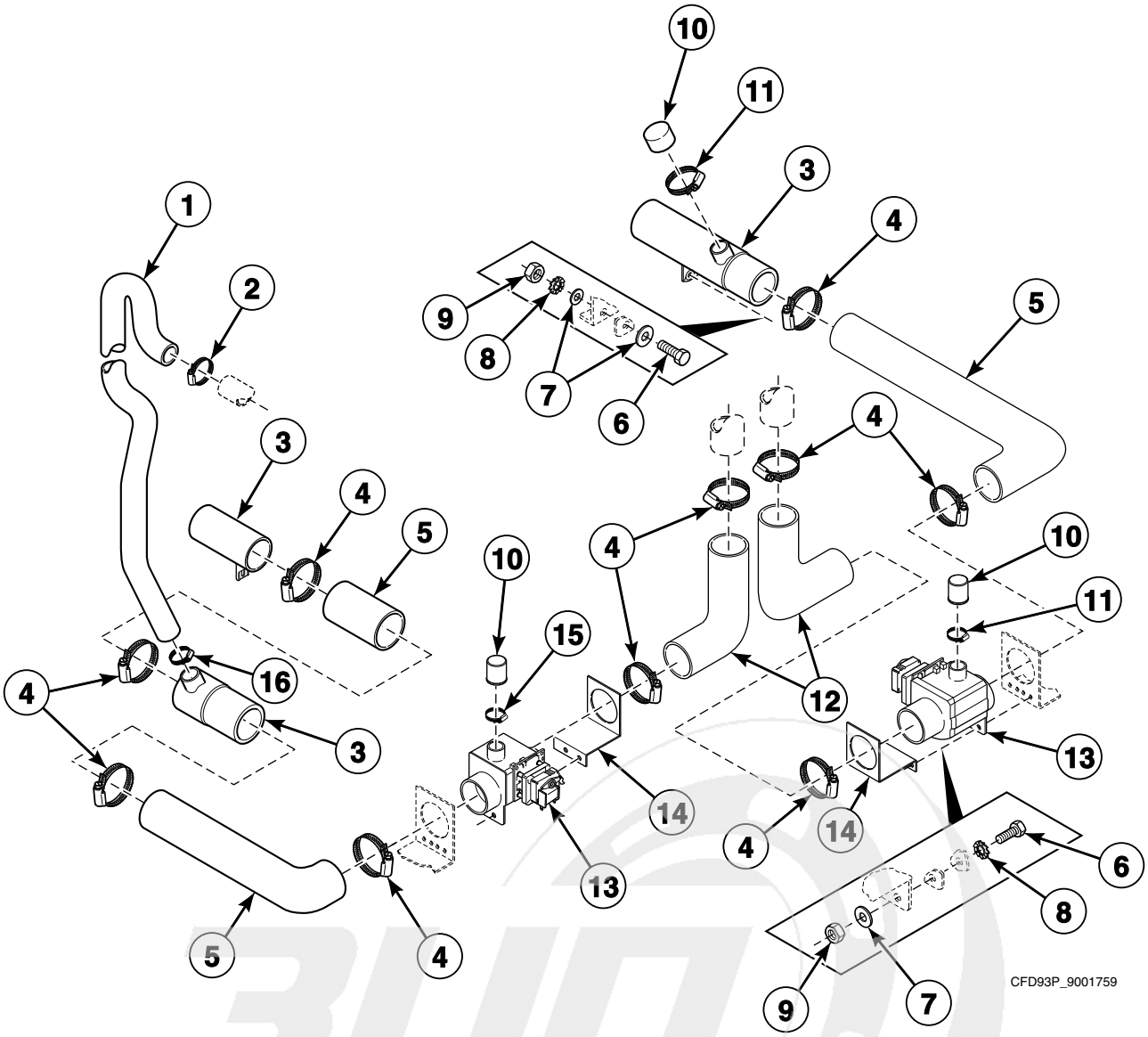

info@zipnasklade.ru
8(800)500-69-51

© Copyright, Alliance Laundry Systems LLC – DO NOT COPY or TRANSMIT

Drain Assembly

REF	PART NO.	DESCRIPTION	COMMENTS
	210/01575/18	Drain Valve Harness	
	210/01575/17	Wire Harness	Connects drain 1 to drain 2
1	223/00184/00	Overflow Hose	
2	223/00013/00	Hose Clamp	
3	223/00106/00	Drain Pipe	
4	223/00071/00	Hose Clamp	
5	223/00141/00	Drain Valve to Drain Pipe Hose	
6	206/00009/00	Bolt	
7	202/00002/00	Washer	
8	203/00003/00	Washer	
9	204/00004/00	Nut	
10	223/00086/00	Drain Valve Overflow Plug	
11	223/00012/00	Hose Clamp	
12	223/00133/00	Drain Tub to Drain Valve Hose	
13	209/00075/00	Drain Valve	
14	114/00010/00	Drain Valve Plate Assembly	
15	223/00223/00	Hose Clamp	
16	223/00013/00	Hose Clamp	

info@zipnasklade.ru
8(800)500-69-51

© Copyright, Alliance Laundry Systems LLC – DO NOT COPY or TRANSMIT

Drain Valve - Normally Open

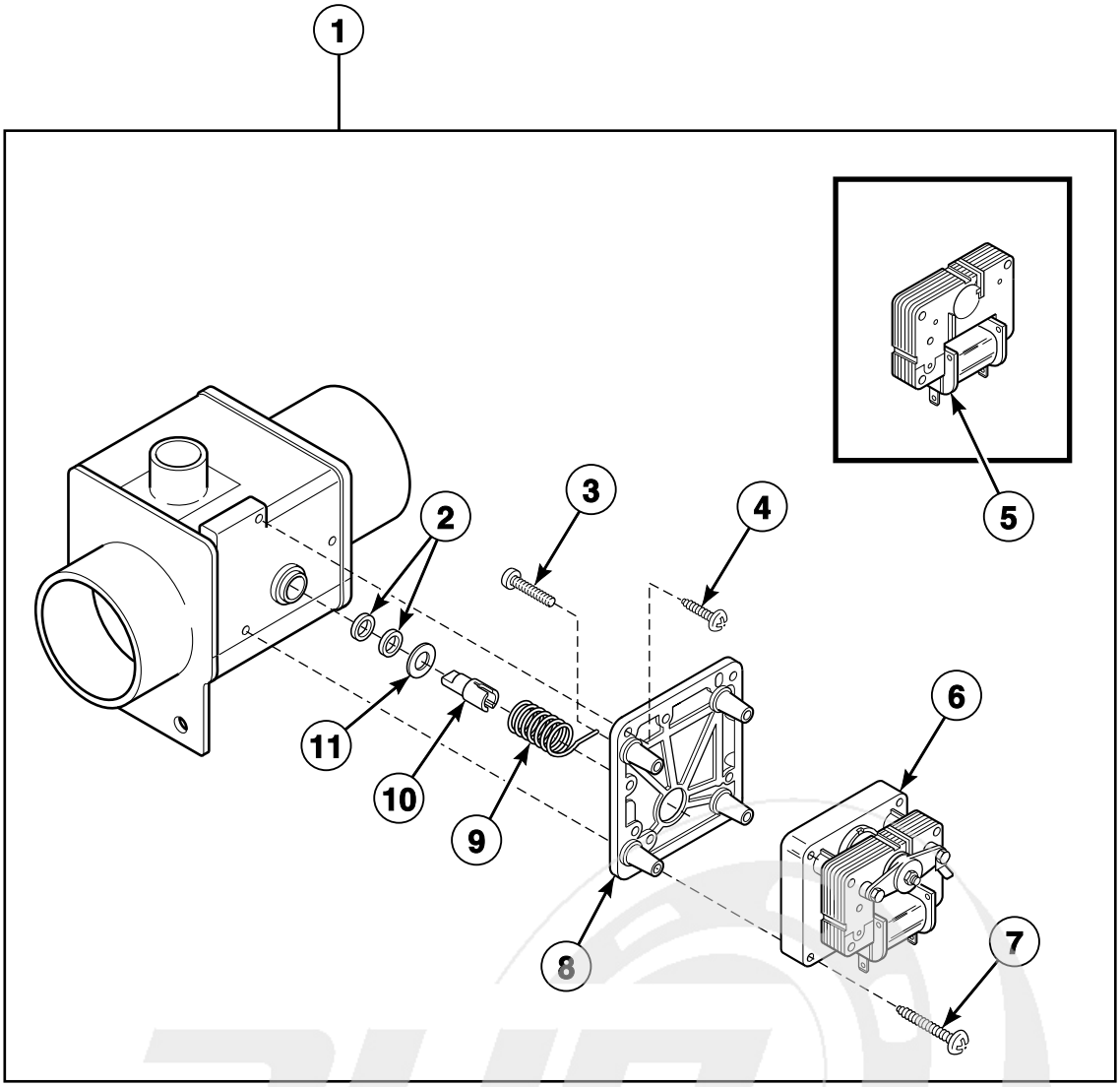

CFD98P_9001759

info@zipnasklade.ru
8(800)500-69-51

© Copyright, Alliance Laundry Systems LLC – DO NOT COPY or TRANSMIT

Drain Valve - Normally Open

REF	PART NO.	DESCRIPTION	COMMENTS
	210/01575/18	Drain Valve Harness	
	210/01575/17	Wire Harness	Connects drain 1 to drain 2
1	209/00075/00	Drain Valve	
2	209/00025/10	Drain Valve Shaft Seal	
3	209/00025/08	Screw	
4	209/00170/05	Screw	
5	209/00203/21	Coil	24 Volt
	209/00052/21	Coil	115 Volt
	209/00051/21	Coil	220 Volt
6	209/00203/11	Drain Valve Motor	24 Volt
	209/00052/11	Drain Valve Motor	110 Volt
	209/00051/11	Drain Valve Motor	220 Volt
7	209/00170/07	Screw	
8	209/00025/07	Drain Valve Motor Mounting Plate	
9	209/00025/13	Drain Valve Spring	
10	209/00170/10	Drain Valve Shaft	
11	209/00025/12	Washer	

info@zipnasklade.ru
8(800)500-69-51

© Copyright, Alliance Laundry Systems LLC – DO NOT COPY or TRANSMIT

Drain Valve - Normally Closed

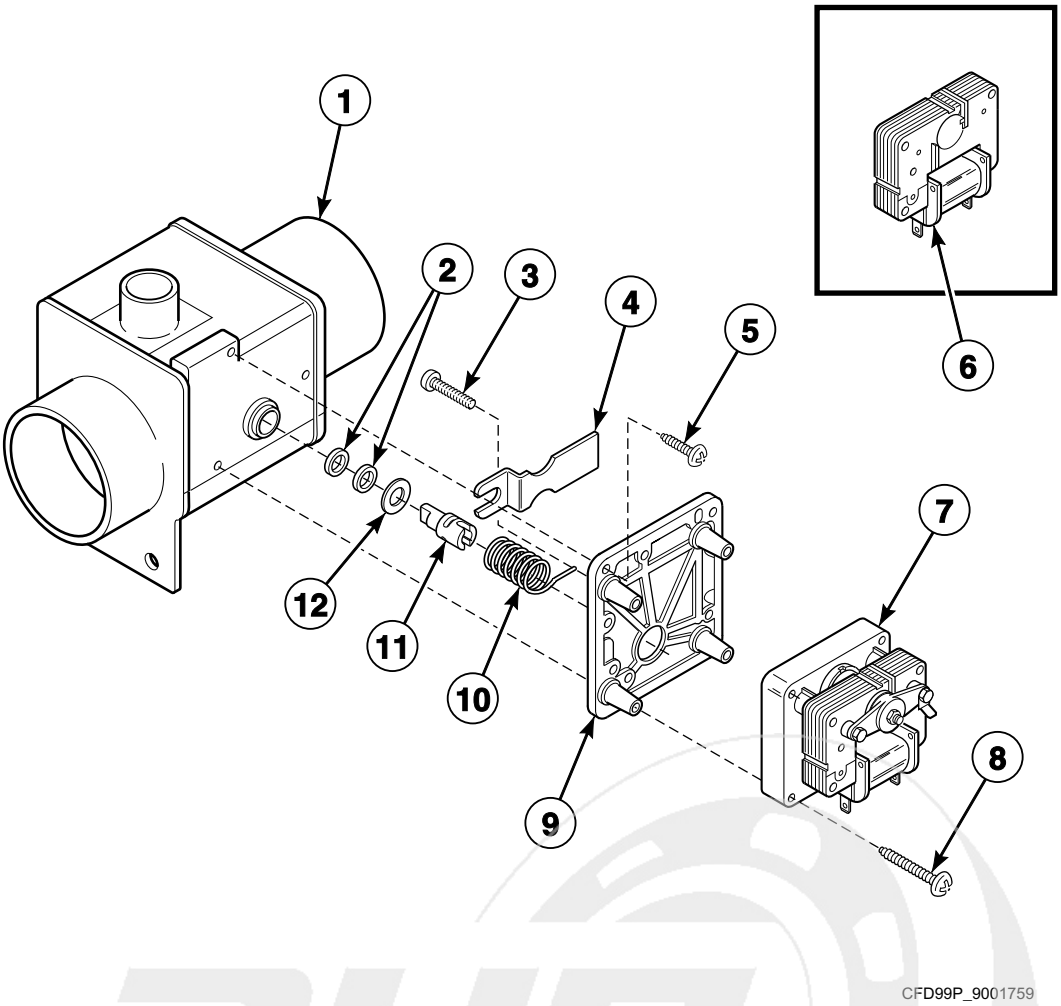

info@zipnasklade.ru
8(800)500-69-51

© Copyright, Alliance Laundry Systems LLC – DO NOT COPY or TRANSMIT

Drain Valve - Normally Closed

REF	PART NO.	DESCRIPTION	COMMENTS
1	209/00075/05	Drain Valve	
2	209/00025/10	Drain Valve Shaft Seal	
3	209/00025/08	Screw	
4	209/00115/11	Drain Valve Handle	
5	209/00170/05	Screw	
6	209/00212/11	Coil	24 Volt
	209/00052/21	Coil	115 Volt
	209/00051/21	Coil	220 Volt
7	209/00203/12	Drain Valve Motor	24 Volt
	209/00052/12	Drain Valve Motor	110 Volt
	209/00170/06	Drain Valve Motor Assembly	220 Volt
8	209/00170/07	Screw	
9	209/00115/04	Drain Valve Motor Mounting Plate	
10	209/00170/02	Drain Valve Spring	
11	209/00170/10	Drain Valve Shaft	
12	209/00025/12	Washer	

info@zipnasklade.ru
8(800)500-69-51

© Copyright, Alliance Laundry Systems LLC – DO NOT COPY or TRANSMIT

Door Lock

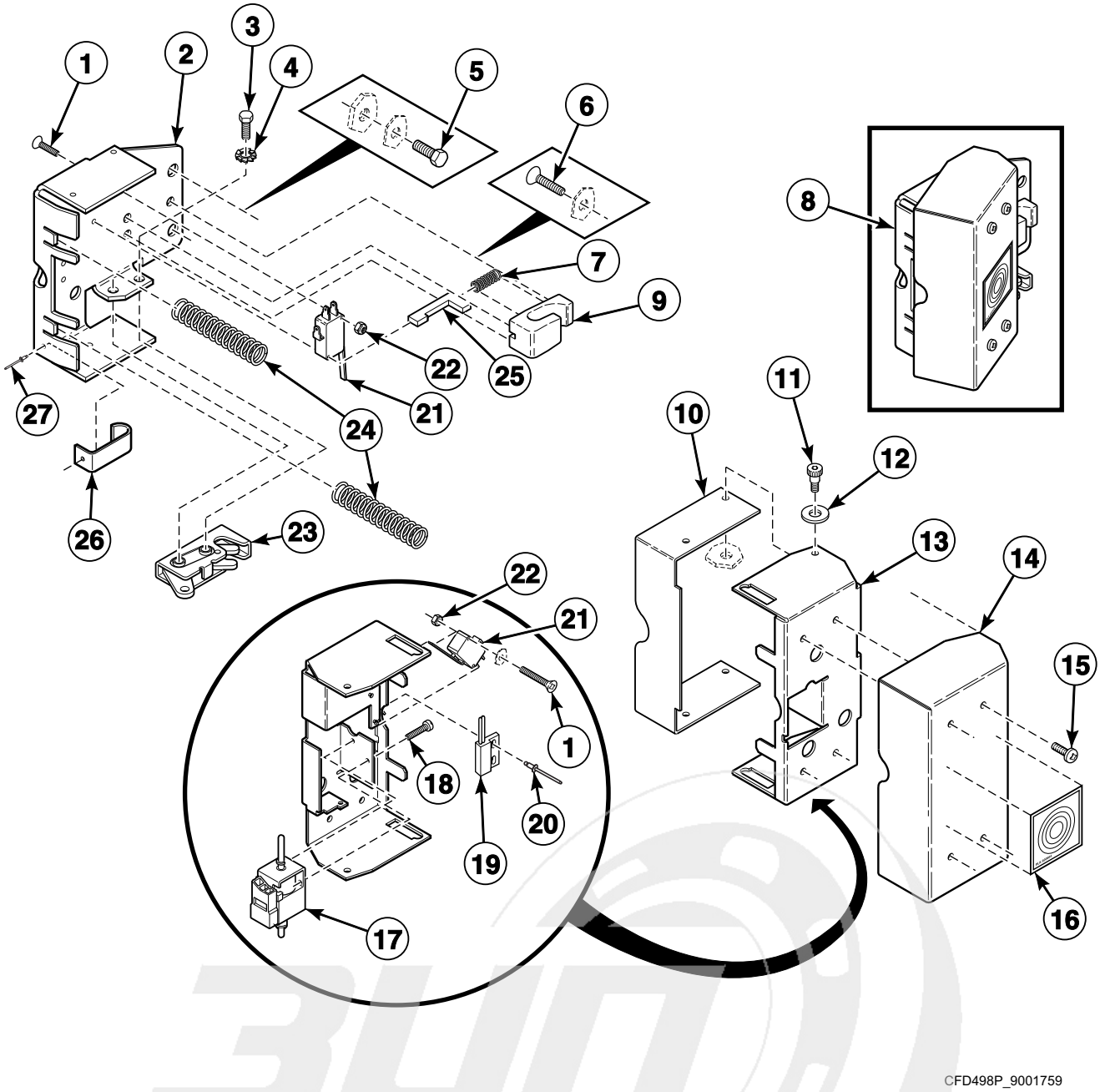

info@zipnasklade.ru
8(800)500-69-51

© Copyright, Alliance Laundry Systems LLC – DO NOT COPY or TRANSMIT

Door Lock

REF	PART NO.	DESCRIPTION	COMMENTS
	C000867	Door Lock Harness	Models starting 7/15/2011
	C001036	Door Lock Assembly	Includes items 1-27 and C000867 Door Lock Harness; Models starting 7/15/2011
	C001036M	Door Lock Kit	Includes C001036 Door Lock Assembly, F8390801 Magnet, C002994 Door Magnet Mounting Bracket and F431223 Pop Rivet; Models through 7/14/2011
1	253/00158/614	Screw	
2	253/00158/684	Door Lock Plate	
3	253/00158/567	Screw	
4	253/00158/571	Washer	
5	205/00123/00	Bolt	
6	253/00158/612	Screw	
7	253/00158/276	Door Lock Spring	
8	253/00159/1036	Door Latch Assembly	
9	253/00158/185	Door Lock Catch	
10	253/00158/687	Door Lock Spring Cover	
11	253/00158/430	Bolt	
12	201/00007/00	Washer	
13	253/00158/686	Door Lock Solenoid Bracket	
14	253/00158/688	Door Lock Cover	
15	253/00158/1047	Screw	
16	253/00158/694	Door Release Decal	
17	209/00274/00	Door Lock Solenoid	
18	B12322501	Screw	
19	C003000	Reed Switch Assembly	Models starting 7/15/2011
20	F8245101	Blind Rivet	Models starting 7/15/2011
21	253/00158/278	Door Lock Microswitch	
22	253/00158/578	Nut	
23	253/00158/1244	Door Latch	
24	253/00158/431	Spring	
25	253/00158/271	Door Lock Switch Actuator	
26	211/00072/00	Lock Spring Leaf	*165 and *730 models starting Serial No. 10090740022; *200 and *900 models starting Serial No. 10090900017
27	B12336401	Rivet	*165 and *730 models starting Serial No. 10090740022; *200 and *900 models starting Serial No. 10090900017

info@zipnasklade.ru
8(800)500-69-51

© Copyright, Alliance Laundry Systems LLC – DO NOT COPY or TRANSMIT

Door - *X165 Design 6 Models

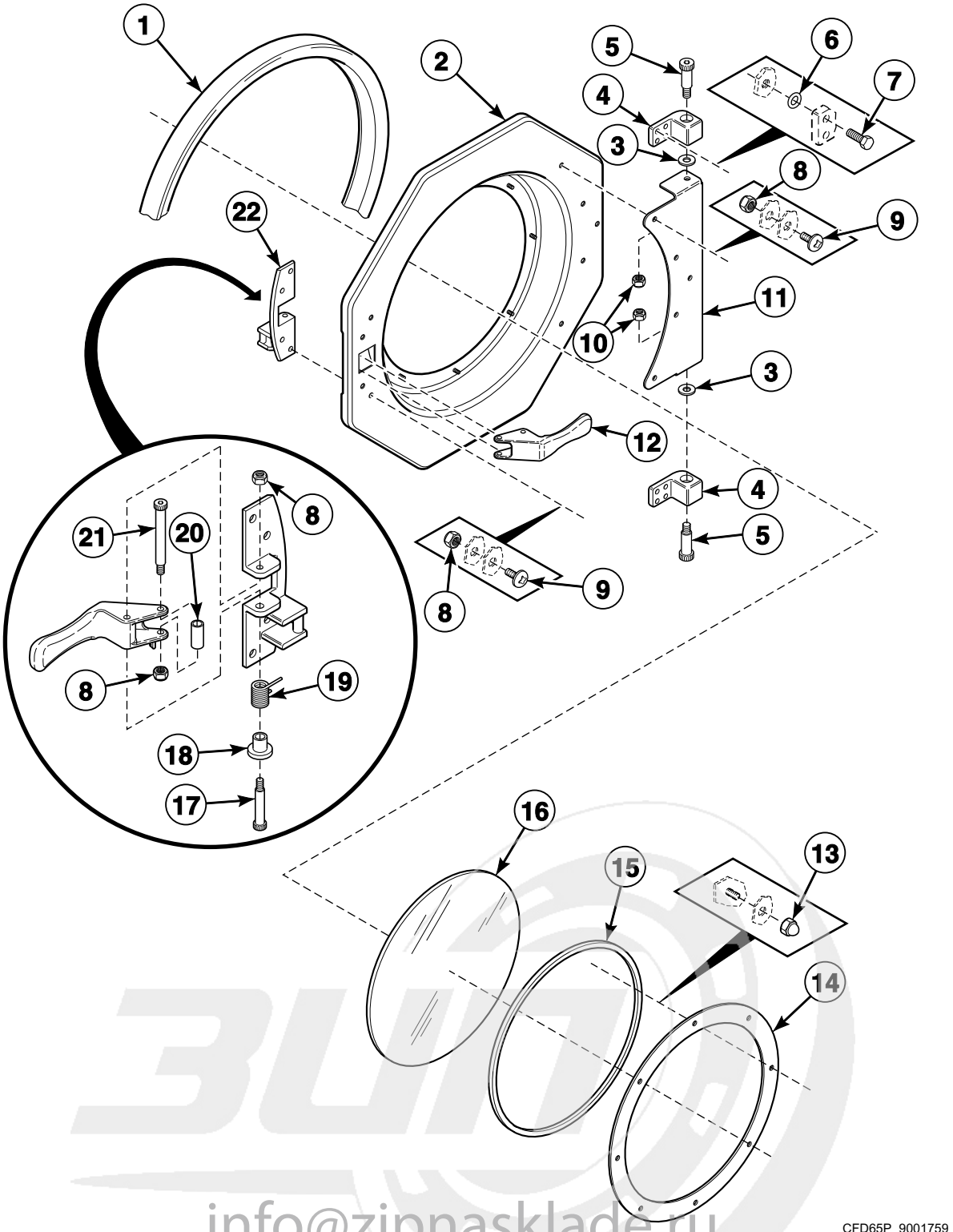

info@zipnasklade.ru
8(800)500-69-51

© Copyright, Alliance Laundry Systems LLC – DO NOT COPY or TRANSMIT

Door - *X165 Design 6 Models

REF	PART NO.	DESCRIPTION	COMMENTS
1	253/00162/02	Door Seal	
2	173/00028/00	Door	
3	253/00158/177	Washer	
4	253/00158/175	Door Hinge Block	
5	253/00158/178	Bolt	
6	223/00244/00	O-Ring	
7	205/00122/00	Bolt	
8	253/00158/560	Nut	
9	253/00158/561	Bolt	
10	253/00158/558	Nut	
11	253/00515/752	Door Hinge	
12	253/00515/28	Door Handle	
13	253/00158/562	Nut	
14	253/00515/751	Door Glass Seal Retaining Ring	
15	253/00515/750	Door Glass Gasket	
16	253/00515/749	Door Glass	
17	253/00158/182	Bolt	
18	253/00158/192	Door Handle Spring Bushing	
19	253/00158/187	Door Handle Torsion Spring	
20	253/00158/181	Door Handle Bushing	
21	253/00158/180	Bolt	
22	253/00158/179	Door Handle Hinge Weldment	

info@zipnasklade.ru
8(800)500-69-51

© Copyright, Alliance Laundry Systems LLC – DO NOT COPY or TRANSMIT

Door - All Models Except *X165 Design 6 Models

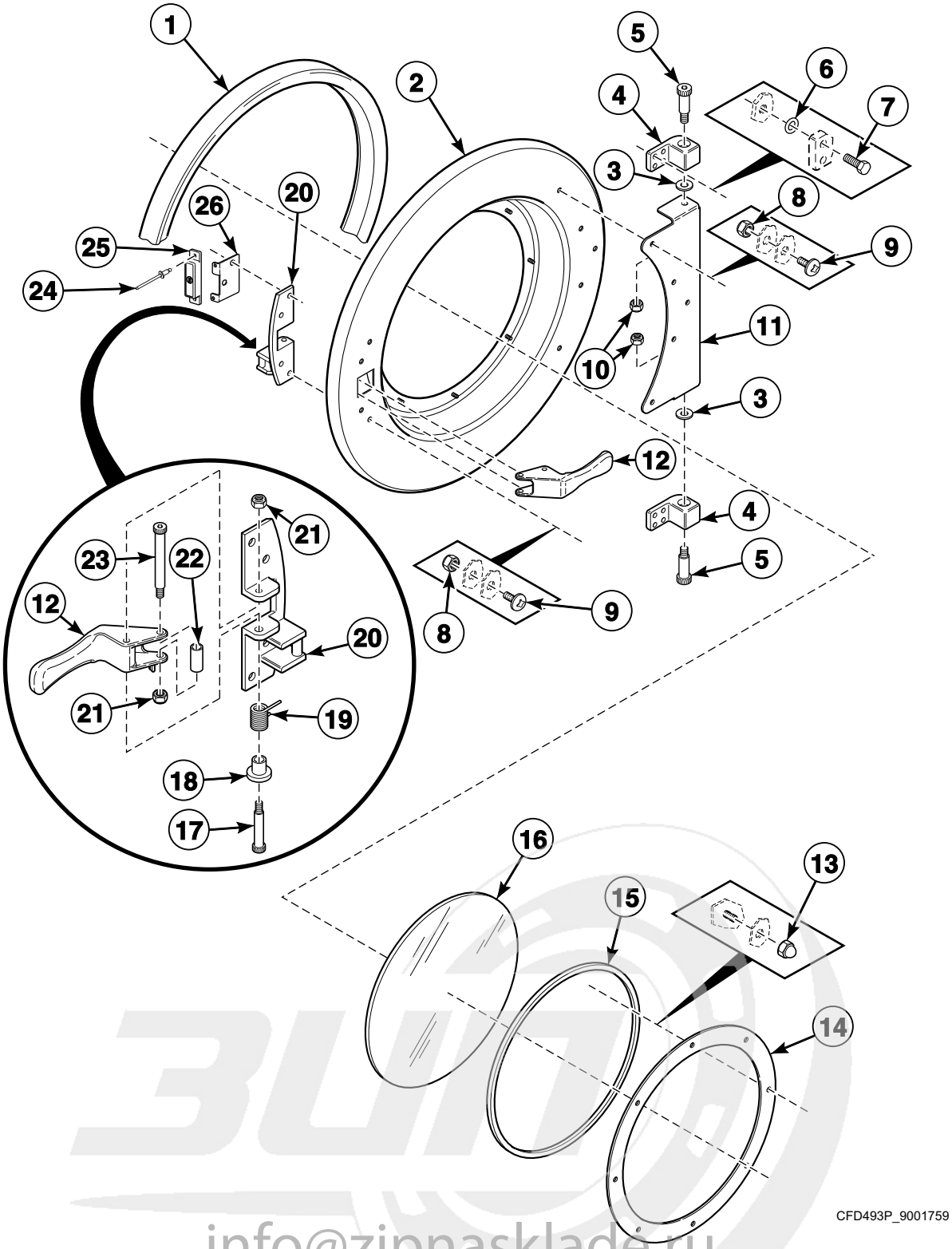

info@zipnasklade.ru
8(800)500-69-51

© Copyright, Alliance Laundry Systems LLC – DO NOT COPY or TRANSMIT

Door - All Models Except *X165 Design 6 Models

REF	PART NO.	DESCRIPTION	COMMENTS
1	253/00162/02	Door Seal	
2	173/00040/00	Door	
3	253/00158/177	Washer	
4	253/00158/175	Door Hinge Block	
5	253/00158/178	Bolt	
6	223/00244/00	O-Ring	
7	205/00122/00	Bolt	
8	204/00127/00	Nut	
9	208/00132/00	Bolt	
10	253/00158/558	Nut	
11	253/00515/752	Door Hinge	
12	253/00515/28	Door Handle	
13	253/00158/562	Nut	
14	173/00041/00	Door Glass Seal Retaining Ring	
15	223/00346/00	Door Glass Seal	
16	253/00515/754	Door Glass	
17	253/00158/182	Bolt	
18	253/00158/192	Door Handle Spring Bushing	
19	253/00158/187	Door Handle Torsion Spring	
20	253/00158/179	Door Handle Hinge Weldment	
21	253/00158/560	Nut	
22	253/00158/181	Door Handle Bushing	
23	253/00158/180	Bolt	
24	F431223	Pop Rivet	Models starting 7/15/2011
25	F8390801	Magnet	Models starting 7/15/2011
26	B12509001	Door Magnet Mounting Bracket	Models starting 7/15/2011

info@zipnasklade.ru
8(800)500-69-51

© Copyright, Alliance Laundry Systems LLC – DO NOT COPY or TRANSMIT

Control Panel - *X Models

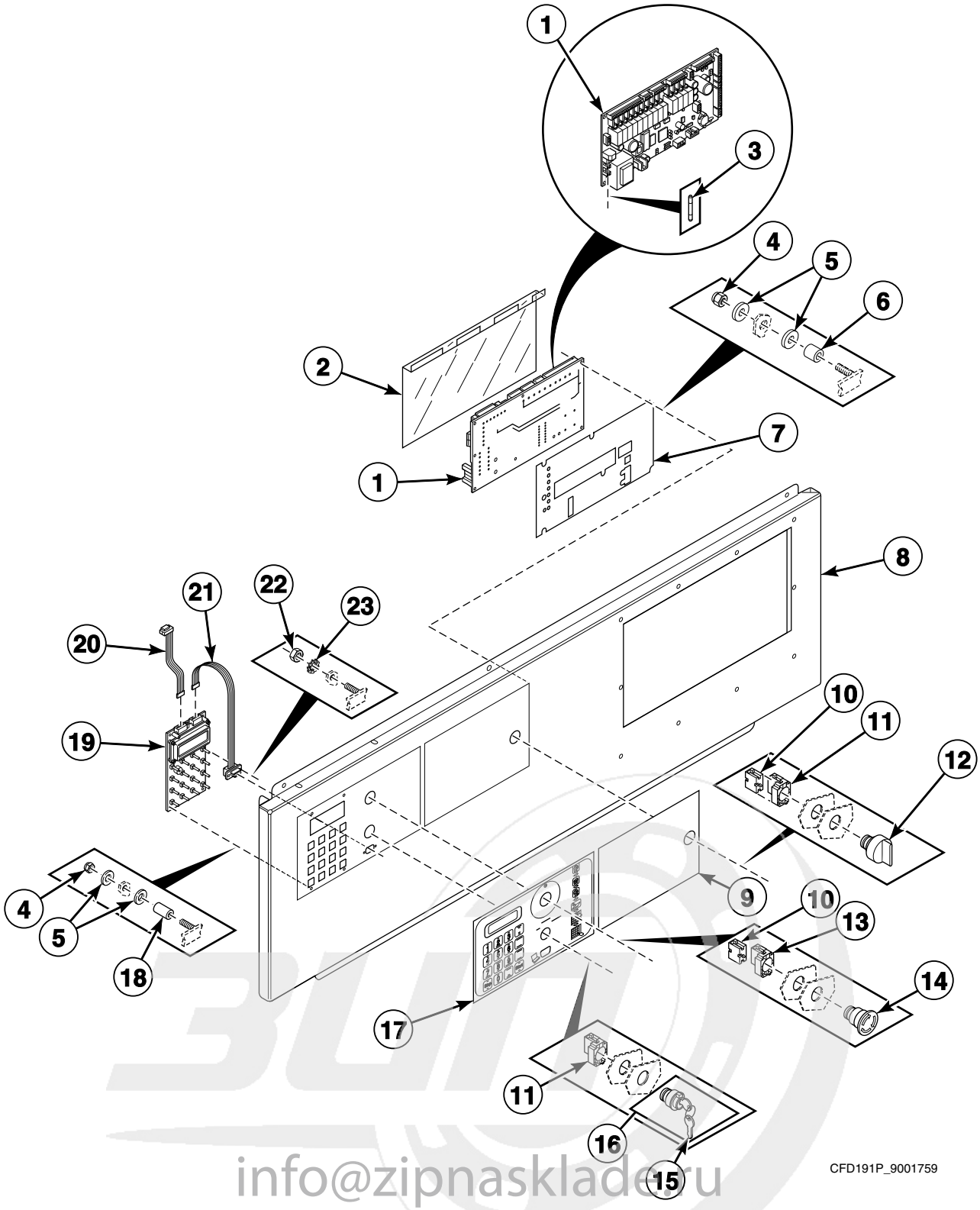

info@zipnasklad.ru
8(800)500-69-51

© Copyright, Alliance Laundry Systems LLC – DO NOT COPY or TRANSMIT

Control Panel - *X Models

REF	PART NO.	DESCRIPTION	COMMENTS
1	9002100	Main Control	
2	229/00262/50	Circuit Board Cover	
3	209/00372/01	Fuse	
4	204/00116/00	Nut	
5	223/00123/00	Washer	
6	211/00107/00	Spacer	
7	229/00255/00	Insulating Sticker	
8	173/00027/10	Upper Front Panel	
9	225/00391/00	Overlay	UX models
	225/00392/00	Overlay	SX models
	9001890	Logo Decal	HX models
10	44018901	Contact Block	
11	209/00099/25	Switch Base	
12	209/00099/29	Switch Knob	Steam and electric heat
13	44018701	Contact Block	
14	44018801	Pushbutton	
15	209/00326/21	Programming Key	Key code 455
16	209/00326/20	Programming Key Contact Switch	Includes item 15
17	F9001561	Overlay	
18	211/00140/00	Spacer	
19	209/00580/03	Display	
20	210/00204/00	Flat Cable	
21	B12388305	Ribbon Assembly	
22	204/00008/00	Nut	
23	203/00007/00	Washer	

info@zipnasklade.ru
8(800)500-69-51

© Copyright, Alliance Laundry Systems LLC – DO NOT COPY or TRANSMIT

Control Panel - PS40F

Models CHF165ANH, HF730_PS40F, HF900_PS40F, IHF165ANH, IHF730ANH and IHF900ANH

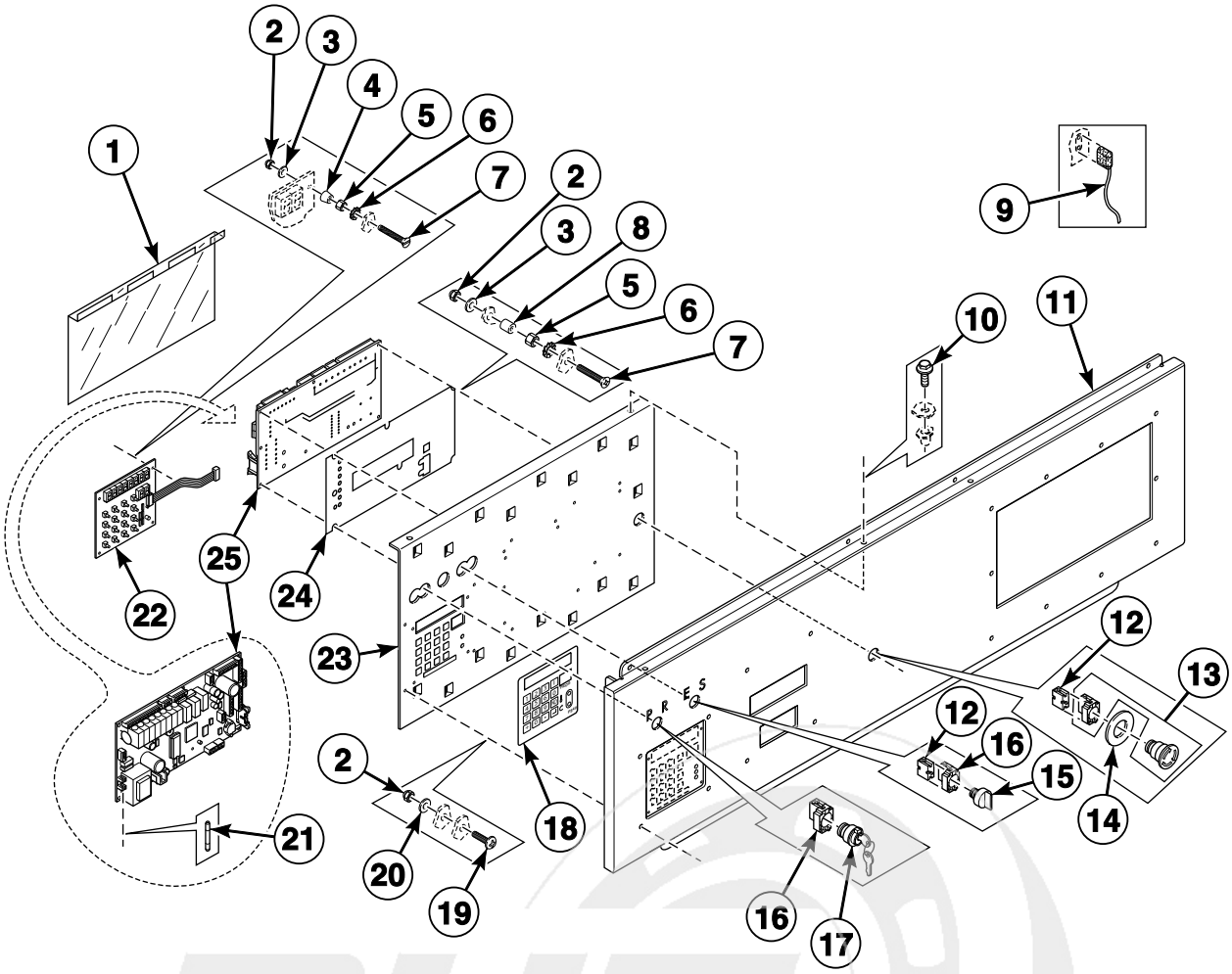

info@zipnasklade.ru
8(800)500-69-51

© Copyright, Alliance Laundry Systems LLC – DO NOT COPY or TRANSMIT

Control Panel - PS40F

REF	PART NO.	DESCRIPTION	COMMENTS
1	229/00262/00	Circuit Board Cover	
2	204/00116/00	Nut	
3	223/00123/00	Washer	
4	223/00008/01	Handle Grommet	
5	204/00008/00	Nut	
6	203/00007/00	Washer	
7	207/00025/00	Screw	
8	211/00122/00	Standoff	
9	210/00902/00	Infrared Cable	
10	206/00099/00	Bolt	
11	173/00002/00	Upper Front Panel	
12	209/00099/26	Contact Switch	
13	209/00248/20	Mushroom Pushbutton	
14	209/00520/00	Telem Sticker	
15	209/00099/29	Switch Knob	
16	209/00099/25	Switch Base	
17	209/00326/20	Programming Key Contact Switch	
18	225/00365/00	Overlay	
19	207/00113/00	Screw	
20	202/00004/00	Washer	
21	209/00372/01	Fuse	
22	209/00552/01	Keypad	
23	173/00012/00	Mounting Plate	
24	229/00255/00	Insulating Sticker	
25	B12351701	Main Board	

info@zipnasklade.ru
8(800)500-69-51

© Copyright, Alliance Laundry Systems LLC – DO NOT COPY or TRANSMIT

Control Panel - Cygnus Professional

Models HF730_CYGNUS-PRO, HF900_CYGNUS-PRO, IHF165ZNH, IHF730ZNH and IHF900ZNH

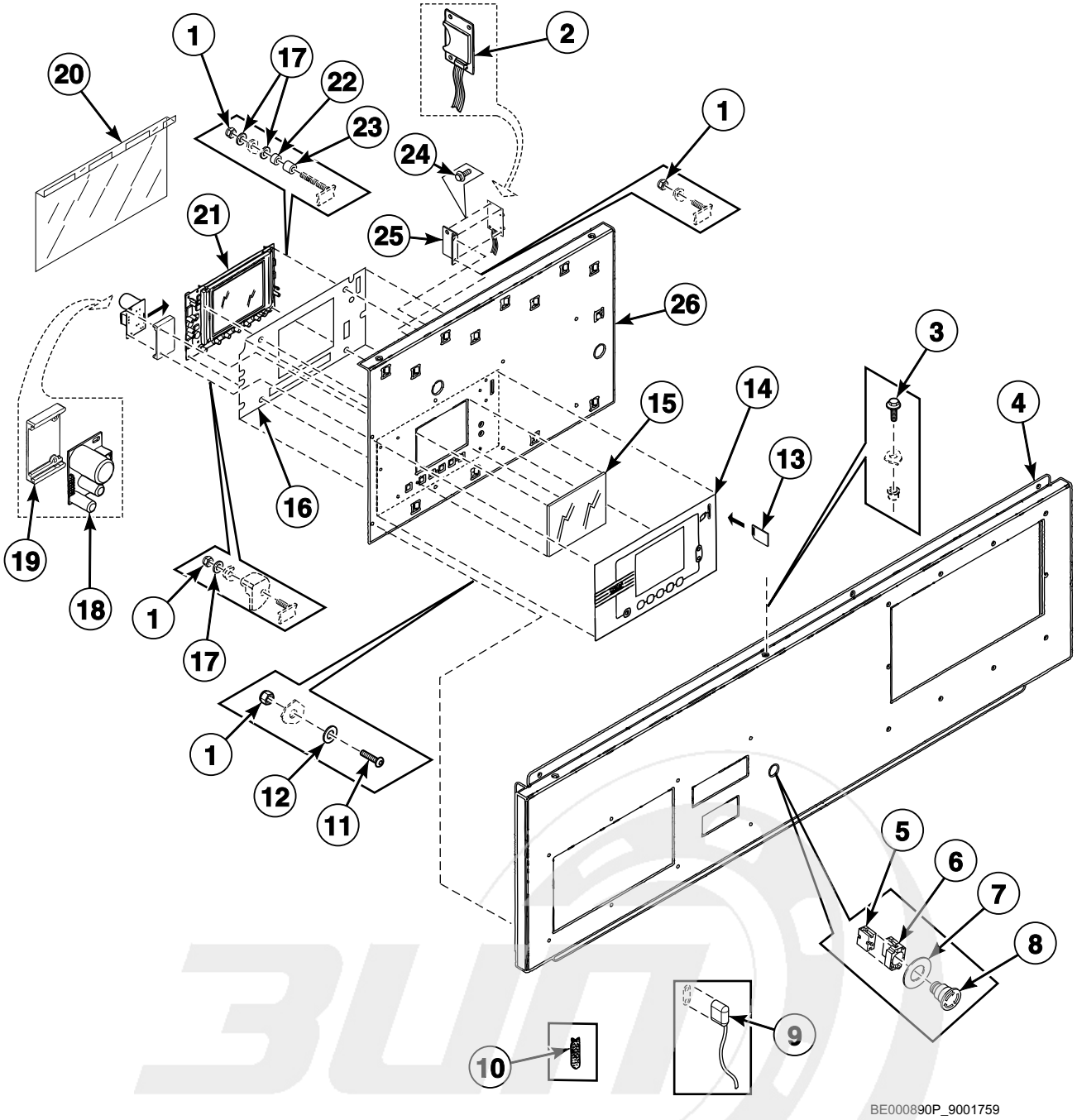

info@zipnasklade.ru
8(800)500-69-51

© Copyright, Alliance Laundry Systems LLC – DO NOT COPY or TRANSMIT

Control Panel - Cygnus Professional

REF	PART NO.	DESCRIPTION	COMMENTS
1	204/00116/00	Nut	
2	B12305201	Memory Card PC-Board	Models made prior to 4/5/2011 require a firmware upgrade
3	206/00099/00	Bolt	
4	173/00042/00	Front Panel	
5	209/00099/26	Contact Switch	
6	209/00099/20	Emergency Switch Pushbutton	
7	209/00520/00	Telem Sticker	
8	209/00248/20	Mushroom Pushbutton	
9	210/00902/00	Infrared Cable	
10	223/00348/00	Datacard Cover	
11	207/00113/00	Screw	
12	202/00004/00	Washer	
13	209/02022/00	Datacard	
14	225/10313/00	Operating Sticker	
15	225/00321/00	Plexi Frame	
16	229/00268/00	Insulating Sticker	
17	223/00123/00	Washer	
18	209/02010/00	Door Lock PC-Board	
19	223/00374/00	Mounting Plate	
20	229/00289/00	Circuit Board Cover	
21	209/02002/Z02	Display and Printboard	
22	211/00128/00	Printboard Separator	
23	211/00122/00	Standoff	
24	211/00145/00	Standoff	
25	111/01893/00	Printboard Support Card	
26	173/00013/20	Printboard Display Plate Assembly	

info@zipnasklade.ru
8(800)500-69-51

© Copyright, Alliance Laundry Systems LLC – DO NOT COPY or TRANSMIT

Control Panel - PRO

Models SX165Z, SX200Z, UX165Z and UX200Z

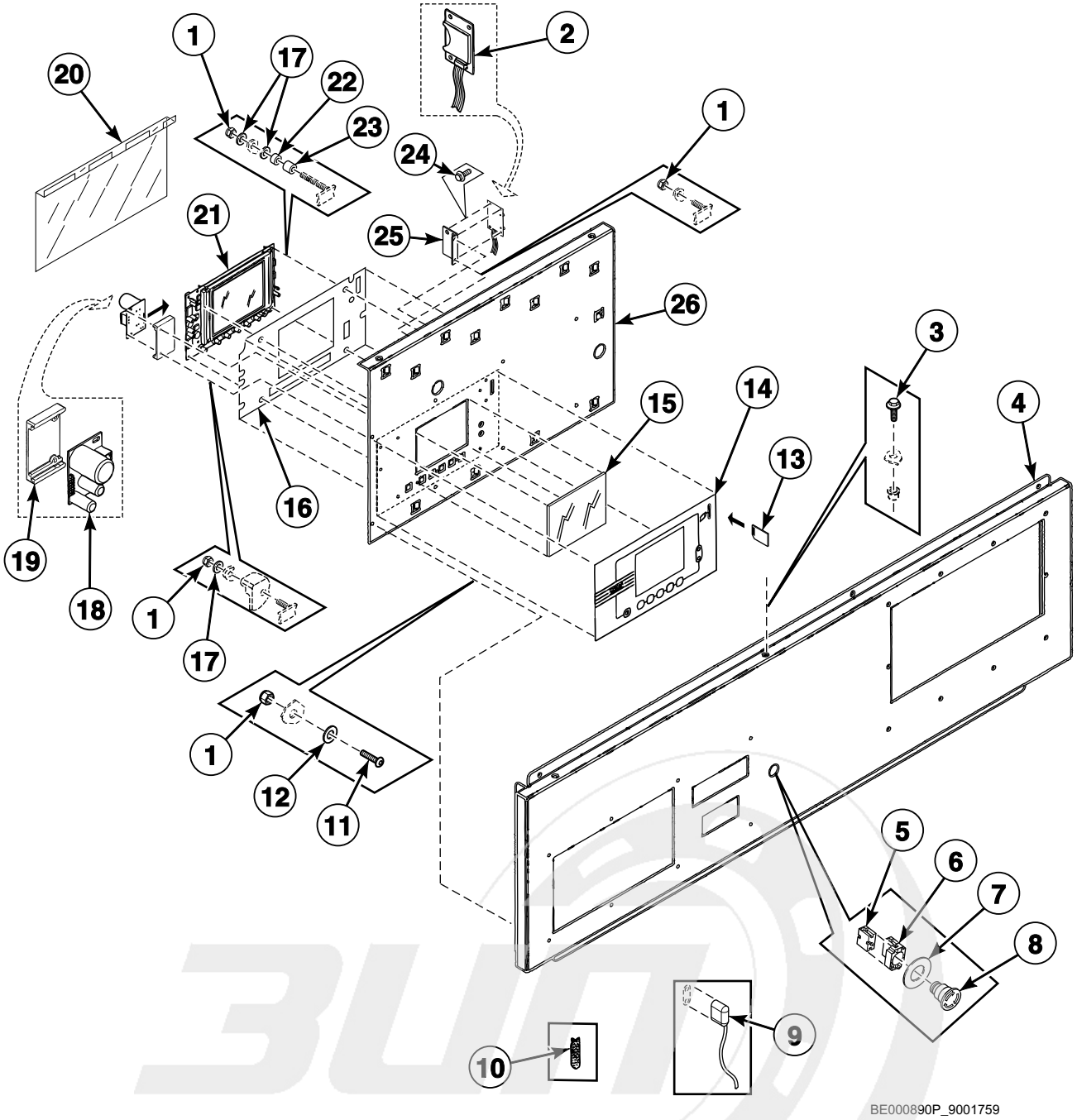

info@zipnasklade.ru
8(800)500-69-51

© Copyright, Alliance Laundry Systems LLC – DO NOT COPY or TRANSMIT

Control Panel - PRO

REF	PART NO.	DESCRIPTION	COMMENTS
1	204/00116/00	Nut	
2	B12305201	Memory Card PC-Board	Models made prior to 4/5/2011 require a firmware upgrade
3	206/00099/00	Bolt	
4	173/00042/00	Front Panel	
5	209/00099/26	Contact Switch	
6	209/00099/20	Emergency Switch Pushbutton	
7	209/00520/00	Telem Sticker	
8	209/00248/20	Mushroom Pushbutton	
9	210/00902/00	Infrared Cable	
10	223/00348/00	Datacard Cover	
11	207/00113/00	Screw	
12	202/00004/00	Washer	
13	209/02022/00	Datacard	
14	B12568801	Overlay	
	B12568901	Overlay	
15	225/00321/00	Plexi Frame	
16	229/00268/00	Insulating Sticker	
17	223/00123/00	Washer	
18	209/02010/00	Door Lock PC-Board	
19	223/00374/00	Mounting Plate	
20	229/00289/00	Circuit Board Cover	
21	209/02002/Z02	Display and Printboard	
22	211/00128/00	Printboard Separator	
23	211/00122/00	Standoff	
24	211/00145/00	Standoff	
25	111/01893/00	Printboard Support Card	
26	173/00013/20	Printboard Display Plate Assembly	

info@zipnasklade.ru
8(800)500-69-51

© Copyright, Alliance Laundry Systems LLC – DO NOT COPY or TRANSMIT

Control Panel - Cygnus Premium and Cygnus Ultra

Models CHF730U, CS165_CYGNUS-ULTRA, HF730_CYGNUS-PREM_OPL, HF900_CYGNUS-PREM_OPL and IHF730U

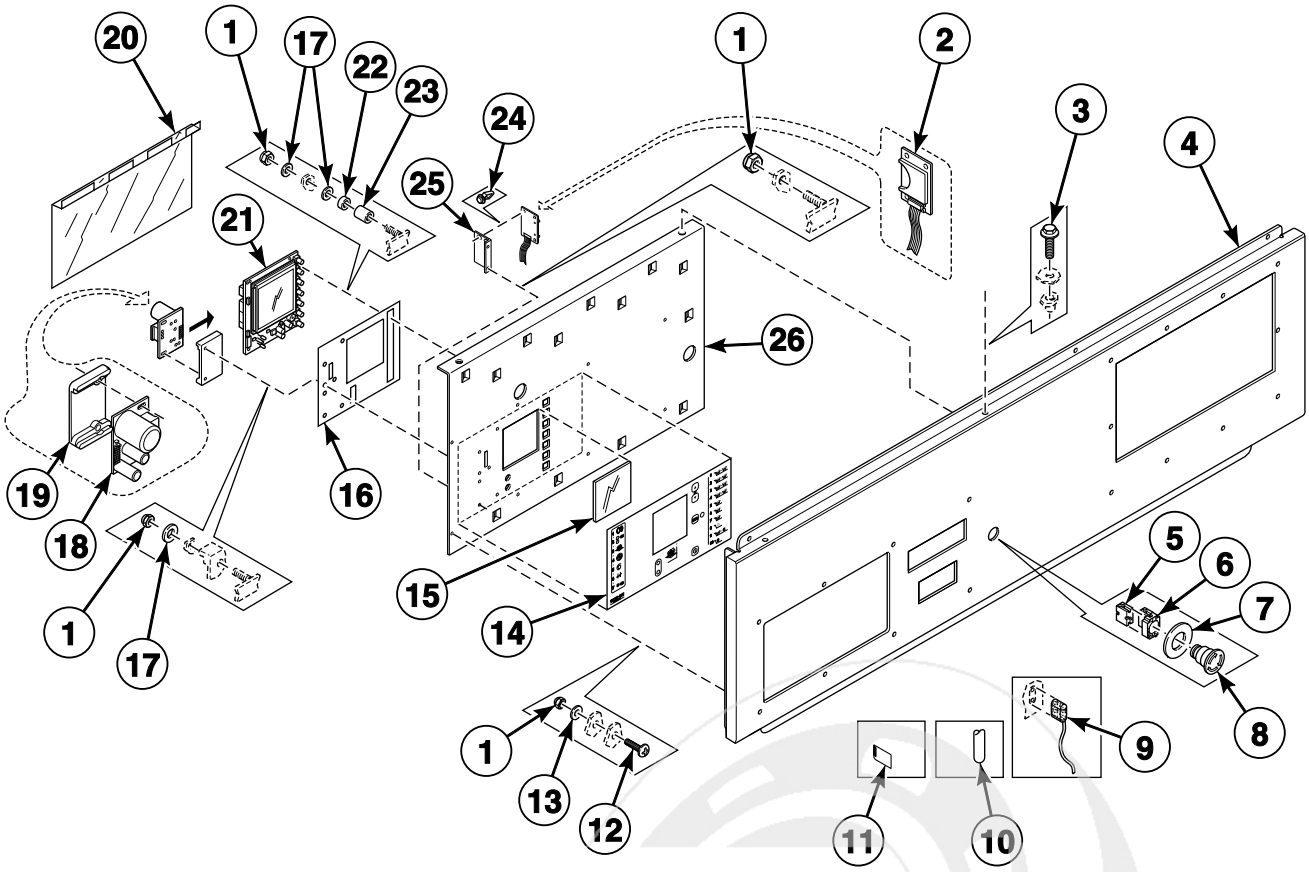

BE000891P_9001759

info@zipnasklade.ru
8(800)500-69-51

© Copyright, Alliance Laundry Systems LLC – DO NOT COPY or TRANSMIT

Control Panel - Cygnus Premium and Cygnus Ultra

REF	PART NO.	DESCRIPTION	COMMENTS
1	204/00116/00	Nut	
2	B12305201	Memory Card PC-Board	
3	206/00099/00	Bolt	
4	173/00042/00	Front Panel	
5	209/00099/26	Contact Switch	
6	209/00099/20	Emergency Switch Pushbutton	
7	209/00520/00	Telem Sticker	
8	209/00248/20	Mushroom Pushbutton	
9	210/00902/00	Infrared Cable	
10	223/00348/00	Datacard Cover	
12	207/00113/00	Screw	
13	202/00004/00	Washer	
11	209/02022/00	Datacard	
14	225/10427/00	Operating Sticker	Models HF730_CYGNUS-PREM_OPL and HF900_CYGNUS-PREM_OPL; Models without datacard opening
	255/10404/00	Operating Sticker	Models HF730_CYGNUS-PREM_OPL and HF900_CYGNUS-PREM_OPL; Models with datacard opening
	B12456701	Operating Sticker	Models CHF730U, CS165_CYGNUS-ULTRA and IHF730U
15	225/00323/00	Plexi Frame	
16	229/00268/00	Insulating Sticker	
17	223/00123/00	Washer	
18	209/02010/00	Door Lock PC-Board	
19	223/00374/00	Mounting Plate	
20	229/00289/00	Circuit Board Cover	
21	209/02015/02	Printboard	
22	211/00128/00	Printboard Separator	
23	211/00122/00	Standoff	
24	211/00145/00	Standoff	
25	111/01893/00	Printboard Support Card	
26	173/00013/30	Printboard Display Plate Assembly	

info@zipnasklade.ru
8(800)500-69-51

© Copyright, Alliance Laundry Systems LLC – DO NOT COPY or TRANSMIT

Control Module

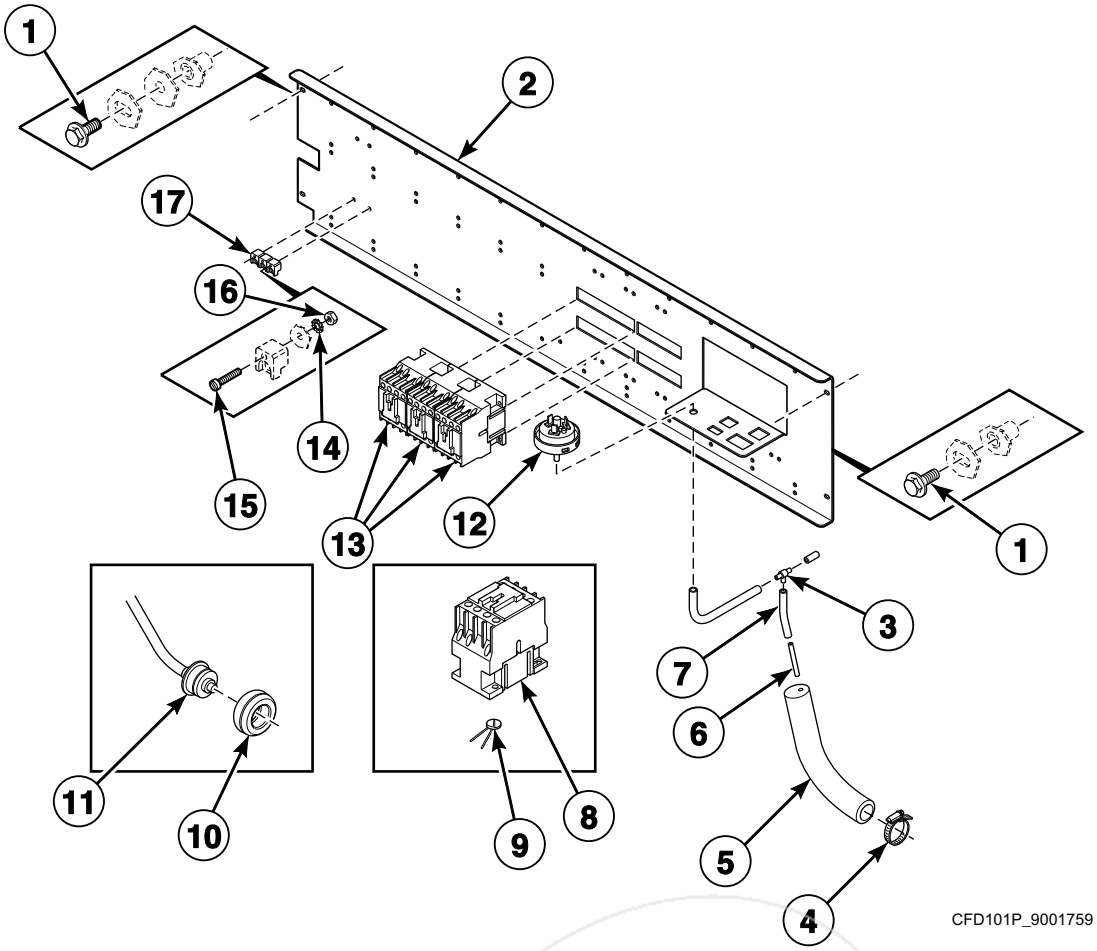

info@zipnasklade.ru
8(800)500-69-51

© Copyright, Alliance Laundry Systems LLC – DO NOT COPY or TRANSMIT

Control Module

REF	PART NO.	DESCRIPTION	COMMENTS
1	206/00099/00	Bolt	
2	229/00262/20	Electrical Components Plate	
3	223/00173/10	Pressure Switch Hose Tee	
4	223/00223/00	Hose Clamp	
5	223/00210/00	Pressure Switch Elbow	
6	223/00016/00	Hose Barb	
7	223/00333/00	Pressure Hose	
8	209/00041/04	Contactor	
9	209/00356/00	Noise Suppressor	
10	225/10004/00	Thermostat Seal	
11	210/01064/16	Thermostat	Cygnus and PRO control models
	210/01304/16	Thermostat	All other models
12	209/00007/50	Pressure Switch	Models through 7/8/2008
	209/00029/00	Water Level Switch	Models starting 7/8/2008
13	209/00148/02	Contactor	
14	203/00006/00	Washer	
15	207/00008/00	Screw	
16	204/00007/00	Nut	
17	209/00005/00	Terminal Block	

info@zipnasklade.ru
8(800)500-69-51

© Copyright, Alliance Laundry Systems LLC – DO NOT COPY or TRANSMIT

Top, Left Side and Front Panels

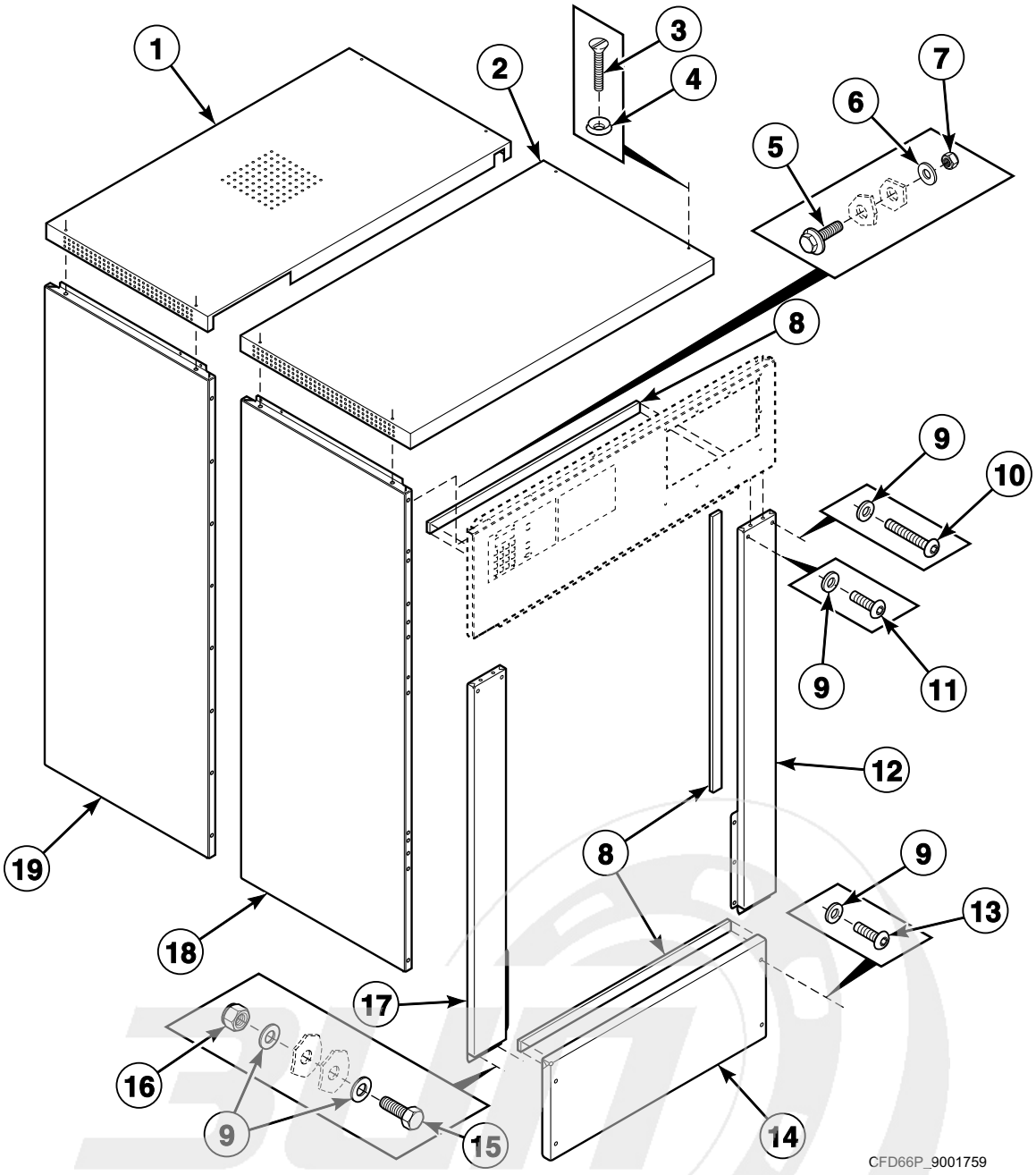

info@zipnasklade.ru
8(800)500-69-51

© Copyright, Alliance Laundry Systems LLC – DO NOT COPY or TRANSMIT

Top, Left Side and Front Panels

REF	PART NO.	DESCRIPTION	COMMENTS
1	173/00001/01	Rear Cabinet Top	*HF165, *HF730 and *X165 models
	190/00001/01	Rear Cabinet Top	All other models
2	173/00001/02	Front Cabinet Top	*HF165, *HF730 and *X165 models
	190/00001/02	Front Cabinet Top	All other models
3	207/00123/00	Screw	
4	208/00009/00	Washer	
5	206/00099/00	Bolt	
6	202/00106/00	Washer	
7	204/00106/00	Nut	
8	246/00149/00	Gasket	
9	208/00009/00	Washer	*X models
	202/00110/00	Washer	*HF models
10	208/00121/00	Screw	
11	208/00125/00	Screw	
12	173/00003/10	Front Right Panel	
13	208/00124/00	Screw	*X models
	207/00123/00	Screw	*HF models
14	173/00004/00	Lower Front Panel	
15	206/00042/00	Bolt	
16	204/00109/00	Nut	
17	173/00003/20	Front Left Panel	
18	173/00005/00	Side Panel	*HF165, *HF730 and *X165 models; Left front
	190/00005/00	Side Panel	All other models; Left front
19	173/00006/00	Side Panel	*HF165, *HF730 and *X165 models; Left rear
	190/00006/00	Side Panel	All other models; Left rear

info@zipnasklade.ru
8(800)500-69-51

© Copyright, Alliance Laundry Systems LLC – DO NOT COPY or TRANSMIT

Back and Right Side Panels

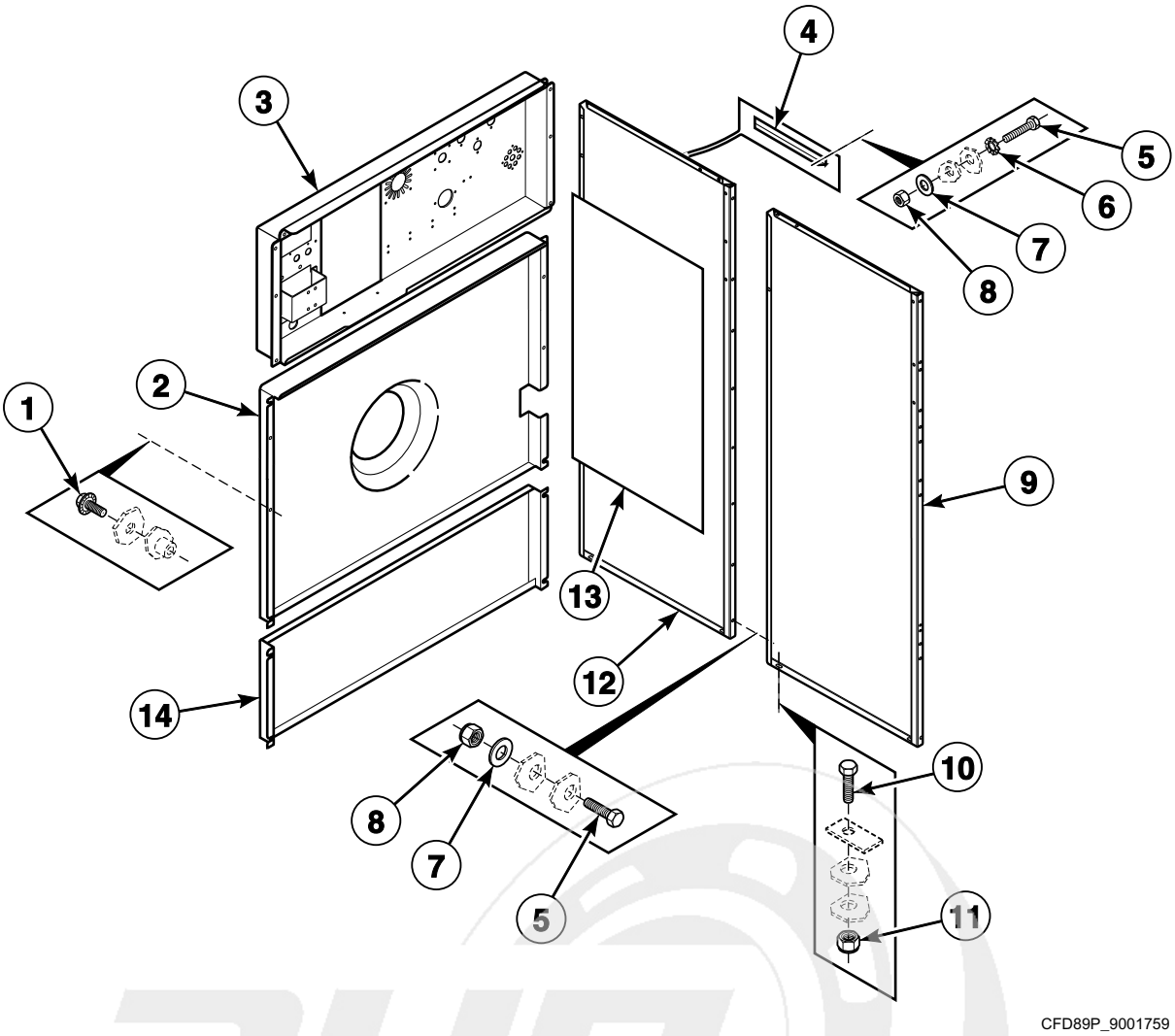

info@zipnasklade.ru
8(800)500-69-51

© Copyright, Alliance Laundry Systems LLC – DO NOT COPY or TRANSMIT

Back and Right Side Panels

REF	PART NO.	DESCRIPTION	COMMENTS
1	206/00099/00	Bolt	
2	173/00007/02	Lower Rear Panel	
3	173/00008/00	Upper Rear Panel	
4	153/00103/01	Side Panel Support Assembly	
5	205/00104/00	Bolt	
6	203/00004/00	Washer	
7	202/00110/00	Washer	
8	204/00106/00	Nut	
9	173/00006/00	Side Panel	*HF165, *HF730 and *X165 models; Right front
	190/00006/00	Side Panel	All other models; Right front
10	205/00105/00	Bolt	
11	204/00009/00	Nut	
12	173/00005/00	Side Panel	*HF165, *HF730 and *X165 models; Right rear
	190/00005/00	Side Panel	All other models; Right rear
13	246/00079/00	Side Panel Gasket	
14	173/00007/01	Lower Rear Panel	

info@zipnasklade.ru
8(800)500-69-51

© Copyright, Alliance Laundry Systems LLC – DO NOT COPY or TRANSMIT

Upper Back Panel (Drawing 1 of 5)

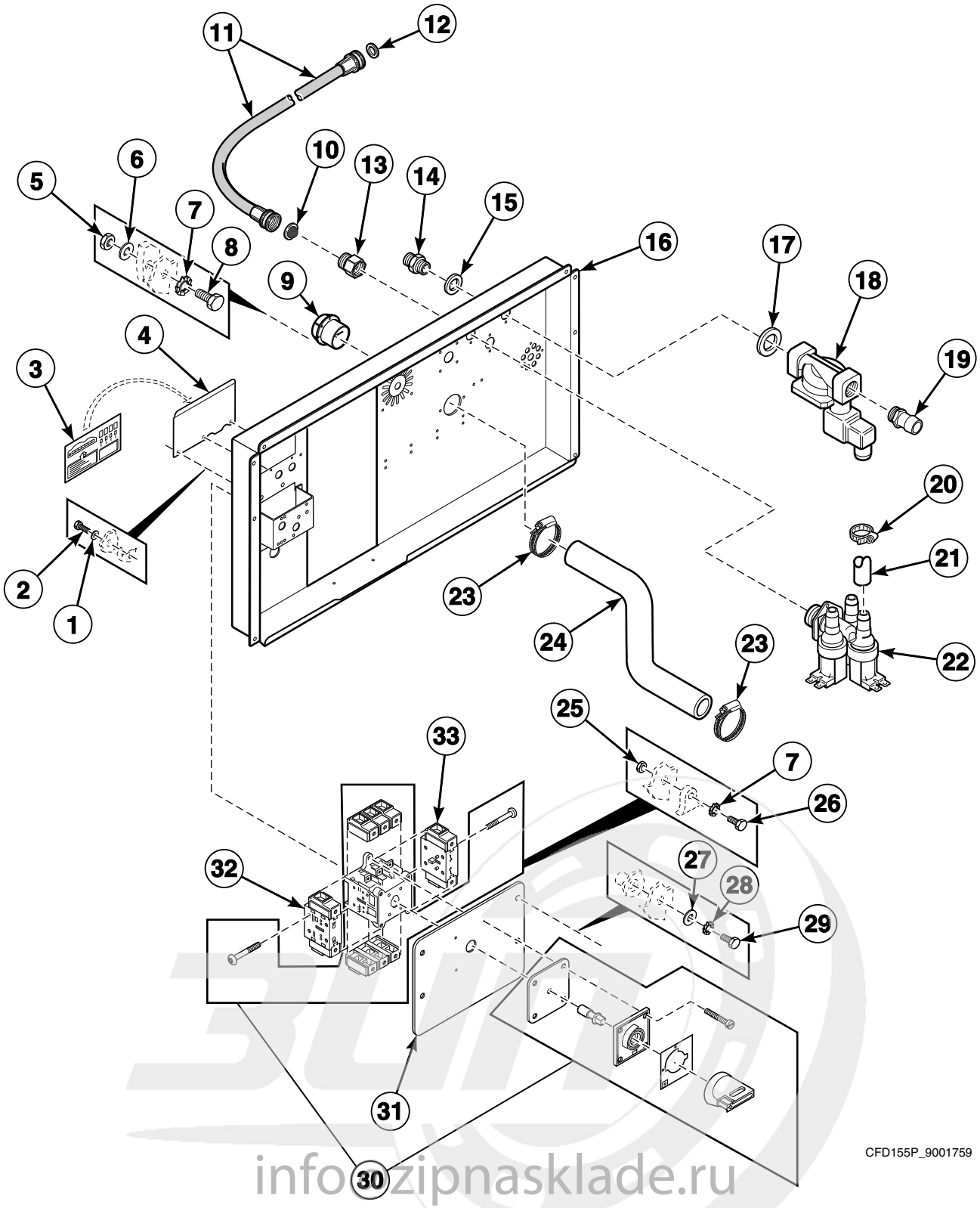

info@zipnasklade.ru
8(800)500-69-51

© Copyright, Alliance Laundry Systems LLC – DO NOT COPY or TRANSMIT

Upper Back Panel (Drawing 1 of 5)

REF	PART NO.	DESCRIPTION	COMMENTS
1	202/00102/00	Washer	
2	207/00110/00	Screw	
3	229/00068/02	Electrical Connection Sticker	
4	140/00010/01	Electrical Connection Cover	
5	204/00007/00	Nut	
6	202/00004/00	Washer	
7	203/00006/00	Washer	
8	206/00027/00	Bolt	
9	223/00102/07	Hose Vent	
10	803615	Washer	Filter
11	F200185	Water Hose	
12	20290	Washer	
13	223/00050/01	Water Valve Adapter	Converts valve from metric to standard thread
14	223/00255/00	Coupling Sleeve	
15	202/00121/00	Washer	
16	173/00008/00	Upper Rear Panel	
17	223/00272/00	Washer	
18	253/10521/00	Inlet Valve	Metric thread
	253/10526/00	Inlet Valve	Standard thread; F380997P Water Valve Repair Kit
19	223/00254/00	Nipple	
20	223/00010/00	Hose Clamp	No. 10
21	223/00044/00	Water Hose	
22	209/00277/00	3-Way Inlet Valve	Metric thread; Item 13 is required to convert from metric to standard thread
23	223/00014/00	Hose Clamp	
24	223/00211/00	Vent Hose	
25	204/00105/00	Nut	
26	205/00116/00	Bolt	
27	202/00101/00	Washer	
28	203/00004/00	Washer	
29	205/00104/00	Bolt	
30	209/00526/00	Main Switch	
31	153/00027/22	Switch Bracket	
32	209/00528/00	Terminal Block	Ground
33	209/00527/00	Terminal Block	Neutral

info@zipnasklade.ru
8(800)500-69-51

© Copyright, Alliance Laundry Systems LLC – DO NOT COPY or TRANSMIT

Upper Back Panel (Drawing 2 of 5)

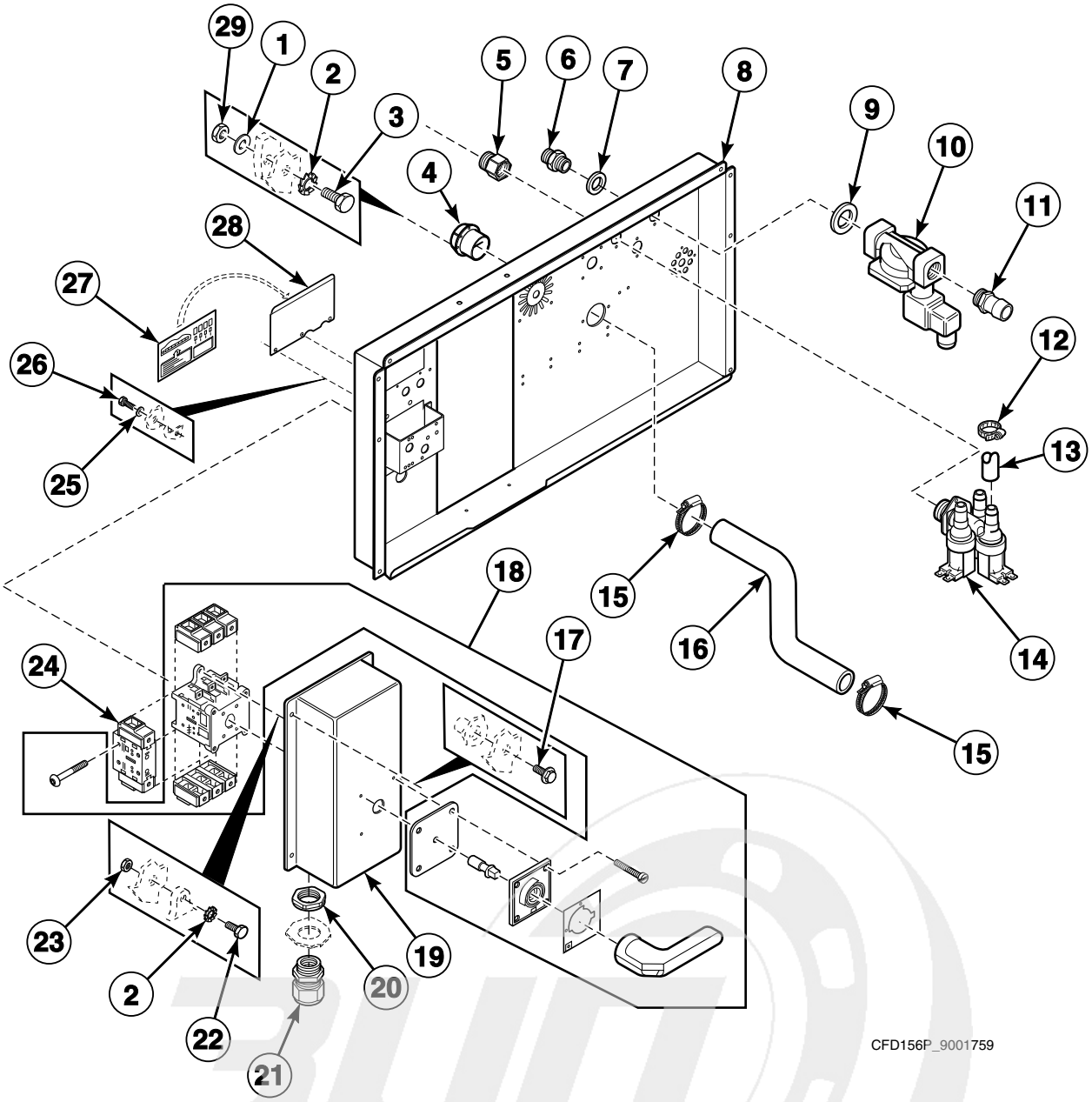

info@zipnasklade.ru
8(800)500-69-51

© Copyright, Alliance Laundry Systems LLC – DO NOT COPY or TRANSMIT

Upper Back Panel (Drawing 2 of 5)

REF	PART NO.	DESCRIPTION	COMMENTS
1	202/00004/00	Washer	
2	203/00006/00	Washer	
3	206/00027/00	Bolt	
4	223/00102/07	Hose Vent	
5	223/00050/01	Water Valve Adapter	Converts valve from metric to standard thread
6	223/00255/00	Coupling Sleeve	
7	202/00121/00	Washer	
8	173/00008/00	Upper Rear Panel	
9	223/00272/00	Washer	
10	253/10521/00	Inlet Valve	Metric thread
	253/10526/00	Inlet Valve	Standard thread
11	223/00254/00	Nipple	
12	223/00010/00	Hose Clamp	No. 10
13	223/00044/00	Water Hose	
14	209/00277/00	3-Way Inlet Valve	Metric thread; Item 5 is required to convert from metric to standard thread
15	223/00014/00	Hose Clamp	
16	223/00211/00	Vent Hose	
17	206/00099/00	Bolt	
18	209/00532/00	Main Switch	
19	173/00017/00	Main Switch Box	
20	211/00172/00	Nut	
21	211/00169/00	Strain Relief	
22	205/00116/00	Bolt	
23	204/00105/00	Nut	
24	209/00533/00	Terminal Block	Ground
25	202/00139/00	Washer	
26	207/00110/00	Screw	
27	229/00068/02	Electrical Connection Sticker	
28	140/00010/01	Electrical Connection Cover	
29	204/00007/00	Nut	

info@zipnasklade.ru
8(800)500-69-51

© Copyright, Alliance Laundry Systems LLC – DO NOT COPY or TRANSMIT

Upper Back Panel (Drawing 3 of 5)

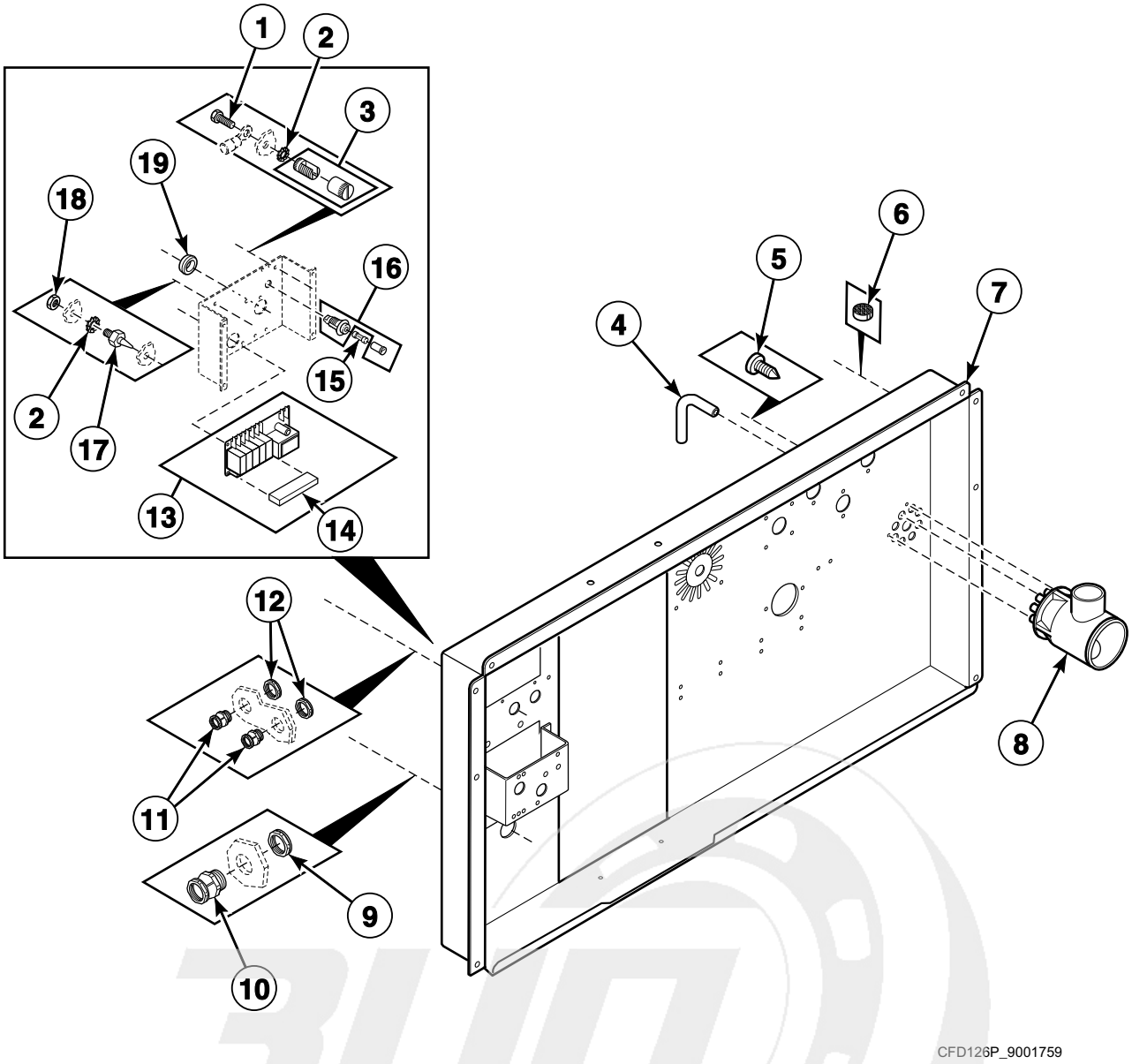

info@zipnasklade.ru
8(800)500-69-51

© Copyright, Alliance Laundry Systems LLC – DO NOT COPY or TRANSMIT

Upper Back Panel (Drawing 3 of 5)

REF	PART NO.	DESCRIPTION	COMMENTS
1	206/00088/00	Bolt	
2	203/00006/00	Washer	
3	209/00006/01	Ground Terminal	
4	223/00179/10	Pressure Hose	
5	B12347501	Screw	
6	211/00091/00	Plug	M20
	211/00087/00	Plug	30 mm
7	173/00008/00	Upper Rear Panel	
8	223/00249/00	Liquid Soap Manifold	
9	211/00172/00	Nut	
10	211/00169/00	Strain Relief	
11	211/00167/00	Cordlock	
12	211/00170/00	Nut	
13	209/00218/13	Soap Injection PCB with Fuse	Includes item 14
14	209/00996/00	Connector	
15	209/00468/00	Fuse	
16	209/00202/00	Fuse Holder	
17	211/00120/00	Standoff	
18	204/00007/00	Nut	
19	223/00198/00	Grommet	

info@zipnasklade.ru
8(800)500-69-51

© Copyright, Alliance Laundry Systems LLC – DO NOT COPY or TRANSMIT

Upper Back Panel (Drawing 4 of 5)

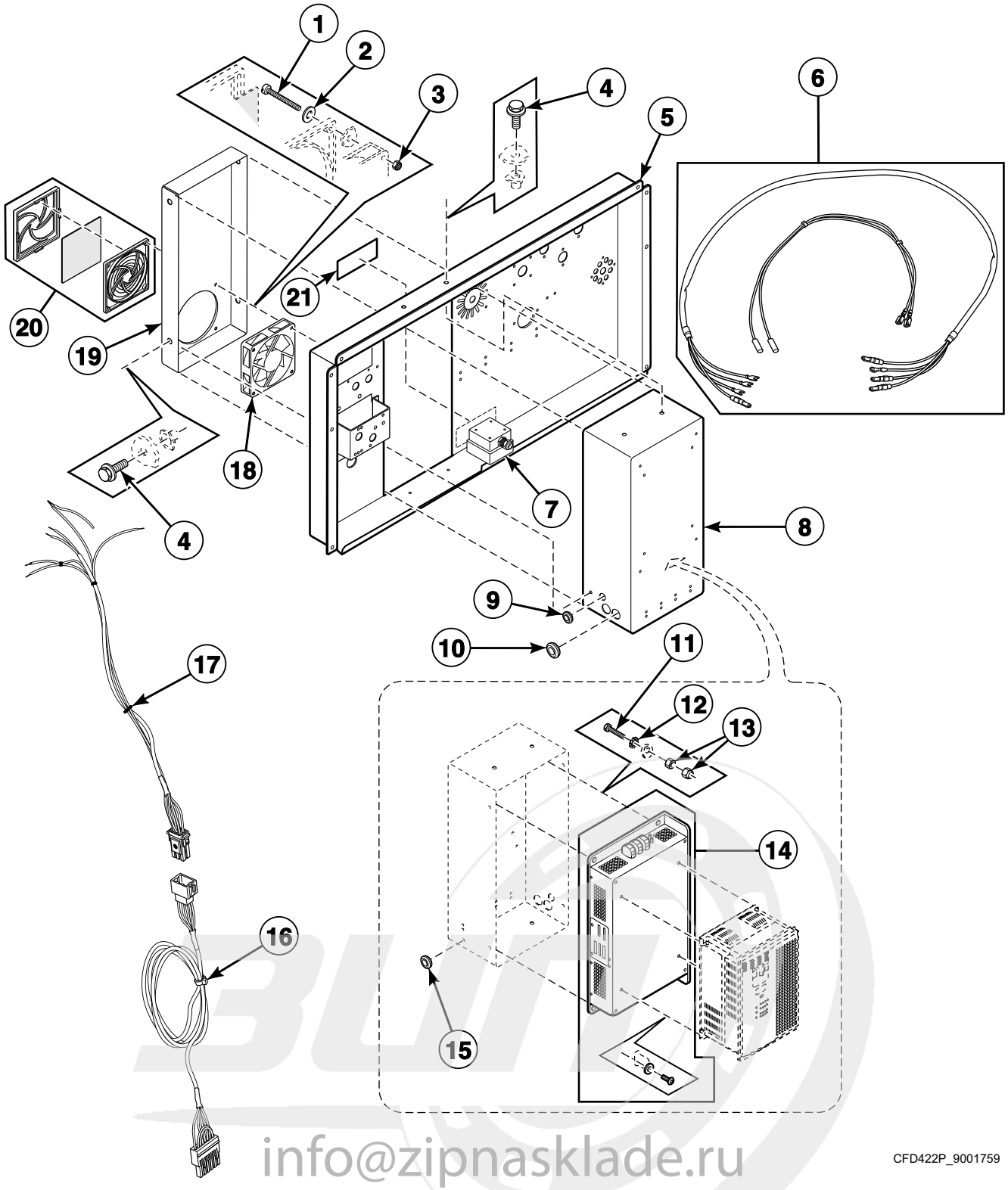

info@zipnasklade.ru
8(800)500-69-51

© Copyright, Alliance Laundry Systems LLC – DO NOT COPY or TRANSMIT

Upper Back Panel (Drawing 4 of 5)

REF	PART NO.	DESCRIPTION	COMMENTS
	227/00171/00	Parameter Unit Assembly	
	9001895	Parameter Unit Program Cable	
1	207/00031/00	Screw	
2	202/00004/00	Washer	
3	204/00114/00	Nut	
4	206/00099/00	Bolt	
5	173/00008/00	Upper Rear Panel	
6	210/30570/20	Inverter to Motor Harness	
7	209/00406/00	Transformer	480 to 240 Volt
	209/00311/00	Transformer	380 or 440 Volt to 220 Volt
8	173/00009/00	Inverter Box	
9	223/00174/00	Grommet	
10	223/00198/00	Grommet	
11	205/00108/00	Bolt	
12	203/00005/00	Washer	
13	204/00107/00	Nut	
14	227/00176/00	Inverter Drive Filter	380-480 Volt; Models CHF165ANH, CHF730U, CS165_CYGNUS-ULTRA, HF730_CYGNUS-PREM_OPL, HF730_CYGNUS-PRO, HF730_PS40F, HF900_CYGNUS-PREM_OPL, HF900_CYGNUS-PRO, HF900_PS40F, HX165PVNU6, HX165PVNU7, HX165PVPU7, HX165_WE-8, HX200PVNU7, HX200PVPU7, HX200_WE-8, IHF165ANH, IHF165ZNH, IHF730ANH, IHF730U, IHF730ZNH, IHF900ANH, IHF900ZNH, SX165PVNU6, SX165PVNU7, SX165PVPU7, SX165Z, SX165_WE-8, SX200PVNU7, SX200PVPU7, SX200Z, SX200_WE-8, UX165PVNU6, UX165PVNU7, UX165PVPU6, UX165PVPU7, UX165Z, UX165_WE-8, UX200PVNU7, UX200PVPU7, UX200Z and UX200_WE-8
	227/00182/00	Inverter Drive Filter	200-240 Volt; Models CHF165ANH, CHF730U, CS165_CYGNUS-ULTRA, HF730_CYGNUS-PREM_OPL, HF730_CYGNUS-PRO, HF730_PS40F, HF900_CYGNUS-PREM_OPL, HF900_CYGNUS-PRO, HF900_PS40F, HX165PVQU6, HX165PVQU7, HX165_WE-8, HX200PVQU7, HX200_WE-8, IHF165ANH, IHF165ZNH, IHF730ANH, IHF730U, IHF730ZNH, IHF900ANH, IHF900ZNH, SX165PVQU6, SX165PVQU7, SX165Z, SX165_WE-8, SX200PVQU7, SX200Z, SX200_WE-8, UX165PVQU6, UX165PVQU7, UX165Z, UX165_WE-8, UX200PVQU7, UX200Z and UX200_WE-8
15	223/00213/00	Grommet	
16	B12371101	Micro to Connector Harness	From the main control to the inverter drive; 200 Volt; Requires that the inverter jumper be in the ‘sink’ position
	210/01304/15	Micro to Connector Harness	From the main control to the inverter drive; 400 Volt; Requires that the inverter jumper be in the ‘source’ position
17	210/01064/14	Connector to Inverter Harness	From the main control to the inverter drive
18	209/00287/00	Cooling Fan	
19	173/00009/04	Inverter Box Top	
20	209/00465/01	Fan Grill	Models through 10/5/2008
	209/00287/11	AC Drive Filter	Models starting 10/6/2008
21	B12355001	Voltage Discharge Decal	

info@zipnasklade.ru
8(800)500-69-51

© Copyright, Alliance Laundry Systems LLC – DO NOT COPY or TRANSMIT

Upper Back Panel (Drawing 5 of 5)

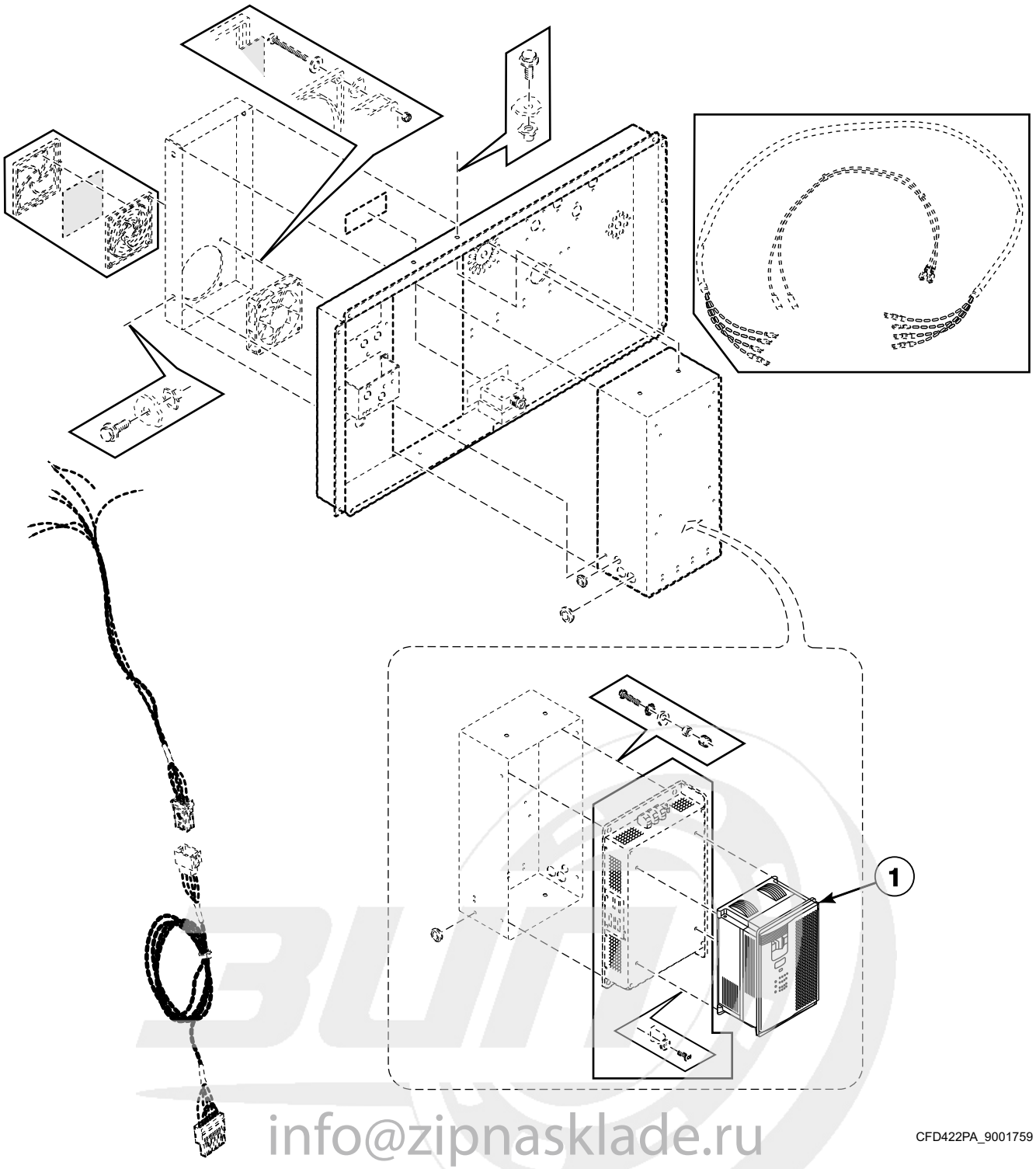

info@zipnasklade.ru
8(800)500-69-51

© Copyright, Alliance Laundry Systems LLC – DO NOT COPY or TRANSMIT

Upper Back Panel (Drawing 5 of 5)

REF	PART NO.	DESCRIPTION	COMMENTS
1	227/00219/00	Inverter	15 kW; 200 Volt; A700-series; Models HF900_CYGNUS-PREM_OPL, HF900_CYGNUS-PRO, IHF900ZNH, SX200Z and UX200Z; When replacing either the 11 kW motor or inverter drive with a 15 kW motor or inverter drive, both the 11 kW motor and inverter drive must be replaced with a 15 kW motor and inverter drive
	227/00213/00	Inverter	15 kW; 400 Volt; A700-series; Models HF900_CYGNUS-PREM_OPL, HF900_CYGNUS-PRO, IHF900ZNH, SX200Z and UX200Z; When replacing either the 11 kW motor or inverter drive with a 15 kW motor or inverter drive, both the 11 kW motor and inverter drive must be replaced with a 15 kW motor and inverter drive
	227/00207/00	Inverter	11 kW; 240 Volt; A700-series; Models CHF730U, HF730_CYGNUS-PREM_OPL, HF730_CYGNUS-PRO, IHF165ZNH, IHF730U, IHF730ZNH, SX165Z and UX165Z; For *X200 and *HF900 models made before Serial No. 0902900007 contact customer service for replacement information
	227/00208/00	Inverter	11 kW; 400 Volt; A700-series; Models HF730_CYGNUS-PRO, HF730_PS40F, IHF165ZNH, IHF730ZNH, SX200Z and UX200Z; For *X200 and *HF900 models made before Serial No. 0902900007 contact customer service for replacement information
	F8421021	Inverter Drive Kit	Used to convert from 500 to 700-series inverter drive; *165 and *730 models; 200 Volt/3 phase; 11 kW motor
	F8421121	Drive	700-series; *165 and *730 models; 200 Volt/3 phase; 11 kW motor
	F8421022	Inverter Drive Kit	Used to convert from 500 to 700-series inverter drive; *165 and *730 models; 400 Volt/3 phase; 11 kW motor
	F8421122	Drive	700-series; *165 and *730 models; 400 Volt/3 phase; 11 kW motor
	F8421023	Inverter Drive Kit	Used to convert from 500 to 700-series inverter drive; *200 and *900 models; 200 Volt/3 phase; 15 kW motor
	F8421123	Drive	700-series; *200 and *900 models; 200 Volt/3 phase; Used with11 kW motor
	F8421125	Drive	700-series; *200 and *900 models; 200 Volt/3 phase; Used with 15 kW motor
	F8421024	Inverter Drive Kit	Used to convert from 500 to 700-series inverter drive; *200 and *900 models; 400 Volt/3 phase; 15 kW motor
	F8421124	Drive	700-series; *200 and *900 models; 400 Volt/3 phase; Used with 11 kW motor
	F8421126	Drive	700-series; *200 and *900 models; 400 Volt/3 phase; Used with 15 kW motor

info@zipnasklade.ru
8(800)500-69-51

© Copyright, Alliance Laundry Systems LLC – DO NOT COPY or TRANSMIT

Supply Dispenser - Models Through 4/30/2009

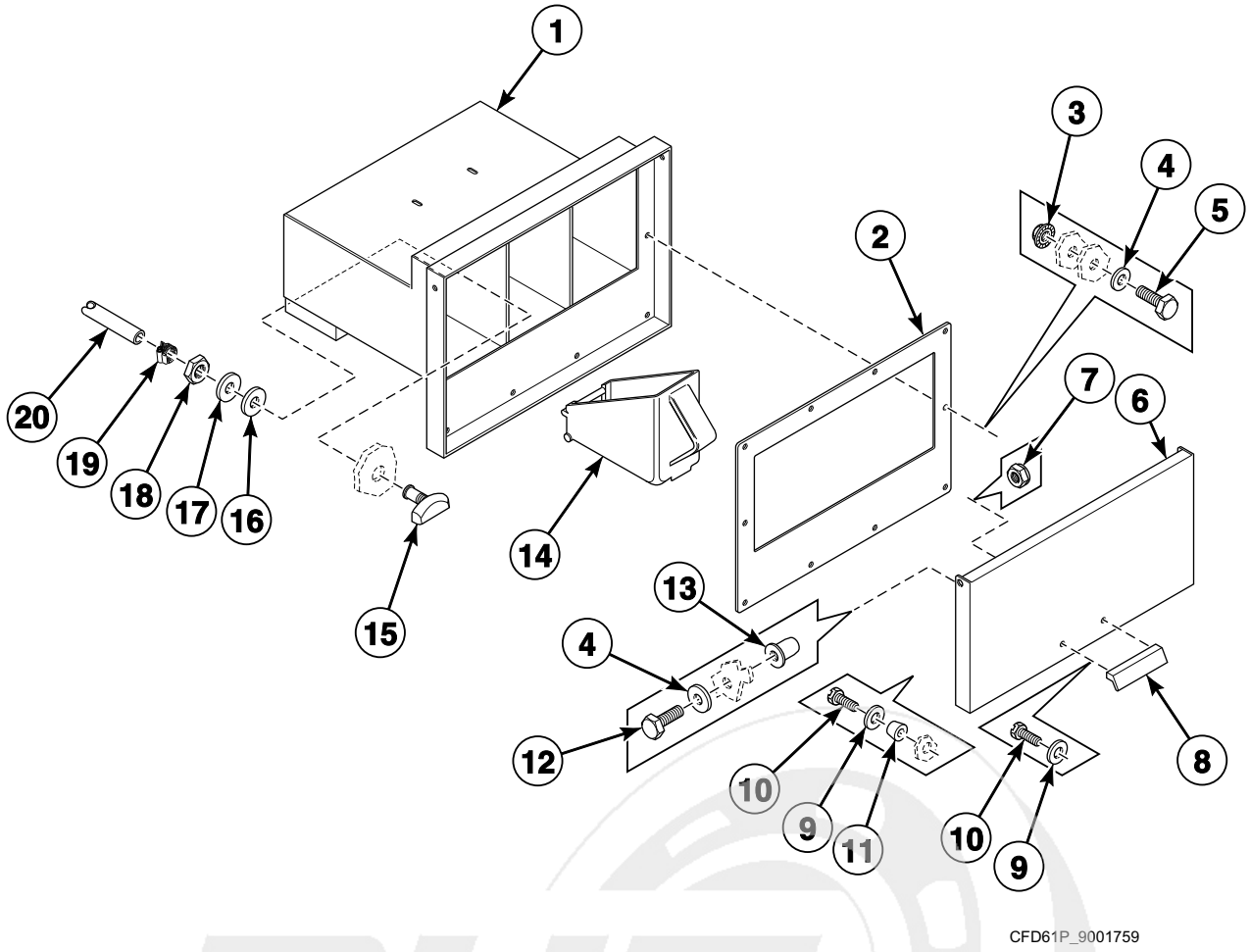

info@zipnasklade.ru
8(800)500-69-51

© Copyright, Alliance Laundry Systems LLC – DO NOT COPY or TRANSMIT

Supply Dispenser - Models Through 4/30/2009

REF	PART NO.	DESCRIPTION	COMMENTS
1	153/00072/00	Soap Dispenser	
2	153/00071/00	Soap Dispenser Cover Plate	
3	206/00101/00	Nut	
4	202/00101/00	Washer	
5	205/00105/00	Bolt	
6	153/00070/00	Soap Dispenser Cover	
7	204/00009/00	Nut	
8	223/00008/05	Soap Dispenser Cover Handle	
9	202/00102/00	Washer	
10	207/00110/00	Screw	
11	223/00008/01	Handle Grommet	
12	207/00126/00	Screw	
13	204/00301/00	Bushing	
14	253/00012/02	Soap Dispenser Cup	
15	223/00001/04	Prewash and Mainwash Nozzle	
16	223/00001/07	Washer	
17	201/00002/00	Washer	
18	204/00201/00	Nut	
19	223/00010/00	Hose Clamp	No. 10
20	223/00044/00	Water Hose	

info@zipnasklade.ru
8(800)500-69-51

© Copyright, Alliance Laundry Systems LLC – DO NOT COPY or TRANSMIT

Supply Dispenser - Models Starting 5/1/2009

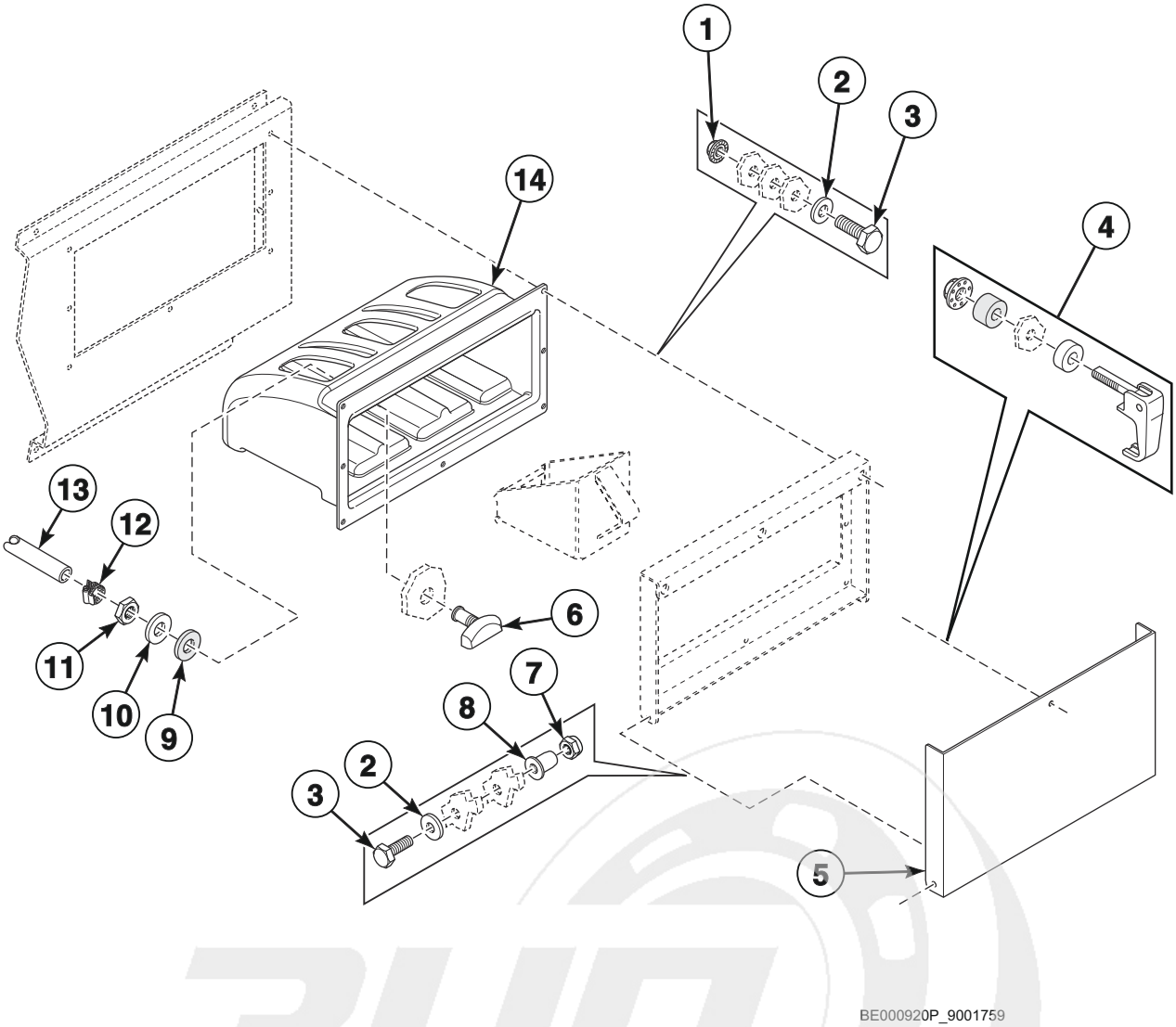

info@zipnasklade.ru
8(800)500-69-51

© Copyright, Alliance Laundry Systems LLC – DO NOT COPY or TRANSMIT

Supply Dispenser - Models Starting 5/1/2009

REF	PART NO.	DESCRIPTION	COMMENTS
1	206/00101/00	Nut	
2	202/00101/00	Washer	
3	205/00104/00	Bolt	
4	223/00392/00	Supply Dispenser Handle	
5	153/00089/00	Supply Dispenser Cover	
6	223/00001/04	Prewash and Mainwash Nozzle	
7	204/00009/00	Nut	
8	204/00301/00	Bushing	
9	223/00001/07	Washer	
10	201/00002/00	Washer	
11	204/00201/00	Nut	
12	223/00010/00	Hose Clamp	
13	223/00044/00	Water Hose	
14	223/00345/01	Supply Dispenser Box	

info@zipnasklade.ru
8(800)500-69-51

© Copyright, Alliance Laundry Systems LLC – DO NOT COPY or TRANSMIT

Plumbing (Drawing 1 of 3)

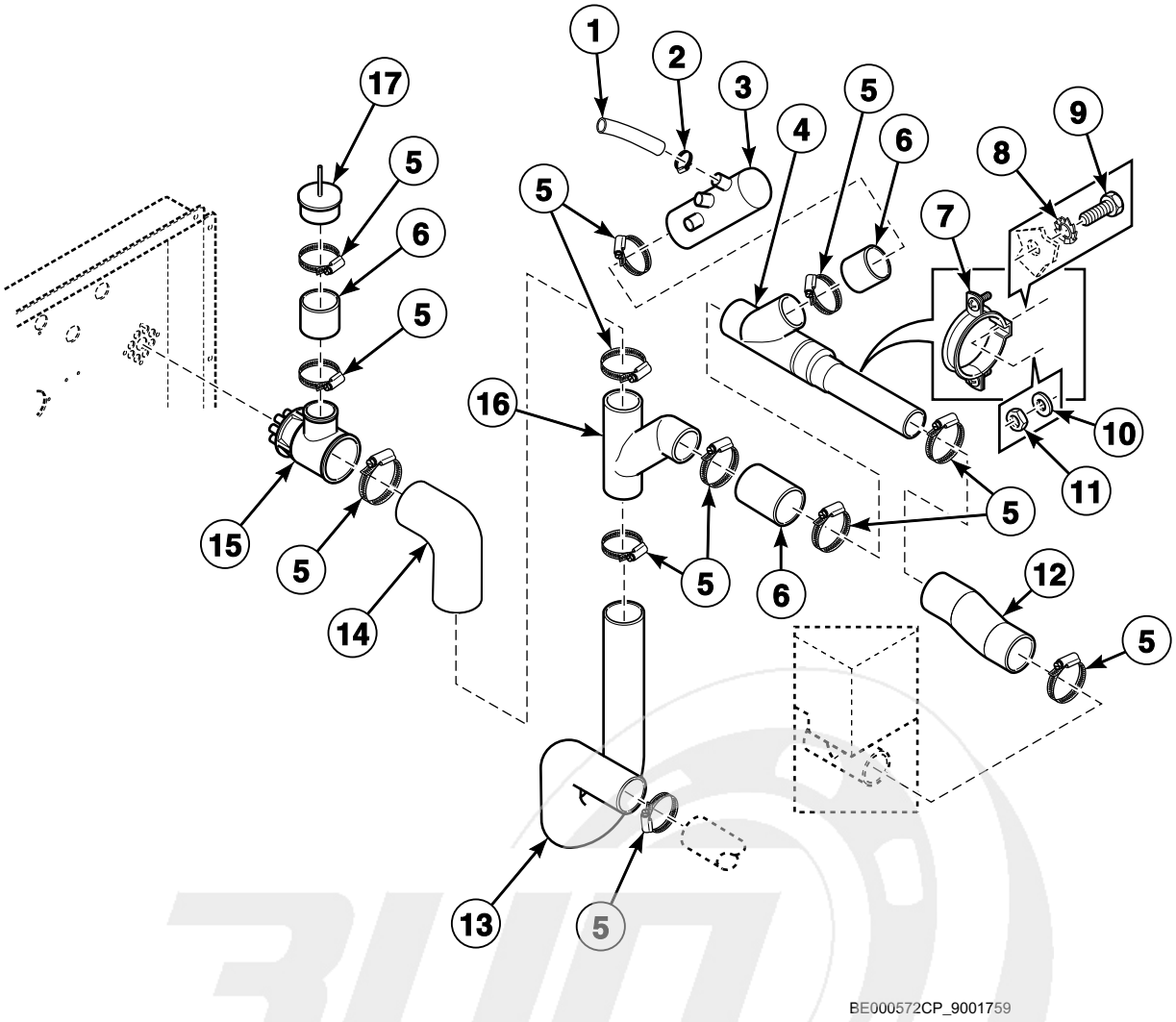

info@zipnasklade.ru
8(800)500-69-51

© Copyright, Alliance Laundry Systems LLC – DO NOT COPY or TRANSMIT

Plumbing (Drawing 1 of 3)

REF	PART NO.	DESCRIPTION	COMMENTS
1	223/00269/00	Water Hose	
2	223/00223/00	Hose Clamp	
3	153/00116/00	Manifold	
4	253/00021/00	Reducing Tee	
5	223/00071/00	Hose Clamp	
6	223/00141/00	Drain Valve to Drain Pipe Hose	
7	253/00019/00	Clamp	
8	203/00004/00	Washer	
9	205/00105/00	Bolt	
10	202/00110/00	Washer	
11	204/00106/00	Nut	
12	223/00107/02	Vent Hose	
13	223/00187/00	Soap Dispenser to Tub Hose	
14	223/00302/00	Elbow	
15	223/00249/00	Liquid Soap Manifold	
16	253/00030/00	Y Pipe	
17	253/00035/00	Y Pipe	

info@zipnasklade.ru
8(800)500-69-51

© Copyright, Alliance Laundry Systems LLC – DO NOT COPY or TRANSMIT

Plumbing (Drawing 2 of 3)

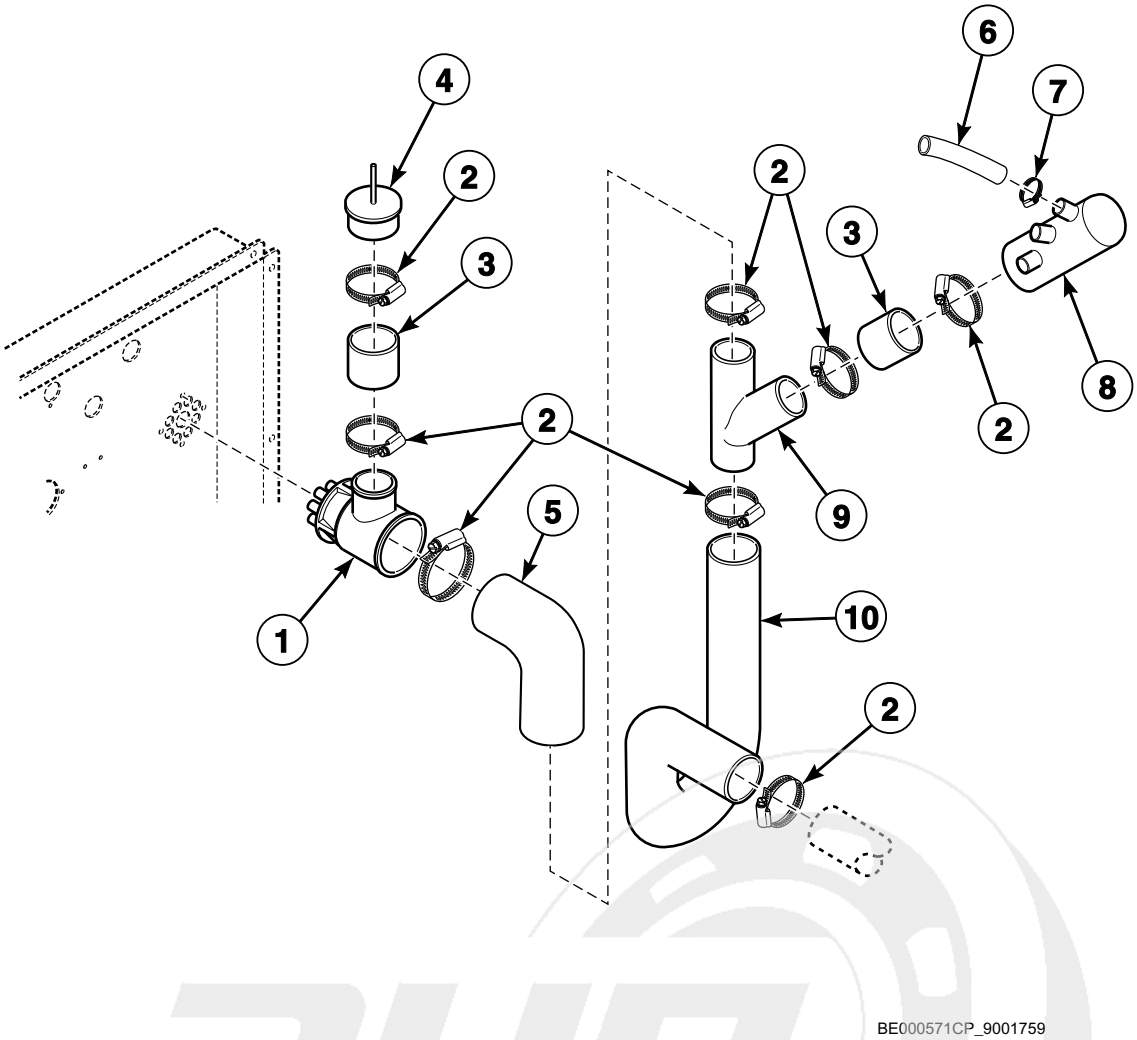

info@zipnasklade.ru
8(800)500-69-51

© Copyright, Alliance Laundry Systems LLC – DO NOT COPY or TRANSMIT

Plumbing (Drawing 2 of 3)

REF	PART NO.	DESCRIPTION	COMMENTS
1	223/00249/00	Liquid Soap Manifold	
2	223/00071/00	Hose Clamp	
3	223/00141/00	Drain Valve to Drain Pipe Hose	
4	253/00035/00	Y Pipe	
5	223/00302/00	Elbow	
6	223/00269/00	Water Hose	
7	223/00223/00	Hose Clamp	
8	173/00026/00	Manifold	
9	253/00017/00	Y Pipe	
10	223/00187/00	Soap Dispenser to Tub Hose	

info@zipnasklade.ru
8(800)500-69-51

© Copyright, Alliance Laundry Systems LLC – DO NOT COPY or TRANSMIT

Plumbing (Drawing 3 of 3)

*HF165, *HF730 and *X165 Models Starting Serial No. 11010740003
*HF900 and *X200 Models Starting Serial No. 11010900006

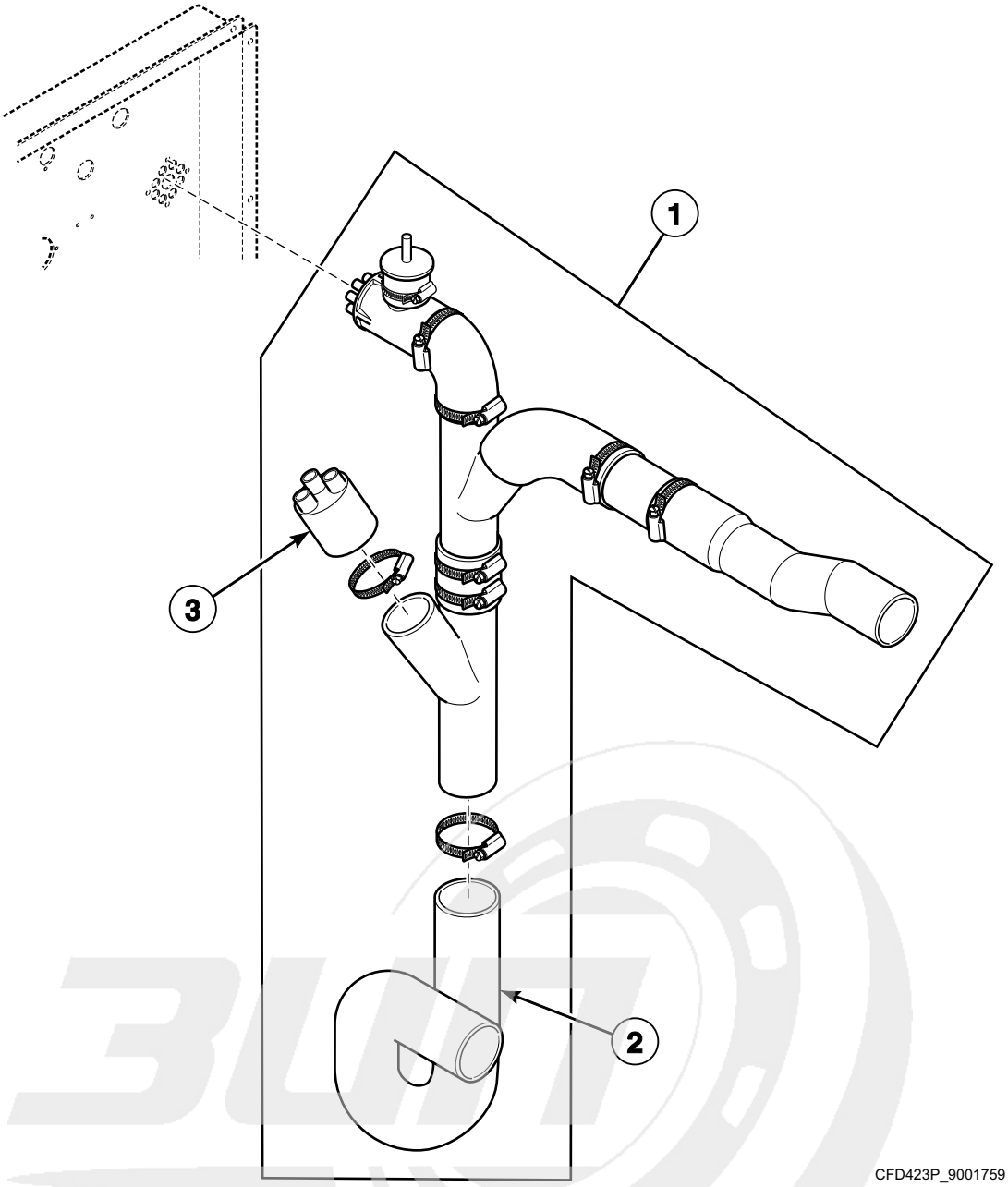

info@zipnasklade.ru
8(800)500-69-51

© Copyright, Alliance Laundry Systems LLC – DO NOT COPY or TRANSMIT

Plumbing (Drawing 3 of 3)

REF	PART NO.	DESCRIPTION	COMMENTS
1	B12374201	Plumbing Assembly	*HF165, *HF730 and *X165 models
	B12374301	Plumbing Assembly	*HF900 and *X200 models
2	223/00187/00	Soap Dispenser to Tub Hose	
3	173/00056/00	Liquid Soap Manifold	

info@zipnasklade.ru
8(800)500-69-51

© Copyright, Alliance Laundry Systems LLC – DO NOT COPY or TRANSMIT

Balance Switch

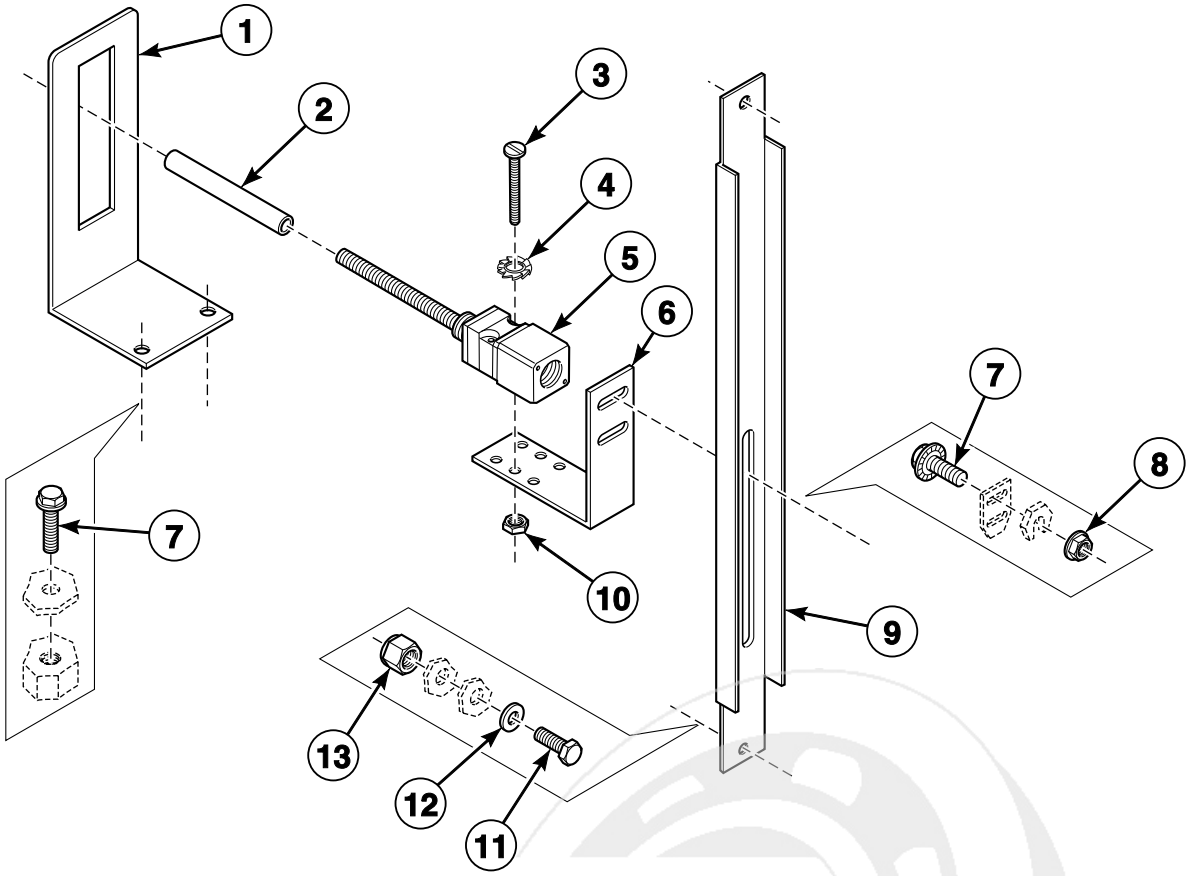

CFD64P_9001759

info@zipnasklade.ru
8(800)500-69-51

© Copyright, Alliance Laundry Systems LLC – DO NOT COPY or TRANSMIT

Balance Switch

REF	PART NO.	DESCRIPTION	COMMENTS
1	153/00046/00	Out-of-Balance Detector Plate	
2	223/00246/00	Out-of-Balance Switch Boot	
3	207/00018/00	Screw	
4	203/00006/00	Washer	
5	209/00255/00	Out-of-Balance Switch	
6	111/00107/00	Tilt Switch Bracket	
7	206/00099/00	Bolt	
8	206/00101/00	Nut	
9	153/00045/00	Out-of-Balance Switch Plate	
10	204/00007/00	Nut	
11	205/00107/00	Bolt	
12	202/00101/00	Washer	
13	204/00009/00	Nut	

info@zipnasklade.ru
8(800)500-69-51

© Copyright, Alliance Laundry Systems LLC – DO NOT COPY or TRANSMIT

Soap Pumps

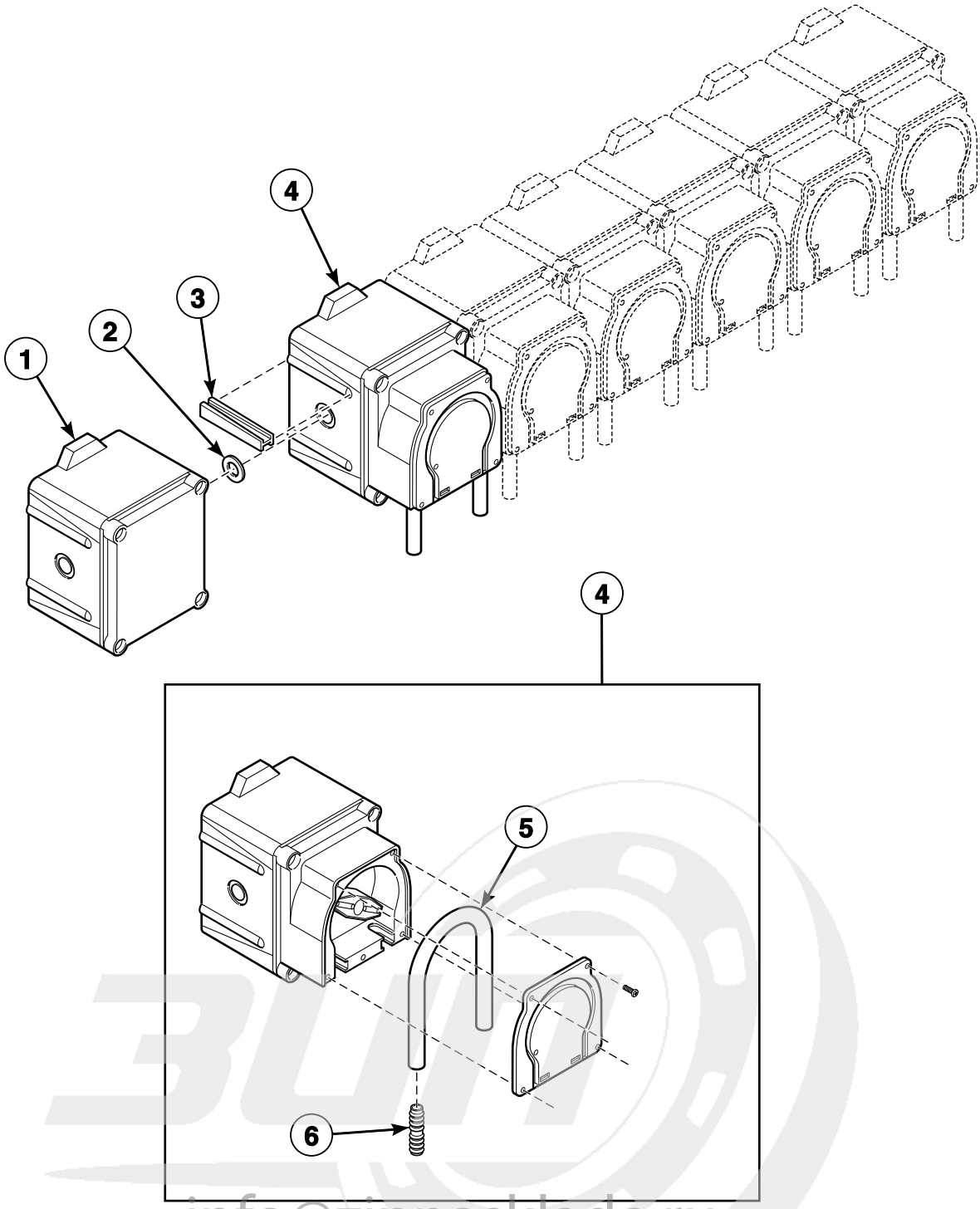

BE000499AP_9001759

info@zipnasklade.ru
8(800)500-69-51

© Copyright, Alliance Laundry Systems LLC – DO NOT COPY or TRANSMIT

Soap Pumps

REF	PART NO.	DESCRIPTION	COMMENTS
1	209/00555/01	Soap Pump Assembly	Feeding and 1 pump
	209/00555/02	Soap Pump Assembly	Feeding and 2 pumps
	209/00555/03	Soap Pump Assembly	Feeding and 3 pumps
	209/00555/04	Soap Pump Assembly	Feeding and 4 pumps
	209/00555/05	Soap Pump Assembly	Feeding and 5 pumps
	209/00555/06	Soap Pump Assembly	Feeding and 6 pumps
	209/00554/51	Feeding Liquid Soap Dosing Pump	
2	209/00554/52	Liquid Soap Dosing Pump O-Ring	
3	209/00554/53	Liquid Soap Dosing Pump Connection Piece	
4	209/00555/50	Liquid Soap Dosing Pump	
5	209/00555/98	Dosing Pump Hose	
6	209/00555/99	Dosing Pump Hose Connector	

info@zipnasklade.ru
8(800)500-69-51

© Copyright, Alliance Laundry Systems LLC – DO NOT COPY or TRANSMIT

Spray Pump

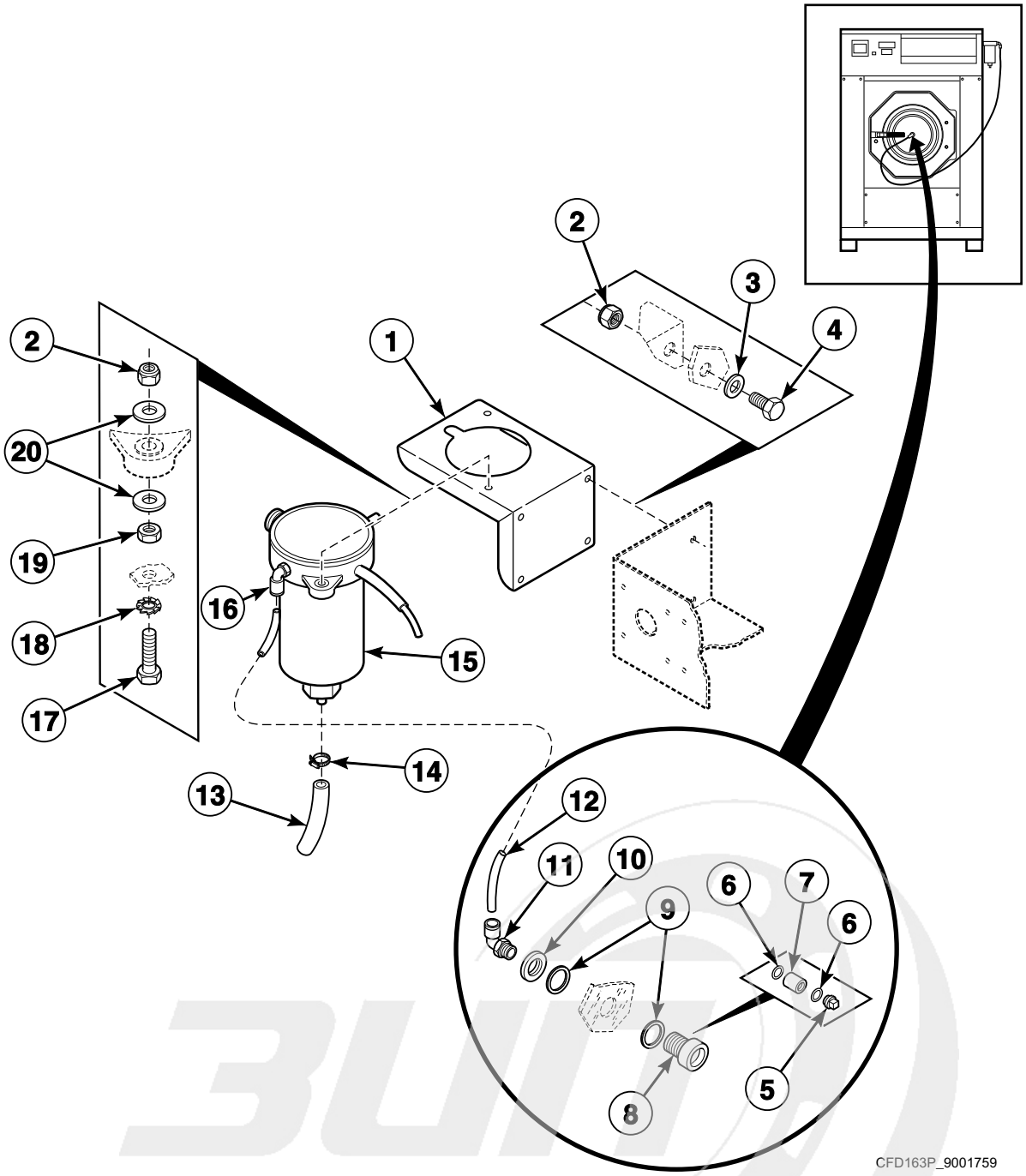

info@zipnasklade.ru
8(800)500-69-51

© Copyright, Alliance Laundry Systems LLC – DO NOT COPY or TRANSMIT

Spray Pump

REF	PART NO.	DESCRIPTION	COMMENTS
1	111/10179/00	Spray Pump Mounting Plate	
2	204/00009/00	Nut	
3	201/00007/00	Washer	
4	205/00107/00	Bolt	
5	223/00178/00	Soap Injector Orifice	
6	223/00177/00	O-Ring	
7	211/00126/00	Soap Injector Orifice Nipple	
8	211/00127/00	Soap Injector Connector	
9	223/00176/00	O-Ring	
10	211/10106/00	Nut	
11	223/00182/00	Soap Injector Coupling	
12	223/00180/00	Soap Injector Hose	
13	223/00179/10	Pressure Hose	
14	211/00088/00	Cable Tie	
15	209/00369/00	Liquid Soap Spray Pump	
16	223/00181/00	Soap Injector Elbow Coupling	
17	205/00103/00	Bolt	
18	203/00004/00	Washer	
19	204/00106/00	Nut	
20	202/00101/00	Washer	

info@zipnasklade.ru
8(800)500-69-51

© Copyright, Alliance Laundry Systems LLC – DO NOT COPY or TRANSMIT

Electric Heating Option

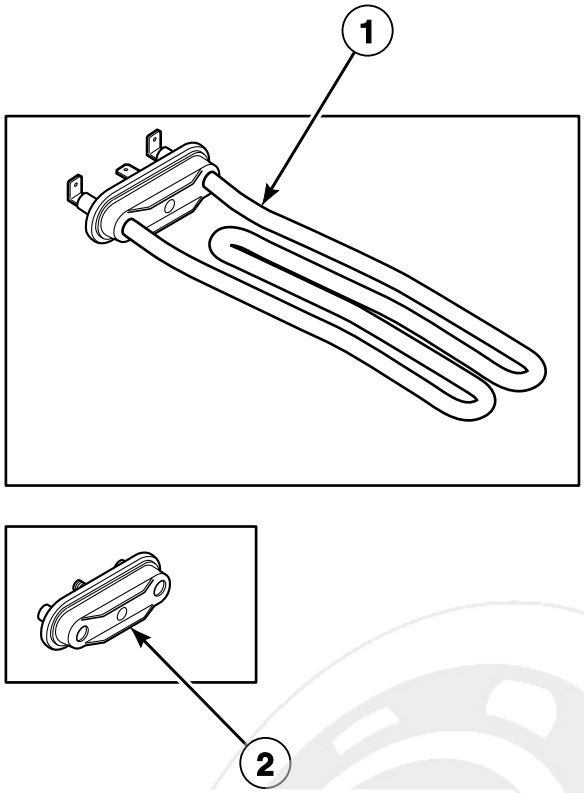

CFD84P_9001759

info@zipnasklade.ru
8(800)500-69-51

© Copyright, Alliance Laundry Systems LLC – DO NOT COPY or TRANSMIT

Electric Heating Option

REF	PART NO.	DESCRIPTION	COMMENTS
1	209/00562/20	Heating Element	3000W, 220/240 Volt
	209/00581/10	Heating Element	4000W, 380 Volt
2	209/00196/00	Heating Element Plug	

info@zipnasklade.ru
8(800)500-69-51

© Copyright, Alliance Laundry Systems LLC – DO NOT COPY or TRANSMIT

Steam Heating Option - *HF165, *HF730 and *X165 Models

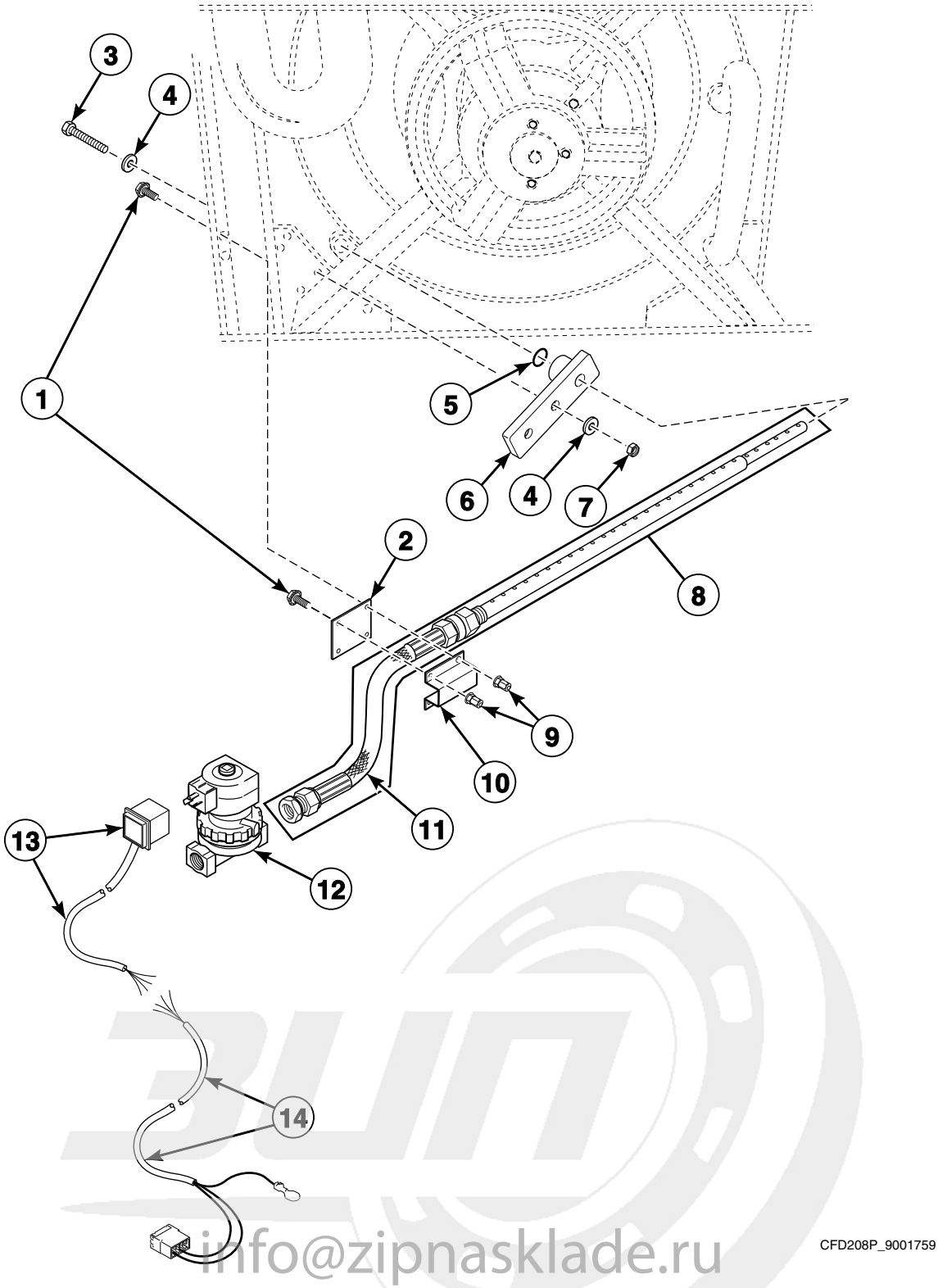

info@zipnasklade.ru
8(800)500-69-51

© Copyright, Alliance Laundry Systems LLC – DO NOT COPY or TRANSMIT

Steam Heating Option - *HF165, *HF730 and *X165 Models

REF	PART NO.	DESCRIPTION	COMMENTS
	861P3	Steam Heat Kit	Includes items 1, 2 and 8-13
1	206/00099/00	Bolt	
2	173/00018/10	Steam Injector Pipe Clamp Plate	
3	206/00091/00	Screw	Models starting 1/26/2006
4	201/00027/00	Washer	Models starting 1/26/2006
5	223/00350/00	O-Ring	Models starting 1/26/2006
6	173/00032/00	Steam Injector Bracket	Models starting 1/26/2006
7	204/00118/00	Nut	Models starting 1/26/2006
8	119/00086/00	Steam Injector	Includes item 11
9	206/00101/00	Nut	
10	173/00018/00	Steam Injector Pipe Clamp	
11	217/00033/00	Steam Hose	
12	253/10520/00	Steam Valve	
13	F605220	Steam Valve Harness	
14	210/01304/03	Main Control Heat Harness	

info@zipnasklade.ru
8(800)500-69-51

© Copyright, Alliance Laundry Systems LLC – DO NOT COPY or TRANSMIT

Steam Heating Option - *HF900 and *X200 Models

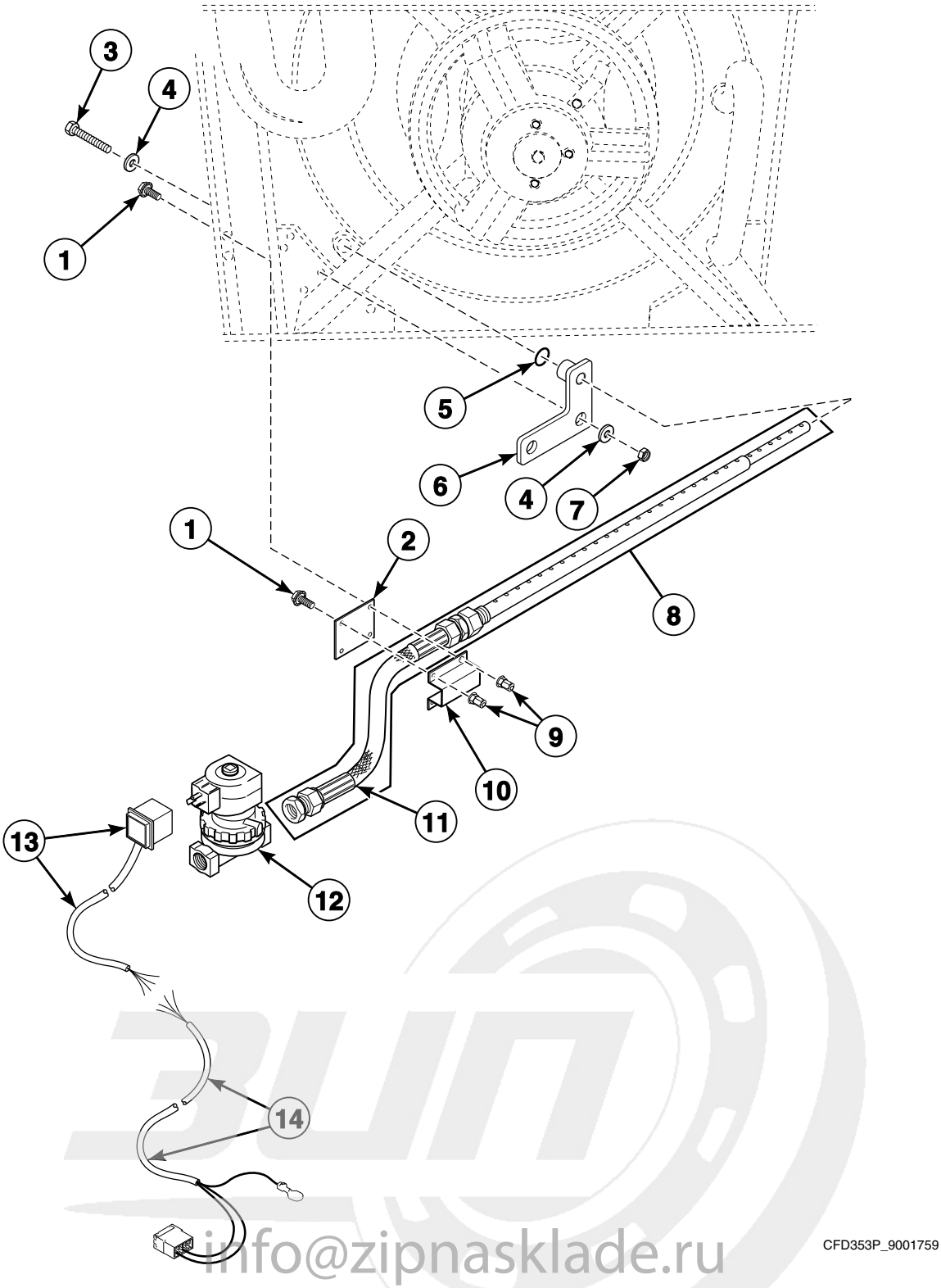

info@zipnasklade.ru
8(800)500-69-51

© Copyright, Alliance Laundry Systems LLC – DO NOT COPY or TRANSMIT

Steam Heating Option - *HF900 and *X200 Models

REF	PART NO.	DESCRIPTION	COMMENTS
	861P3	Steam Heat Kit	Includes items 1, 2 and 8-13
1	206/00099/00	Bolt	
2	173/00018/10	Steam Injector Pipe Clamp Plate	
3	206/00091/00	Screw	Models starting 1/26/2006
4	201/00027/00	Washer	Models starting 1/26/2006
5	223/00350/00	O-Ring	Models starting 1/26/2006
6	190/00032/00	Steam Injector Bracket	Models starting 1/26/2006
7	204/00118/00	Nut	Models starting 1/26/2006
8	119/00086/00	Steam Injector	Incudes item 11
9	206/00101/00	Nut	
10	173/00018/00	Steam Injector Pipe Clamp	
11	217/00033/00	Steam Hose	
12	253/10520/00	Steam Valve	
13	F605220	Steam Valve Harness	
14	210/01304/03	Main Control Heat Harness	

info@zipnasklade.ru
8(800)500-69-51

© Copyright, Alliance Laundry Systems LLC – DO NOT COPY or TRANSMIT

Notes

info@zipnasklade.ru
8(800)500-69-51

© Copyright, Alliance Laundry Systems LLC – DO NOT COPY or TRANSMIT

Parts Index

A

AC Drive Filter
209/00287/11 67

B

Basket
B12464201 29

Basket Kit
B12543501 27

Bearing
253/00164/00 ..... 19, 21, 23, 25, 27
253/00165/00 ..... 19, 21, 25

Bearing Housing
253/10505/00 ..... 15, 17, 19, 21, 25
253/10522/00 ..... 19, 25

Bearing Kit
3886P 25

Bearing Replacement Kit
895P3 19

Bearing Retainer
253/10507/00 ..... 19, 21, 25
253/10523/00 ..... 19, 21

Bearing Sleeve
253/10506/00 ..... 23, 27, 29

Bearing Spacer
B12360809 ..... 19, 21, 25
253/10513/00 ..... 19, 21, 25

Bearing Tool Kit
245/00059/00 ..... 19, 25

Belt
253/00163/00 ..... 27, 29

Blind Rivet
F8245101 39

Bolt
205/00102/00 ..... 15, 17, 19, 21, 25
205/00103/00 85
205/00104/00 ..... 59, 61, 73
205/00105/00 ..... 15, 17, 59, 71, 75
205/00107/00 ..... 81, 85
205/00108/00 67
205/00116/00 ..... 61, 63
205/00122/00 ..... 41, 43
205/00123/00 39
206/00003/00 31
206/00004/00 31
206/00009/00 33
206/00027/00 ..... 61, 63
206/00042/00 57
206/00071/00 13
206/00088/00 65
206/00099/00 ..... 15, 17, 47, 49, 51, 53, 55, 57, 59, 63, 67, 81, 89, 91
206/00122/00 ..... 15, 17
206/00147/00 ..... 27, 29
208/00132/00 43
224/00046/00 13
248/00114/00 31
253/00158/178 ..... 41, 43
253/00158/180 ..... 41, 43
253/00158/182 ..... 41, 43
253/00158/430 39
253/00158/561 41

Bushing
204/00301/00 ..... 71, 73

C

Cable Tie
211/00088/00 85

Circuit Board Cover
229/00262/00 47
229/00262/50 45
229/00289/00 ..... 49, 51, 53

Clamp
253/00019/00 75

Coil
209/00051/21 ..... 35, 37
209/00052/21 ..... 35, 37
209/00203/21 35
209/00212/11 37

Connector
209/00996/00 65

Connector to Inverter Harness
210/01064/14 67

Contact Block
44018701 45
44018901 45

Contact Switch
209/00099/26 ..... 47, 49, 51, 53

Contactor
209/00041/04 55
209/00148/02 55

Cooling Fan
209/00287/00 ..... 31, 67

Cordlock
211/00167/00 65

Counterweight
253/10504/00 ..... 15, 17

Coupling Sleeve
223/00255/00 ..... 61, 63

Cylinder and Shaft Assembly
B12402701 23
B12464301 29
B12543601 27

D

Datacard
209/02022/00 ..... 49, 51, 53

Datacard Cover
223/00348/00 ..... 49, 51, 53

Display
209/00580/03 45

Display and Printboard
209/02002/Z02 ..... 49, 51

Door
173/00028/00 41
173/00040/00 43

N/A items do not appear in index.

info@zipnasklade.ru
8(800)500-69-91

© Copyright, Alliance Laundry Systems LLC – DO NOT COPY or TRANSMIT

Door Glass
253/00515/749 41
253/00515/754 43
Door Glass Gasket
253/00515/750 41
Door Glass Seal
223/00346/00 43
Door Glass Seal Retaining Ring
173/00041/00 43
253/00515/751 41
Door Handle
253/00515/28 ..... 41, 43
Door Handle Bushing
253/00158/181 ..... 41, 43
Door Handle Hinge Weldment
253/00158/179 ..... 41, 43
Door Handle Spring Bushing
253/00158/192 ..... 41, 43
Door Handle Torsion Spring
253/00158/187 ..... 41, 43
Door Hinge
253/00515/752 ..... 41, 43
Door Hinge Block
253/00158/175 ..... 41, 43
Door Latch
253/00158/1244 39
Door Latch Assembly
253/00159/1036 39
Door Lock Assembly
C001036 39
Door Lock Catch
253/00158/185 39
Door Lock Cover
253/00158/688 39
Door Lock Harness
C000867 39
Door Lock Kit
C001036M 39
Door Lock Microswitch
253/00158/278 39
Door Lock PC-Board
209/02010/00 ..... 49, 51, 53
Door Lock Plate
253/00158/684 39
Door Lock Solenoid
209/00274/00 39
Door Lock Solenoid Bracket
253/00158/686 39
Door Lock Spring
253/00158/276 39
Door Lock Spring Cover
253/00158/687 39
Door Lock Switch Actuator
253/00158/271 39
Door Magnet Mounting Bracket
B12509001 43
Door Release Decal
253/00158/694 39
Door Seal
253/00162/02 ..... 41, 43
Dosing Pump Hose
209/00555/98 83
Dosing Pump Hose Connector
209/00555/99 83
Drain Pipe
223/00106/00 33
Drain Tub to Drain Valve Hose
223/00133/00 33
Drain Valve
209/00075/00 ..... 33, 35
209/00075/05 37
Drain Valve Handle
209/00115/11 37
Drain Valve Harness
210/01575/18 ..... 33, 35
Drain Valve Motor
209/00051/11 35
209/00052/11 35
209/00052/12 37
209/00203/11 35
209/00203/12 37
Drain Valve Motor Assembly
209/00170/06 37
Drain Valve Motor Mounting Plate
209/00025/07 35
209/00115/04 37
Drain Valve Overflow Plug
223/00086/00 33
Drain Valve Plate Assembly
114/00010/00 33
Drain Valve Shaft
209/00170/10 ..... 35, 37
Drain Valve Shaft Seal
209/00025/10 ..... 35, 37
Drain Valve Spring
209/00025/13 35
209/00170/02 37
Drain Valve to Drain Pipe Hose
223/00141/00 ..... 33, 75, 77
Drive
F8421121 69
F8421122 69
F8421123 69
F8421124 69
F8421125 69
F8421126 69

E

Elbow
223/00302/00 ..... 75, 77
Electrical Components Plate
229/00262/20 55
Electrical Connection Cover
140/00010/01 ..... 61, 63
Electrical Connection Sticker
229/00068/02 ..... 61, 63
Emergency Switch Pushbutton
209/00099/20 ..... 49, 51, 53

F

Fan Grill
209/00465/01 67

info@zipnaskladc.ru
8(800)500-69-51

N/A items do not appear in index.

© Copyright, Alliance Laundry Systems LLC – DO NOT COPY or TRANSMIT

Feeding Liquid Soap Dosing Pump
209/00554/51 83
Flat Cable
210/00204/00 45
Frame
253/10501/00 11
290/10501/00 11
Front Cabinet Top
173/00001/02 57
190/00001/02 57
Front Left Panel
173/00003/20 57
Front Panel
173/00025/00 15
173/00042/00 ..... 49, 51, 53
Front Right Panel
173/00003/10 57
Fuse
209/00372/01 ..... 45, 47
209/00468/00 65
Fuse Holder
209/00202/00 65

G

Gasket
246/00149/00 57
Grease Ring Holder
B12418101 25
Grommet
223/00174/00 67
223/00198/00 ..... 65, 67
223/00213/00 67
Ground Terminal
209/00006/01 65

H

Handle Grommet
223/00008/01 ..... 47, 71
Heating Element
209/00562/20 87
209/00581/10 87
Heating Element Plug
209/00196/00 87
Hose Barb
223/00016/00 55
Hose Clamp
223/00010/00 ..... 61, 63, 71, 73
223/00012/00 33
223/00013/00 33
223/00014/00 ..... 61, 63
223/00071/00 ..... 33, 75, 77
223/00223/00 ..... 33, 55, 75, 77
Hose Vent
223/00102/07 ..... 61, 63

I

Infrared Cable
210/00902/00 ..... 47, 49, 51, 53
Inlet Valve
253/10521/00 ..... 61, 63
253/10526/00 ..... 61, 63
Inlet Valve, 3-Way
209/00277/00 ..... 61, 63
Insulating Sticker
229/00255/00 ..... 45, 47
229/00268/00 ..... 49, 51, 53
Inverter
227/00207/00 69
227/00208/00 69
227/00213/00 69
227/00219/00 69
Inverter Box
173/00009/00 67
Inverter Box Top
173/00009/04 67
Inverter Drive Filter
227/00176/00 67
227/00182/00 67
Inverter Drive Kit
F8421021 69
F8421022 69
F8421023 69
F8421024 69
Inverter to Motor Harness
210/30570/20 67

K

Key
253/00033/00 ..... 27, 29
Keypad
209/00552/01 47

L

Leveling Leg
252/00006/00 ..... 15, 17
Lip Seal
B12379301 25
Liquid Soap Dosing Pump
209/00555/50 83
Liquid Soap Dosing Pump Connection Piece
209/00554/53 83
Liquid Soap Dosing Pump O-Ring
209/00554/52 83
Liquid Soap Manifold
173/00056/00 79
223/00249/00 ..... 65, 75, 77
Liquid Soap Spray Pump
209/00369/00 85
Lock Spring Leaf
211/00072/00 39
Logo Decal
9001890 45
Lower Front Panel
173/00004/00 57
Lower Rear Panel
173/00007/01 59
173/00007/02 59

N/A items do not appear in index.

info@zipnaskade.ru
8(800)500-69-51

© Copyright, Alliance Laundry Systems LLC – DO NOT COPY or TRANSMIT

Lower Support
253/10502/00 11
290/10502/00 11
Lubricator
212/00022/00 ..... 19, 25

M

Magnet
F8390801 43
Main Board
B12351701 47
Main Control
9002100 45
Main Control Heat Harness
210/01304/03 ..... 89, 91
Main Switch
209/00526/00 61
209/00532/00 63
Main Switch Box
173/00017/00 63
Manifold
153/00116/00 75
173/00026/00 77
Memory Card PC-Board
B12305201 ..... 49, 51, 53
Micro to Connector Harness
B12371101 67
210/01304/15 67
Motor
B12511001 31
B12511301 31
227/00174/00 31
227/00246/00 31
Motor Plate
153/00025/00 31
Motor Pulley
253/10519/00 31
Mounting Plate
173/00012/00 47
223/00374/00 ..... 49, 51, 53
Mushroom Pushbutton
209/00248/20 ..... 47, 49, 51, 53

N

Nipple
223/00254/00 ..... 61, 63
Noise Suppressor
209/00356/00 55
Nut
204/00004/00 33
204/00007/00 ..... 31, 55, 61, 63, 65, 81
204/00008/00 ..... 45, 47
204/00009/00 ..... 59, 71, 73, 81, 85
204/00012/00 ..... 13, 31
204/00016/00 13
204/00105/00 ..... 61, 63
204/00106/00 ..... 57, 59, 75, 85
204/00107/00 67
204/00109/00 57
204/00111/00 31
204/00113/00 ..... 13, 15, 17, 31
204/00114/00 ..... 31, 67
204/00116/00 ..... 45, 47, 49, 51, 53
204/00118/00 ..... 89, 91
204/00127/00 43
204/00201/00 ..... 71, 73
206/00101/00 ..... 71, 73, 81, 89, 91
211/00170/00 65
211/00172/00 ..... 63, 65
211/10106/00 85
253/00158/558 ..... 41, 43
253/00158/560 ..... 41, 43
253/00158/562 ..... 41, 43
253/00158/578 39

O

Operating Sticker
B12456701 53
225/10313/00 49
225/10427/00 53
255/10404/00 53
O-Ring
223/00176/00 85
223/00177/00 85
223/00244/00 ..... 41, 43
223/00350/00 ..... 89, 91
Out-of-Balance Detector Plate
153/00046/00 81
Out-of-Balance Switch
209/00255/00 81
Out-of-Balance Switch Boot
223/00246/00 81
Out-of-Balance Switch Plate
153/00045/00 81
Overflow Hose
223/00184/00 33
Overlay
B12568801 51
B12568901 51
F9001561 45
225/00365/00 47
225/00391/00 45
225/00392/00 45

P

Parameter Unit Assembly
227/00171/00 67
Parameter Unit Program Cable
9001895 67
Plexi Frame
225/00321/00 ..... 49, 51
225/00323/00 53
Plug
211/00087/00 65
211/00091/00 65
Plumbing Assembly
B12374201 79
B12374301 79
Pop Rivet
F431223 43
Pressure Hose
223/00179/10 ..... 65, 85

info@zipnasklade.ru
8(800)500 69-51

N/A items do not appear in index.

© Copyright, Alliance Laundry Systems LLC – DO NOT COPY or TRANSMIT

223/00333/00 55
Pressure Switch
209/00007/50 55
Pressure Switch Elbow
223/00210/00 55
Pressure Switch Hose Tee
223/00173/10 55
Prewash and Mainwash Nozzle
223/00001/04 ..... 71, 73
Printboard
209/02015/02 53
Printboard Display Plate Assembly
173/00013/20 ..... 49, 51
173/00013/30 53
Printboard Separator
211/00128/00 ..... 49, 51, 53
Printboard Support Card
111/01893/00 ..... 49, 51, 53
Programming Key
209/00326/21 45
Programming Key Contact Switch
209/00326/20 ..... 45, 47
Pulley and Hub Assembly
253/10517/00 ..... 23, 27, 29
Pushbutton
44018801 45

R

Rear Cabinet Top
173/00001/01 57
190/00001/01 57
Reducing Tee
253/00021/00 75
Reed Switch Assembly
C003000 39
Retaining Ring
212/00043/00 ..... 19, 21, 25
253/00157/00 ..... 19, 21, 25
Ribbon Assembly
B12388305 45
Rivet
B12336401 39

S

Screw
B12322501 39
B12347501 65
206/00031/00 31
206/00053/00 ..... 27, 29
206/00091/00 ..... 89, 91
206/00125/00 31
207/00003/00 31
207/00008/00 55
207/00018/00 81
207/00025/00 47
207/00031/00 67
207/00110/00 ..... 61, 63, 71
207/00113/00 ..... 47, 49, 51, 53
207/00123/00 57
207/00126/00 71
208/00121/00 57
208/00124/00 57
208/00125/00 57
209/00025/08 ..... 35, 37
209/00170/05 ..... 35, 37
209/00170/07 ..... 35, 37
253/00158/1047 39
253/00158/567 39
253/00158/612 39
253/00158/614 39
Seal
B12379001 29
B12379101 29
Seal Wear Plate
B12418301 25
Shipping Bracket
173/00015/00 11
173/00054/00 11
Shock Absorber
247/00008/00 13
Shock Absorber Bushing
211/00137/10 13
Side Panel
173/00005/00 ..... 57, 59
173/00006/00 ..... 57, 59
190/00005/00 ..... 57, 59
190/00006/00 ..... 57, 59
Side Panel Gasket
246/00079/00 59
Side Panel Support Assembly
153/00103/01 59
Soap Dispenser
153/00072/00 71
Soap Dispenser Cover
153/00070/00 71
Soap Dispenser Cover Handle
223/00008/05 71
Soap Dispenser Cover Plate
153/00071/00 71
Soap Dispenser Cup
253/00012/02 71
Soap Dispenser to Tub Hose
223/00187/00 ..... 75, 77, 79
Soap Injection PCB with Fuse
209/00218/13 65
Soap Injector Connector
211/00127/00 85
Soap Injector Coupling
223/00182/00 85
Soap Injector Elbow Coupling
223/00181/00 85
Soap Injector Hose
223/00180/00 85
Soap Injector Orifice
223/00178/00 85
Soap Injector Orifice Nipple
211/00126/00 85
Soap Pump Assembly
209/00555/01 83
209/00555/02 83
209/00555/03 83
209/00555/04 83
209/00555/05 83
209/00555/06 83

N/A items do not appear in index.

info@zipnasklade.ru
8(800)500-6

© Copyright, Alliance Laundry Systems LLC – DO NOT COPY or TRANSMIT

Spacer
211/00107/00 45
211/00140/00 45
Speed Detector
209/00400/00 ..... 19, 25
Speed Sensor Bracket
153/00041/02 19
153/00041/11 ..... 19, 25
153/10028/00 ..... 19, 25
Spray Pump Mounting Plate
111/10179/00 85
Spring
253/00158/431 39
Standoff
211/00120/00 65
211/00122/00 ..... 47, 49, 51, 53
211/00145/00 ..... 49, 51, 53
Steam Heat Kit
861P3 ..... 89, 91
Steam Hose
217/00033/00 ..... 89, 91
Steam Injector
119/00086/00 ..... 89, 91
Steam Injector Bracket
173/00032/00 89
190/00032/00 91
Steam Injector Pipe Clamp
173/00018/00 ..... 89, 91
Steam Injector Pipe Clamp Plate
173/00018/10 ..... 89, 91
Steam Valve
253/10520/00 ..... 89, 91
Steam Valve Harness
F605220 ..... 89, 91
Strain Relief
211/00169/00 ..... 63, 65
Supply Dispenser Box
223/00345/01 73
Supply Dispenser Cover
153/00089/00 73
Supply Dispenser Handle
223/00392/00 73
Suspension Spring
B12440101 13
Switch Base
209/00099/25 ..... 45, 47
Switch Bracket
153/00027/22 61
Switch Knob
209/00099/29 ..... 45, 47

T

Telem Sticker
209/00520/00 ..... 47, 49, 51, 53
Terminal Block
209/00005/00 55
209/00527/00 61
209/00528/00 61
209/00533/00 63
Thermostat
210/01064/16 55
210/01304/16 55
Thermostat Seal
225/10004/00 55
Tilt Switch Bracket
111/00107/00 81
Transformer
209/00311/00 67
209/00406/00 67
Tub
173/00019/00 ..... 15, 17
173/00020/00 ..... 15, 17
190/00019/00 17
190/00020/00 17
Tub Back Plate
173/00019/10 ..... 15, 17
173/00020/10 ..... 15, 17
Tub Front
173/00010/00 17
173/00022/00 17
Tub Gasket
255/00001/00 ..... 15, 17

U

Upper Front Panel
173/00002/00 47
173/00027/10 45
Upper Rear Panel
173/00008/00 ..... 59, 61, 63, 65, 67
Upper Support
253/10503/00 11
290/10503/00 11

V

Vent Hose
223/00107/02 75
223/00211/00 ..... 61, 63
Voltage Discharge Decal
B12355001 67
V-Ring Seal
253/00151/00 ..... 23, 27
253/00153/00 ..... 23, 27
253/10515/00 ..... 23, 27, 29
253/10516/00 ..... 23, 27
V-Ring Seal Ring
253/10518/00 ..... 23, 27, 29

W

Washer
B12300601 ..... 15, 17
B12300701 ..... 15, 17
B12522101 13
201/00001/00 ..... 15, 17, 31
201/00002/00 ..... 71, 73
201/00004/00 31
201/00007/00 ..... 39, 85
201/00008/00 31
201/00011/00 31
201/00025/00 ..... 27, 29
201/00027/00 ..... 89, 91
201/00202/00 21

info@zipnasos.ru
8(800)500-69-51

N/A items do not appear in index.

© Copyright, Alliance Laundry Systems LLC – DO NOT COPY or TRANSMIT

201/00204/00 ..... 19, 25
20290 61
202/00002/00 33
202/00004/00 ..... 47, 49, 51, 53, 61, 63, 67
202/00101/00 ..... 61, 71, 73, 81, 85
202/00102/00 ..... 61, 71
202/00105/00 ..... 15, 17
202/00106/00 57
202/00110/00 ..... 57, 59, 75
202/00121/00 ..... 61, 63
202/00139/00 63
203/00001/00 31
203/00002/00 ..... 19, 25
203/00003/00 33
203/00004/00 ..... 59, 61, 75, 85
203/00005/00 67
203/00006/00 ..... 31, 55, 61, 63, 65, 81
203/00007/00 ..... 45, 47
208/00009/00 57
209/00025/12 ..... 35, 37
223/00001/07 ..... 71, 73
223/00123/00 ..... 45, 47, 49, 51, 53
223/00272/00 ..... 61, 63
253/00158/177 ..... 41, 43
253/00158/571 39
803615 61

Water Hose
F200185 61
223/00044/00 ..... 61, 63, 71, 73
223/00269/00 ..... 75, 77

Water Level Switch
209/00029/00 55

Water Valve Adapter
223/00050/01 ..... 61, 63

Wire Harness
210/01575/17 ..... 33, 35

Y

Y Pipe
253/00017/00 77
253/00030/00 75
253/00035/00 ..... 75, 77

info@zipnasklade.ru
8(800)500-69-51

N/A items do not appear in index.

© Copyright, Alliance Laundry Systems LLC – DO NOT COPY or TRANSMIT

Notes

info@zipnasklade.ru
8(800)500-69-51

© Copyright, Alliance Laundry Systems LLC – DO NOT COPY or TRANSMIT