Drying Tumblers

50 Pound Capacity

Models Starting Serial No. 0904004427

Refer to Page 5 for Model Numbers

Parts

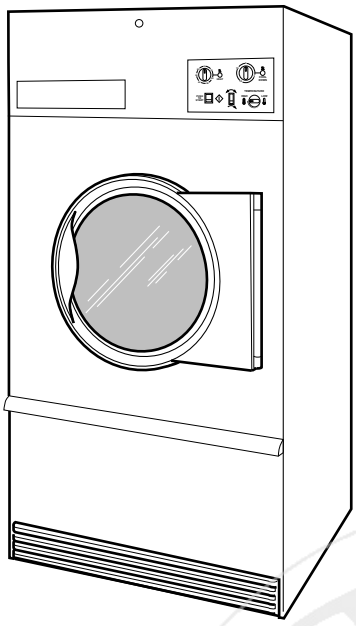

TMB795C_70421801

info@zipnasklade.ru
8(800)500-69-51

Alliance Laundry Systems

www.alliancelaundry.com

Part No. 70421801R12
October 2013

info@zipnasklade.ru
8(800)500-69-51

Table of Contents

Title	Page
Parts Ordering Information	3
Serial Plate Location	3
Model Identification	5
Product Overview - Heat Source and Voltage	6
Product Overview - Control Suffixes (Drawing 1 of 3)	8
Product Overview - Control Suffixes (Drawing 2 of 3)	10
Product Overview - Control Suffixes (Drawing 3 of 3)	12
Control Box	14
Fire Suppression System Control Box	16
Single Drop Controls	18
Dual Digital Timer Controls	20
DMP Control	22
DX4 Electronic Control	24
OPL Microprocessor Controls	26
Coin Drop Components for MDC Models	28
Central Pay and Card Reader MDC Models	30
Optional Card Reader Mountings for MDC Models	32
Coin Drops	34
Coin Drop Kits	36
Coin Drop Components for Quantum Control	38
Card Reader Components for Quantum Control	40
Network Board for Quantum Control	42
Network Connection for Quantum	44
Coin Drop Components for Galaxy 600 Control	46
Card Reader Components for Galaxy 600 Control	48
UniLinc Control	50
LED OPL Control	52
Emergency Stop Button - CE Models	54
Cabinet Front Components	56
Cabinet Panels and Nameplates	58
Front Panel Assemblies	60
Lint Panel Switch Assembly	62
Lower Cabinet Front Components	64
Cabinet Limit and Thermistor Assembly	66
Cabinet Components	68
Door and Hinge Components	70
Cylinder and Trunnion Components	72
Bearing Components	74
Reversing Cylinder Drive Motor and Components	76
Drive Components for Non-Moisture Sensing Reversing Models Through 1/31/12	78
Drive Components for Moisture Sensing Reversing Models Starting 8/1/11 and Non-Moisture Sensing Reversing	

info@zippasklade.ru
8(800)500-69-51

© Copyright 2013, Alliance Laundry Systems LLC

All rights reserved. No part of the contents of this book may be reproduced or transmitted in any form or by any means without the expressed written consent of the publisher.

Models Starting 2/1/12 80
Drive Components for Nonreversing Models Through 7/31/11 82
Drive Components for Nonreversing Models Starting 8/1/11 84
Idler Housing Assembly for Non-Moisture Sensing Reversing Models Through 1/31/12 86
Idler Assembly for Nonreversing Models Through 7/31/11 88
Moisture Sensing Components 90
Fan Components 92
Fan Motors 94
Gas Heater Components 96
Burner Orifices for Non-CE Models 98
Electric Heater Components 100
Airflow Switch Assembly 102
Steam Heater and Valve 104
Rotation Sensor 106
Duct and Damper Assembly 108
Rear Panel Assembly 110
Control Tray Wrap Components 112
Control Tray Fuses 114
Control Tray Harnesses for Gas and Steam Models 116
Control Tray Components for Gas Models 118
Control Tray Components for Steam Models 120
Control Tray Harnesses for Electric Models 122
Control Tray Components for Non-CE Electric Models 124
Control Tray Components for CE Electric Models 126
Parts Index 129

info@zipnasklade.ru
8(800)500-69-51

© Copyright, Alliance Laundry Systems LLC – DO NOT COPY or TRANSMIT

Parts Ordering Information

If literature or replacement parts are required, contact the source from whom the machine was purchased or contact Alliance Laundry Systems at (920) 748-3950 for the name and address of the nearest authorized parts distributor.

For technical assistance, call either of the numbers listed below:

(920) 748-3121 Ripon, Wisconsin

+32 56 41 20 54 Wevelgem, Belgium

Serial Plate Location

When calling or writing about your product, be sure to mention model and serial numbers. Model and serial numbers are located on serial plate(s) as shown.

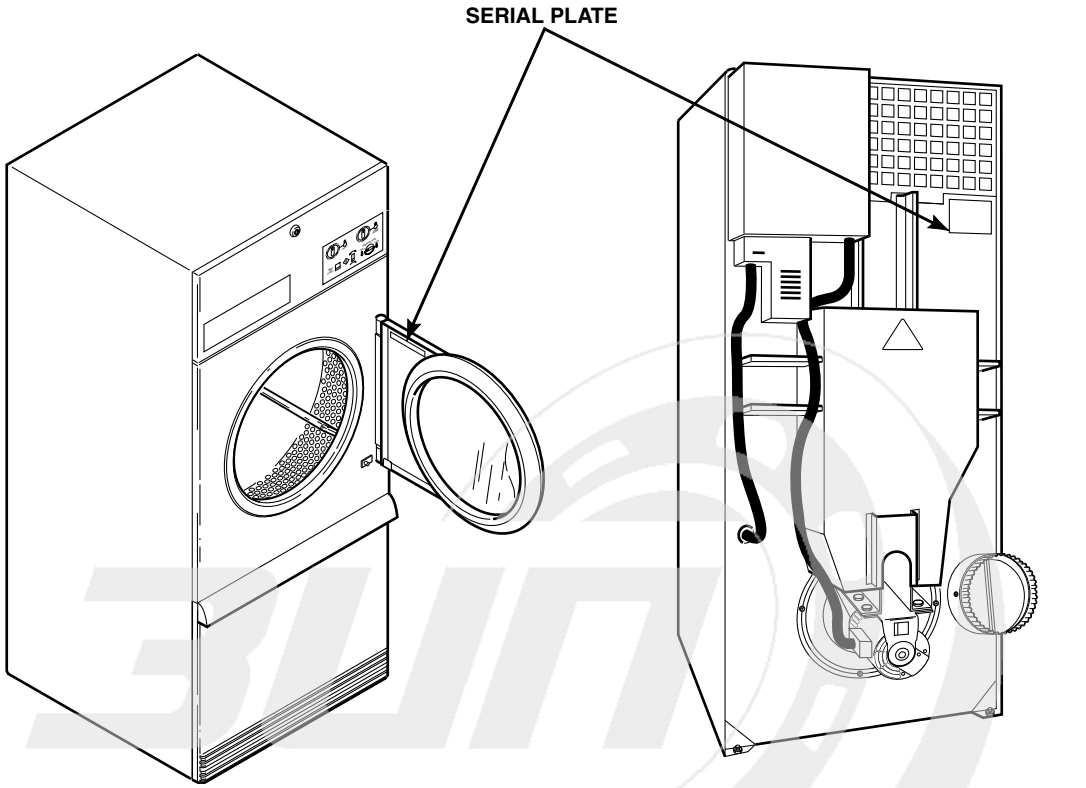

info@zipnasklade.ru
8(800)500-69-51

© Copyright, Alliance Laundry Systems LLC – DO NOT COPY or TRANSMIT

Notes

info@zipnasklade.ru
8(800)500-69-51

© Copyright, Alliance Laundry Systems LLC – DO NOT COPY or TRANSMIT

Model Identification

Information in this manual is applicable to these tumbler models:

CA050L
CA050N
CK050N
CT050E
CT050L
CT050N
CT050S
CT050T
CU050E
CU050L
CU050N
CU050S
CU050T
DR50E2-BT050E
DR50E2-BU050E
DR50G2-BA050L
DR50G2-BA050N
DR50G2-BK050N
DR50G2-BT050D
DR50G2-BT050L
DR50G2-BT050N
DR50G2-BU050L
DR50G2-BU050N
DR50S2-BT050S
DR50S2-BT050T
DR50S2-BU050S
DR50S2-BU050T
DR55E2-BT050E
DR55E2-BU050E
DR55G2-BA050L
DR55G2-BA050N
DR55G2-BT050D
DR55G2-BT050L
DR55G2-BT050N
DR55S2-BT050S
DR55S2-BT050T
DR55G2-BU050L
DR55G2-BU050N
DR55S2-BU050S
DR55S2-BU050T

GA050L
GA050N
GK050N
GT050E
GT050L
GT050N
GT050S
GT050T
GU050E
GU050L
GU050N
GU050S
GU050T
HA050L
HA050N
HK050N
HT050D
HT050E
HT050L
HT050N
HT050S
HT050T
HU050E
HU050L
HU050N
HU050S
HU050T
IPD50E2
IPD50G2
IPD50S2
IT050E
IT050L
IT050N
IT050S
IT050T

KA050L
KA050N
KK050N
KT050E
KT050L
KT050N
KT050S
KT050T
KU050E
KU050L
KU050N
KU050S
KU050T
LA050L
LA050N
LK050N
LT050E
LT050L
LT050N
LT050S
LT050T
LU050E
LU050L
LU050N
LU050S
LU050T
PA050L
PA050N
PK050N
PT050E
PT050L
PT050N
PT050S
PT050T
PU050E
PU050L
PU050N
PU050S
PU050T

SA050L
SA050N
SK050N
ST050D
ST050E
ST050L
ST050N
ST050S
ST050T
SU050E
SU050L
SU050N
SU050S
SU050T
UA050L
UA050N
UK050N
UT050E
UT050L
UT050N
UT050S
UT050T
UU050E
UU050L
UU050N
UU050S
UU050T
YT050E
YT050L
YT050N
YT050S
YT050T
YU050E
YU050L
YU050N
YU050S
YU050T

info@zipnasklade.ru
8(800)500-69-51

© Copyright, Alliance Laundry Systems LLC – DO NOT COPY or TRANSMIT

Product Overview - Heat Source and Voltage

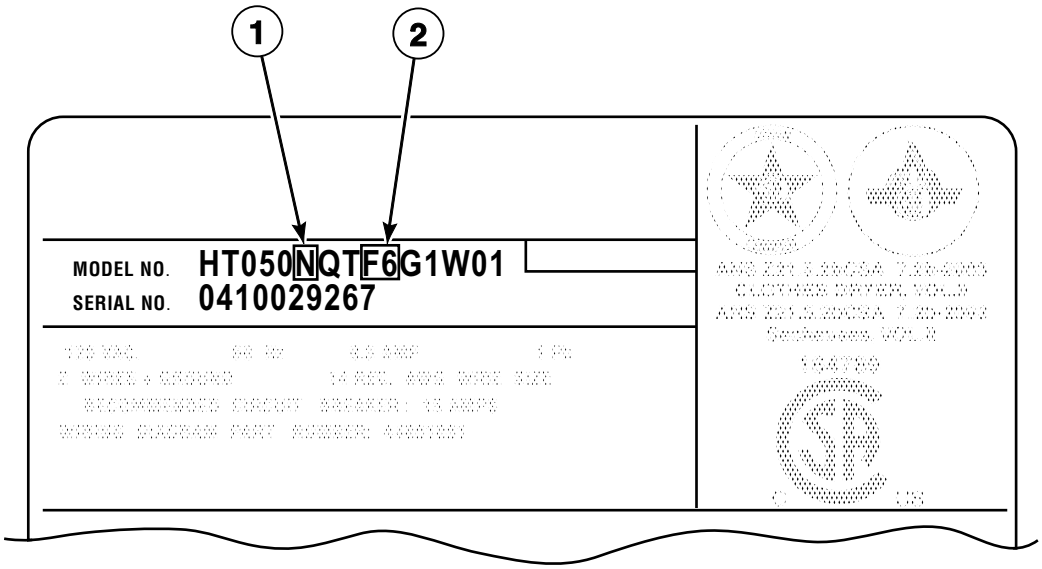

TMB2730P_70421801

info@zipnasklade.ru
8(800)500-69-51

© Copyright, Alliance Laundry Systems LLC – DO NOT COPY or TRANSMIT

Product Overview - Heat Source and Voltage

REF	PART NO.	DESCRIPTION	COMMENTS
1	-	Heat Source	D: Liquid Petroleum Gas (L.P.) E: Electric L: Liquid Petroleum Gas (L.P.) N: Natural Gas (N.G.) S: Steam T: Thermal Oil
2	-	Voltage	B1: 120 Volt/60 Hertz/1 Phase F3: 200-208 or 240 Volt/60 Hertz/1 Phase F4: 200 Volt/50 Hertz/3 Phase F5: 200-208 Volt/60 Hertz/3 Phase F6: 200-208 or 240 Volt/60 Hertz/3 Phase J1: 230 Volt/50 Hertz/1 Phase J2: 230-240 Volt/50 Hertz/1 Phase J3: 240 Volt/50 Hertz/1 Phase J5: 230 Volt/50 Hertz/3 Phase J6: 230-240 Volt/50 Hertz/3 Phase J7: 240 Volt/50 Hertz/3 Phase J8: 240 Volt/60 Hertz/3 Phase M1: 380 Volt/50 Hertz/3 Phase M2: 380 or 400-415 Volt/50 Hertz/3 Phase M3: 380 Volt/60 Hertz/3 Phase N1: 400-415 Volt/50 Hertz/3 Phase P1: 440 Volt/60 Hertz/3 Phase Q1: 460-480 Volt/60 Hertz/3 Phase Q2: 480 Volt/60 Hertz/3 Phase

info@zipnasklade.ru
8(800)500-69-51

© Copyright, Alliance Laundry Systems LLC – DO NOT COPY or TRANSMIT

Product Overview - Control Suffixes (Drawing 1 of 3)

All Models Except G and K Models

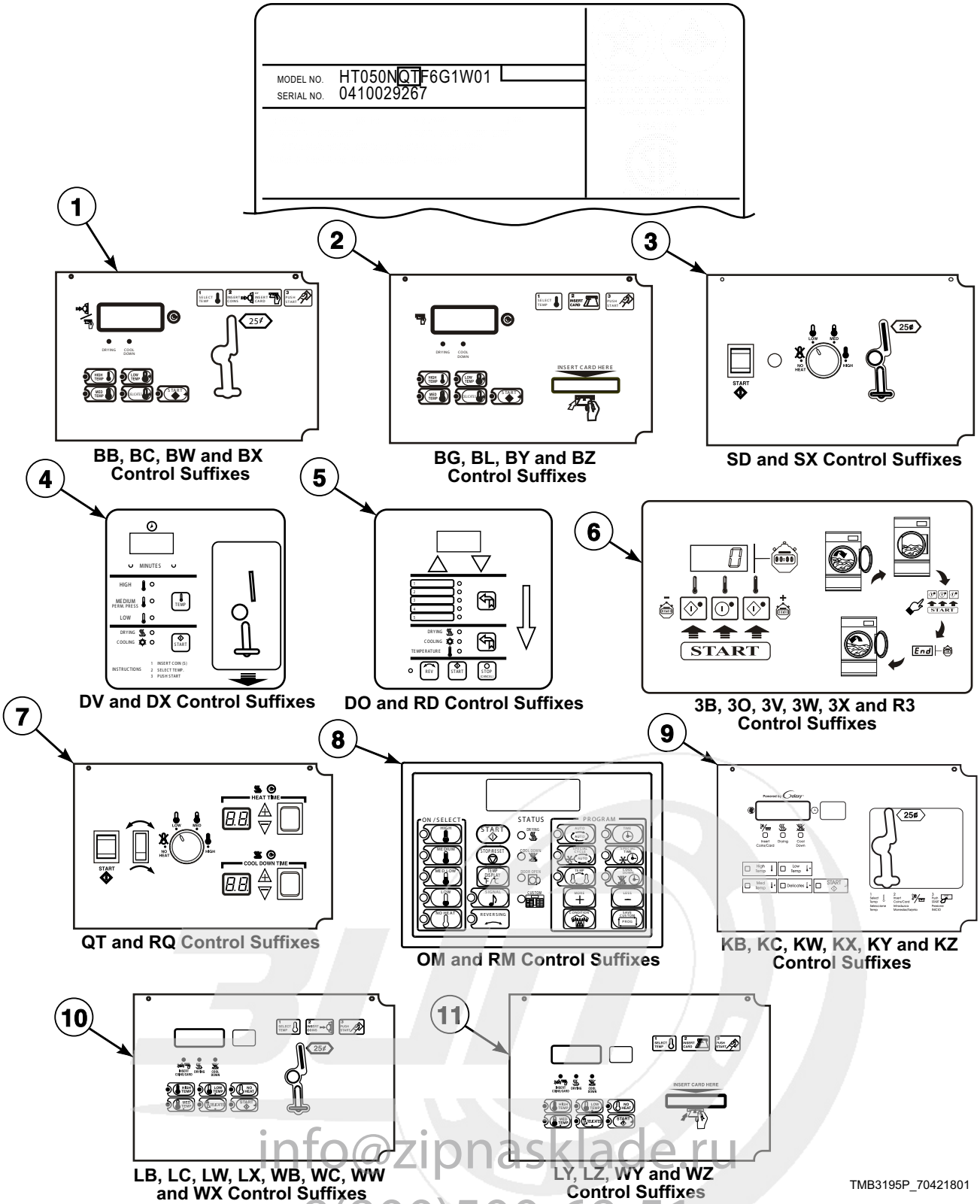

info@zipnasklade.ru
8(800)500-69-51

© Copyright, Alliance Laundry Systems LLC – DO NOT COPY or TRANSMIT

Product Overview - Control Suffixes (Drawing 1 of 3)

REF	PART NO.	DESCRIPTION	COMMENTS
1	-	Control - Nonreversing	BC: basic electronic, coin BX: basic electronic, prep for coin
	-	Control - Reversing	BB: reversing basic electronic, coin BW: reversing basic electronic, prep for coin
2	-	Control - Nonreversing	BG: basic electronic, OPL mode BL: basic electronic, central pay BY: basic electronic, prep for card
	-	Control - Reversing	BZ: reversing basic electronic, prep for card
3	-	Control - Nonreversing	SD: single drop SX: single drop, prep for coin
4	-	Control - Nonreversing	DV: DMP vended DX: DMP prep for coin
5	-	Control - Nonreversing	DO: DMP OPL
	-	Control - Reversing	RD: reversing DMP OPL
6	-	Control - Nonreversing	3O: DX4 OPL 3V: DX4 vended 3X: DX4 prep for coin
	-	Control - Reversing	3B: reversing DX4 vended 3W: reversing DX4 prep for coin R3: reversing DX4 OPL
7	-	Control - Nonreversing	QT: dual digital timer
	-	Control - Reversing	RQ: reversing dual digital timer
8	-	Control - Nonreversing	OM: OPL micro
	-	Control - Reversing	RM: reversing OPL micro
9	-	Control - Nonreversing	KC: single coin KX: prep for coin KY: prep for card
	-	Control - Reversing	KB: reversing single coin KW: reversing prep for coin KZ: reversing prep for card
10	-	Control - Nonreversing	LC: network adaptable coin LX: network adaptable, prep for coin WC: network ready coin WX: network ready, prep for coin
	-	Control - Reversing	LB: reversing network adaptable coin LW: reversing network adaptable, prep for coin WB: reversing network ready coin WW: reversing network ready, prep for coin
11	-	Control - Nonreversing	LY: network adaptable, prep for card WY: network ready, prep for card
	-	Control - Reversing	LZ: reversing network adaptable, prep for card WZ: reversing network ready, prep for card

NOTE: Coin models have the following control suffixes: 3B, 3V, 3W, 3X, BB, BC, BW, BX, DV, DX, KB, KC, KW, KX, KY, KZ, LB, LC, LW, LX, SD, SX, WB, WC, WW and WX.

NOTE: OPL models have the following control suffixes: 3O, BG, BL, BY, BZ, DO, LY, LZ, OM, QT, R3, RD, RM, RQ, WY and WZ.

info@zipnasklade.ru
8(800)500-69-51

© Copyright, Alliance Laundry Systems LLC – DO NOT COPY or TRANSMIT

Product Overview - Control Suffixes (Drawing 2 of 3)

All Models Except G and K Models

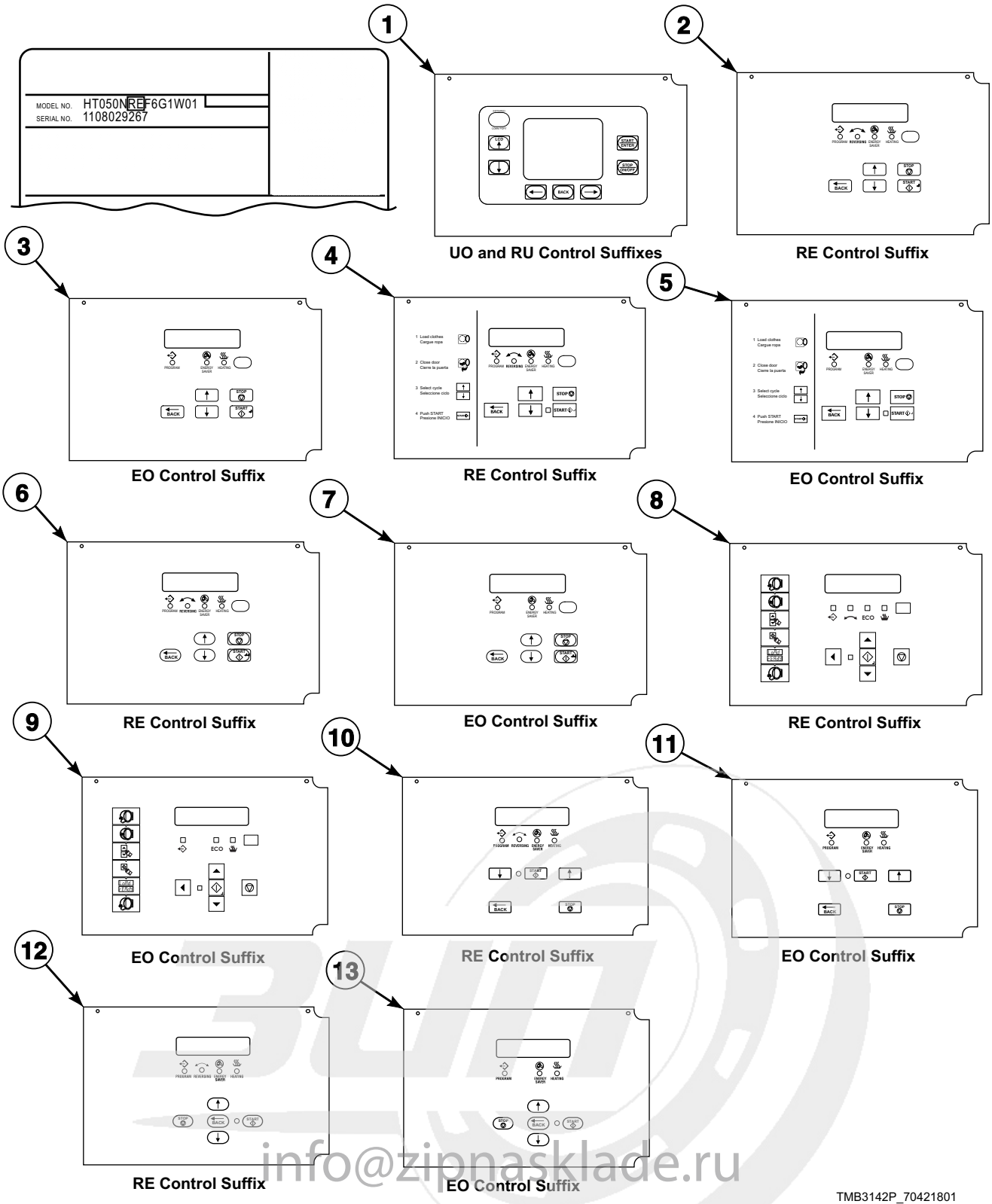

TMB3142P_70421801

info@zipnasklade.ru
8(800)500-69-51

© Copyright, Alliance Laundry Systems LLC – DO NOT COPY or TRANSMIT

Product Overview - Control Suffixes (Drawing 2 of 3)

REF	PART NO.	DESCRIPTION	COMMENTS
1	-	Control - Reversing	U models; RU: reversing UniLinc OPL
	-	Control - Nonreversing	U models; UO: UniLinc OPL
2	-	Control - Reversing	S models; RE: reversing LED OPL
3	-	Control - Nonreversing	S models; EO: LED OPL
4	-	Control - Reversing	H models; RE: reversing LED OPL
5	-	Control - Nonreversing	H models; EO: LED OPL
6	-	Control - Reversing	U models; RE: reversing LED OPL
7	-	Control - Nonreversing	U models; EO: LED OPL
8	-	Control - Reversing	C, D and I models; RE: reversing LED OPL
9	-	Control - Nonreversing	C, D and I models; EO: LED OPL
10	-	Control - Reversing	P models; RE: reversing LED OPL
11	-	Control - Nonreversing	P models; EO: LED OPL
12	-	Control - Reversing	L and Y models; RE: reversing LED OPL
13	-	Control - Nonreversing	L and Y models; EO: LED OPL

NOTE: OPL models have the following control suffixes: EO, RE, RU and UO.

info@zipnasklade.ru
8(800)500-69-51

© Copyright, Alliance Laundry Systems LLC – DO NOT COPY or TRANSMIT

Product Overview - Control Suffixes (Drawing 3 of 3)

G and K Models

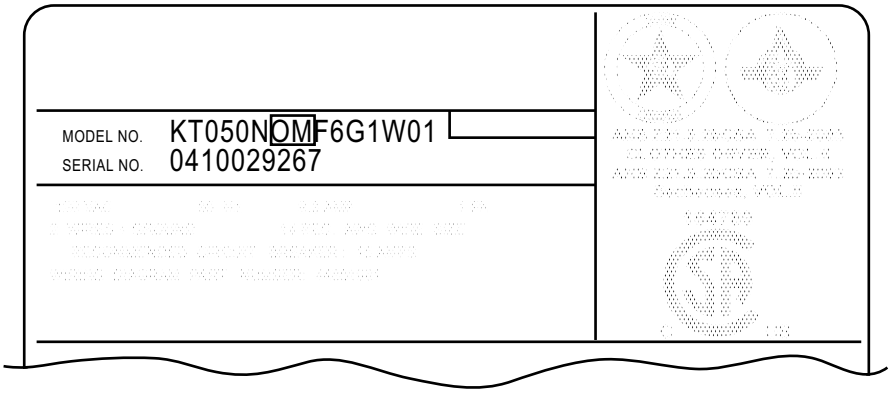

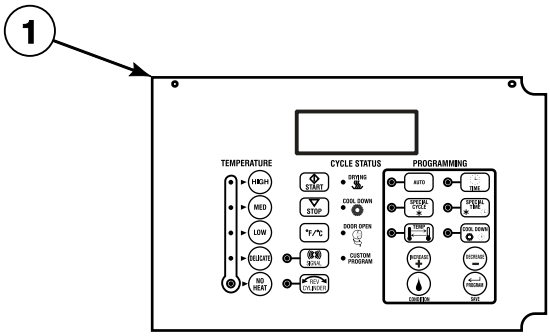

OM and RM Control Suffixes

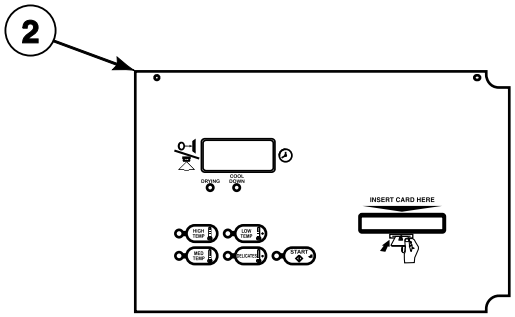

BG and BL Control Suffixes

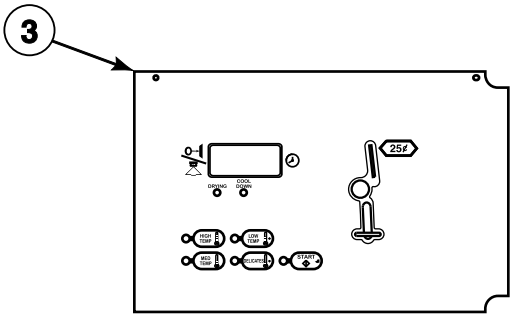

BB, BC, BW and BX Control Suffixes

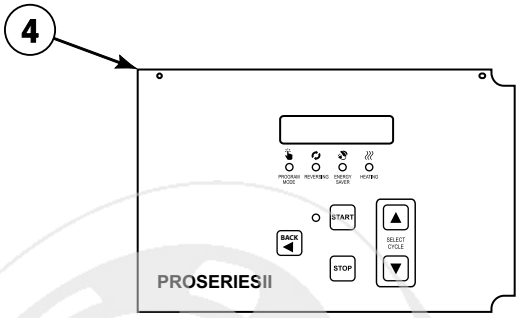

RE Control Suffix

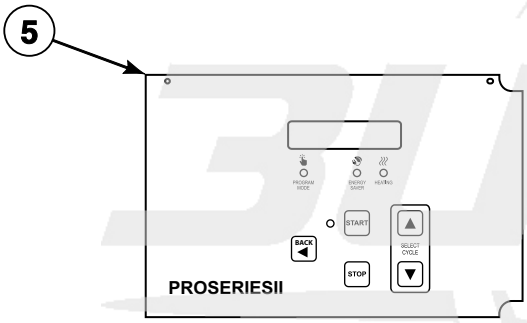

EO Control Suffix

TMB3196P_70421801

info@zipnasklade.ru
8(800)500-69-51

© Copyright, Alliance Laundry Systems LLC – DO NOT COPY or TRANSMIT

Product Overview - Control Suffixes (Drawing 3 of 3)

REF	PART NO.	DESCRIPTION	COMMENTS
1	-	Control - Nonreversing	OM: OPL micro
	-	Control - Reversing	RM: reversing OPL micro
2	-	Control - Nonreversing	BG: basic electronic, OPL mode BL: basic electronic, central pay
3	-	Control - Nonreversing	BC: basic electronic, coin BX: basic electronic, prep for coin
	-	Control - Reversing	BB: reversing basic electronic, coin BW: reversing basic electronic, prep for coin
4	-	Control - Reversing	RE: reversing LED OPL
5	-	Control - Nonreversing	EO: LED OPL

NOTE: Coin models have the following control suffixes: BB, BC, BW and BX

NOTE: OPL models have the following control suffixes: BG, BL, EO, OM, RE and RM.

info@zipnasklade.ru
8(800)500-69-51

© Copyright, Alliance Laundry Systems LLC – DO NOT COPY or TRANSMIT

Control Box

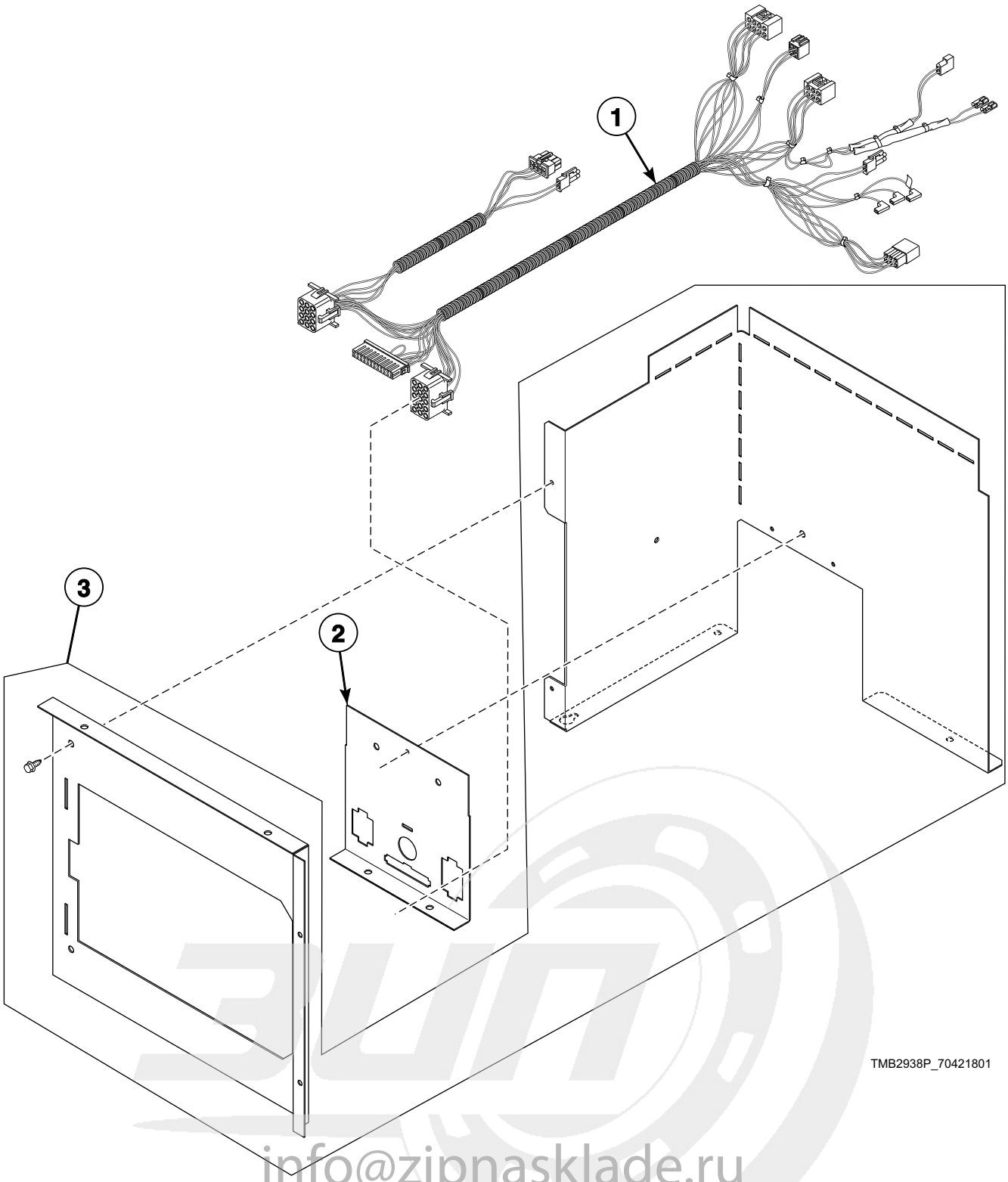

info@zipnasklade.ru
8(800)500-69-51

© Copyright, Alliance Laundry Systems LLC – DO NOT COPY or TRANSMIT

Control Box

REF	PART NO.	DESCRIPTION	COMMENTS
1	44137401P	Main Harness	Models through 7/31/11
	44187001	Main Harness	Models starting 8/1/11
2	70307002	Control Housing Cover	WC, WX and WY control suffixes
	70307001	Control Housing Cover	All other control suffixes
3	44180101	Control Box Assembly	

info@zipnasklade.ru
8(800)500-69-51

© Copyright, Alliance Laundry Systems LLC – DO NOT COPY or TRANSMIT

Fire Suppression System Control Box

C, D, G, H, I, K, L, P, S and U Gas and Steam Models
Models Through 7/31/11 with a F, K, L, N, T, U or W in the 11th Character (ST050NLCF6K1W01)
Models Starting 8/1/11 with a C, D or Y in the 11th Character

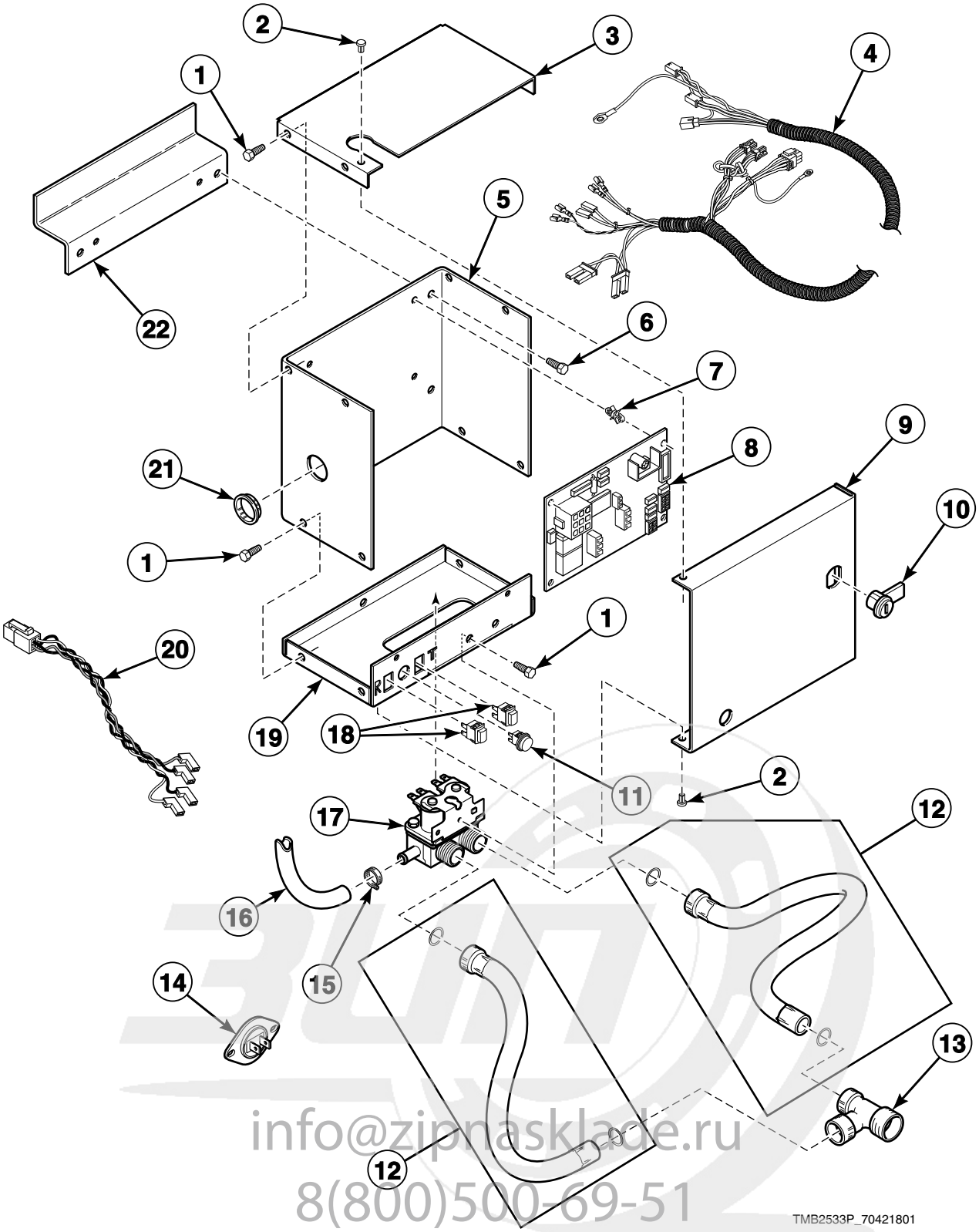

info@zipnasklade.ru
8(800)500-69-51

© Copyright, Alliance Laundry Systems LLC – DO NOT COPY or TRANSMIT

Fire Suppression System Control Box

REF	PART NO.	DESCRIPTION	COMMENTS
	44073601	Manifold	
1	430497	Screw	
2	M400713	Drive Rivet	
3	44065401	Control Box Top	
4	44141601P	Control Harness Assembly	
5	44065101	Control Box Housing	
6	51780	Screw	
7	501523	Circuit Board Support	4 required
8	44063801P	Control	
9	44065201	Control Box Cover	
10	44089301P	Lock, Key and Nut Kit	RL001 key code; Optional if same key is to be used for control lock
	70155601	Key	RL001
11	801432	Light	
12	F200116	Water Hose	2 required; Non-CE and non-Australian models
	38349P	Fill Hose Kit	CE and Australian models
13	44069101	Hose Fitting	Non-CE and non-Australian models
14	44064701	Thermistor	2 required
15	36801	Hose Clamp	
16	44073301	Hose	39 inches; Outlet hose
17	36958P	Mixing Valve	
18	801434W	Push-to-Start Switch	2 required
19	44065301	Control Box Base	
20	44141701P	Sensor Harness Assembly	
21	70178701	Snap Bushing	
22	44065901	Bracket	For mounting fire suppression system box to machine

info@zipnasklade.ru
8(800)500-69-51

© Copyright, Alliance Laundry Systems LLC – DO NOT COPY or TRANSMIT

Single Drop Controls

C, H, I and S Models Except Models HT050D, ST050D and Thermal Oil Models
Models with SD and SX Control Suffixes

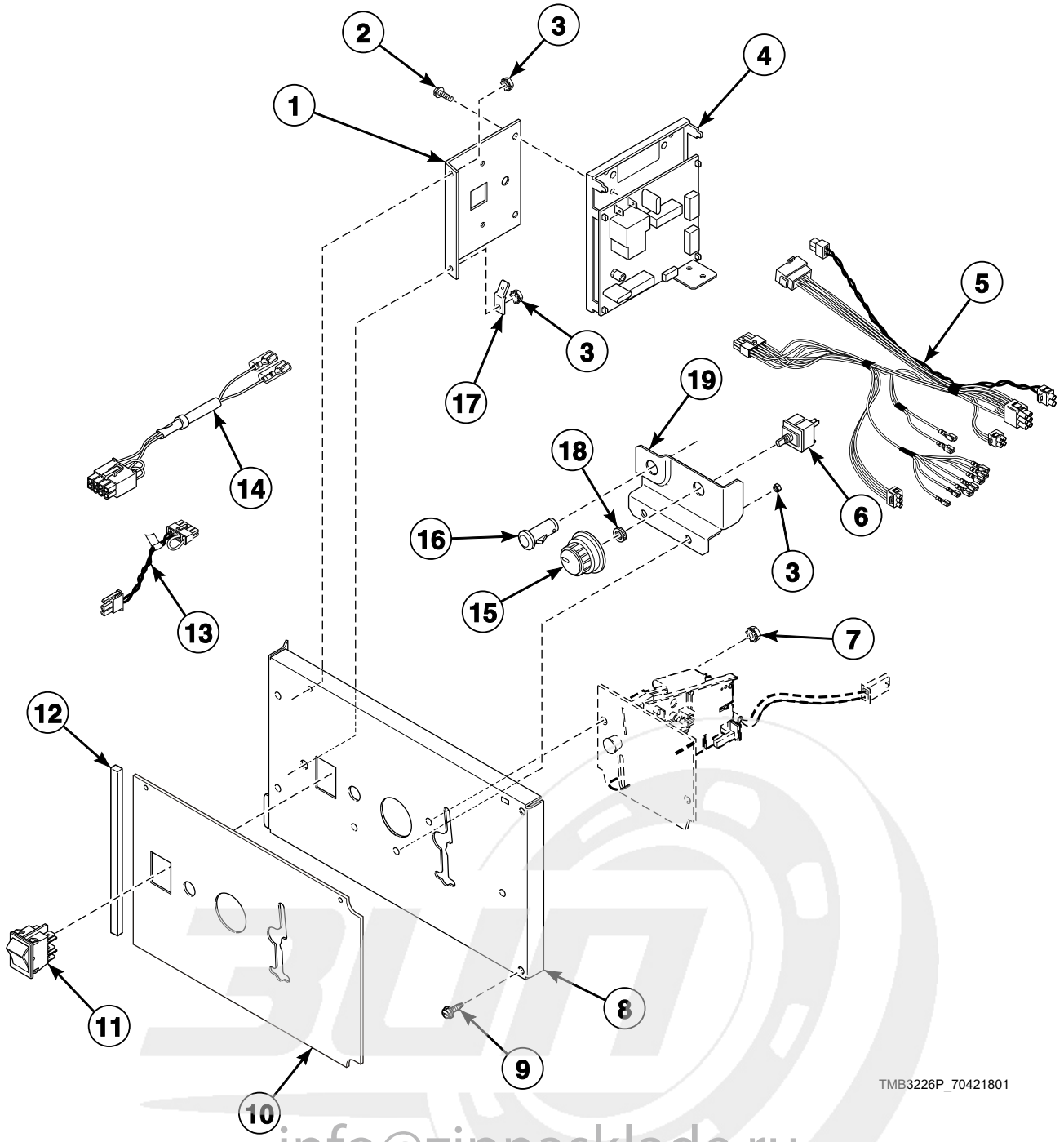

info@zipnasklade.ru
8(800)500-69-51

© Copyright, Alliance Laundry Systems LLC – DO NOT COPY or TRANSMIT

Single Drop Controls

REF	PART NO.	DESCRIPTION	COMMENTS
1	70357901	Control Chassis Mounting Bracket	
2	501524	Screw	
3	70054	Nut	
4	513139P	Control Assembly	
5	70369001	Control Panel Harness	Non-CE and non-Australian models
	70398401	Control Panel Harness	CE and Australian models
6	511711	Temperature Selector Switch	
7	29786	Nut	
8	70363401	Control Door Assembly	
9	70069901	Screw	
10	70362901	Overlay	C, I and S models
	70363001	Overlay	H models
11	70455101	Rocker Switch	Start switch
12	70414101	Foam Gasket	
13	70324604	Jumper Calibration Wire	
14	70364104P	Coin Vault Switch Harness	Non-CE models
15	44104601	Temperature Knob	
16	801431	Light	
17	00177	Male Tab Terminal	
18	24205	Nut	
19	70350201	Temperature Selector Bracket	

info@zipnasklade.ru
8(800)500-69-51

© Copyright, Alliance Laundry Systems LLC – DO NOT COPY or TRANSMIT

Dual Digital Timer Controls

C, H, I, L, P, S, U and Y Models
G and K Models Starting 1/16/12
Models with QT and RQ Control Suffixes

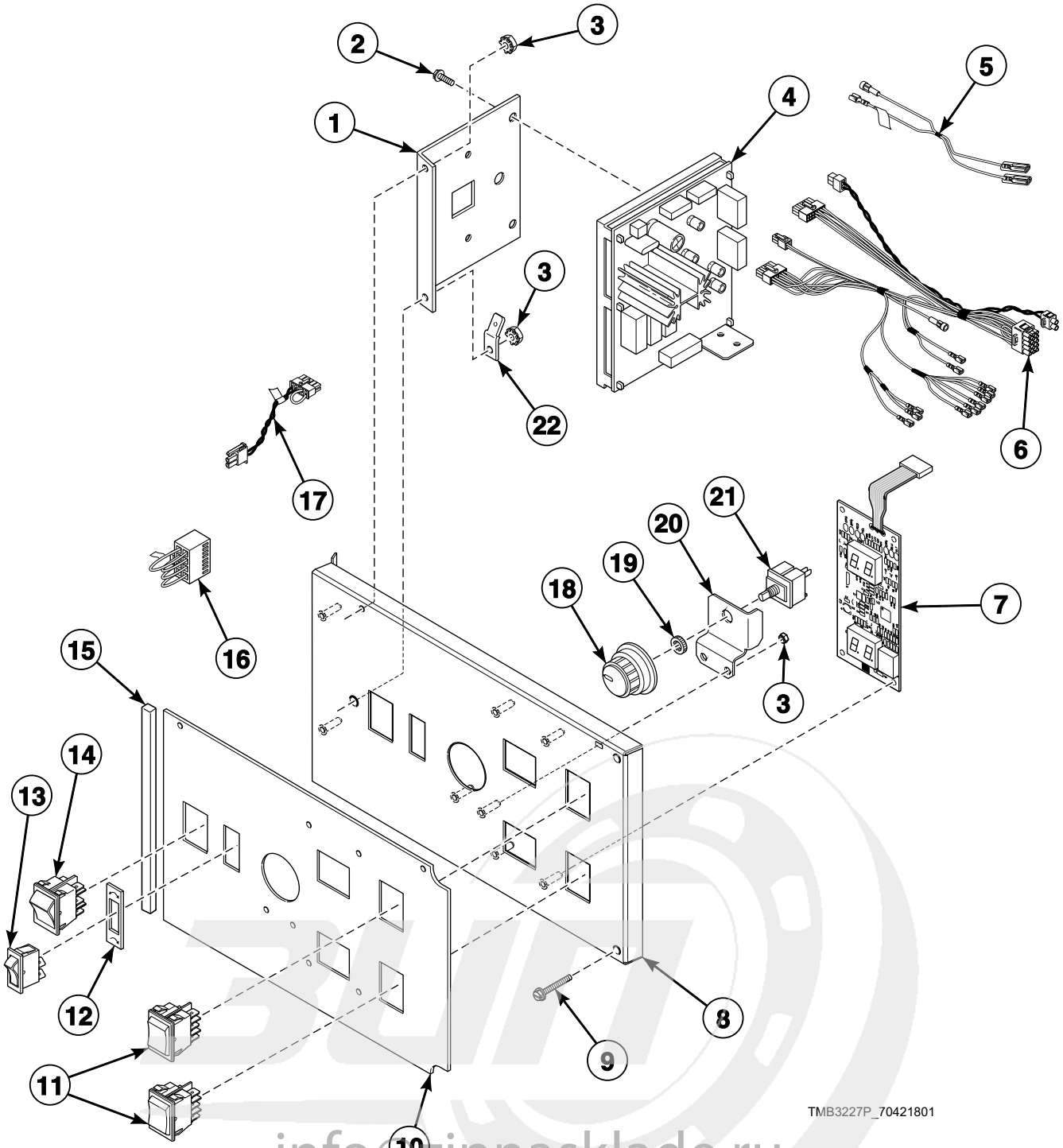

info@zipnasklade.ru
8(800)500-69-51

© Copyright, Alliance Laundry Systems LLC – DO NOT COPY or TRANSMIT

Dual Digital Timer Controls

REF	PART NO.	DESCRIPTION	COMMENTS
1	70357901	Control Chassis Mounting Bracket	
2	501524	Screw	
3	70054	Nut	
4	512202P	Control Assembly	
5	44100101P	Control Harness	Reversing; Use in addition to item 6
6	70367001P	Control Panel Harness	
7	512218P	Display Assembly	
8	70360601	Control Plate Assembly	
9	70069901	Screw	
10	70362201	Overlay	C, G, I, K, L, S, U and Y models; Nonreversing
	70362202	Overlay	C, G, I, K, L, S, U and Y models; Reversing
	70362501	Overlay	H models; Nonreversing
	70362502	Overlay	H models; Reversing
	70362401	Overlay	P models; Nonreversing
	70362402	Overlay	P models; Reversing
11	70461301	Rocker Switch	
12	M413236	Switch Plate	Reversing
13	44099601	Rocker Switch	Reversing
14	70455101	Rocker Switch	Start switch
15	70414101	Foam Gasket	
16	70364103	Bypass Harness	Non-CE models
17	70324604	Jumper Calibration Wire	
18	44104601	Temperature Knob	
19	24205	Nut	
20	70391701	Temperature Selector Switch Bracket	
21	511711	Temperature Selector Switch	
22	00177	Male Tab Terminal	

info@zipnasklade.ru
8(800)500-69-51

© Copyright, Alliance Laundry Systems LLC – DO NOT COPY or TRANSMIT

DMP Control

C and I Models
Models with DO, DV, DX and RD Control Suffixes
Coin Models Through 4/1/10; OPL Models Through 7/31/11

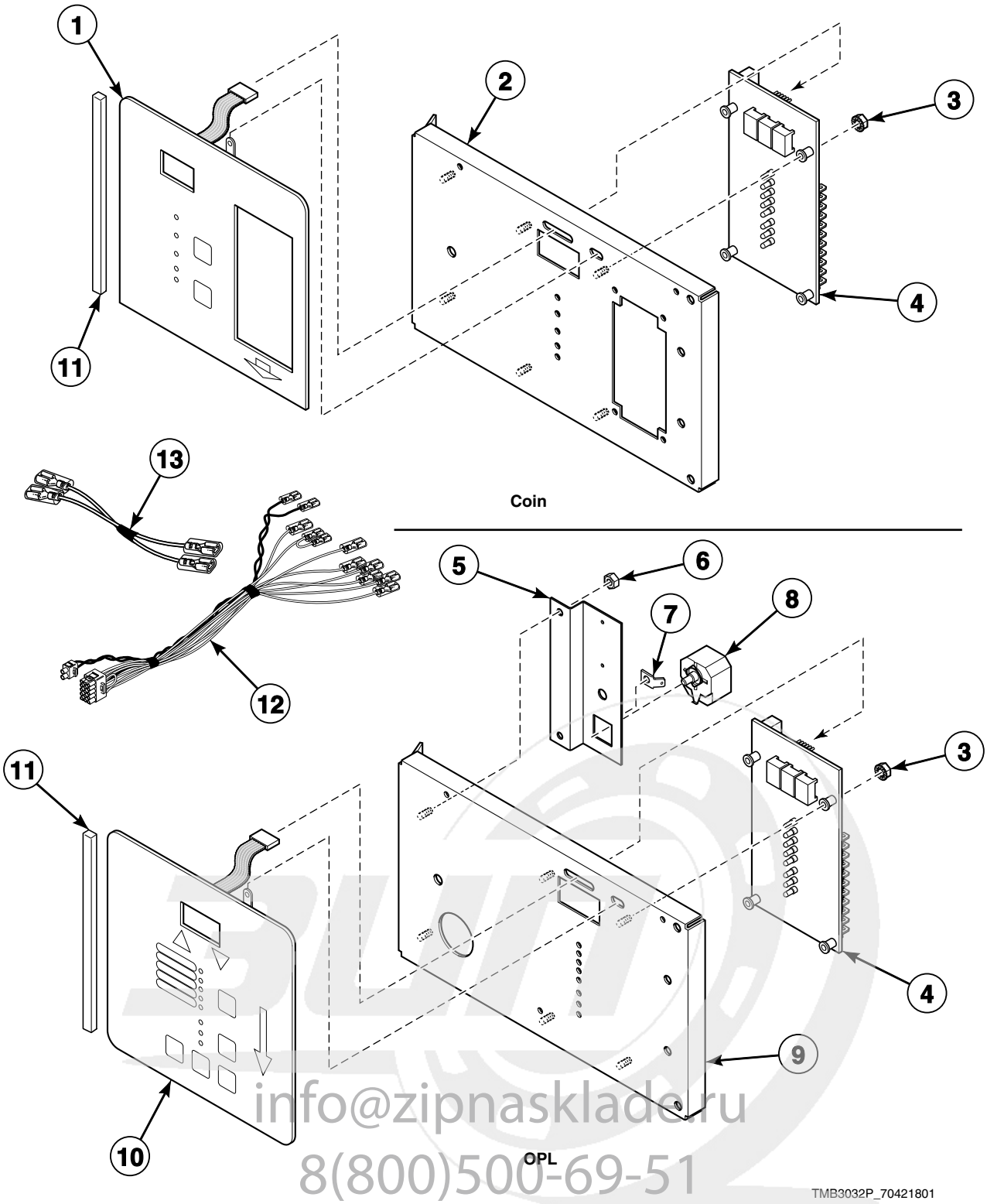

info@zipnasklade.ru
8(800)500-69-51

© Copyright, Alliance Laundry Systems LLC – DO NOT COPY or TRANSMIT

DMP Control

REF	PART NO.	DESCRIPTION	COMMENTS
	M4797P3	Control Conversion Kit	C models except CT050T and CU050T; DV and DX control suffixes
1	44039402P	Membrane Switch	Coin
2	44041001	Control Plate Assembly	Coin; Includes studs
3	29787	Nut	
4	44037801P	Electronic Control	
5	44041701	Relay/Buzzer Bracket	
6	70054	Nut	
7	00177	Male Tab Terminal	
8	505447	Adjustable Buzzer	
9	44040901	Control Plate Assembly	OPL; Includes studs
10	44037901P	Membrane Switch	OPL
11	70414101	Foam Gasket	
12	70341801P	Control Panel Harness Assembly	Non-CE models
	70341901P	Control Panel Harness	CE models; Coin
	70342001P	Control Panel Harness	CE models; OPL
13	44042701	Jumper Set Assembly	Coin; Use in addition to item 12
	44042801	Jumper Set Assembly	OPL; Buzzer; Use in addition to item 12

info@zipnasklade.ru
8(800)500-69-51

© Copyright, Alliance Laundry Systems LLC – DO NOT COPY or TRANSMIT

DX4 Electronic Control

D and I Models

Models with 3B, 3O, 3V, 3W, 3X and R3 Control Suffixes

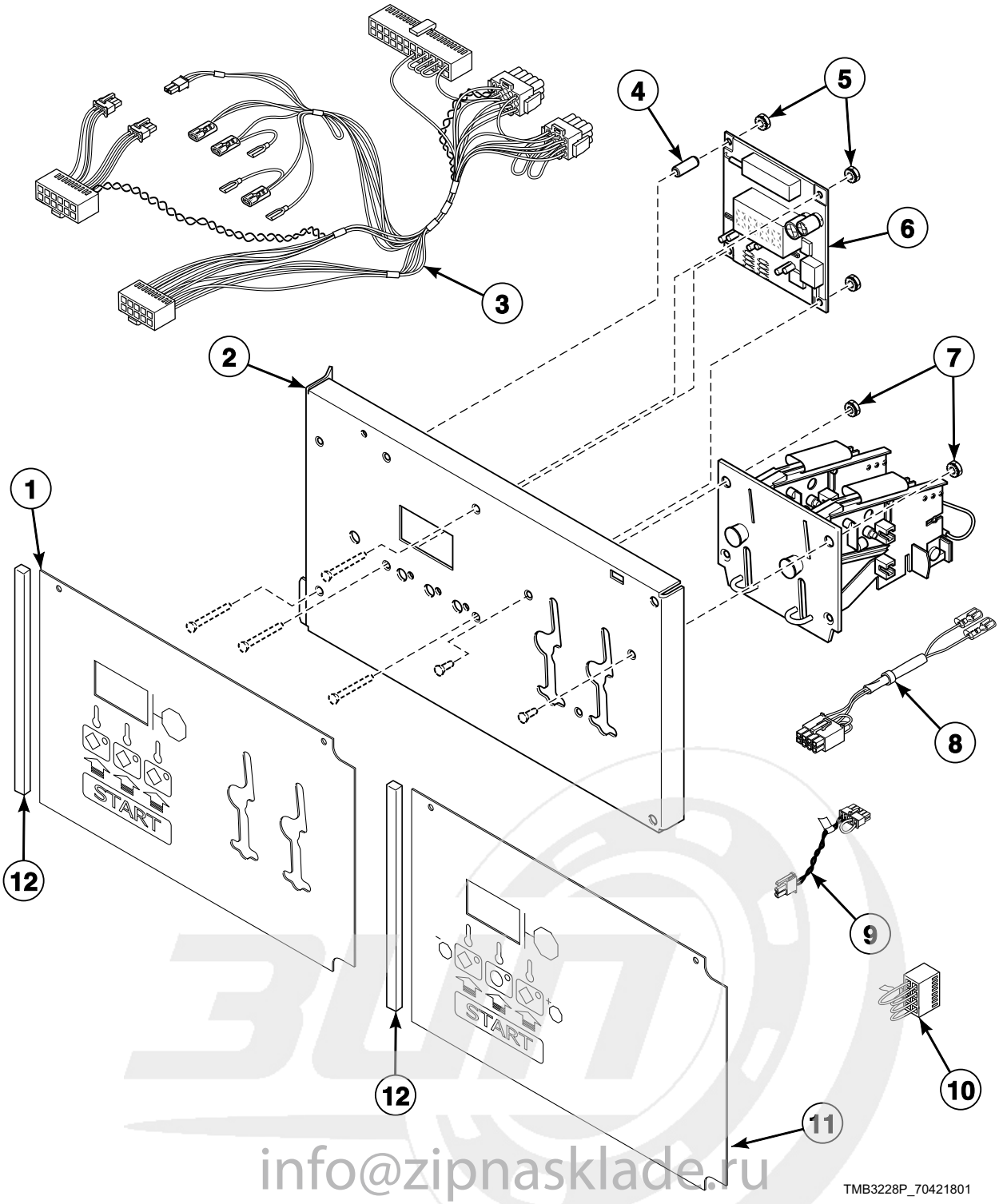

info@zipnasklade.ru
8(800)500-69-51

© Copyright, Alliance Laundry Systems LLC – DO NOT COPY or TRANSMIT

DX4 Electronic Control

REF	PART NO.	DESCRIPTION	COMMENTS
1	44050502	Graphic Overlay	Dual; Coin (shown); Models through 7/31/11
	44239402	Graphic Overlay	Dual; Coin (shown); Models starting 8/1/11
	44050501	Graphic Overlay	Single; Coin; Models through 7/31/11
	44239401	Graphic Overlay	Single; Coin; Models starting 8/1/11
2	44050701P	Control Plate Kit	Includes studs
3	70315601P	Control Panel Harness	Non-CE and non-Australian models
	70315701	Control Panel Harness Assembly	CE and Australian models
4	44050601	Sleeve	4 required
5	29787	Nut	
6	70462305P	Control Assembly	3O control suffix
	70462306P	Control Assembly	R3 control suffix
	70462365P	Control Assembly	3V and 3X control suffixes
	70462366P	Control Assembly	3B and 3W control suffixes
7	29786	Nut	2 required
8	70364104P	Coin Vault Switch Harness	3V and 3B control suffixes; Non-CE models
9	70324604	Jumper Calibration Wire	
10	70364103	Bypass Harness	3O, 3W, 3X and R3 control suffixes; Non-CE models
11	44050401	Graphic Overlay	OPL; Models through 7/31/11
	44240501	Graphic Overlay	OPL; Models starting 8/1/11
12	70414101	Foam Gasket	

info@zipnasklade.ru
8(800)500-69-51

© Copyright, Alliance Laundry Systems LLC – DO NOT COPY or TRANSMIT

OPL Microprocessor Controls

H, S and U Models Through 7/31/11
G, K, L and P Models Through 1/1/12
Models with OM and RM Control Suffixes

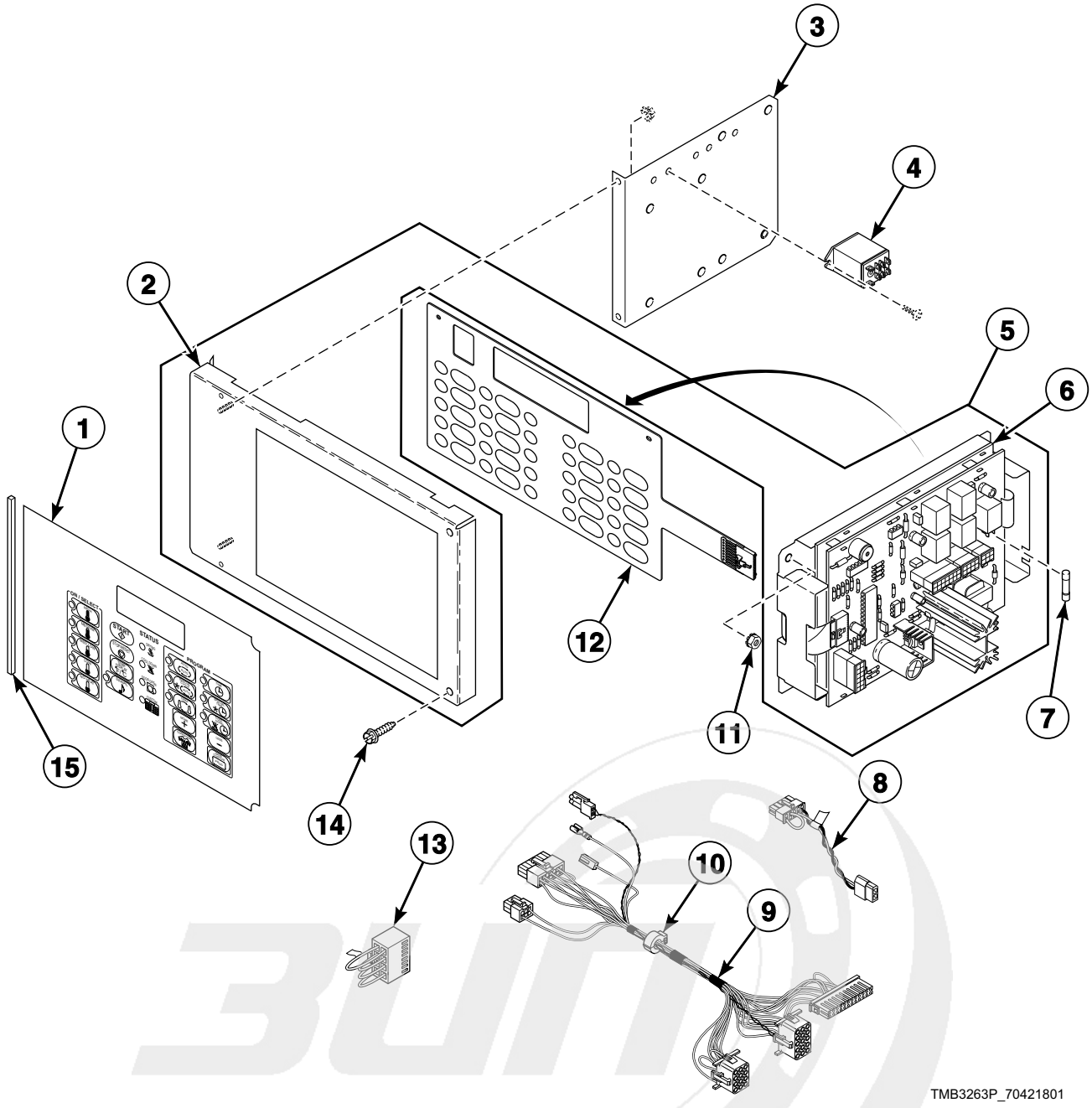

info@zipnasklade.ru
8(800)500-69-51

© Copyright, Alliance Laundry Systems LLC – DO NOT COPY or TRANSMIT

OPL Microprocessor Controls

REF	PART NO.	DESCRIPTION	COMMENTS
	M4457P3	RC Filter Kit	Includes (2) F330217P RC Filter and instructions
1	70115801	Overlay	L, S and U models; Nonreversing; Text and icon
	70128401	Overlay	L, S and U models; Reversing; Text and icon
	70130401	Overlay	S and U models; Nonreversing; Icon
	70130501	Overlay	S and U models; Reversing; Icon
	70128701	Overlay	H models; Nonreversing; Text and icon
	70128601	Overlay	H models; Reversing; Text and icon
	70130601	Overlay	H models; Nonreversing; Icon
	70130701	Overlay	H models; Reversing; Icon
	70130301	Overlay	P models; Nonreversing; Text and icon
	70135301	Overlay	P models; Reversing; Text and icon
	44130002	Overlay	G and K models; Nonreversing; Text and icon
	44130001	Overlay	G and K models; Reversing; Text and icon
2	70175805	Control Plate Assembly	
3	44018601	Temperature Control Bracket	
4	M412534	Relay	
5	44013601P	Control Assembly	Does not include overlay or control panel harness
6	70228401P	Control Kit	With tape
7	70406501	Fuse	
8	70084304	Jumper Calibration Wire	OM control suffix
	70084305	Jumper Calibration Wire	RM control suffix
9	70335301P	Control Panel Harness	Non-CE models
	70382701P	Control Panel Harness	CE models
10	M413930P	Ferrite Core Assembly	
11	70054	Nut	4 required
12	M414368P	Membrane Switch	
13	70364103	Bypass Harness	Non-CE models
14	70069901	Screw	2 required
15	70414101	Foam Gasket	

info@zipnasklade.ru
8(800)500-69-51

© Copyright, Alliance Laundry Systems LLC – DO NOT COPY or TRANSMIT

Coin Drop Components for MDC Models

G, H, K, L, P and S Models Except Thermal Oil Models
Models with BB, BC, BL, BW and BX Control Suffixes

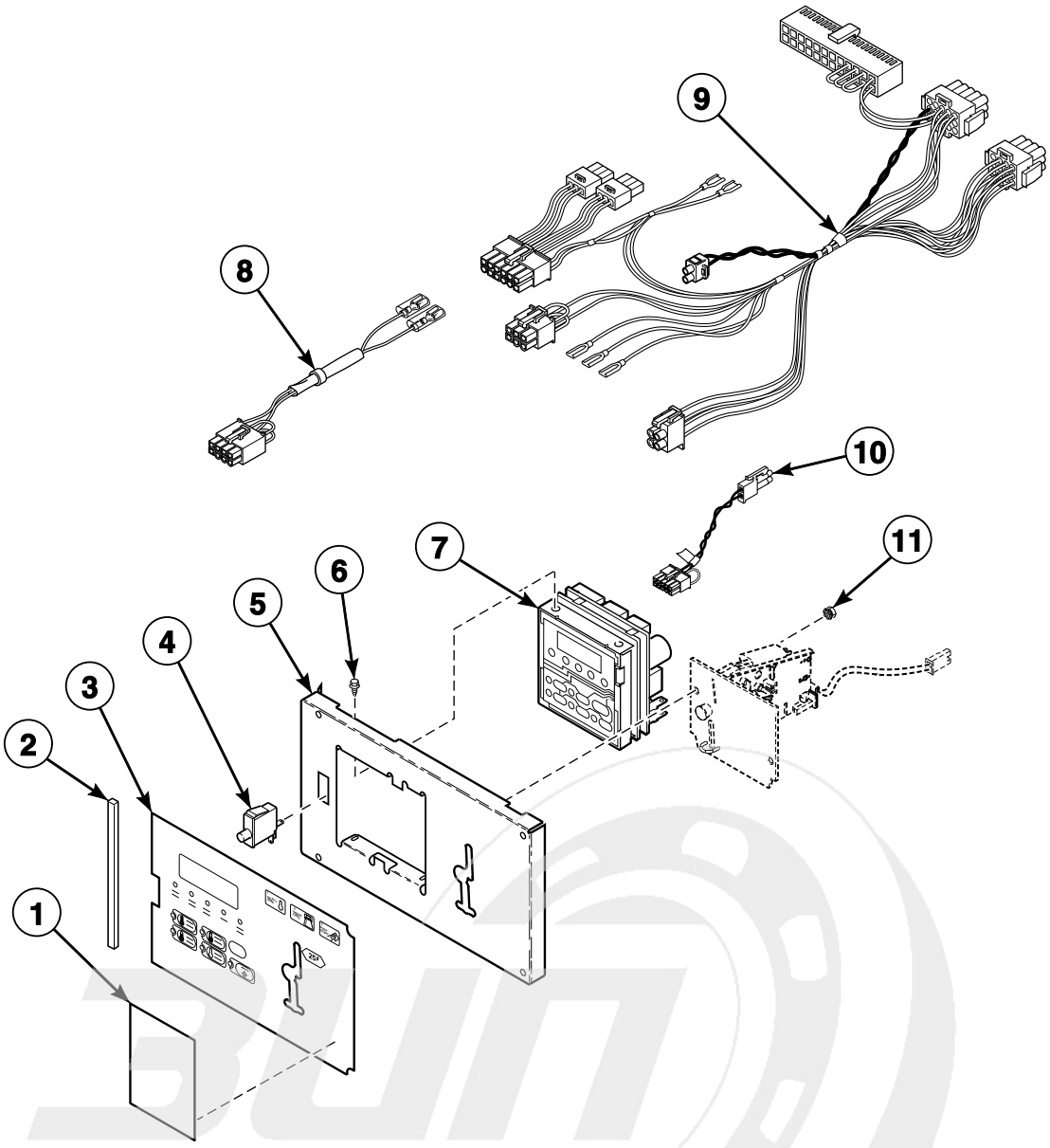

info@zipnasklade.ru
8(800)500-69-51

© Copyright, Alliance Laundry Systems LLC – DO NOT COPY or TRANSMIT

Coin Drop Components for MDC Models

REF	PART NO.	DESCRIPTION	COMMENTS
	70321201	Coin Drop Overlay Kit	P models
1	39564	Coin Drop Overlay	S models with BL** control suffix; Cover
	70246301	Coin Cover Overlay	G, K and L models with BL** control suffix; Cover
	70286701	Overlay	P models with BL** control suffix; Cover
	70275401	Overlay	H models with BL** control suffix; Cover
2	70414101	Foam Gasket	
3	70257701	Overlay	L and S models with BC, BL** and BX control suffixes; Text; Single drop
	70261001	Overlay	L and S models with BC, BL** and BX control suffixes; Icon; Single drop
	70257702	Overlay	L and S models with BC and BX control suffixes; Dual drop
	70261002	Overlay	L and S models with BC and BX control suffixes; Dual drop
	70258001	Overlay	H models with BC, BL** and BX control suffixes; Text; Single drop
	70261201	Overlay	H models with BC, BL** and BX control suffixes; Icon; Single drop
	70258002	Overlay	H models with BC and BX control suffixes; Dual drop
	70261202	Overlay	H models with BC and BX control suffixes; Icon; Dual drop
	70129501	Overlay	P models with BC* and BX* control suffixes; Single drop
	70129601	Overlay	P models with BC* and BX* control suffixes; Dual drop
	70321001	Overlay	P models with BC* and BX* control suffixes; World drop
	70259001	Overlay	P models with BC* and BX* control suffixes
	70453001	Overlay	G and K models; Text; Single drop
	70453002	Overlay	G and K models; Text; Dual drop
4	70413301	Pushbutton Switch	
5	70291001P	Control Plate Kit	
6	501524	Screw	4 required for mounting control
7	511867P	Control Assembly	
8	70364104P	Coin Vault Switch Harness	Non-CE models
9	70429101P	Control Panel Harness	Non-CE models
	70429201P	Control Panel Harness	CE models
10	70324604	Jumper Calibration Wire	
11	29786	Nut	3 required

*** NOTE: P models with BC or BX control suffixes require an overlay and coin drop overlay.**

**** NOTE: BL control suffix requires an overlay and overlay cover specific to model.**

info@zipnasklade.ru
8(800)500-69-51

© Copyright, Alliance Laundry Systems LLC – DO NOT COPY or TRANSMIT

Central Pay and Card Reader MDC Models

G, H, K, L, P and S Models Except Thermal Oil Models
Models with BL, BY and BZ Control Suffixes
Models with BG Control Suffix Through 1/15/12

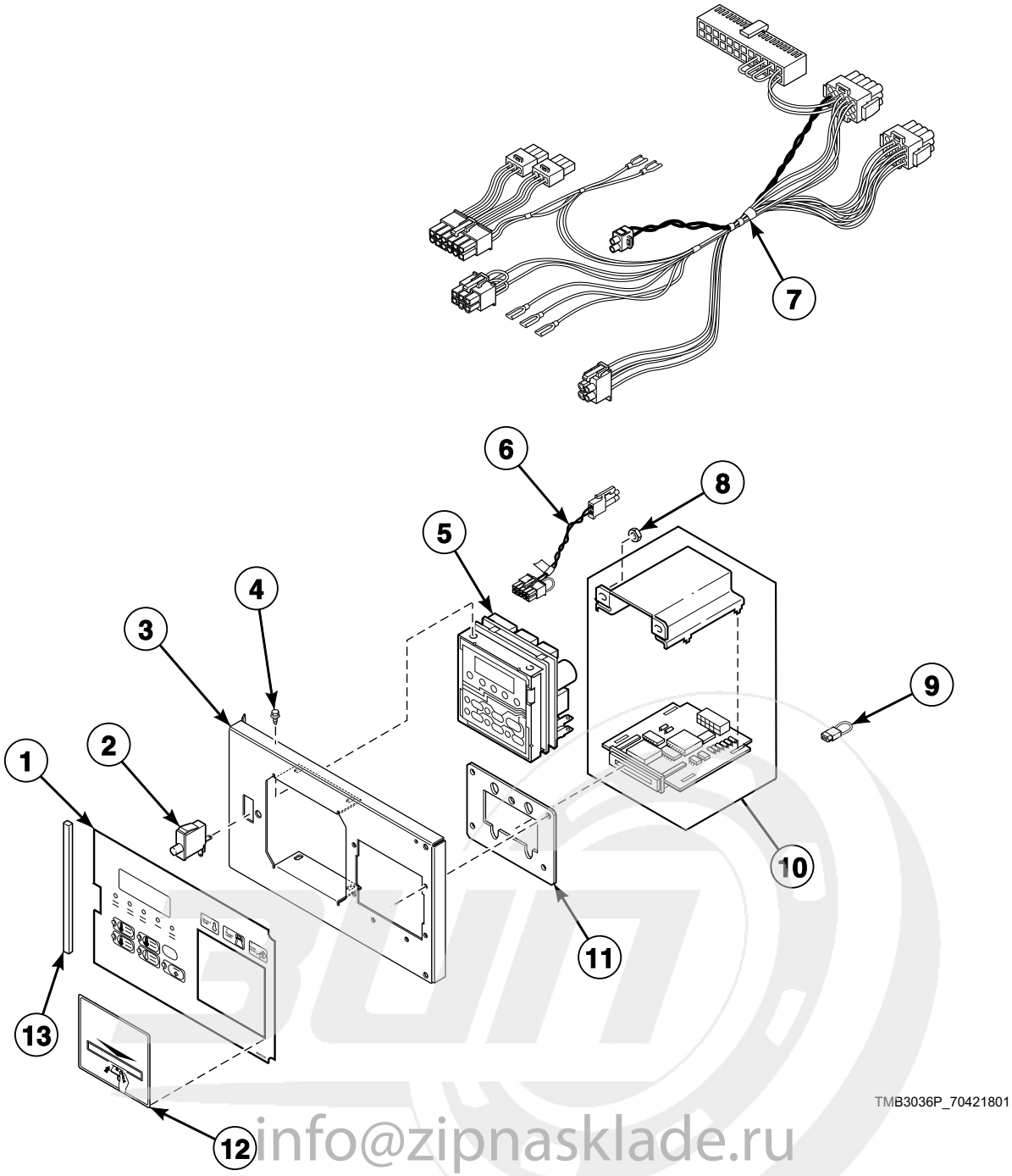

info@zipnasklade.ru
8(800)500-69-51

© Copyright, Alliance Laundry Systems LLC – DO NOT COPY or TRANSMIT

Central Pay and Card Reader MDC Models

REF	PART NO.	DESCRIPTION	COMMENTS
1	70266701	Overlay	L and S models with BY control suffix; Text
	N/A	Overlay	L and S models with BY control suffix; Icon
	70257703	Overlay	L and S models except model ST050D with BY control suffix; Text
	70261003	Overlay	L and S models except model ST050D with BY control suffix; Icon
	70259001	Overlay	P models with BL* control suffix
	70266801	Overlay	H models with BY control suffix; Text
	70258003	Overlay	H models except model HT050D with BY control suffix; Text
	70453101	Overlay	G and K models
2	70413301	Pushbutton Switch	
3	70348801	Control Plate Assembly	H, P and S models except models HT050D and ST050D with BY control suffix
	70291001P	Control Plate Kit	H, L, P and S models with BL control suffix
4	501524	Screw	
5	511867P	Control Assembly	
6	70324604	Jumper Calibration Wire	
7	70429101P	Control Panel Harness	Non-CE models
	70358701	Control Panel Harness	CE models
8	70054	Nut	
9	70364103	Bypass Harness	Non-CE models
10	510068P	Card Reader and Bracket Assembly	
11	70208801	Mounting Plate	H, P and S models except models HT050D and ST050D with BY control suffix
12	70334201	Card Reader Overlay	S models; Black
	70334301	Card Reader Overlay	H models; Gray
	70246301	Coin Cover Overlay	G, K and L models
13	70414101	Foam Gasket	

N/A = Part no longer available

*** NOTE: BL control suffix requires an overlay and overlay cover specific to model.**

info@zipnasklade.ru
8(800)500-69-51

© Copyright, Alliance Laundry Systems LLC – DO NOT COPY or TRANSMIT

Optional Card Reader Mountings for MDC Models

H, K, L and S Models Except Thermal Oil Models
Models with BY Control Suffix

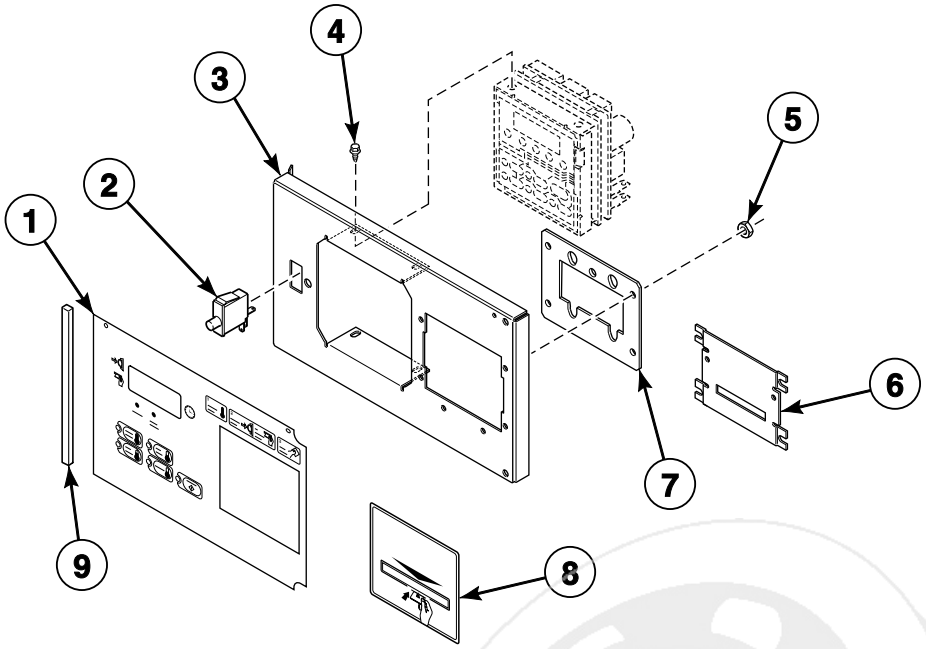

TMB3037P_70421801

info@zipnasklade.ru
8(800)500-69-51

© Copyright, Alliance Laundry Systems LLC – DO NOT COPY or TRANSMIT

Optional Card Reader Mountings for MDC Models

REF	PART NO.	DESCRIPTION	COMMENTS
1	70257703	Overlay	L and S models; Text and icon
	70258003	Overlay	H models; Text and icon
	70453101	Overlay	K models
2	70413301	Pushbutton Switch	
3	70348801	Control Plate Assembly	
4	501524	Screw	4 required
5	70054	Nut	4 required
6	44089501	Slot Card Plate Assembly	Included in literature packet
7	70208801	Mounting Plate	
8	70334201	Card Reader Overlay	Black; Included in literature packet
	70334301	Card Reader Overlay	Gray; Included in literature packet
9	70414101	Foam Gasket	

info@zipnasklade.ru
8(800)500-69-51

© Copyright, Alliance Laundry Systems LLC – DO NOT COPY or TRANSMIT

Coin Drops

All Models Except U Models

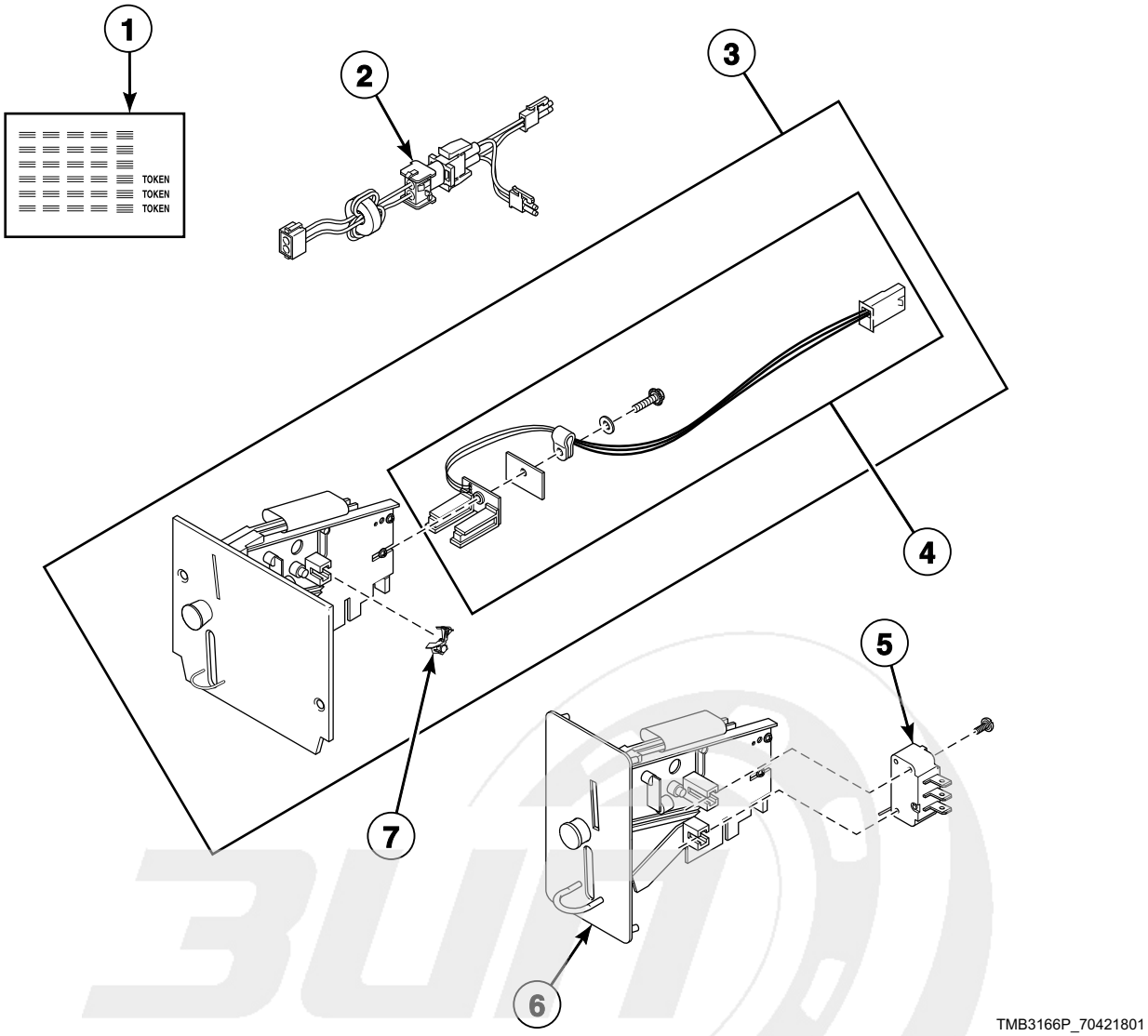

info@zipnasklade.ru
8(800)500-69-51

© Copyright, Alliance Laundry Systems LLC – DO NOT COPY or TRANSMIT

Coin Drops

REF	PART NO.	DESCRIPTION	COMMENTS
1	38725	Coin Identification Paper	
2	44065801	Electronic Coin Drop Harness	
3	70294103P	Electronic Coin Drop Assembly	United Kingdom (default) and Europe
	70294104	Electronic Coin Drop Assembly	Euro (default), Denmark and Norway
	70294105P	Electronic Coin Drop Assembly	Australian (default), New Zealand, Hong Kong, South Korea and Malaysia
	70294106	Electronic Coin Drop Assembly	Mexico (default), Ecuador and USA dollar
	70294107	Electronic Coin Drop Assembly	Lithuania (default), Latvia and Europe
	70294116	Electronic Coin Drop Assembly	Malaysia (default) and China
	70294117	Electronic Coin Drop Assembly	Russia; 5.00 and 10.00
	70294119	Electronic Coin Drop Assembly	Thailand; 1, 5 and 10 Baht
	70294120	Electronic Coin Drop Assembly	Chile; Chilean peso
	70294121	Electronic Coin Drop Assembly	Singapore
	70441601P	Coin Drop	USA; $.25; Single
	70256402P	Coin Drop	USA; $.25 and $1.00; Dual
	70429001	Coin Drop	D models; USA
	38475	Coin Drop Assembly	Japan; 100 yen
	38519	Coin Drop Assembly	Japan; 100 and 500 yen
	38467	Coin Drop Assembly	Australia; .20 and 1.00
	70447301	Coin Drop Assembly	Australia; 1.00 and 2.00
	70482401	Coin Drop Assembly	New Zealand; 1.00 and 2.00
	39748	Coin Drop	Token; Jeton; CE models
	210195	Coin Drop Assembly	Euro; .20 and 1.00
	210196	Coin Drop Assembly	Euro; .50 and 1.00
	70283102	Coin Drop Assembly	Euro; .20 and .50
	70294111	Electronic Coin Drop Assembly	Euro; .10, .20, .50, 1.00 and 2.00
	38462P	Coin Drop Assembly	Token; 118-1
	38463	Coin Drop Assembly	Token; 118-5
	70471601	Coin Drop Assembly	Token; 7K
	38464P	Coin Drop Assembly	Canada; .25
	70441602	Coin Drop Assembly	Canada; .25 and 1.00
	38472	Coin Drop Assembly	England; 20 pence and 1 pound
	38521	Coin Drop Assembly	Korea; 100 and 500 won
	38963P	Coin Drop	Token; 118-16
	39157	Coin Drop Assembly	Israel; Shekel
	CK077	Coin Drop Kit	Taiwan; 10 NT
	70281102	Coin Drop Assembly	Taiwan; Dual drop
4	200674P	Opto Coupler	
5	CM1100P	Coin Drop Switch	C, D and I models
6	44039701P	Coin Drop Assembly	USA; $.25; DO, DV, DX and RD control suffixes
	44039702	Coin Drop Assembly	Mexico; 2 peso; DO, DV, DX and RD control suffixes
	44039703	Coin Drop Assembly	Token; .880; DO, DV, DX and RD control suffixes
	44039704	Coin Drop Assembly	Japan; 100 yen; DO, DV, DX and RD control suffixes
	44039705	Coin Drop Assembly	England; 20 pence; DO, DV, DX and RD control suffixes
	44039706	Coin Drop Assembly	Token; .800; DO, DV, DX and RD control suffixes
	44039707	Coin Drop Assembly	England; 50 pence; DO, DV, DX and RD control suffixes
7	201595P	Wire Guard	

N/A = Part no longer available

info@zipnaskladem.pl
8(800)500-69-51

© Copyright, Alliance Laundry Systems LLC – DO NOT COPY or TRANSMIT

Coin Drop Kits

All Models Except U Models

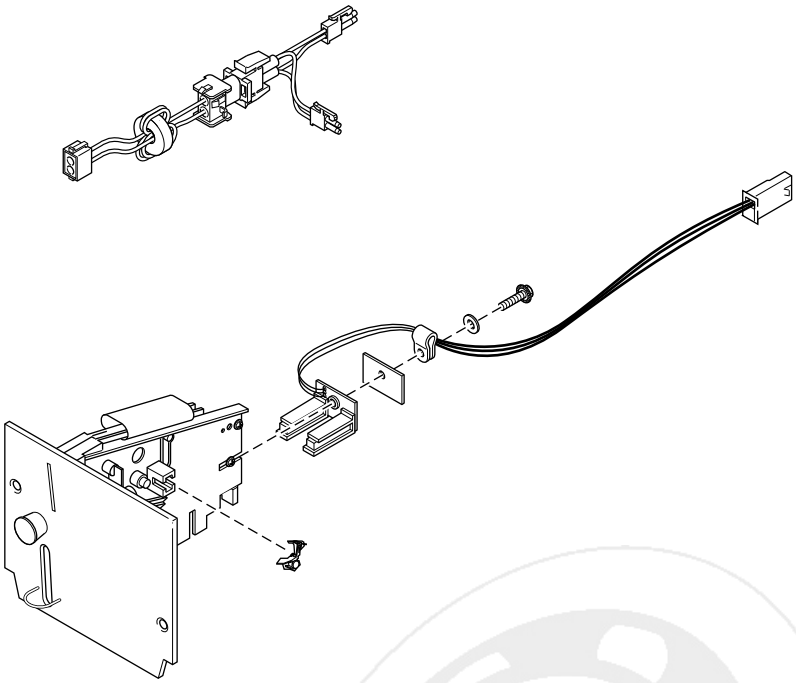

TMB2738PA_70421801

info@zipnasklade.ru
8(800)500-69-51

© Copyright, Alliance Laundry Systems LLC – DO NOT COPY or TRANSMIT

Coin Drop Kits

REF	PART NO.	DESCRIPTION	COMMENTS
	CK115	Electronic Coin Drop Kit	USA and Canada
	CK099	Electronic Coin Drop Kit	Australia (default), New Zealand, Hong Kong, South Korea and Malaysia
	CK100	Electronic Coin Drop Kit	United Kingdom (default), and Europe
	CK101	Electronic Coin Drop Kit	Euro (default), Denmark and Norway
	CK103	Electronic Coin Drop Kit	Lithuania (default), Latvia and Europe
	CK108	Electronic Coin Drop Kit	South Africa
	CK109	Electronic Coin Drop Kit	Euro
	CK113	Electronic Coin Drop Kit	Japan and Taiwan
	CK116	Electronic Coin Drop Kit	Malaysia (default) and China
	CK117	Electronic Coin Drop Kit	Russia
	CK118	Electronic Coin Drop Kit	Philippine
	CK119	Electronic Coin Drop Kit	Thailand
	CK120	Electronic Coin Drop Kit	Chile
	CK121	Electronic Coin Drop Kit	Singapore
	CK122	Electronic Coin Drop Kit	New Zealand; 1.00 and 2.00

info@zipnasklade.ru
8(800)500-69-51

© Copyright, Alliance Laundry Systems LLC – DO NOT COPY or TRANSMIT

Coin Drop Components for Quantum Control

S Models

Models with LB, LC, LW, LX, WB, WC, WW and WX Control Suffixes

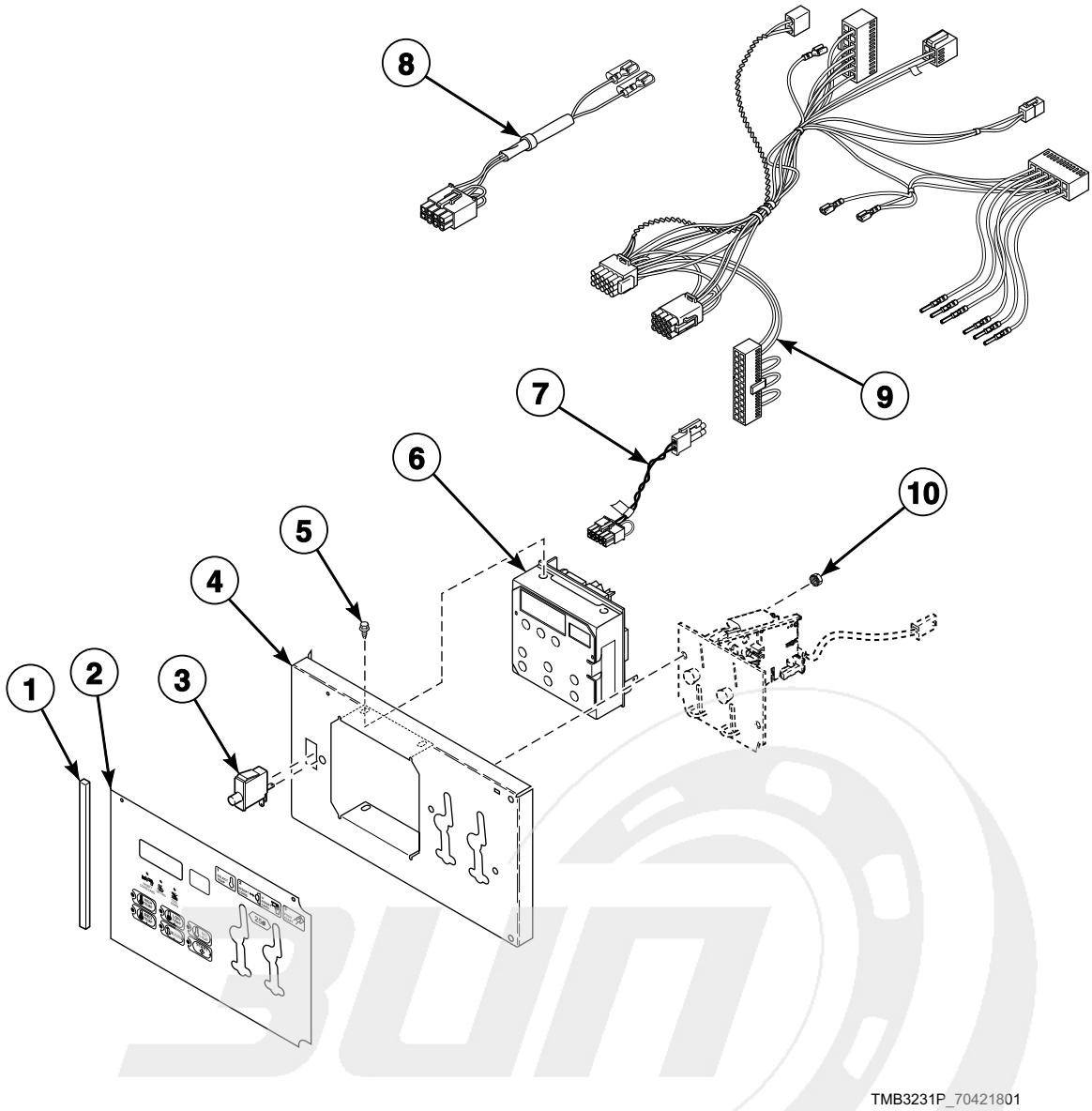

info@zipnasklade.ru
8(800)500-69-51

© Copyright, Alliance Laundry Systems LLC – DO NOT COPY or TRANSMIT

Coin Drop Components for Quantum Control

REF	PART NO.	DESCRIPTION	COMMENTS
	NK208	Network Retrofit Kit	LC and LX control suffixes; Wired
	NK220	Network Controller Kit	LC and LX control suffixes; Wired
	NK301	Wireless Network Kit	LC and LX control suffixes; Wireless
	NK320	Ethernet Gateway Kit	LC and LX control suffixes; Wireless
	NK330	USB Gateway Kit	LC and LX control suffixes; Wireless
1	70414101	Foam Gasket	
2	44194801	Control Overlay	Model ST050D
	70449501	Control Overlay	Model ST050D
	70410001	Control Overlay	Single drop; All models except ST050D
	70410002	Control Overlay	Dual drop; All models except ST050D
3	70413301	Pushbutton Switch	
4	70291001P	Control Plate Kit	
5	501524	Screw	4 required for mounting control
6	70450501P	Control Assembly	Nonreversing
	70450503	Control Assembly	Reversing
7	70324604	Jumper Calibration Wire	
8	70364104P	Coin Vault Switch Harness	Non-CE models
9	70410401P	Control Panel Harness	
10	29786	Nut	2 required

info@zipnasklade.ru
8(800)500-69-51

© Copyright, Alliance Laundry Systems LLC – DO NOT COPY or TRANSMIT

Card Reader Components for Quantum Control

S Models

Models with LY, LZ, WY and WZ Control Suffixes

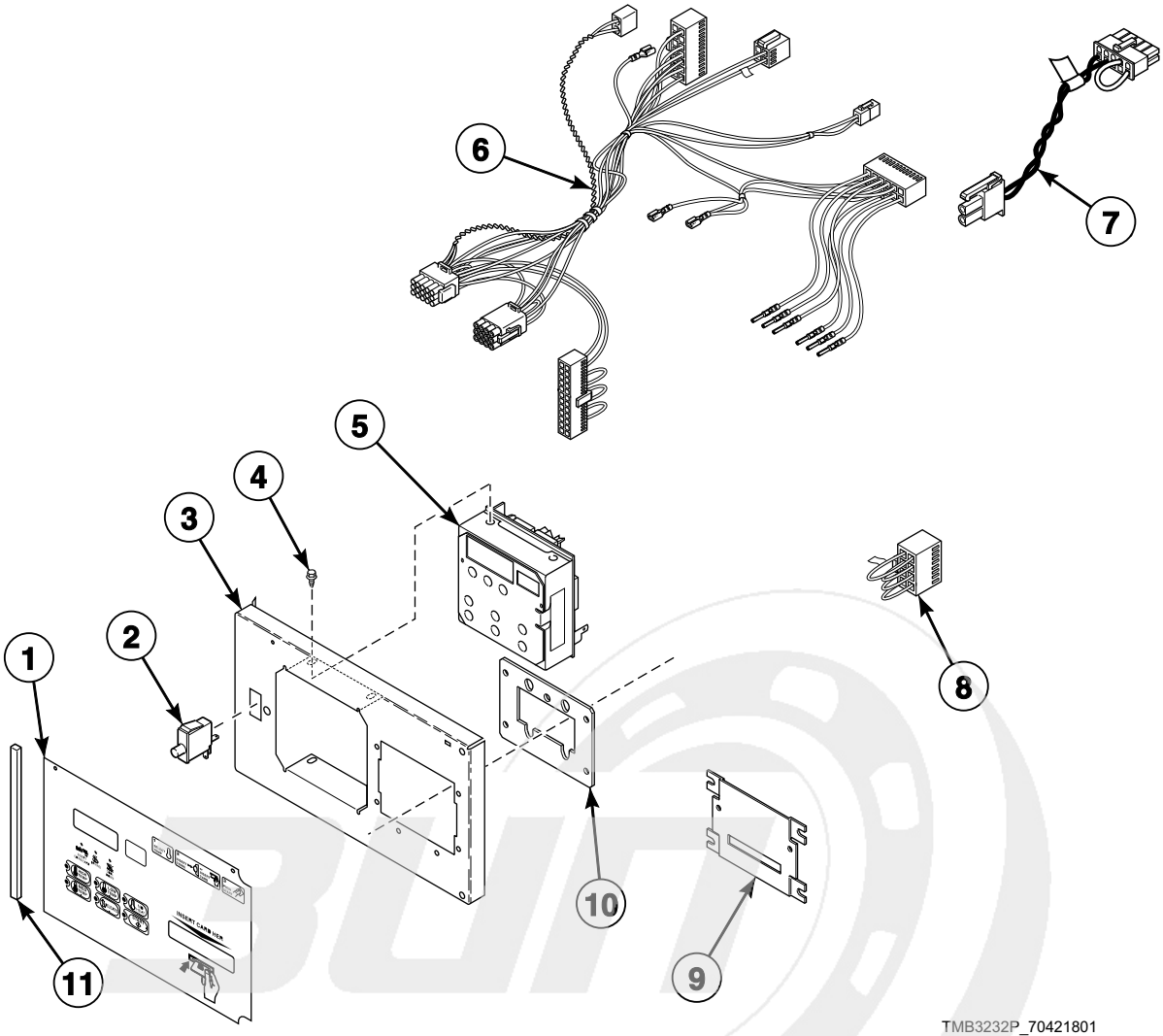

info@zipnasklade.ru
8(800)500-69-51

© Copyright, Alliance Laundry Systems LLC – DO NOT COPY or TRANSMIT

Card Reader Components for Quantum Control

REF	PART NO.	DESCRIPTION	COMMENTS
	NK208	Network Retrofit Kit	LY control suffix; Wired
	NK220	Network Controller Kit	LY control suffix; Wired
	NK301	Wireless Network Kit	LY control suffix; Wireless
	NK320	Ethernet Gateway Kit	LY control suffix; Wireless
	NK330	USB Gateway Kit	LY control suffix; Wireless
1	70410003	Overlay	
2	70413301	Pushbutton Switch	
3	70348801	Control Plate Assembly	
4	501524	Screw	4 required
5	70450501P	Control Assembly	Nonreversing
	70450503	Control Assembly	Reversing
6	70410401P	Control Panel Harness	
7	70324604	Jumper Calibration Wire	
8	70364103	Bypass Harness	Non-CE models
9	44089501	Slot Card Plate Assembly	
10	70208801	Mounting Plate	
11	70414101	Foam Gasket	

info@zipnasklade.ru
8(800)500-69-51

© Copyright, Alliance Laundry Systems LLC – DO NOT COPY or TRANSMIT

Network Board for Quantum Control

S Models

Models with WB, WC, WW, WX, WY and WZ Control Suffixes

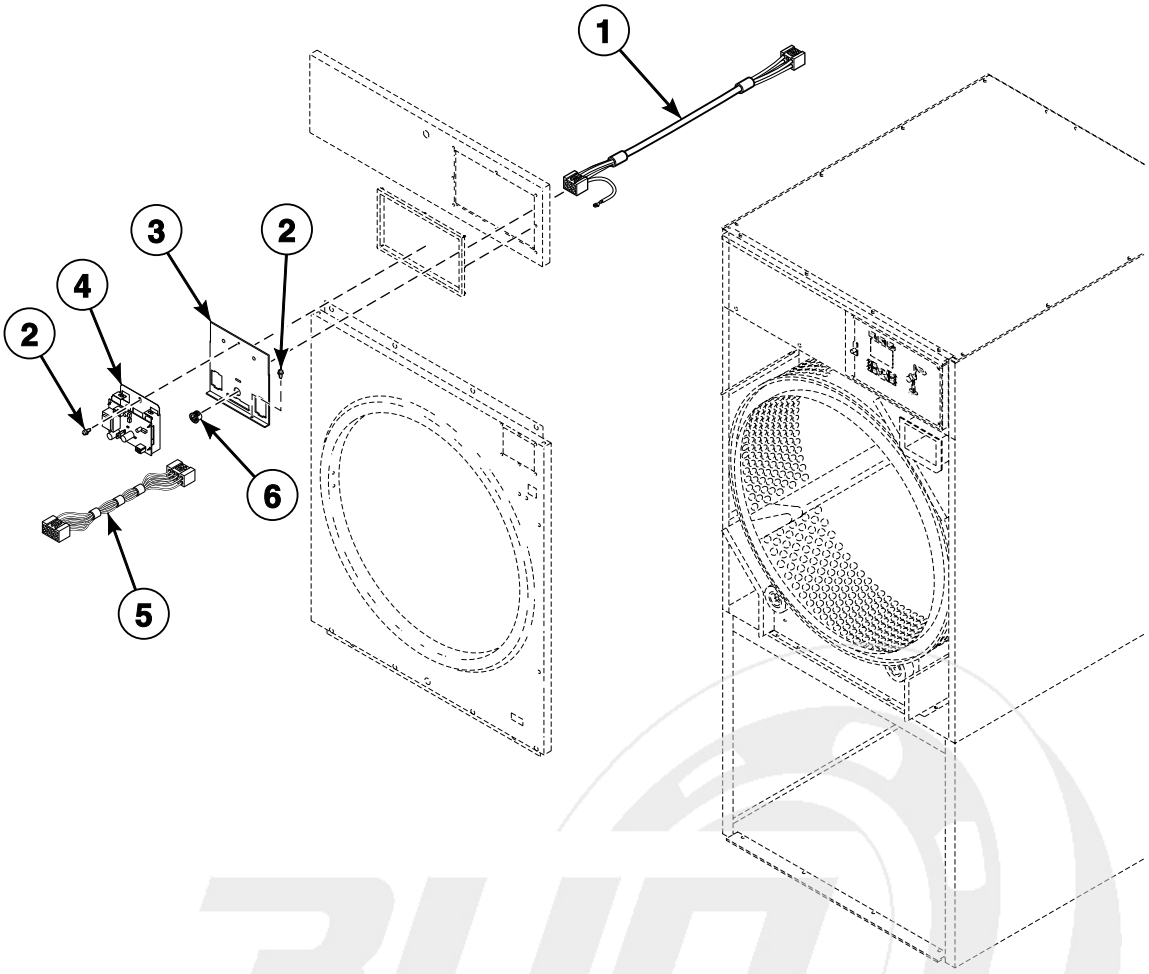

TMB2954P_70421801

info@zipnasklade.ru
8(800)500-69-51

© Copyright, Alliance Laundry Systems LLC – DO NOT COPY or TRANSMIT

Network Board for Quantum Control

REF	PART NO.	DESCRIPTION	COMMENTS
	800246	Communication Wire Harness Assembly	
1	44141801P	Network Harness	
2	430497	Screw	
3	70307002	Control Housing Cover	
4	201341	Network Board Assembly	
5	44088501P	Network Wire Harness Assembly	
6	M400770	Snap Bushing	

info@zipnasklade.ru
8(800)500-69-51

© Copyright, Alliance Laundry Systems LLC – DO NOT COPY or TRANSMIT

Network Connection for Quantum

S Models

Models with WC, WX and WY Control Suffixes

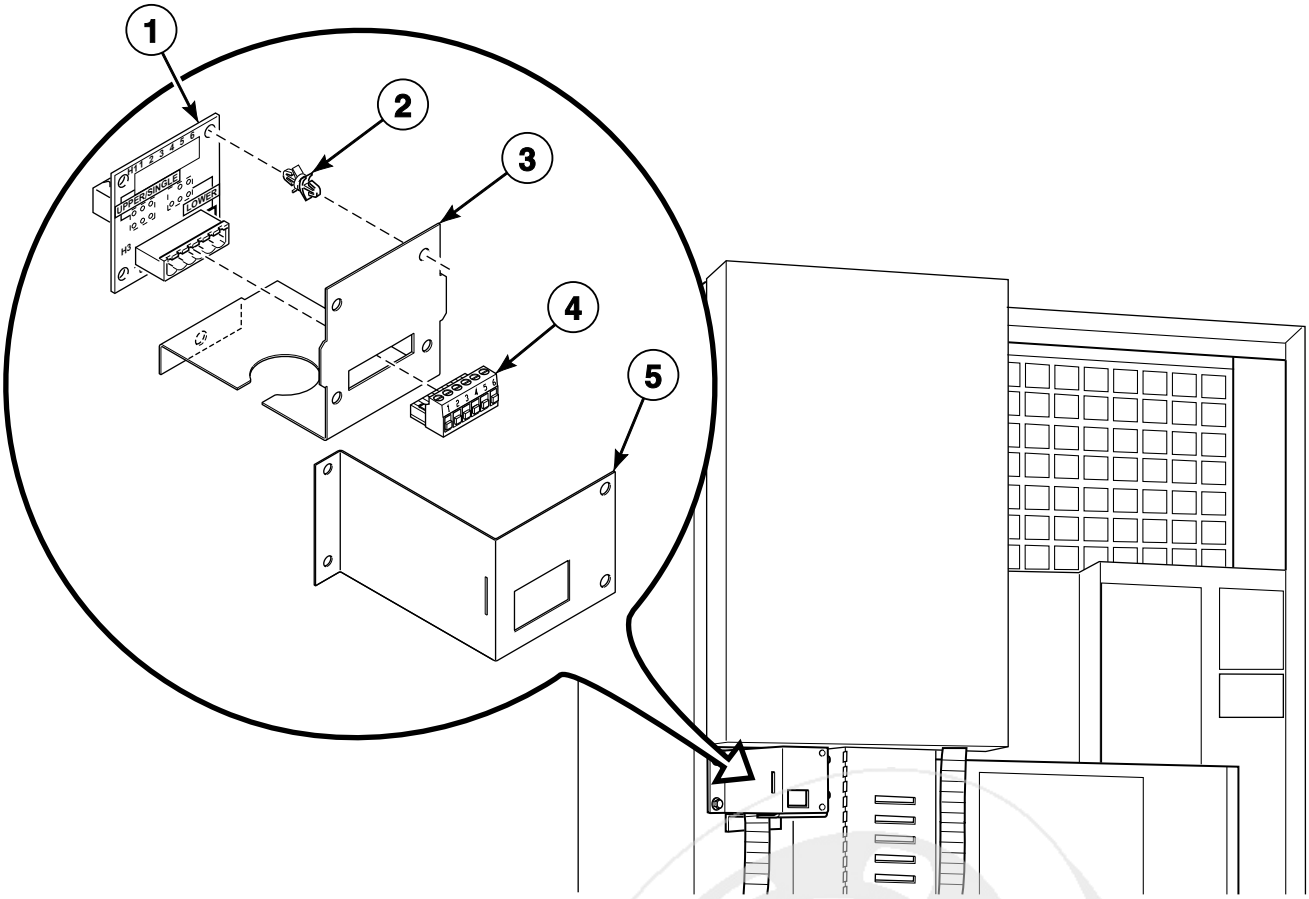

TMB2955P_70421801

info@zipnasklade.ru
8(800)500-69-51

© Copyright, Alliance Laundry Systems LLC – DO NOT COPY or TRANSMIT

Network Connection for Quantum

REF	PART NO.	DESCRIPTION	COMMENTS
	201341	Network Board Assembly	
1	210095P	Communication Board	
2	210098	PC Board Standoff	4 required
3	44143601	Network Board Bracket	
4	210099	Communication Connector	
5	44143701	Network Board Cover	

info@zipnasklade.ru
8(800)500-69-51

© Copyright, Alliance Laundry Systems LLC – DO NOT COPY or TRANSMIT

Coin Drop Components for Galaxy 600 Control

H Models

Models with KB, KC, KW and KX Control Suffixes

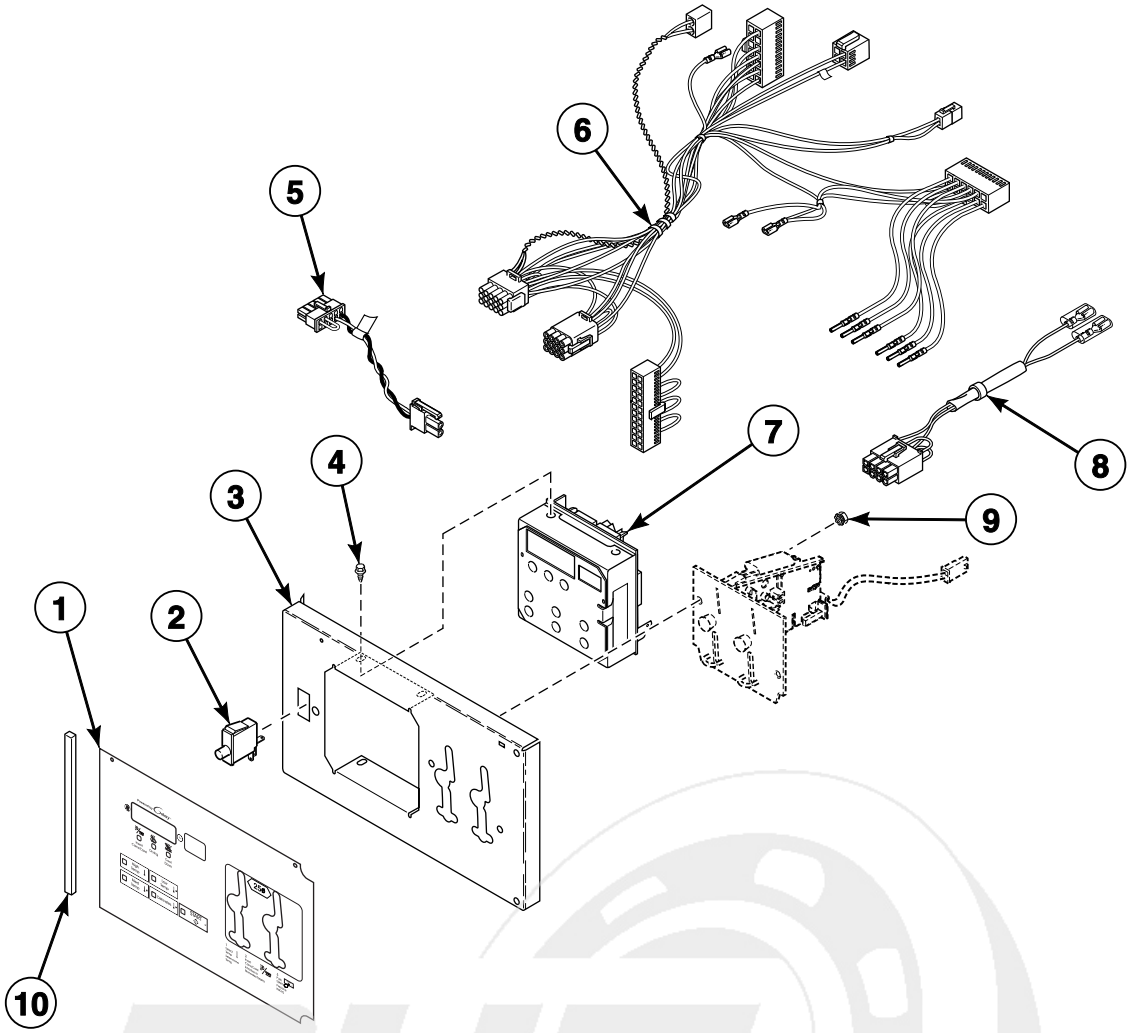

TMB3201P_70421801

info@zipnasklade.ru
8(800)500-69-51

© Copyright, Alliance Laundry Systems LLC – DO NOT COPY or TRANSMIT

Coin Drop Components for Galaxy 600 Control

REF	PART NO.	DESCRIPTION	COMMENTS
1	70473001	Control Overlay	Single drop
	70473002	Control Overlay	Dual drop
2	70413301	Pushbutton Switch	
3	70291001P	Control Plate Kit	
4	501524	Screw	For mounting item 7
5	70324604	Jumper Calibration Wire	
6	70410401P	Control Panel Harness	
7	70450502	Control Assembly	Nonreversing
	70450504	Control Assembly	Reversing
8	70364104P	Coin Vault Switch Harness	Non-CE models
9	70054	Nut	
10	70414101	Foam Gasket	6 inches required; Mounts to front of overlay, even with edge

info@zipnasklade.ru
8(800)500-69-51

© Copyright, Alliance Laundry Systems LLC – DO NOT COPY or TRANSMIT

Card Reader Components for Galaxy 600 Control

H Models

Models with KY and KZ Control Suffixes

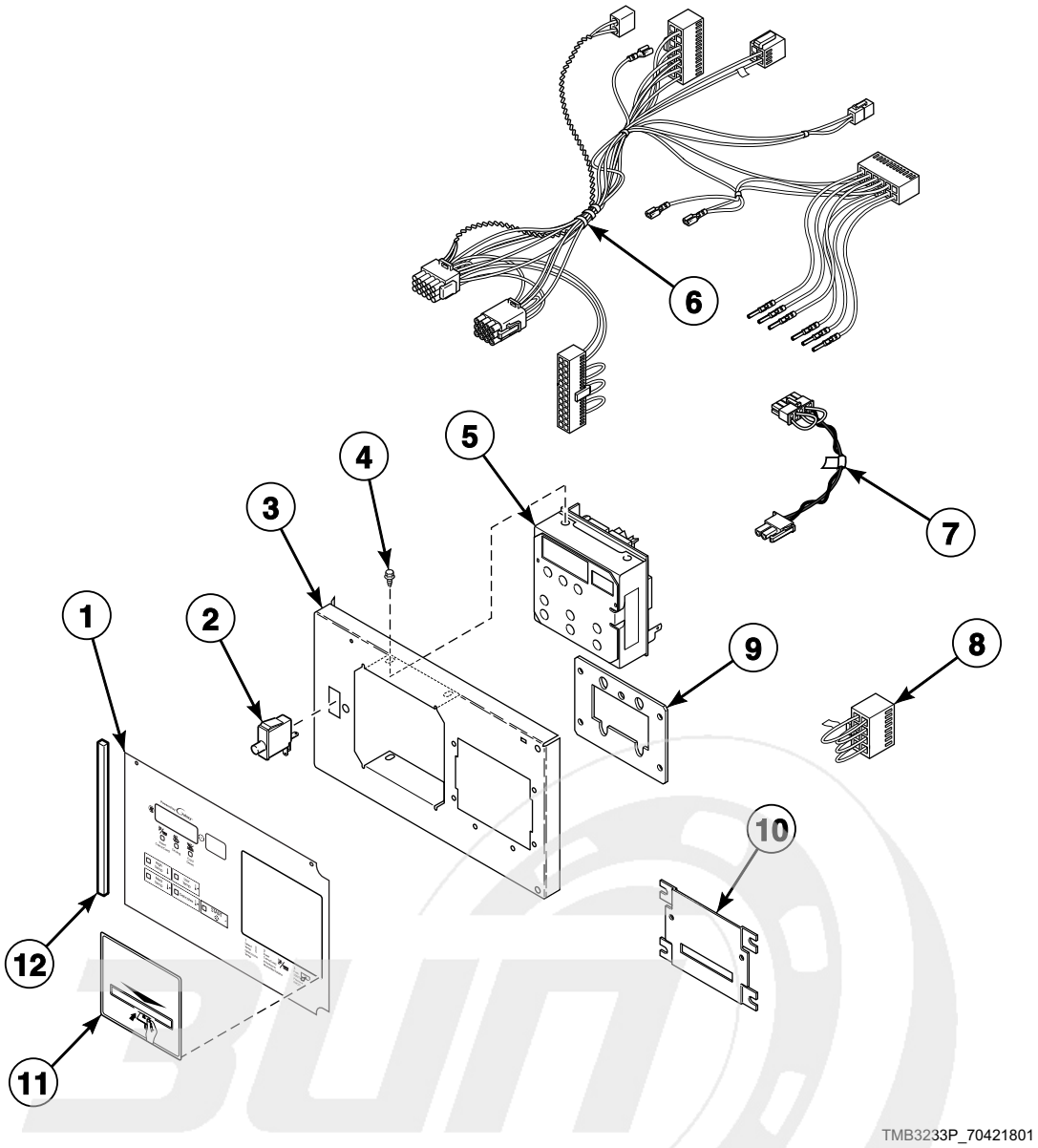

info@zipnasklade.ru
8(800)500-69-51

© Copyright, Alliance Laundry Systems LLC – DO NOT COPY or TRANSMIT

Card Reader Components for Galaxy 600 Control

REF	PART NO.	DESCRIPTION	COMMENTS
1	70473003	Control Overlay	
2	70413301	Pushbutton Switch	
3	70336501	Control Plate Assembly	
4	501524	Screw	
5	70450502	Control Assembly	Nonreversing
	70450504	Control Assembly	Reversing
6	70410401P	Control Panel Harness	
7	70324604	Jumper Calibration Wire	
8	70364103	Bypass Harness	Non-CE models
9	70208801	Mounting Plate	
10	44089501	Slot Card Plate Assembly	
11	70334301	Card Reader Overlay	
12	70414101	Foam Gasket	6 inches required; Mounts to front of overlay, even with edge

info@zipnasklade.ru
8(800)500-69-51

© Copyright, Alliance Laundry Systems LLC – DO NOT COPY or TRANSMIT

UniLinc Control

U Models

Models with UO and RU Control Suffixes

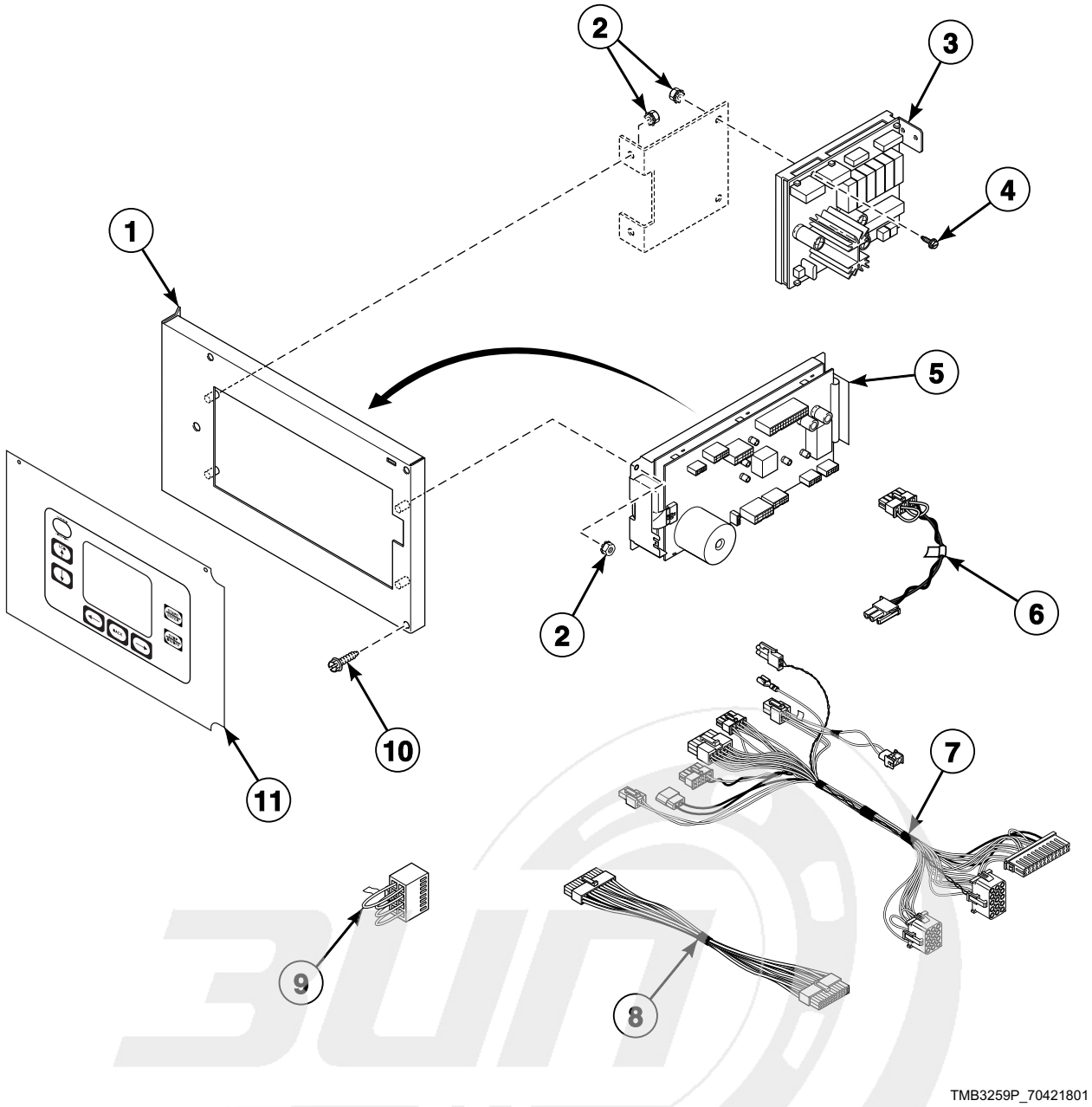

info@zipnasklade.ru
8(800)500-69-51

© Copyright, Alliance Laundry Systems LLC – DO NOT COPY or TRANSMIT

UniLinc Control

REF	PART NO.	DESCRIPTION	COMMENTS
	NK208	Network Retrofit Kit	Wired
	NK220	Network Controller Kit	Wired
	NK301	Wireless Network Kit	Wireless
	NK320	Ethernet Gateway Kit	Wireless
	NK330	USB Gateway Kit	Wireless
1	70432101	Control Plate Assembly	Models through 7/8/12
	70475601	Control Plate Assembly	Models starting 7/9/12
2	70054	Nut	
3	70434101P	Control Assembly	
4	501524	Screw	
5	70454001P	Control Assembly	
6	70324604	Jumper Calibration Wire	
7	44240301	Control Panel Harness	Goes from item 5 to main harness
8	44186101	Output Harness	Use between item 3 and item 5
9	70364103	Bypass Harness	Non-CE models
10	70069901	Screw	
11	70432201	Overlay	

info@zipnasklade.ru
8(800)500-69-51

© Copyright, Alliance Laundry Systems LLC – DO NOT COPY or TRANSMIT

LED OPL Control

C, D, H, I, S and U Models
G, K, L, P and Y Models Starting 1/16/12
Models with EO and RE Control Suffixes

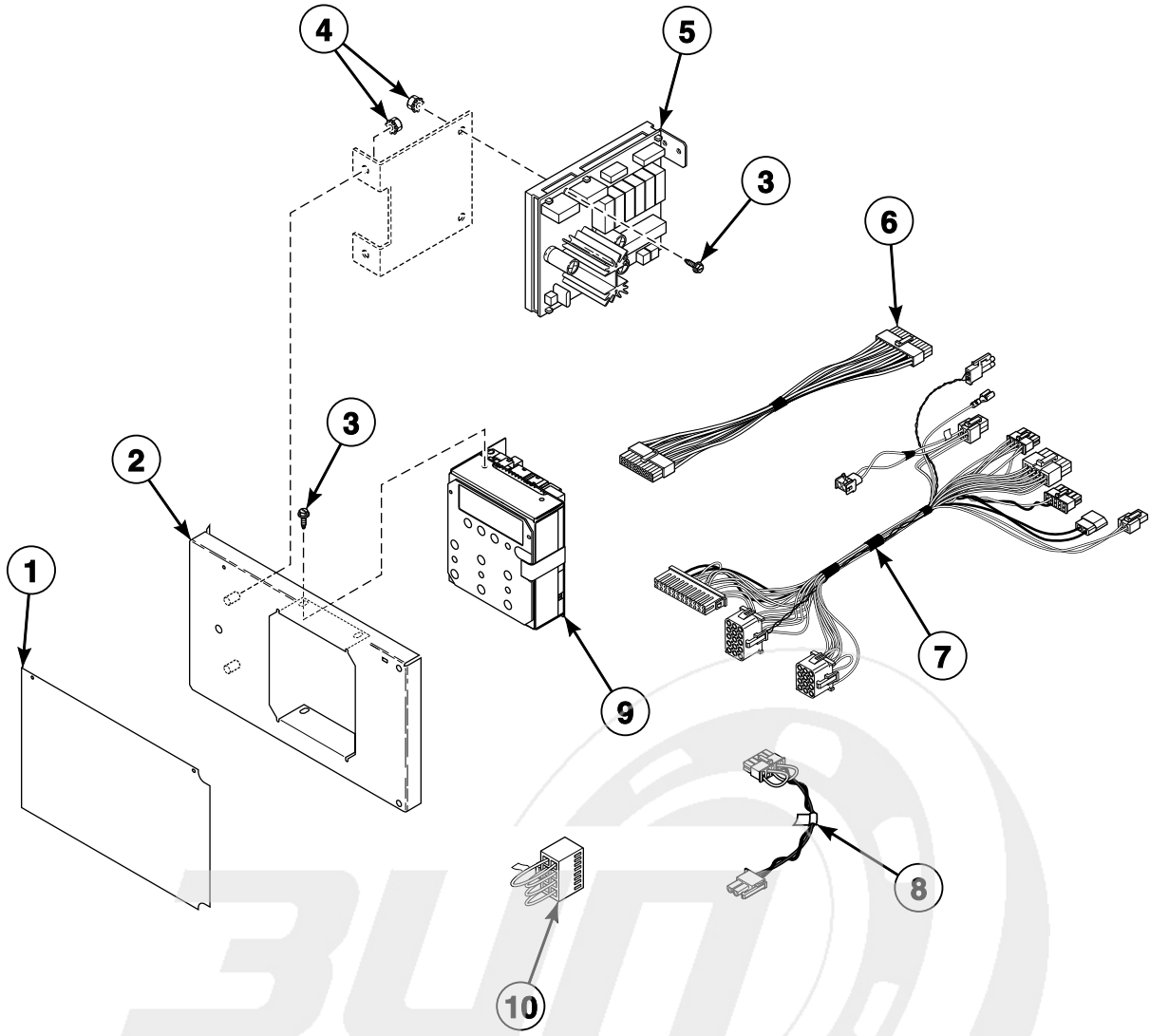

TMB3260P_70421801

info@zipnasklade.ru
8(800)500-69-51

© Copyright, Alliance Laundry Systems LLC – DO NOT COPY or TRANSMIT

LED OPL Control

REF	PART NO.	DESCRIPTION	COMMENTS
1	70445001	Overlay	S models; EO control suffix
	70445002	Overlay	S models; RE control suffix
	70445003	Overlay	H models; EO control suffix
	70445004	Overlay	H models; RE control suffix
	70462402	Overlay	C, D and I models; EO control suffix
	70462401	Overlay	C, D and I models; RE control suffix
	70462702	Overlay	U models; EO control suffix
	70462701	Overlay	U models; RE control suffix
	70462902	Overlay	G and K models; EO control suffix
	70462901	Overlay	G and K models; RE control suffix
	70472402	Overlay	P models; EO control suffix
	70472401	Overlay	P models; RE control suffix
	70472202	Overlay	L and Y models; EO control suffix
	70472201	Overlay	L and Y models; RE control suffix
2	70440901	Control Plate and Studs Assembly	
3	501524	Screw	
4	70054	Nut	
5	70434101P	Control Assembly	
6	44186101	Output Harness	Use between item 5 and item 8
7	44240301	Control Panel Harness	Goes from item 8 to main harness
8	70324604	Jumper Calibration Wire	
9	70454101P	Control Assembly	H, S and U models
	70437102P	Control Assembly	C, D and I models
	70437103P	Control Assembly	P models
	70437104P	Control Assembly	G and K models
	70437105P	Control Assembly	L and Y models
10	70364103	Bypass Harness	Non-CE models

info@zipnasklade.ru
8(800)500-69-51

© Copyright, Alliance Laundry Systems LLC – DO NOT COPY or TRANSMIT

Emergency Stop Button - CE Models

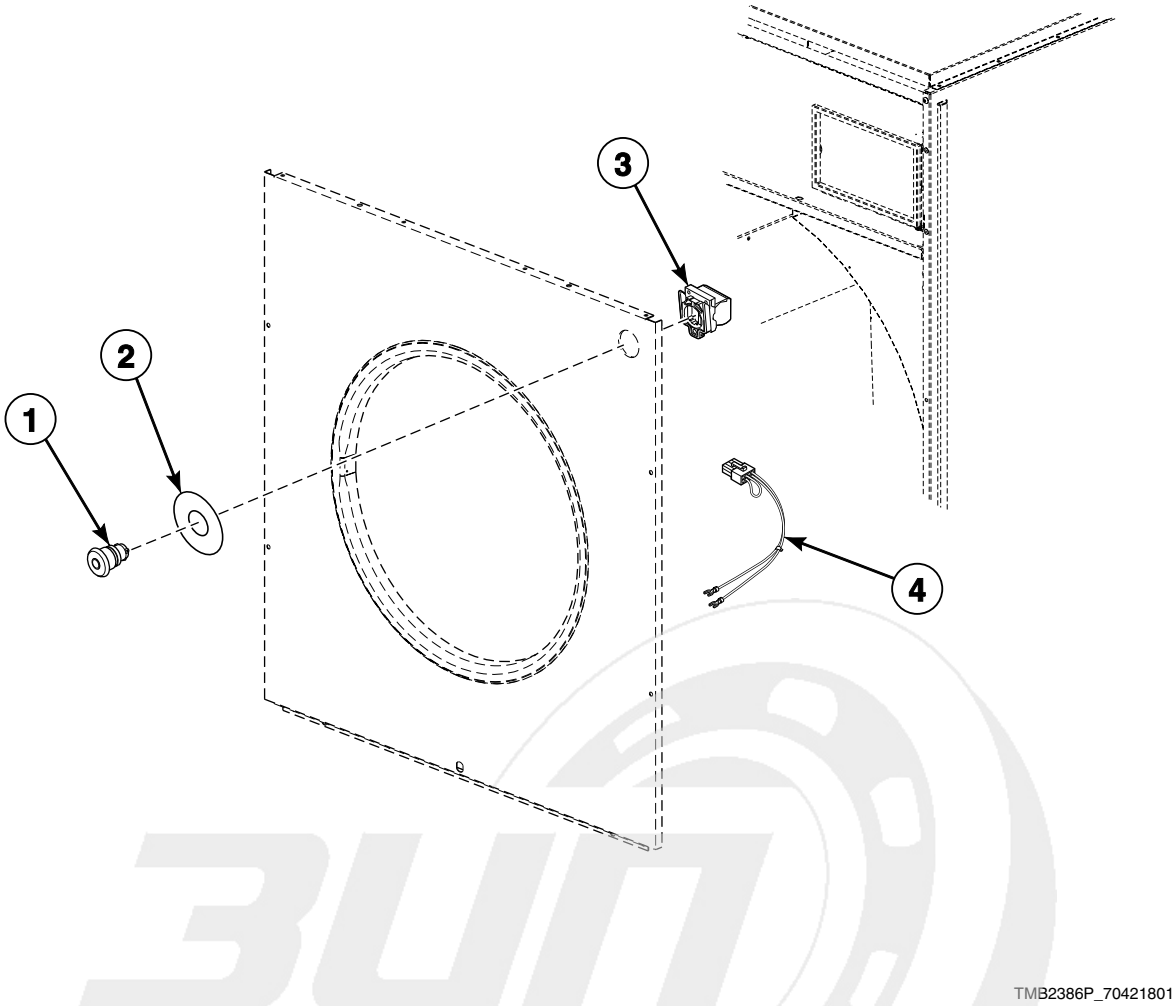

info@zipnasklade.ru
8(800)500-69-51

© Copyright, Alliance Laundry Systems LLC – DO NOT COPY or TRANSMIT

Emergency Stop Button - CE Models

REF	PART NO.	DESCRIPTION	COMMENTS
1	F200233500	Emergency Stop Pushbutton	
2	M412235	Emergency Stop Label	
3	F200233401	Contact Block Switch	
	F8069501	Contact Switch	
4	70364105P	Emergency Stop Contact Harness	1 contact
	70364106P	Emergency Stop Harness	2 contacts

info@zipnasklade.ru
8(800)500-69-51

© Copyright, Alliance Laundry Systems LLC – DO NOT COPY or TRANSMIT

Cabinet Front Components

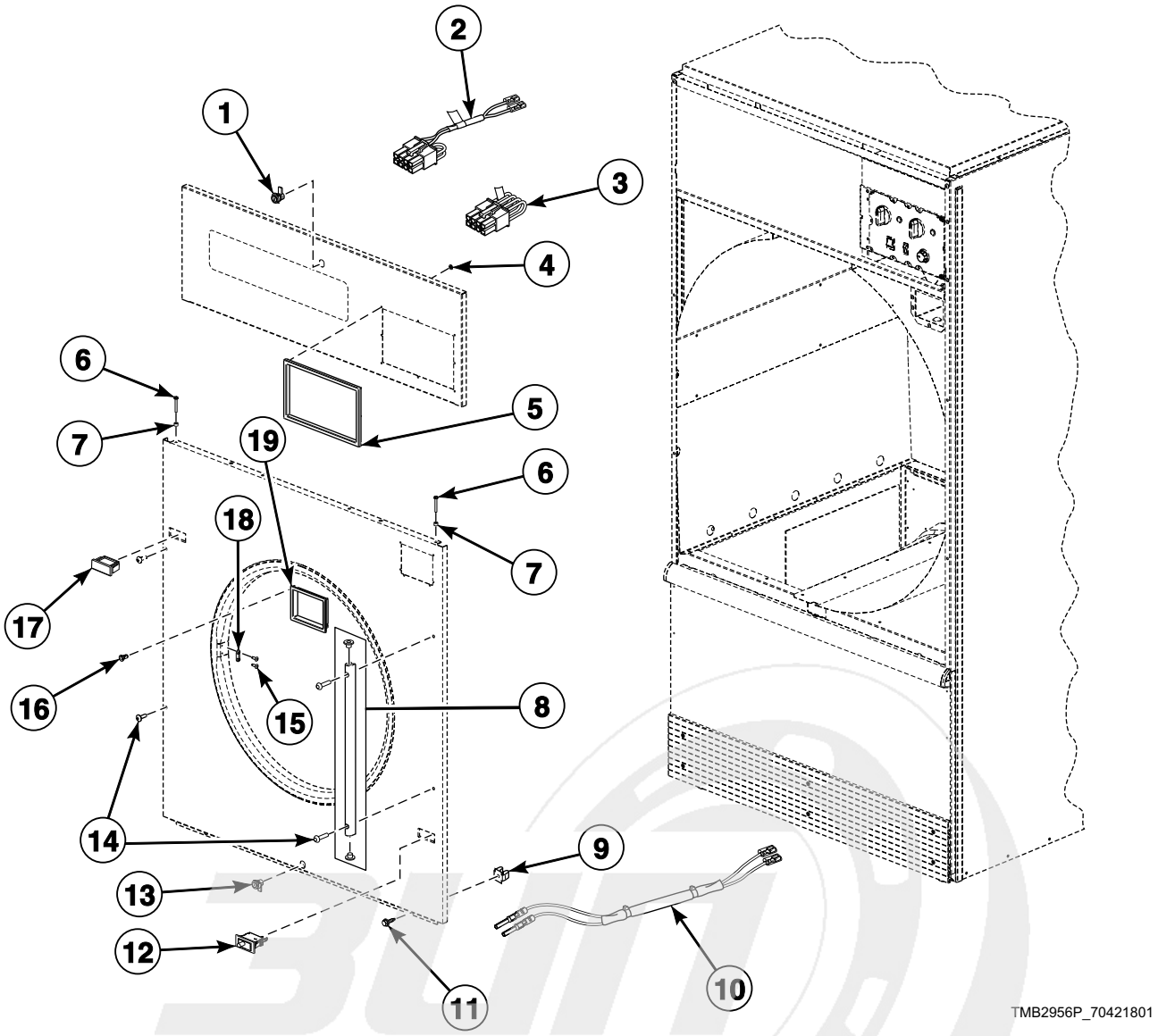

info@zipnasklade.ru
8(800)500-69-51

© Copyright, Alliance Laundry Systems LLC – DO NOT COPY or TRANSMIT

Cabinet Front Components

REF	PART NO.	DESCRIPTION	COMMENTS
	M4379P4	Tumbler Dolly Kit	
1	44089301P	Lock, Key and Nut Kit	RL001 key code; Control panel; Optional if same key is to be used for control lock
	70155601	Key	RL001
2	70364104P	Coin Vault Switch Harness	Coin; BC, BX, LC, LX, WC and WX control suffixes
3	70364103	Bypass Harness	OPL; 3O, 3V, 3X, BG, BL, BY, DO, DV, DX, EO, LY, OM, QT, R3, RD, RE, RM, RQ, RU, SD, SX, UO and WY control suffixes
4	M400977	Nut	8 required per control trim
5	44016301	Control Trim	H models
	44016401	Control Trim	G, K, L, P, S, U and Y models
6	70275801	Screw	4 required
7	56079	Panel Locator	2 required
8	44035001	Door Hinge Lug Assembly	
9	70030501	Expansion Clip	
10	44137601	Door Switch Harness	
11	M411072	Screw	4 required; Front panel; Bottom
12	70413301	Pushbutton Switch	Door switch
13	44089301P	Lock, Key and Nut Kit	RL001 key code; Lint panel; Optional if same key is to be used for control lock
	70155601	Key	RL001
	44089302P	Lock, Key and Nut Kit	RL002 key code; Lint panel; Standard coin and card models
	70155602	Key	RL002
14	70033502	Screw	4 required for painted panels; 2 required for stainless steel panels in addition to 2 of 70182601 Screw
	70182601	Screw	2 required for stainless steel panels in addition to 2 of 70033502 Screw
15	M400003	Pop Rivet	2 per door latch
16	M400972	Shadow Box Clip	6 required
17	44057801W	Switch Hole Plug	White
	44057801Q	Switch Hole Plug	Bisque
	44057801B	Switch Hole Plug	Black; For stainless steel and turquoise models
18	M401223	Door Latch	2 required
19	70117501	Coin Vault Trim	H models; Gray
	70117502	Coin Vault Trim	G, K, L, P, S, U and Y models; Black

info@zipnasklade.ru
8(800)500-69-51

© Copyright, Alliance Laundry Systems LLC – DO NOT COPY or TRANSMIT

Cabinet Panels and Nameplates

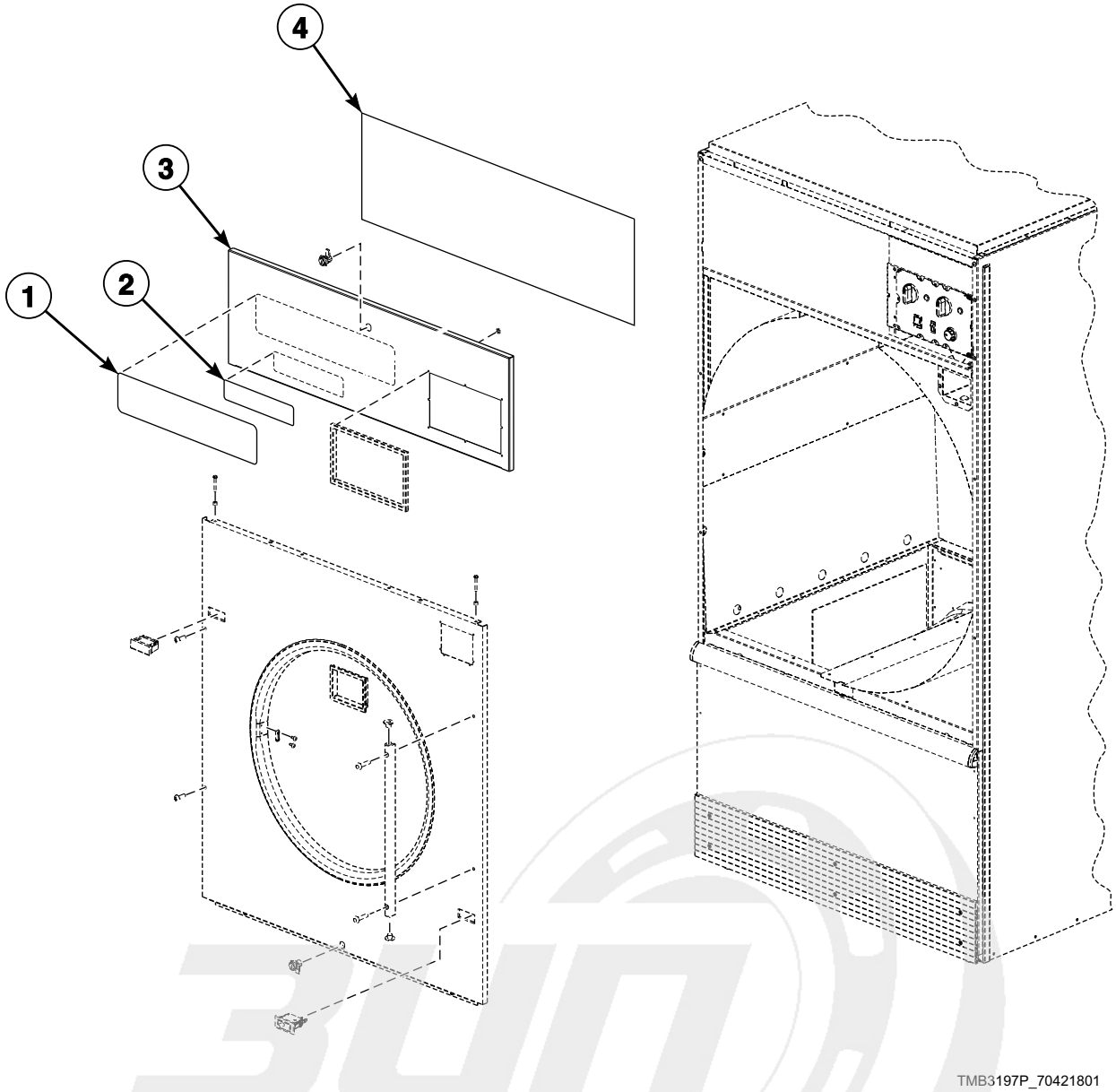

info@zipnasklade.ru
8(800)500-69-51

© Copyright, Alliance Laundry Systems LLC – DO NOT COPY or TRANSMIT

Cabinet Panels and Nameplates

REF	PART NO.	DESCRIPTION	COMMENTS
	M4776P3	Control Panel and Door Hinge Kit	D and I models; To change from old look to new look
1	44010401	Nameplate	H models
	44010601	Nameplate	S models
	44235401	Nameplate Overlay	U models
	B12389801	Nameplate	D and I models
	44062901	Nameplate	C models
	70380701	Nameplate Overlay	P models
	70243901	Nameplate	L models
	70410201	Nameplate Overlay	G models; OPL
	44130301	Nameplate Overlay	K models; OPL
	44104501	Nameplate Overlay	Y models
2	44129904	Nameplate	C models
3	44040001*P	Control Panel	C models; D and I models through 7/31/11; 3O, 3V, 3X, QT, R3 and RQ control suffixes; Manual
	44040002	Control Panel	C models; D and I models through 7/31/11; 3O, 3V, 3X, QT, R3 and RQ control suffixes; Manual; Stainless steel
	44040003*	Control Panel	C models; I models through 7/31/11; DO, DV and RD control suffixes; Electronic
	44040004	Control Panel	C models; I models through 7/31/11; DO, DV and RD control suffixes; Electronic; Stainless steel
	44040007B	Control Panel	D and I models starting 8/1/11 through 7/9/12
	44040008B	Control Panel	D and I models starting 7/10/12
	44040005*	Control Panel	G and K models; U models with RU and UO control suffixes
	44040006	Control Panel	G and K models; U models with RU and UO control suffixes; Stainless steel
	44000117BP	Control Panel	L models
	44000117*P	Control Panel	H, P, S and Y models; U models with all other control suffixes
	44000118P	Control Panel	H, P, S and Y models; U models with all other control suffixes; Stainless steel
4	44020601	Insulation	Used inside access panel

*** Add Letter To Designate Color. Q - Bisque W - White**

NOTE: All front panel assemblies include M401223 Door Latch and 2 of M400003 Pop Rivet

info@zipnasklade.ru
8(800)500-69-51

© Copyright, Alliance Laundry Systems LLC – DO NOT COPY or TRANSMIT

Front Panel Assemblies

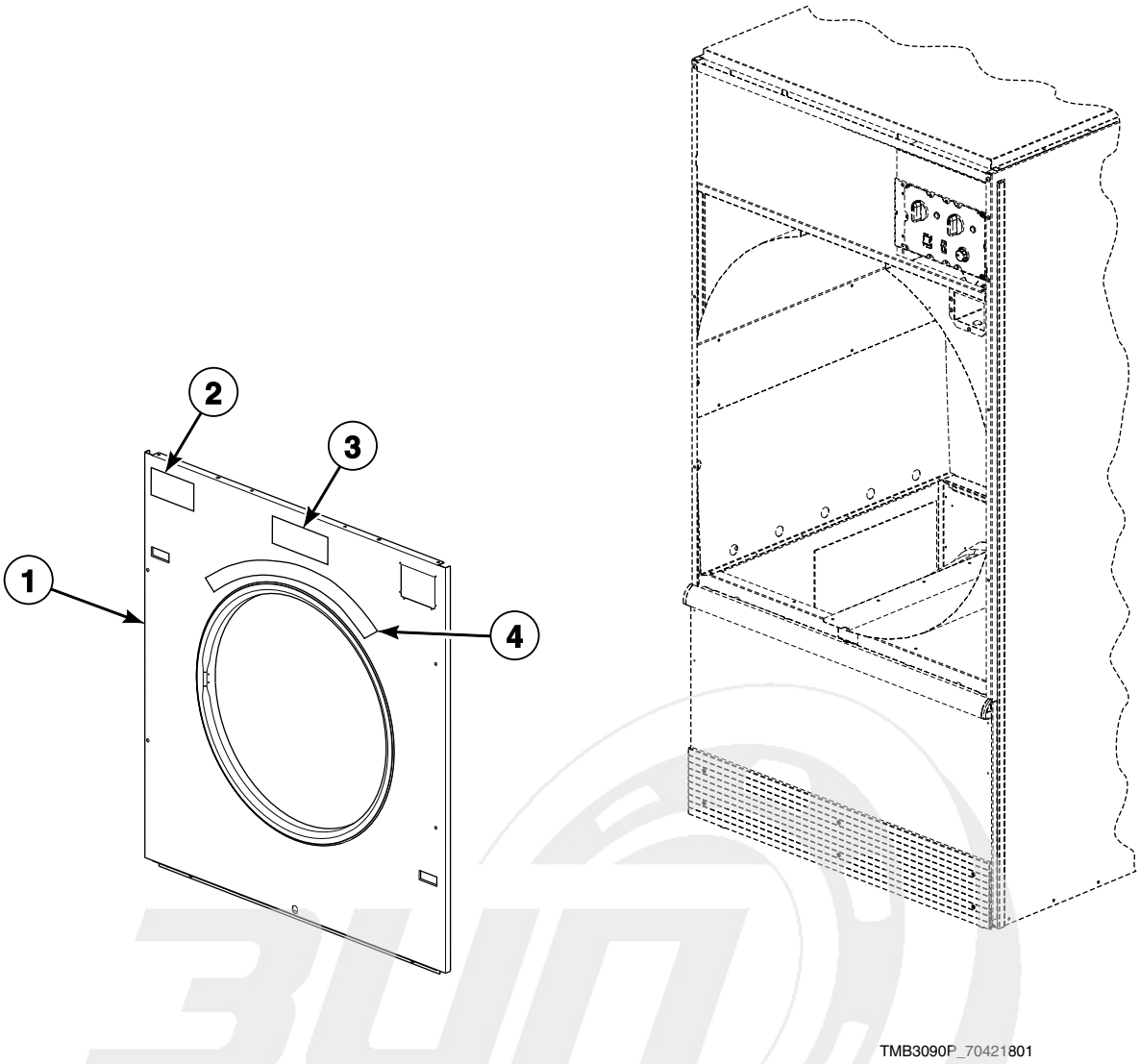

info@zipnasklade.ru
8(800)500-69-51

© Copyright, Alliance Laundry Systems LLC – DO NOT COPY or TRANSMIT

Front Panel Assemblies

REF	PART NO.	DESCRIPTION	COMMENTS
1	44077901*P	Front Panel Assembly	BB, BC, BW, BX, KB, KC, KW, KX, LB, LC, LW, LX, SD, SX, WB, WC, WW and WX control suffixes
	44077902P	Front Panel Assembly	BB, BC, BW, BX, KB, KC, KW, KX, LB, LC, LW, LX, SD, SX, WB, WC, WW and WX control suffixes; Stainless steel
	44077903*	Front Panel Assembly	BL, BY, BZ, WY and WZ control suffixes
	44077904P	Front Panel Assembly	BL, BY, BZ, WY and WZ control suffixes; Stainless steel
	44077905*P	Front Panel Assembly	Non-CE models; EO, OM, QT, RE, RM, RU, RQ and UO control suffixes
	44077906P	Front Panel Assembly	Non-CE models; EO, OM, QT, RE, RM, RU, RQ and UO control suffixes; Stainless steel
	44077907*P	Front Panel Assembly	CE models; 3O, EO, OM, QT, R3, RE, RM, RQ, RU and UO control suffixes
	44077908P	Front Panel Assembly	CE models; 3O, EO, OM, QT, R3, RE, RM, RQ, RU and UO control suffixes; Stainless steel
2	70414001	Label	G and K models; Coin
3	44128901	Fire Suppression System Label	G and K models
	44190901	Label	L and P models
	44108201	Label	C, D, H, I, S and U models
4	M410892	Warning Label	

*** Add Letter To Designate Color. Q - Bisque W - White**

NOTE: All front panel assemblies include M401223 Door Latch and 2 of M400003 Pop Rivet

info@zipnasklade.ru
8(800)500-69-51

© Copyright, Alliance Laundry Systems LLC – DO NOT COPY or TRANSMIT

Lint Panel Switch Assembly

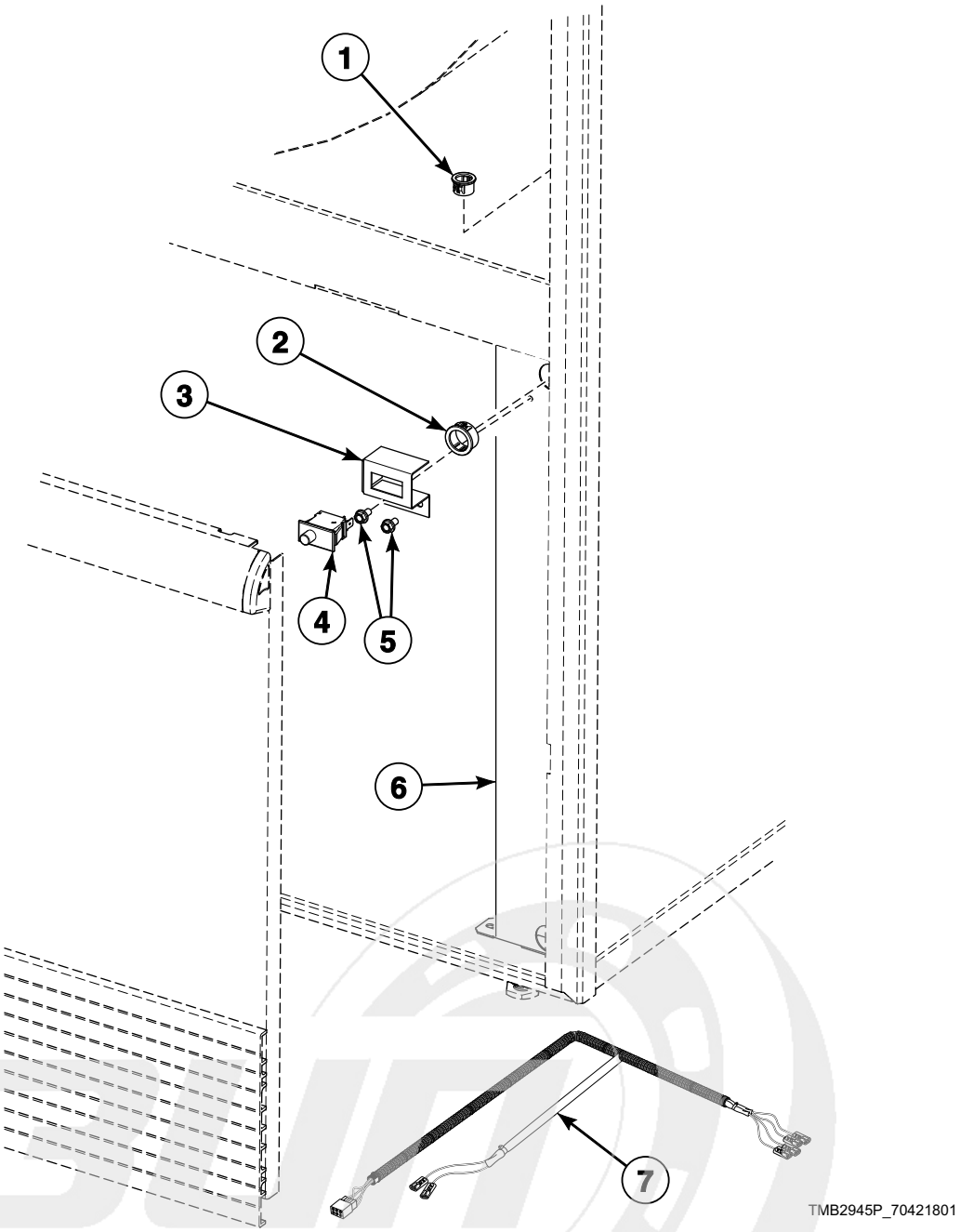

info@zipnasklade.ru
8(800)500-69-51

© Copyright, Alliance Laundry Systems LLC – DO NOT COPY or TRANSMIT

Lint Panel Switch Assembly

REF	PART NO.	DESCRIPTION	COMMENTS
1	M411826	Snap Bushing	
2	M400770	Snap Bushing	
3	44118601	Lint Panel Switch Bracket	
4	70413401	Switch Assembly	
5	430497	Screw	
6	44001201	Front Pillar	
7	44137501P	Base Harness Assembly	Also connects to thermistor and cabinet thermostat

info@zipnasklade.ru
8(800)500-69-51

© Copyright, Alliance Laundry Systems LLC – DO NOT COPY or TRANSMIT

Lower Cabinet Front Components

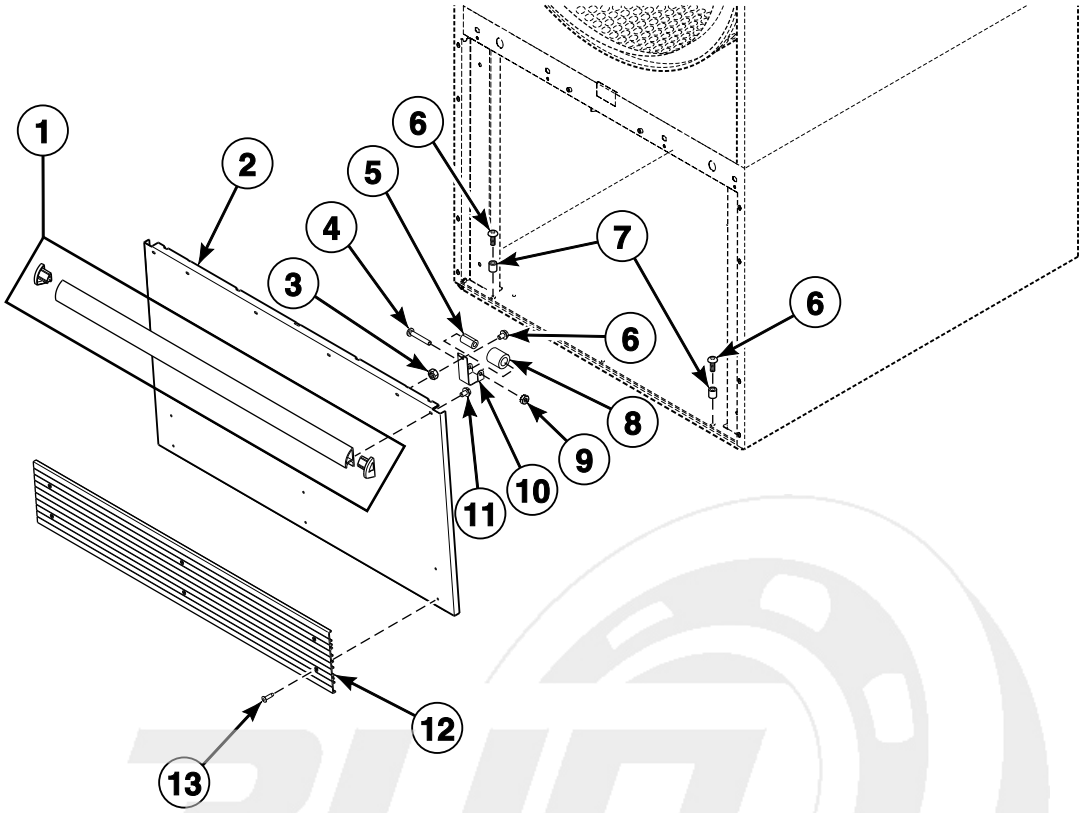

TMB2057P_70421801

info@zipnasklade.ru
8(800)500-69-51

© Copyright, Alliance Laundry Systems LLC – DO NOT COPY or TRANSMIT

Lower Cabinet Front Components

REF	PART NO.	DESCRIPTION	COMMENTS
	70114001	Clean Lint Compartment Sticker	Lint compartment must be cleaned daily
	70404001	Roller Bracket Assembly	Includes items 4, 5 and 8-10
1	70154405	Handle and Caps Assembly	C, D, I, L, P, S, U and Y models; Black; Includes endcaps
	70154406	Handle and Caps Assembly	H models; Gray; Includes endcaps
	70407202	Handle Bumper	G and K models; Black and blue; Does not include endcaps
2	44000001*P	Lint Panel	
	44000002P	Lint Panel	Stainless steel
3	51236	Nut	
4	70072801	Screw	
5	70030201	Roller Catch Spacer	
6	70132301	Screw	
7	56079	Panel Locator	
8	70297601	Roller Catch Wheel	
9	23951	Nut	
10	70030301	Roller Catch Arm	
11	430757	Screw	4 required
12	70117608	Kickplate	H models; Gray
	70117607	Kickplate	All other models; Black
13	70126401	Pop Rivet	H models; Gray; 6 required
	70126301	Pop Rivet	All other models; Black; 6 required

*** Add Letter To Designate Color. Q - Bisque W - White**

info@zipnasklade.ru
8(800)500-69-51

© Copyright, Alliance Laundry Systems LLC – DO NOT COPY or TRANSMIT

Cabinet Limit and Thermistor Assembly

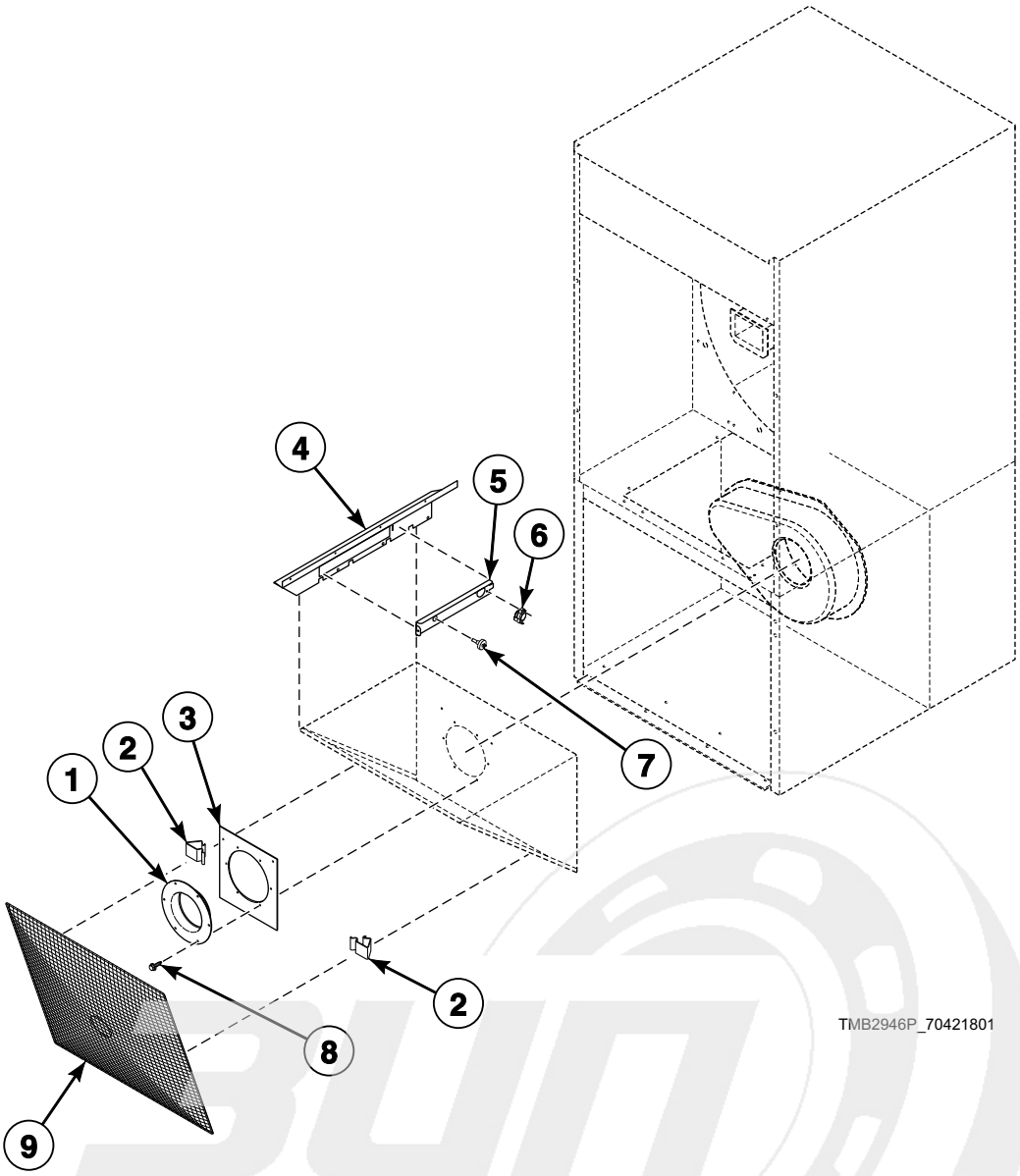

info@zipnasklade.ru
8(800)500-69-51

© Copyright, Alliance Laundry Systems LLC – DO NOT COPY or TRANSMIT

Cabinet Limit and Thermistor Assembly

REF	PART NO.	DESCRIPTION	COMMENTS
1	70014101	Blower Inlet Cone	Gas and steam 60 Hertz; Electric 60 Hertz/3 Phase
2	35865	Hold-Down Clip	2 required
3	44150201	Cone Plate	Gas and steam 60 Hertz; Electric 60 Hertz/3 Phase
4	44162201	Lint Screen Deflector	Use (2) 70335601 Cable Ties starting Serial No. 0904004427 to hold harness
5	44162301	Deflector Cover	
6	M411813	Limit Thermostat	Electric models
	M410542	Limit Thermostat	Non-CE and non-Australian gas models and all steam models
	M411941	Manual Reset Thermostat	CE and Australian gas models
7	M414704	Thermistor	
8	430497	Screw	Gas and steam 60 Hertz; Electric 60 Hertz/3 Phase; 6 required
9	44063601	Lint Screen	

info@zipnasklade.ru
8(800)500-69-51

© Copyright, Alliance Laundry Systems LLC – DO NOT COPY or TRANSMIT

Cabinet Components

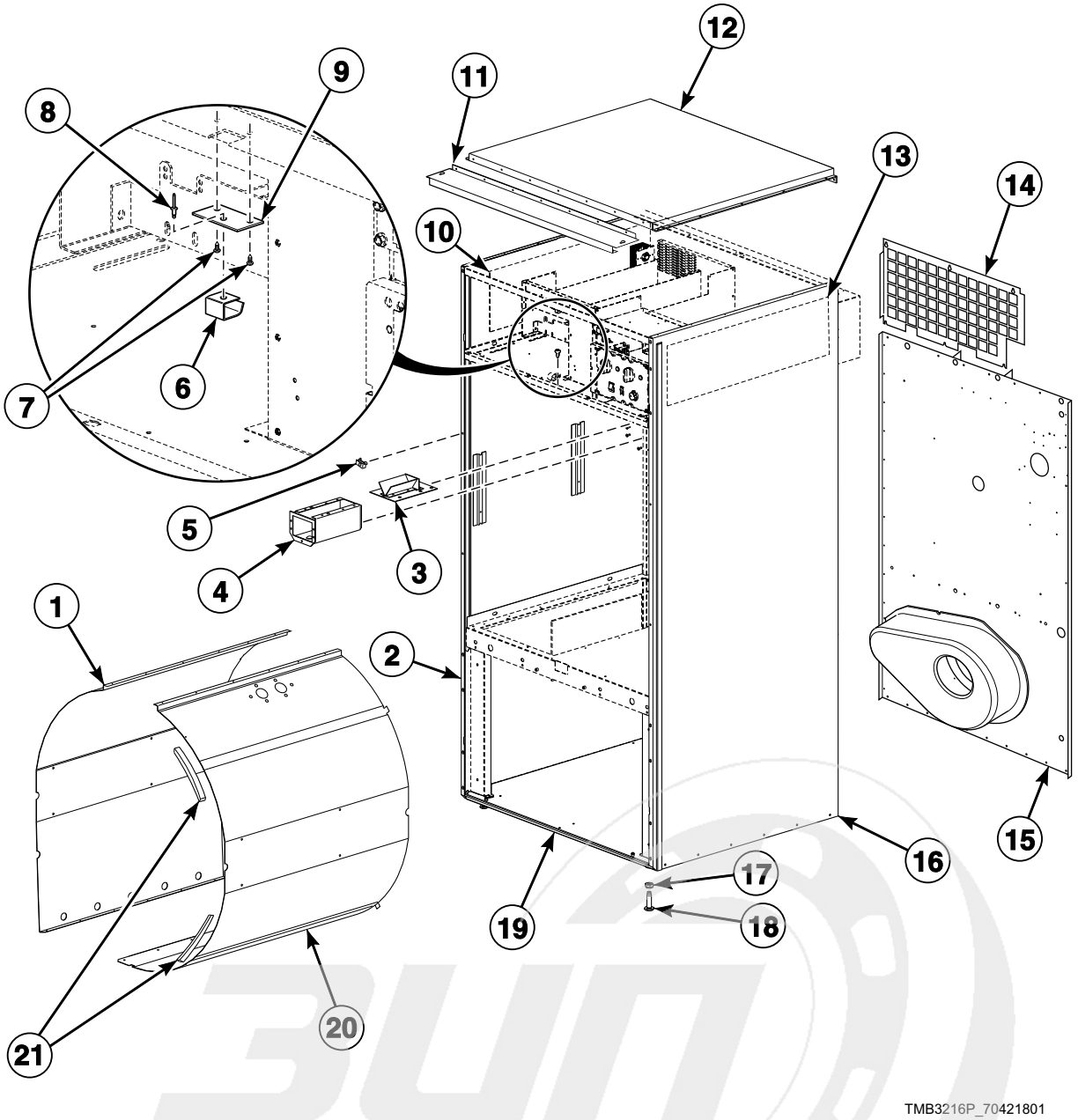

info@zipnasklade.ru
8(800)500-69-51

© Copyright, Alliance Laundry Systems LLC – DO NOT COPY or TRANSMIT

Cabinet Components

REF	PART NO.	DESCRIPTION	COMMENTS
	298P4P	Spray Paint	White
	122P4P	Porcelain Touch-Up Paint	White
	370P4P	Porcelain Touch-Up Paint	Bisque
1	44005201	Baffle	Left
2	44056801*	Side Panel and Bracket Assembly	Left
3	70296401	Coin Chute Assembly	Wide; Includes 6 of 70058502 Pop Rivet
4	70180101	Coin Vault Assembly	Includes 5 of 70058502 Pop Rivet
5	70030401	Nut	U-clip
6	431318	Control Door Latch	
7	431287	Screw	
8	M400003	Pop Rivet	
9	44003201	Latch Mounting Bracket	
10	44150102	Insulation	
11	44129401	Top Panel Bracket	Gas and electric models
12	44135001P	Top Cover Pan	Gas and electric models
	44139301	Top Cover	Steam models
13	44150103	Insulation	
14	44176201	Top Rear Panel	Gas and steam models
	44170501	Top Rear Panel	Electric models
15	44170401P	Rear Panel Assembly	
	N/A	Rear Panel Assembly	Bolt on angle option
16	44056701*	Side Panel	Right
17	21899	Nut	Right
18	70247701	Screw	Leveling leg
19	44000601P	Bottom Pan	
20	44004901	Baffle	Right
	44065501	Baffle	Right; Models equipped with fire suppression system
21	70015701	Baffle Gasket	

*** Add Letter To Designate Color. Q - Bisque W - White**
N/A = Part no longer available

info@zipnasklade.ru
8(800)500-69-51

© Copyright, Alliance Laundry Systems LLC – DO NOT COPY or TRANSMIT

Door and Hinge Components

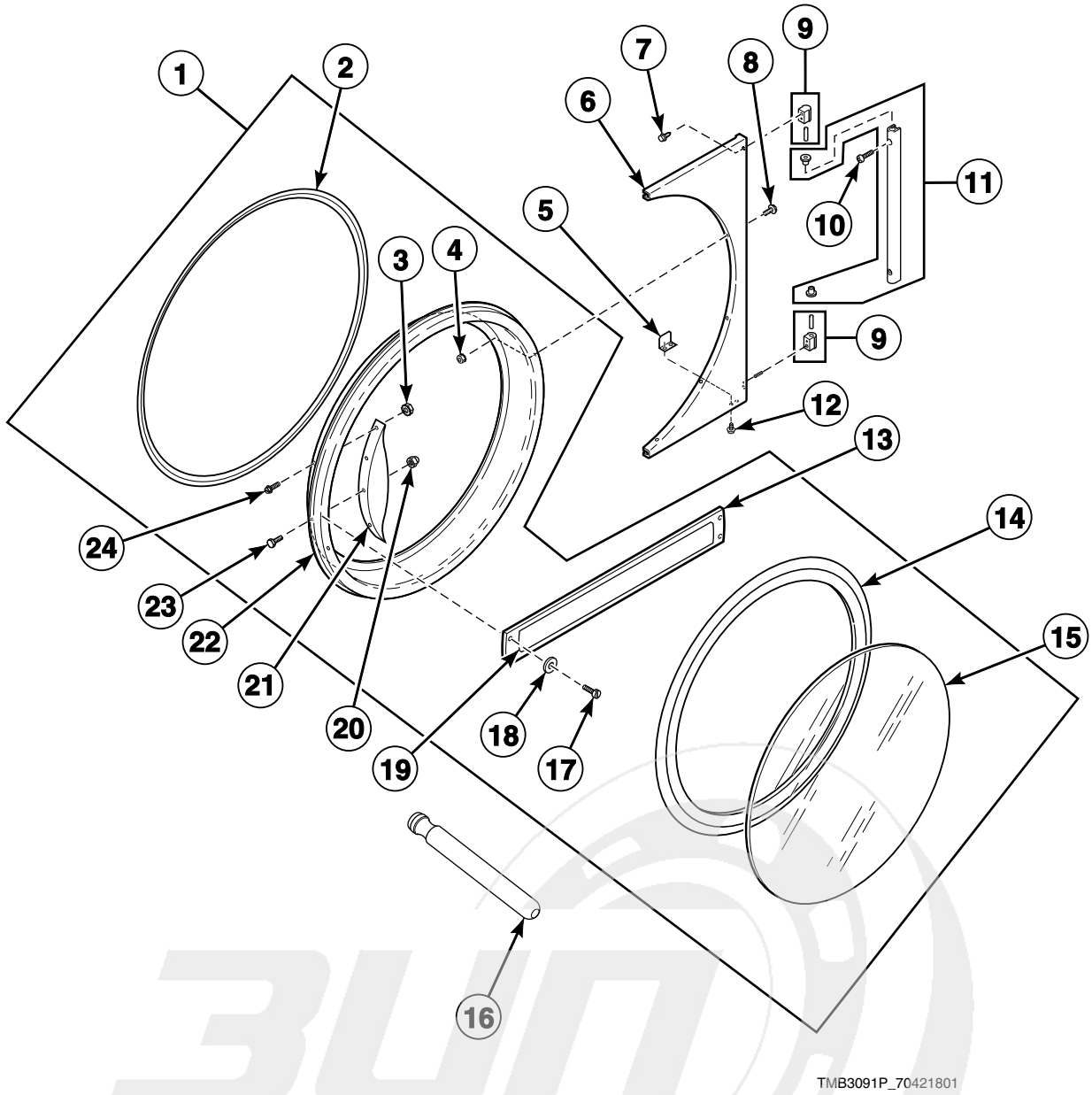

info@zipnasklade.ru
8(800)500-69-51

© Copyright, Alliance Laundry Systems LLC – DO NOT COPY or TRANSMIT

Door and Hinge Components

REF	PART NO.	DESCRIPTION	COMMENTS
	M4776P3	Control Panel and Door Hinge Kit	D and I models; To change from old look to new look
1	44058102P	Door Assembly	H models
	44028902P	Door Assembly	S and U models
	44112101	Door Assembly	C, D and I models through 7/31/11
	44028903	Door Assembly	C, D and I models starting 8/1/11
	44029101	Door Assembly	L and P models
	70407401	Door Assembly	G and K models
2	44008201P	Door Ring Gasket	
3	44071201	Nut	H, S and U models; 4 required
4	23951	Nut	6 required
5	70215001P	Door Switch Actuator Kit	
6	44075208B	Door Hinge Assembly	G and K models; D and I models starting 8/1/11
	44075203*	Door Hinge Assembly	H, L, P, S, U and Y models; C models starting 8/1/11
	44075204	Door Hinge Assembly	C, H, L, P, S, U and Y models; D and I models through 7/31/11; Stainless steel
7	70442101	Screw	3 required
8	M400044	Screw	6 required
9	M4773P3	Cam and Hinge Kit	G and K models; D and I models starting 8/1/11
	M4772P3	Cam and Hinge Kit	C, H, L, P, S, U and Y models; D and I models through 7/31/11
10	70409801	Screw	G and K models; D and I models starting 8/1/11; 2 required
	70033502	Screw	C, H, L, P, S, U and Y models; D and I models through 7/31/11; 2 required
11	44035002	Door Hinge Lug Assembly	G and K models; D and I models starting 8/1/11
	44035001	Door Hinge Lug Assembly	C, H, L, P, S, U and Y models; D and I models through 7/31/11
12	70058501	Pop Rivet	2 required
13	70399501B	Handle Bar	G and K models
14	70211902P	Door Seal Kit	Use Loctite 414 for seal
15	44008402P	Door Glass	H models
	44008401P	Door Glass	All other models
16	M4221P4	Door Glass Installation Tool	
17	70126301	Pop Rivet	G and K models; 4 required
18	70409301	Washer	G and K models; 2 required
19	70411401	Nameplate Overlay	G models; Coin
	44144401	Nameplate Overlay	K models; Coin
20	M414215	Nut	
21	44057702	Door Handle	H models
	44007901	Door Handle	S and U models; C, D and I models starting 8/1/11
22	44007702	Door Ring Assembly	H, L, P, S and U models
	44112001	Door Ring and Handle Assembly	C, D and I models through 7/31/11
	44007704B	Door Ring	C, D and I models starting 8/1/11
	44007703B	Door Ring	G and K models
23	M400661	Screw	Door strike
24	61199	Screw	H, S and U models; 4 required

*** Add Letter To Designate Color. L - Almond Q - Bisque W - White**

info@zlphaskladn.ru
8(800)500-69-51

© Copyright, Alliance Laundry Systems LLC – DO NOT COPY or TRANSMIT

Cylinder and Trunnion Components

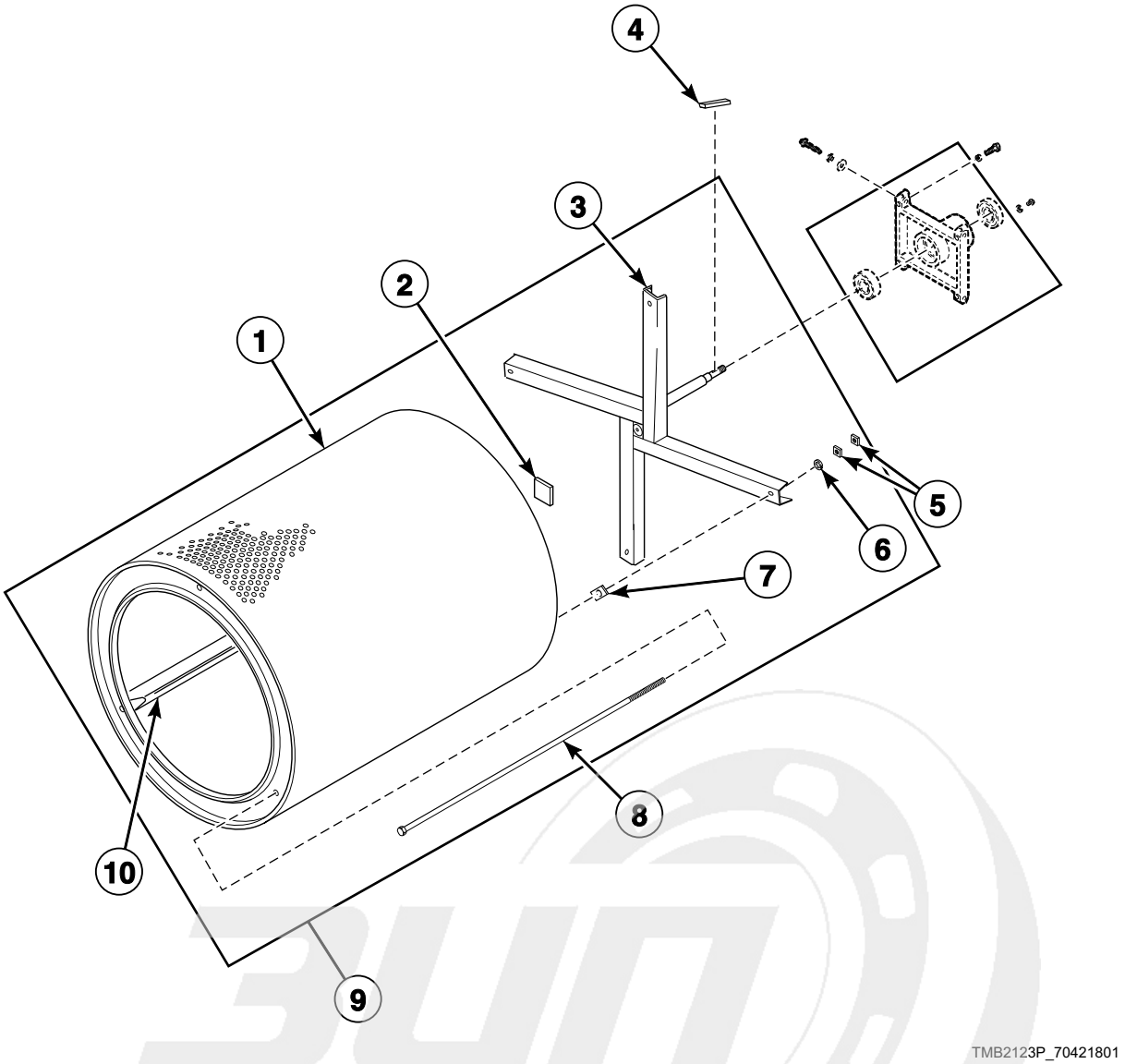

info@zipnasklade.ru
8(800)500-69-51

© Copyright, Alliance Laundry Systems LLC – DO NOT COPY or TRANSMIT

Cylinder and Trunnion Components

REF	PART NO.	DESCRIPTION	COMMENTS
	44208601	Rib Wire	Moisture sensing
	44208701	Shaft Wire	Moisture sensing
1	44057001P	Cylinder Kit	Galvanized; C, D, H, I, L, P, S and U models; Non-moisture sensing
	44196301	Cylinder Assembly	Galvanized; C, D, H, I, L, P, S and U models; Moisture sensing
	44057101P	Cylinder Kit	Stainless steel; C, D, H, I, L, P, S and U models; Non-moisture sensing
	44196302	Cylinder Assembly	Stainless steel; C, D, H, I, L, P, S and U models; Moisture sensing
	44130802	Cylinder Assembly	G and K models; Non-moisture sensing
	44196303	Cylinder Assembly	G and K models; Moisture sensing
	44089001	Cylinder Assembly	Stainless steel; U models with the 11th character of R; Non-moisture sensing
2	M402144	Felt Pad	
3	44261801	Trunnion Kit	Spider; Nonreversing
	M413836	Trunnion Assembly	Spider; Reversing; Models through 1/31/12
	44208001	Trunnion Assembly	Spider; Models starting 2/1/12; Non-moisture sensing; *NOTE
	44207901	Trunnion Assembly	Models starting 8/1/11; Moisture sensing; *NOTE
4	M400008	Key	Half moon; Nonreversing models through 7/31/11; All models starting 8/1/11
	M405232	Key	Straight; Reversing; Models through 7/31/11
5	M404993	Nut	
6	91200	Washer	4 required
7	M401402	Spacer	Adjustment between cylinder and trunnion
8	M401411	Rib Rod	
9	44057401P	Cylinder and Trunnion Assembly	Galvanized; Nonreversing; C, D, H, I, L, P, S and U models through 7/31/11
	44057402P	Cylinder and Trunnion Assembly	Stainless steel; Nonreversing; C, D, H, I, L, P, S and U models through 7/31/11
	44057403	Cylinder and Trunnion Assembly	Galvanized; Reversing; C, D, H, I, L, P, S and U models through 1/31/12
	44057404	Cylinder and Trunnion Assembly	Stainless steel; Reversing; C, D, H, I, L, P, S and U models through 1/31/12
	44195601	Cylinder and Trunnion Assembly	Galvanized; C, D, H, I, L, P, S and U models starting 2/1/12; Non-moisture sensing
	44195605	Cylinder and Trunnion Assembly	Galvanized; C, D, H, I, L, P, S and U models; Moisture sensing
	44195602	Cylinder and Trunnion Assembly	Stainless steel; C, D, H, I, L, P, S and U models starting 2/1/12; Non-moisture sensing
	44195606	Cylinder and Trunnion Assembly	Stainless steel; C, D, H, I, L, P, S and U models; Moisture sensing
	44131002	Cylinder and Trunnion Assembly	Reversing; G and K models through 7/31/11
	44131102	Cylinder and Trunnion Assembly	Nonreversing; G and K models through 7/31/11
	44195603	Cylinder and Trunnion Assembly	G and K models starting 8/1/11; Non-moisture sensing
	44195607	Cylinder and Trunnion Assembly	G and K models; Moisture sensing
	44089101	Cylinder and Trunnion Assembly	Stainless steel; U models with the 11th character of R through 7/31/11
	44195604	Cylinder and Trunnion Assembly	Stainless steel; U models with the 11th character of R starting 8/1/11; Non-moisture sensing
10	44191201	Cylinder Rib Assembly	Moisture sensing

*** NOTE: Use on reversing and nonreversing models**

info@zipnaskladu.ru
8(800)500 69 51

© Copyright, Alliance Laundry Systems LLC – DO NOT COPY or TRANSMIT

Bearing Components

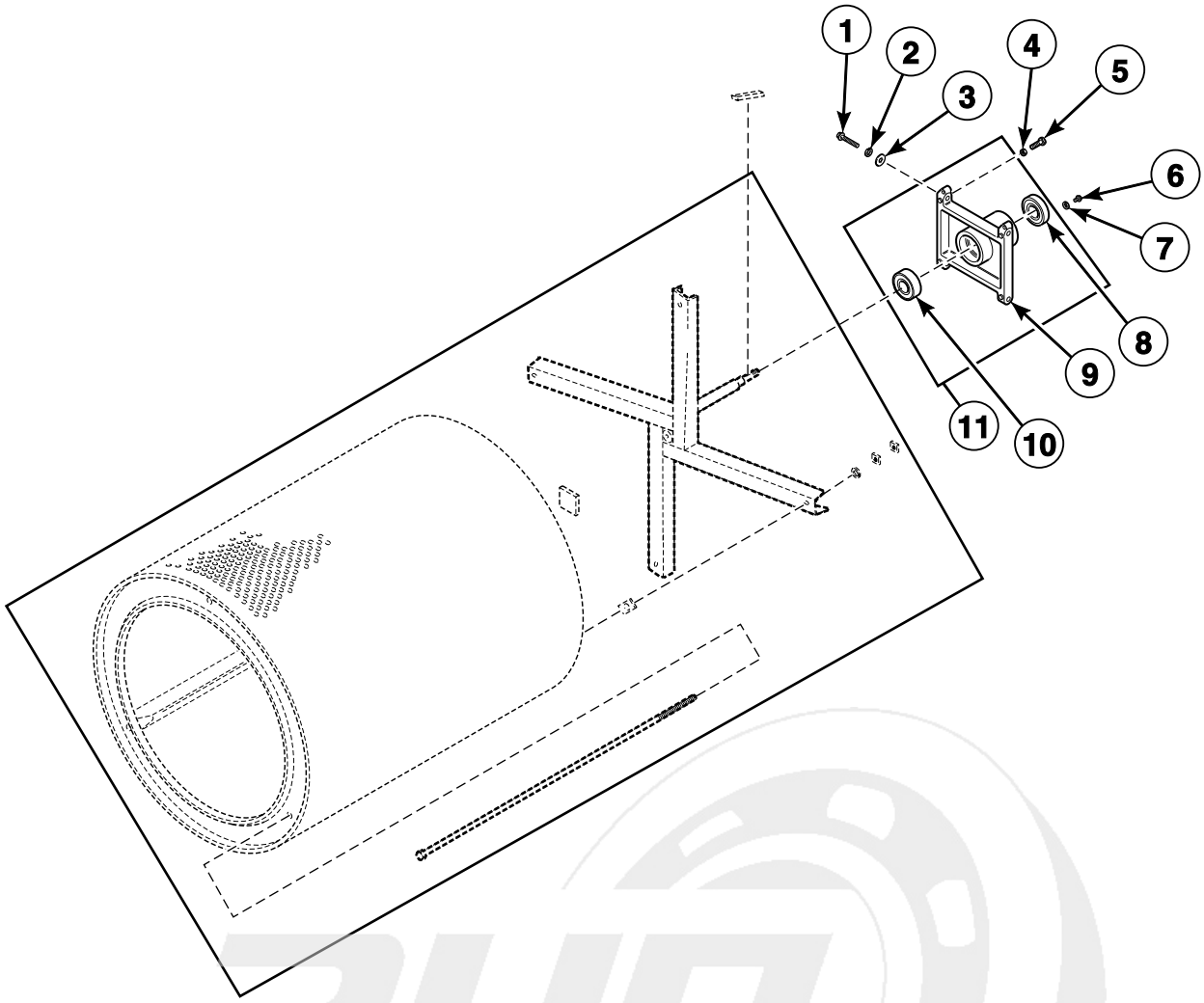

TMB2123PA_70421801

info@zipnasklade.ru
8(800)500-69-51

© Copyright, Alliance Laundry Systems LLC – DO NOT COPY or TRANSMIT

Bearing Components

REF	PART NO.	DESCRIPTION	COMMENTS
	M4640P3	Trunnion and Bearing Assembly	Nonreversing; Models through 7/31/11
	M4641P3	Trunnion and Bearing Assembly	Reversing; Models through 7/31/11
	M4644P3	Housing and Trunnion Assembly	Includes bearing; Nonreversing; Models through 7/31/11
	M4645P3	Housing and Trunnion Assembly	Includes bearing; Reversing; Models through 7/31/11
1	M400063	Screw	4 required
2	91200	Washer	4 required
3	70261401	Washer	4 required
4	M400026	Nut	4 required
5	M400650	Bolt	2 required
6	70187201	Screw	4 required
7	20103	Washer	4 required
8	F100136P	Bearing	
9	M413826	Trunnion Housing	
10	44041901P	Ball Bearing	
11	M413832	Trunnion Housing Assembly	Includes bearing

info@zipnasklade.ru
8(800)500-69-51

© Copyright, Alliance Laundry Systems LLC – DO NOT COPY or TRANSMIT

Reversing Cylinder Drive Motor and Components

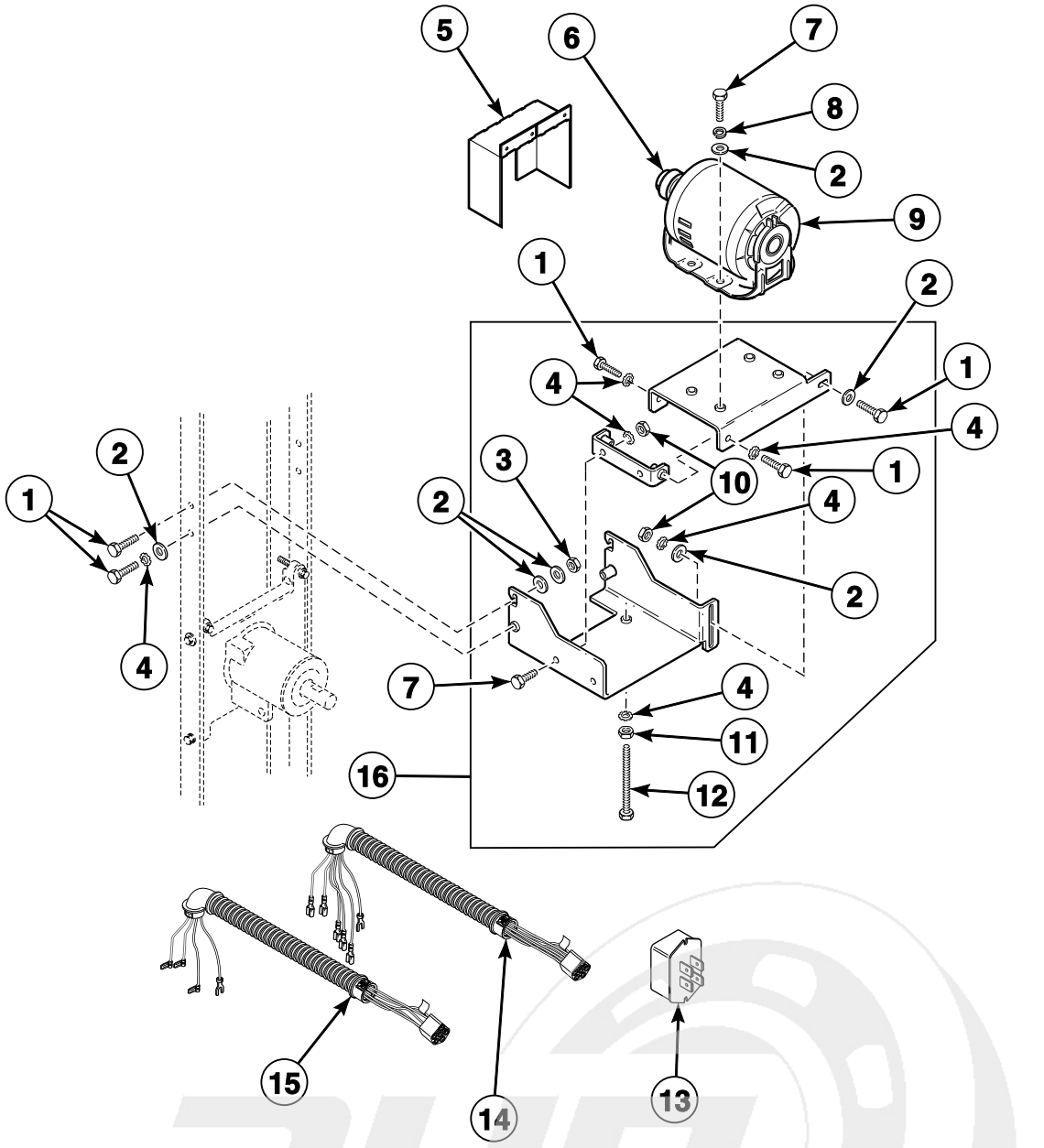

info@zipnasklade.ru
8(800)500-69-51

© Copyright, Alliance Laundry Systems LLC – DO NOT COPY or TRANSMIT

Reversing Cylinder Drive Motor and Components

REF	PART NO.	DESCRIPTION	COMMENTS
1	M400056	Screw	7 required
2	M400080	Washer	10 required
3	M412986	Nut	2 required
4	02834	Washer	8 required
5	M413541	Belt Guard	Upper
6	M414565	Pulley	60 Hertz
	M414567	Pulley	50 Hertz; Non-moisture sensing models through 1/31/12
	44233601	Pulley	50 Hertz; Moisture sensing models starting 8/1/11; Non-moisture sensing models starting 2/1/12
7	M400057	Screw	6 required
8	M400013	Washer	4 required
9	M412519P	Motor Kit	Gas and steam models with: 200-208 or 240 Volt/60 Hertz/3 Phase, 460-480 Volt/60 Hertz/3 Phase, 200 Volt/50 Hertz/3 Phase, 230 or 240 Volt/50 Hertz/3 Phase and 380 or 400-415 Volt/50 Hertz/3 Phase; Electric models with: 200-208 Volt/60 Hertz/3 Phase, 240 Volt/50 or 60 Hertz/3 Phase, 480 Volt/60 Hertz/3 Phase, 200 Volt/50 Hertz/3 Phase, 380 Volt/50 Hertz/3 Phase and 400-415/50 Hertz/3 Phase
	M412520P	Motor Kit	Gas and steam models with: 230-240 Volt/50 Hertz/1 Phase; Electric models with: 240 Volt/50 Hertz/1 Phase
10	70142	Nut	3 required
11	02428	Nut	
12	M413565	Screw	
13	M414563	Motor Switch	1 Phase
14	44139701P	Cylinder Motor Harness	1 Phase
15	44137101P	Cylinder Motor Harness	3 Phase
16	M413617	Motor Mount Assembly	Includes items 1-4, 7 and 10-12

info@zipnasklade.ru
8(800)500-69-51

© Copyright, Alliance Laundry Systems LLC – DO NOT COPY or TRANSMIT

Drive Components for Non-Moisture Sensing Reversing Models Through 1/31/12

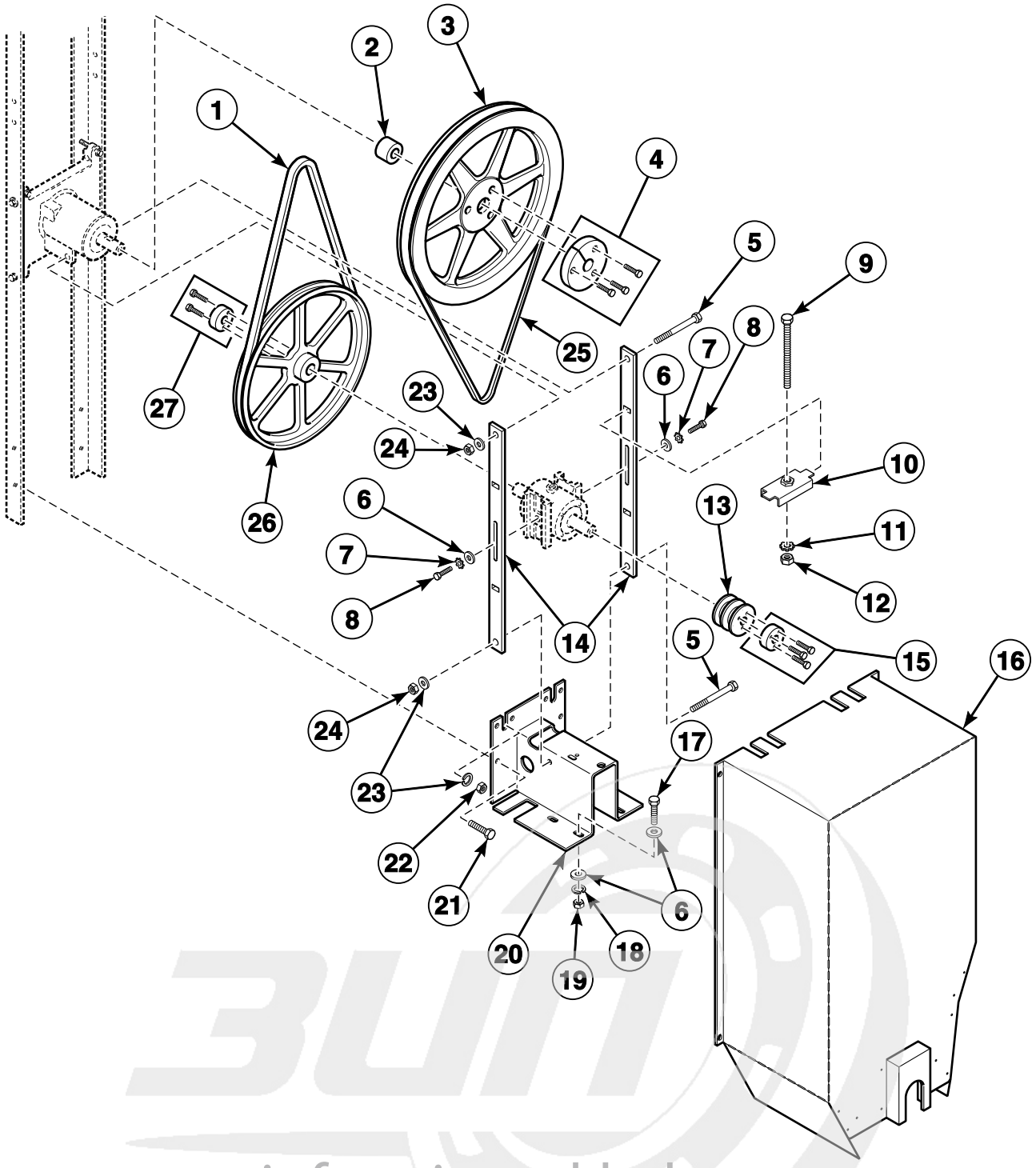

info@zipnasklade.ru
8(800)500-69-51

© Copyright, Alliance Laundry Systems LLC – DO NOT COPY or TRANSMIT

Drive Components for Non-Moisture Sensing Reversing Models Through 1/31/12

REF	PART NO.	DESCRIPTION	COMMENTS
1	M412981	Belt	Drive
2	44024001	Spacer	
3	M412916	Double V Sheave	
4	M412086P	Bushing	Includes M400013 Washer, 44048902 Screw and 44079203 Screw
5	M400061	Screw	
6	M400080	Washer	
7	M403958	Washer	2 required
8	M400043	Screw	
9	M412627	Screw	
10	M414405	Tension Plate Assembly	
11	M412188	Washer	
12	H88412101	Nut	
13	M412884	Pulley	
14	M412476	Guide Rail	
15	M412917P	Bushing	Includes 56552 Washer, 44048901 Screw and 44079301 Screw
16	44132402	Belt Guard Assembly	Use 51780 Screw to mount
17	M400057	Screw	
18	M400013	Washer	4 required
19	02428	Nut	4 required
20	44117201	Motor Bracket	
21	M401393	Bolt	2 required
22	20274	Nut	
23	M400014	Washer	
24	M400026	Nut	2 required
25	M412090	Belt	2 required; Cylinder
26	M412931	Single V Sheave	
27	M412885P	Bushing	Includes 03189 Washer and 44079201 Screw

info@zipnasklade.ru
8(800)500-69-51

© Copyright, Alliance Laundry Systems LLC – DO NOT COPY or TRANSMIT

Drive Components for Moisture Sensing Reversing Models Starting 8/1/11 and Non-Moisture Sensing Reversing Models Starting 2/1/12

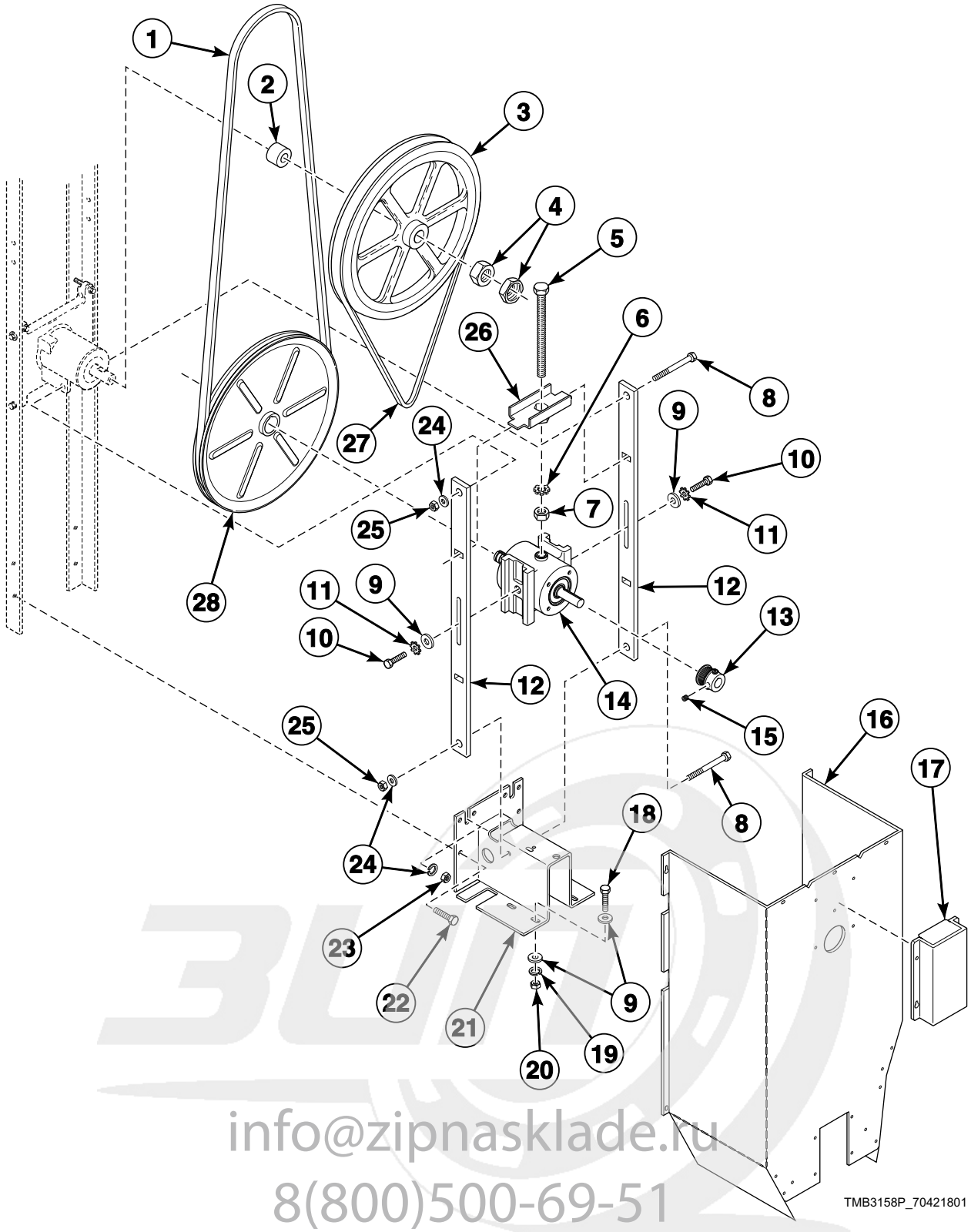

info@zipnasklade.ru
8(800)500-69-51

© Copyright, Alliance Laundry Systems LLC – DO NOT COPY or TRANSMIT

Drive Components for Moisture Sensing Reversing Models Starting 8/1/11 and Non-Moisture Sensing Reversing Models Starting 2/1/12

REF	PART NO.	DESCRIPTION	COMMENTS
	44209001	Belt Idler Assembly	Includes items 5-7, 9-15 and 26
1	M412981	Belt	
2	44024001	Spacer	
3	M412156	Micro V Sheave	
4	M400035	Nut	
5	M412627	Screw	
6	M412188	Washer	
7	H88412101	Nut	
8	M400061	Screw	
9	M400080	Washer	
10	M400043	Screw	
11	M403958	Washer	
12	M412476	Guide Rail	
13	M411466P	Micro V Pulley	
14	44107101	Idler Housing Assembly	
15	M400077	Screw	
16	44132409	Belt Guard Assembly	Use 51780 Screw to mount; Moisture sensing
	44132402	Belt Guard Assembly	Use 51780 Screw to mount; Non-moisture sensing
17	44222501	Guard Extension	
18	M400057	Screw	
19	M400013	Washer	
20	02428	Nut	
21	44117201	Motor Bracket	
22	M401393	Bolt	
23	20274	Nut	
24	M400014	Washer	
25	M400026	Nut	
26	M414405	Tension Plate Assembly	
27	M411425P	Micro V Belt	
28	44086901P	Sheave Kit	

info@zipnasklade.ru
8(800)500-69-51

© Copyright, Alliance Laundry Systems LLC – DO NOT COPY or TRANSMIT

Drive Components for Nonreversing Models Through 7/31/11

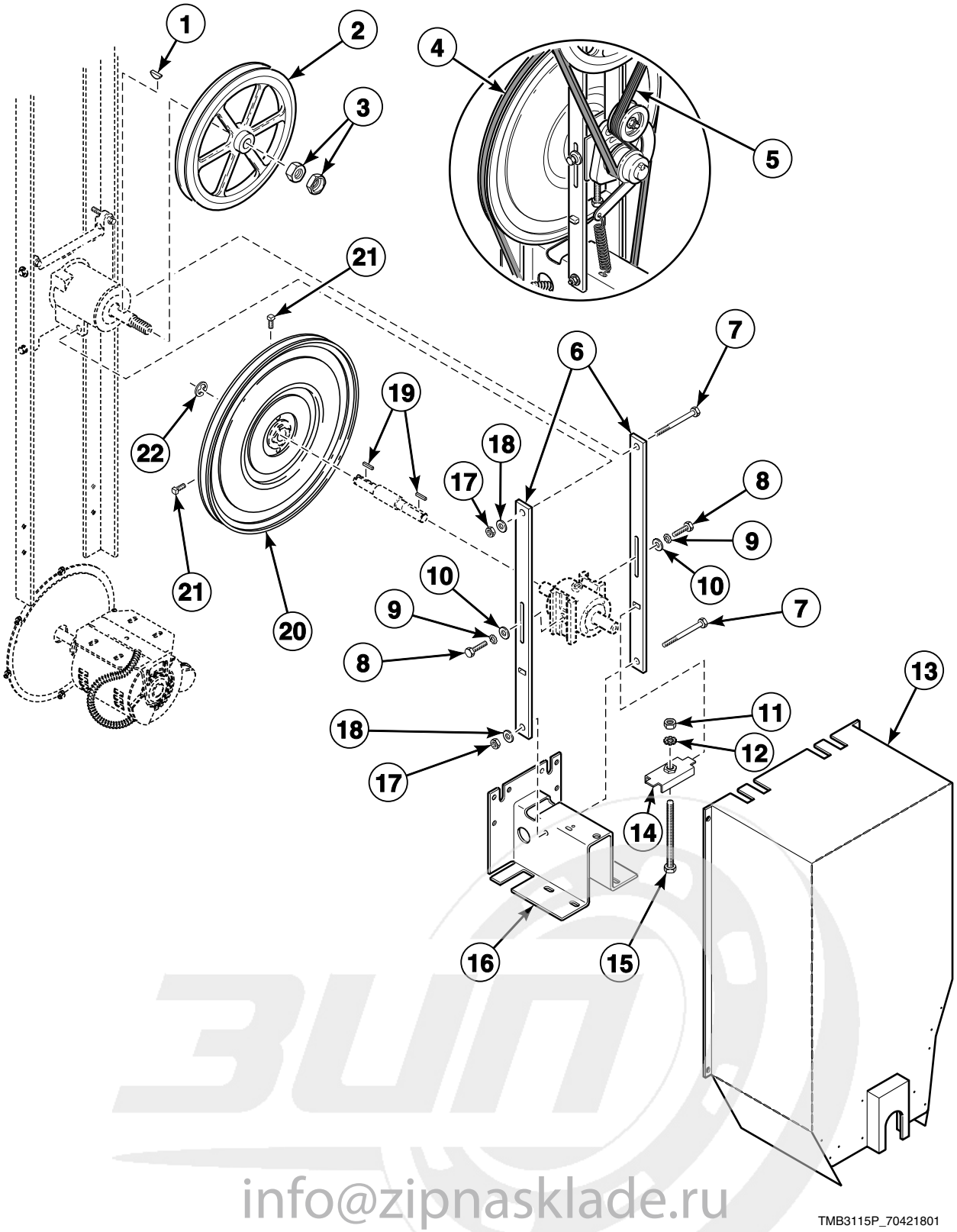

info@zipnasklade.ru
8(800)500-69-51

© Copyright, Alliance Laundry Systems LLC – DO NOT COPY or TRANSMIT

Drive Components for Nonreversing Models Through 7/31/11

REF	PART NO.	DESCRIPTION	COMMENTS
1	M400008	Key	
2	M412156	Micro V Sheave	
3	M400035	Nut	
4	M401182P	Belt	
5	M411425P	Micro V Belt	
6	M412476	Guide Rail	
7	M400061	Screw	
8	M400043	Screw	
9	M403958	Washer	
10	M400080	Washer	
11	H88412101	Nut	
12	M412188	Washer	
13	44132401	Belt Guard Assembly	Use 51780 Screw to mount
14	M414405	Tension Plate Assembly	
15	M412627	Screw	
16	44117201	Motor Bracket	
17	M400026	Nut	
18	M400014	Washer	
19	M401327	Key	
20	44086901P	Sheave Kit	Includes item 19 and 2 of item 21
21	M400065	Screw	
22	M400399	Ring	

NOTE: On nonreversing models, there is only one motor that functions as the drive motor and fan motor. Refer to *Fan Motors* section for motor part numbers.

info@zipnasklade.ru
8(800)500-69-51

© Copyright, Alliance Laundry Systems LLC – DO NOT COPY or TRANSMIT

Drive Components for Nonreversing Models Starting 8/1/11

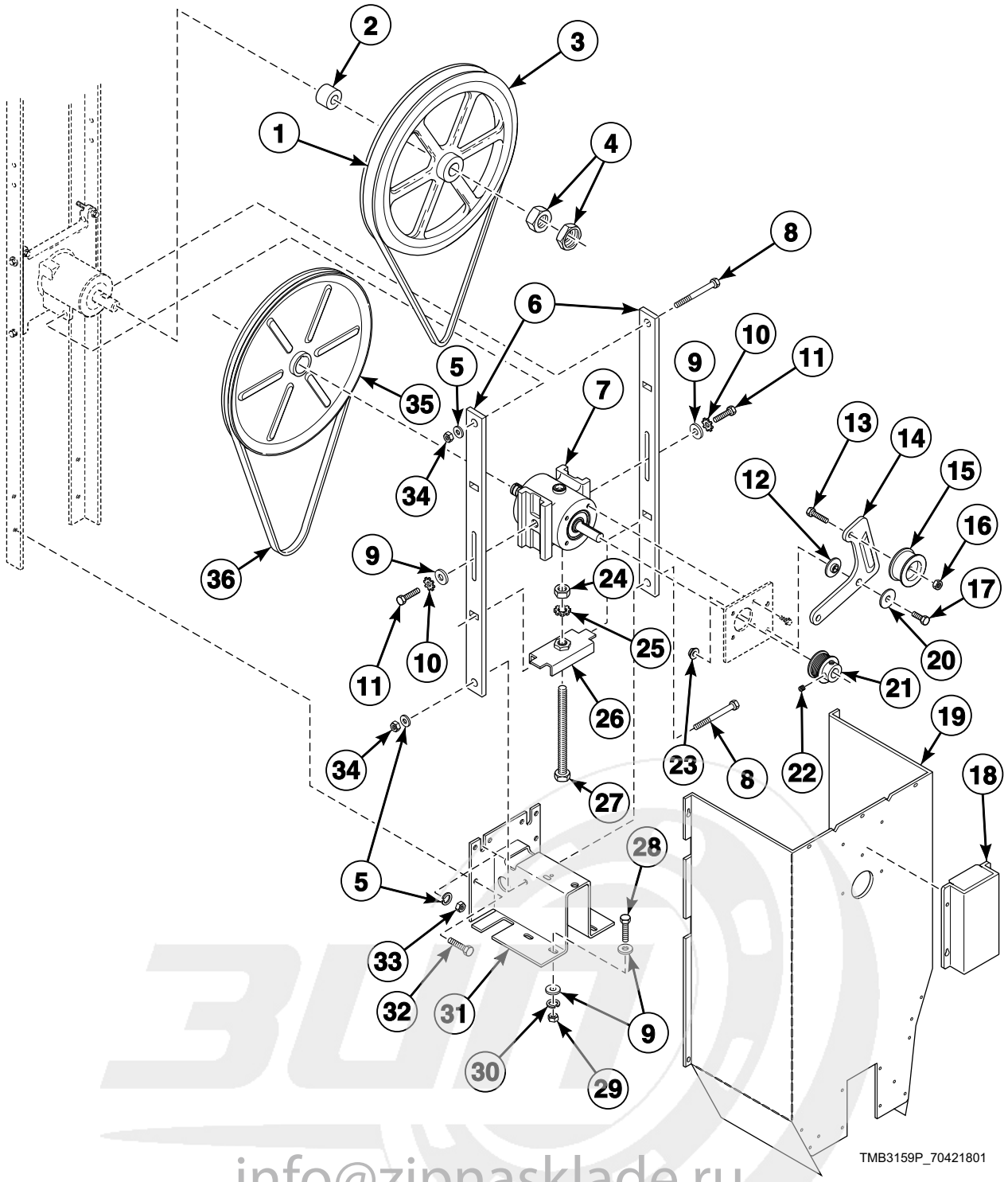

info@zipnasklade.ru
8(800)500-69-51

© Copyright, Alliance Laundry Systems LLC – DO NOT COPY or TRANSMIT

Drive Components for Nonreversing Models Starting 8/1/11

REF	PART NO.	DESCRIPTION	COMMENTS
	44209001	Belt Idler Assembly	Includes items 7, 8, 10-12, 22, 23, 25-28 and 36
1	M411425P	Micro V Belt	
2	44024001	Spacer	
3	M412156	Micro V Sheave	
4	M400035	Nut	
5	M400014	Washer	
6	M412476	Guide Rail	
7	44107101	Idler Housing Assembly	
8	M400061	Screw	
9	M400080	Washer	
10	M403958	Washer	
11	M400043	Screw	
12	70265901	Washer	
13	430648	Screw	
14	44102701	Idler Arm	
15	430619	Drum Idler Wheel Assembly	
16	56156	Nut	
17	M400056	Screw	
18	44222501	Guard Extension	
19	44132401	Belt Guard Assembly	Use 51780 Screw to mount; Non-moisture sensing
	44132408	Belt Guard Assembly	Use 51780 Screw to mount; Moisture sensing
20	70270301	Washer	
21	M411466P	Micro V Pulley	
22	M400077	Screw	
23	44087201	Nut	
24	H88412101	Nut	
25	M412188	Washer	
26	M414405	Tension Plate Assembly	
27	M412627	Screw	
28	M400057	Screw	
29	02428	Nut	
30	M400013	Washer	
31	44117201	Motor Bracket	
32	M401393	Bolt	
33	20274	Nut	
34	M400026	Nut	
35	44086901P	Sheave Kit	
36	M401182P	Belt	

NOTE: On nonreversing models, there is only one motor that functions as the drive motor and fan motor. Refer to *Fan Motors* section for motor part numbers.

info@zipnasklade.ru
8(800)500-69-51

© Copyright, Alliance Laundry Systems LLC – DO NOT COPY or TRANSMIT

Idler Housing Assembly for Non-Moisture Sensing Reversing Models Through 1/31/12

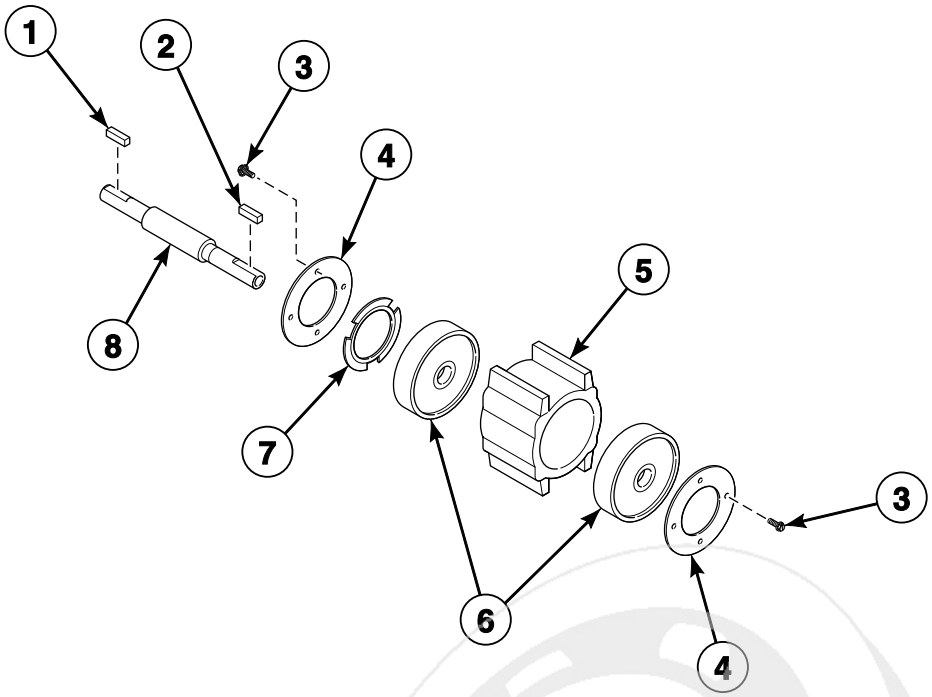

TMB2160P_70421801

info@zipnasklade.ru
8(800)500-69-51

© Copyright, Alliance Laundry Systems LLC – DO NOT COPY or TRANSMIT

Idler Housing Assembly for Non-Moisture Sensing Reversing Models Through 1/31/12

REF	PART NO.	DESCRIPTION	COMMENTS
	917P3	Idler Housing Kit	Includes items 1-4, 7 and M412476 Guide Rail, M412630 Idler Housing Assembly and 614P3 Idler Assembly Components Kit
1	M401327	Key	
2	M400993	Key	
3	70187201	Screw	8 required
4	M401370	Bearing Retainer	
5	M412612	Idler Housing	
6	M401375P	Ball Bearing	
7	M400401	Loading Spring	
8	M414241	Idler Shaft	

info@zipnasklade.ru
8(800)500-69-51

© Copyright, Alliance Laundry Systems LLC – DO NOT COPY or TRANSMIT

Idler Assembly for Nonreversing Models Through 7/31/11

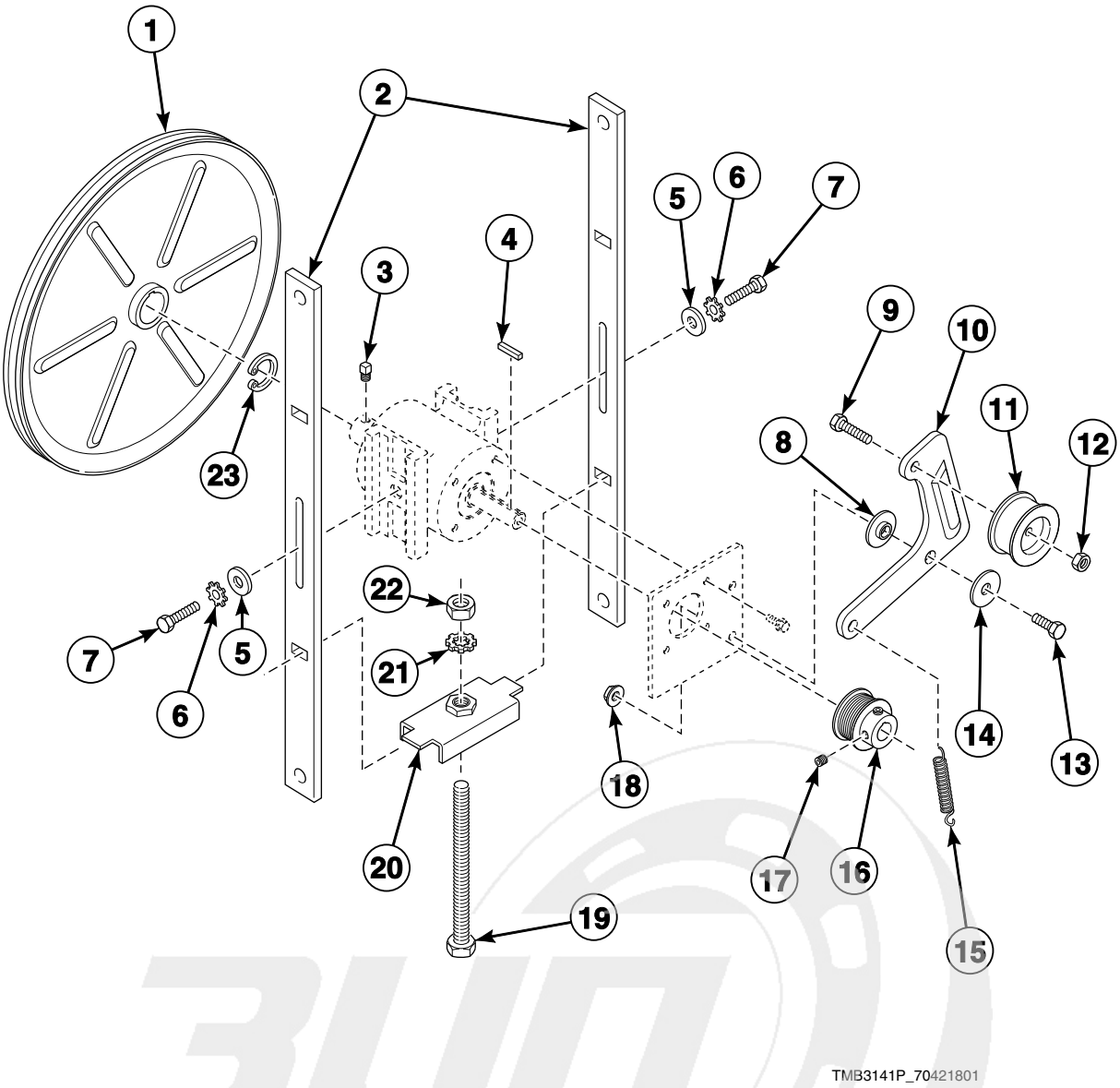

info@zipnasklade.ru
8(800)500-69-51

© Copyright, Alliance Laundry Systems LLC – DO NOT COPY or TRANSMIT

Idler Assembly for Nonreversing Models Through 7/31/11

REF	PART NO.	DESCRIPTION	COMMENTS
	942P3P	Idler/Belt Assembly Kit	Use to replace whole assembly
	943P3P	Idler Housing Kit	
1	44086901P	Sheave Kit	
2	M412476	Guide Rail	2 required
3	M400065	Screw	2 required
4	M401327	Key	2 required
5	M400080	Washer	2 required
6	M403958	Washer	2 required
7	M400043	Screw	2 required
8	70265901	Washer	
9	430648	Screw	
10	44102701	Idler Arm	
11	430619	Drum Idler Wheel Assembly	
12	56156	Nut	
13	M400056	Screw	
14	70270301	Washer	
15	M412120	Extension Spring	
16	M411466P	Micro V Pulley	
17	M400077	Screw	2 required
18	44087201	Nut	
19	M412627	Screw	
20	M414405	Tension Plate Assembly	
21	M412188	Washer	
22	H88412101	Nut	
23	M400399	Ring	

info@zipnasklade.ru
8(800)500-69-51

© Copyright, Alliance Laundry Systems LLC – DO NOT COPY or TRANSMIT

Moisture Sensing Components

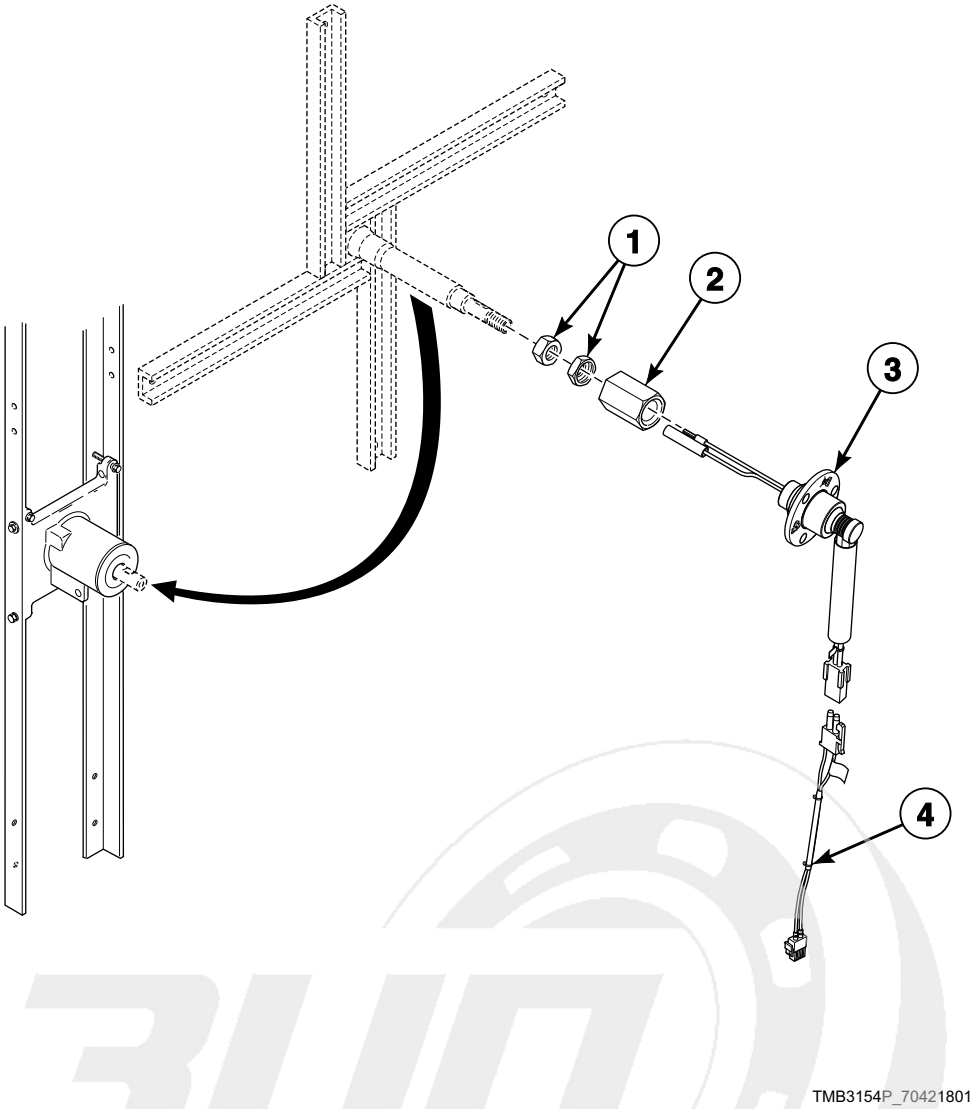

info@zipnasklade.ru
8(800)500-69-51

© Copyright, Alliance Laundry Systems LLC – DO NOT COPY or TRANSMIT

Moisture Sensing Components

REF	PART NO.	DESCRIPTION	COMMENTS
	70468901	Moisture Sensor Test Wires	Use to troubleshoot the moisture sensor circuit
1	M400035	Nut	
2	44224401	Slip Ring Holder	
3	44240201	Slip Ring Assembly	
4	70448901	Moisture Sensor Harness Assembly	Goes from item 3 to main harness

info@zipnasklade.ru
8(800)500-69-51

© Copyright, Alliance Laundry Systems LLC – DO NOT COPY or TRANSMIT

Fan Components

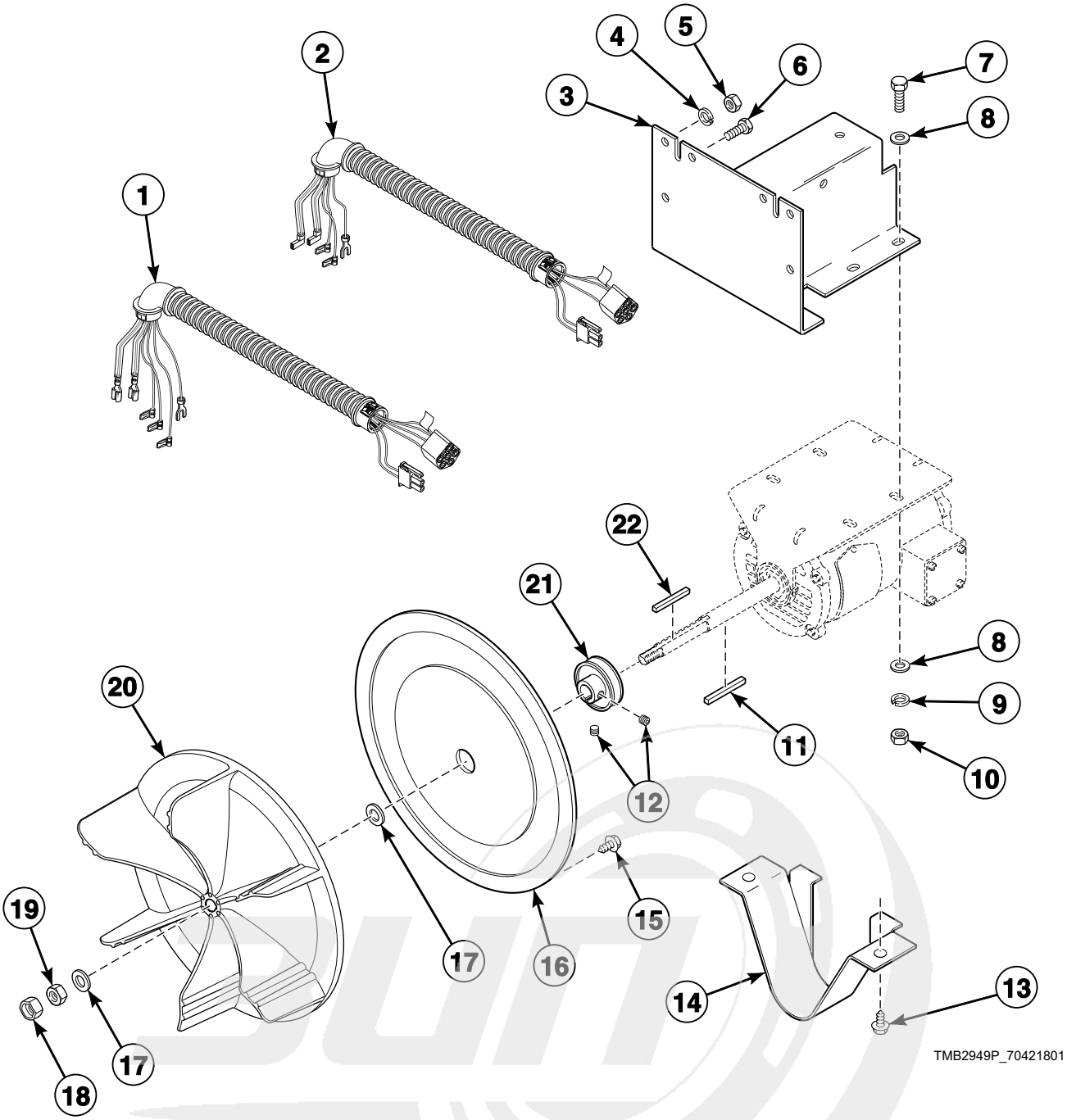

info@zipnasklade.ru
8(800)500-69-51

© Copyright, Alliance Laundry Systems LLC – DO NOT COPY or TRANSMIT

Fan Components

REF	PART NO.	DESCRIPTION	COMMENTS
	M4426P3	Motor Hardware Kit	Includes items 11, 17-19 and 22
	M4525P3P	Resilient Ring Kit	2 per package
1	44169901	Fan Motor Harness	3 Phase
2	44137201P	Fan Motor Harness	1 Phase
3	44117201	Motor Bracket	
4	M400014	Washer	
5	20274	Nut	
6	M401393	Bolt	2 required
7	M400057	Screw	
8	M400080	Washer	
9	M400013	Washer	
10	02428	Nut	
11	44132301	Key	Nonreversing; All models: 120 Volt/60 Hertz/1 Phase or 200-208 or 240 Volt/60 Hertz/1 Phase; Electric models: 200-208 Volt/60 Hertz/3 Phase or 240 Volt/60 Hertz/3 Phase
	M400993	Key	All other voltages
12	M400077	Screw	Supplied with pulley
13	430497	Screw	
14	M413008	Belt Guard	
15	M410059	Screw	7 required
16	M401362	Cover Plate	
17	M400991	Washer	
18	M400034	Nut	
19	M400022	Nut	
20	44127401P	Blower	
21	M414564	Pulley	60 Hertz; Nonreversing
	M414566	Pulley	50 Hertz; Nonreversing
22	M400994P	Key and Instruction Kit	

info@zipnasklade.ru
8(800)500-69-51

© Copyright, Alliance Laundry Systems LLC – DO NOT COPY or TRANSMIT

Fan Motors

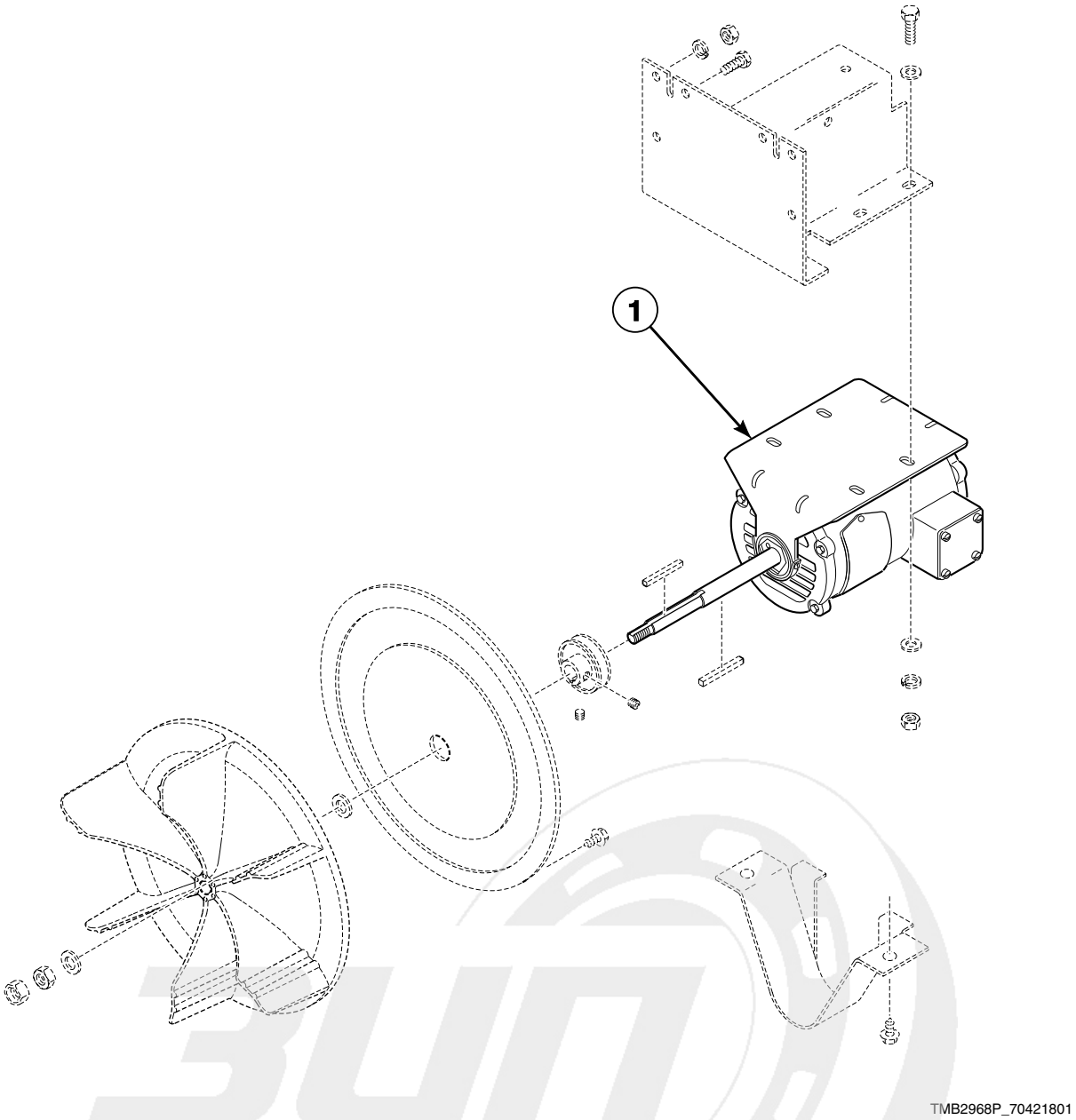

info@zipnasklade.ru
8(800)500-69-51

© Copyright, Alliance Laundry Systems LLC – DO NOT COPY or TRANSMIT

Fan Motors

REF	PART NO.	DESCRIPTION	COMMENTS
1	44045801P	Motor	Use 44132301 Key for pulley and M400994 Key for fan; Use 70211501 Motor Capacitor; Nonreversing; Gas and steam models with: 120 Volt/60 Hertz/1 Phase and 200-208 or 240 Volt/60 Hertz/1 Phase; Electric models with: 200-208 Volt/60 Hertz/3 Phase and 240 Volt/60 Hertz/3 Phase
	44046101P	Motor	1/2 horsepower; Nonreversing; Gas and steam models with: 200-208 or 240 Volt/60 Hertz/3 Phase, 460-480 Volt/60 Hertz/3 Phase, 200 Volt/50 Hertz/3 Phase, 230-240 Volt/50 Hertz/3 Phase and 380 or 400-415 Volt/50 Hertz/3 Phase; Electric models with: 480 Volt/60 Hertz/3 Phase, 200 Volt/50 Hertz/3 Phase, 380 Volt/50 Hertz/3 Phase and 400-415 Volt/50 Hertz/3 Phase
	44048701P	Motor	Use M410300 Motor Capacitor; Nonreversing; Gas and steam models with: 230-240 Volt/50 Hertz/1 Phase; Electric models with: 240 Volt/50 Hertz/1 or 3 Phase
	44046001P	Fan Motor	1/3 horsepower; Reversing; Gas and steam models with: 200-208 or 240 Volt/50 or 60 Hertz/3 Phase, 460-480 Volt/50 or 60 Hertz/3 Phase, 200 Volt/50 or 60 Hertz/3 Phase, 230-240 Volt/50 Hertz/3 Phase and 380 or 400-415 Volt/50 or 60 Hertz/3 Phase; Electric models with: 480 Volt/50 or 60 Hertz/3 Phase, 380 Volt/50 or 60 Hertz/3 Phase and 400-415 Volt/50 or 60 Hertz/3 Phase
	44045901P	Fan Motor	Use M410301 Motor Capacitor; Reversing; Gas and steam models with: 230-240 Volt/50 Hertz/1 Phase; Electric models with: 240 Volt/50 Hertz/1 or 3 Phase and 200 Volt/50 Hertz/3 Phase
	44045701P	Motor	Use M410296 Motor Capacitor; Reversing; Electric models with: 200-208 Volt/60 Hertz/3 Phase and 240 Volt/60 Hertz/3 Phase

NOTE: Nonreversing motors function as the fan motor and the drive motor.

info@zipnasklade.ru
8(800)500-69-51

© Copyright, Alliance Laundry Systems LLC – DO NOT COPY or TRANSMIT

Gas Heater Components

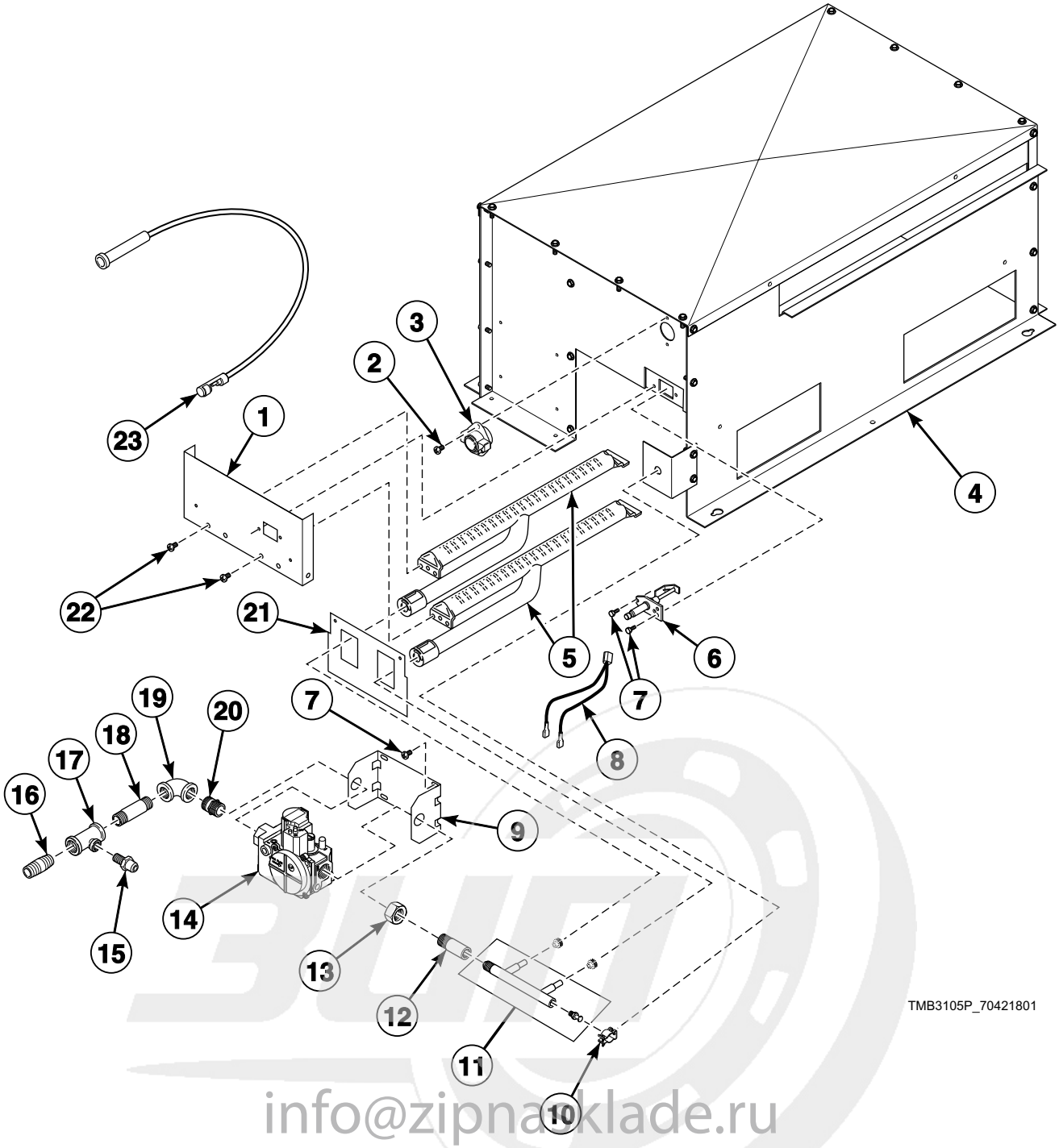

info@zipnaklade.ru
8(800)500-69-51

© Copyright, Alliance Laundry Systems LLC – DO NOT COPY or TRANSMIT

Gas Heater Components

REF	PART NO.	DESCRIPTION	COMMENTS
	M4544P3	L.P. Conversion Kit	Natural Gas (N.G.) to Liquid Petroleum Gas (L.P.); CE and Australian models
	M4979P3	L.P. Conversion Kit	N.G. to L.P.; Non-CE and non-Australian models
	M4897P3	L.P. Gas Valve Kit	Non-CE and non-Australian models
	M413468P	Gas Valve	N.G.; Non-CE and non-Australian models
	M4908P3	Valve Replacement Kit	N.G.; CE models; Use to replace valves through 11/30/09
	M4909P3	Valve Replacement Kit	L.P.; CE models; Use to replace valves through 11/30/09
1	44110201	Burner Support	
2	M402797	Screw	2 required
3	M409433	Limit Thermostat	Non-CE and non-Australian models
	M411938	Manual Reset Thermostat	CE, Australian and Korean models
4	44136001	Gas Stove Assembly	Includes item 5
5	M410541P	Burner Assembly	2 required
6	M406934P	Spark Igniter	Models through 9/16/12
	44253701	Spark Electrode	Models starting 9/17/12
7	430497	Screw	2 required
8	M412997	Harness Assembly	Non-CE and non-Australian models
	M413650	Gas Valve Harness Assembly	CE and Australian models
9	44175701	Gas Valve Bracket	
10	44155201	Pipe Clamp	Includes screw
11	M410546	Spud Holder Assembly	
12	44040501	Manifold Pipe	C, D and I non-CE and non-Australian models
	M406681	Manifold Pipe Assembly	All other models
13	M401548	Nut	
14	44181601P	Gas Valve	N.G.; Australian models
	44181602	Gas Valve	L.P.; Australian models
	44178301P	Gas Valve	N.G.; CE models; Use to replace valves starting 12/1/09
	44178302P	Gas Valve	L.P.; CE models; Use to replace valves starting 12/1/09
	44154501P	Gas Valve	N.G.; Non-CE and non-Australian models
	44154502P	Gas Valve	L.P.; Non-CE and non-Australian models
15	44231601	Pressure Fitting	CE and Australian models
16	431486	Pipe Nipple	CE and Australian models
17	44231901	Pipe Tee	CE and Australian models
18	70210201	Pipe Nipple	Non-CE and non-Australian models
	70263801	Pipe Nipple	CE and Australian models
19	70079601	Elbow	
20	431486	Pipe Nipple	
21	44136101	Rear Access Plate	
22	70240301	Screw	4 required
23	44061602P	High Temperature Ignition Lead	Models through 9/16/12; Use with 70367301P or 70367401P Ignition Control
	44239704	High Voltage Suppression Cable	Models starting 9/17/12; Use with 70458601 or 70458701 Ignition Control

NOTE: For CE gas and orifice information, refer to Installation Manual.

info@zipnacklade.ru
8(800)500-69-51

© Copyright, Alliance Laundry Systems LLC – DO NOT COPY or TRANSMIT

Burner Orifices for Non-CE Models

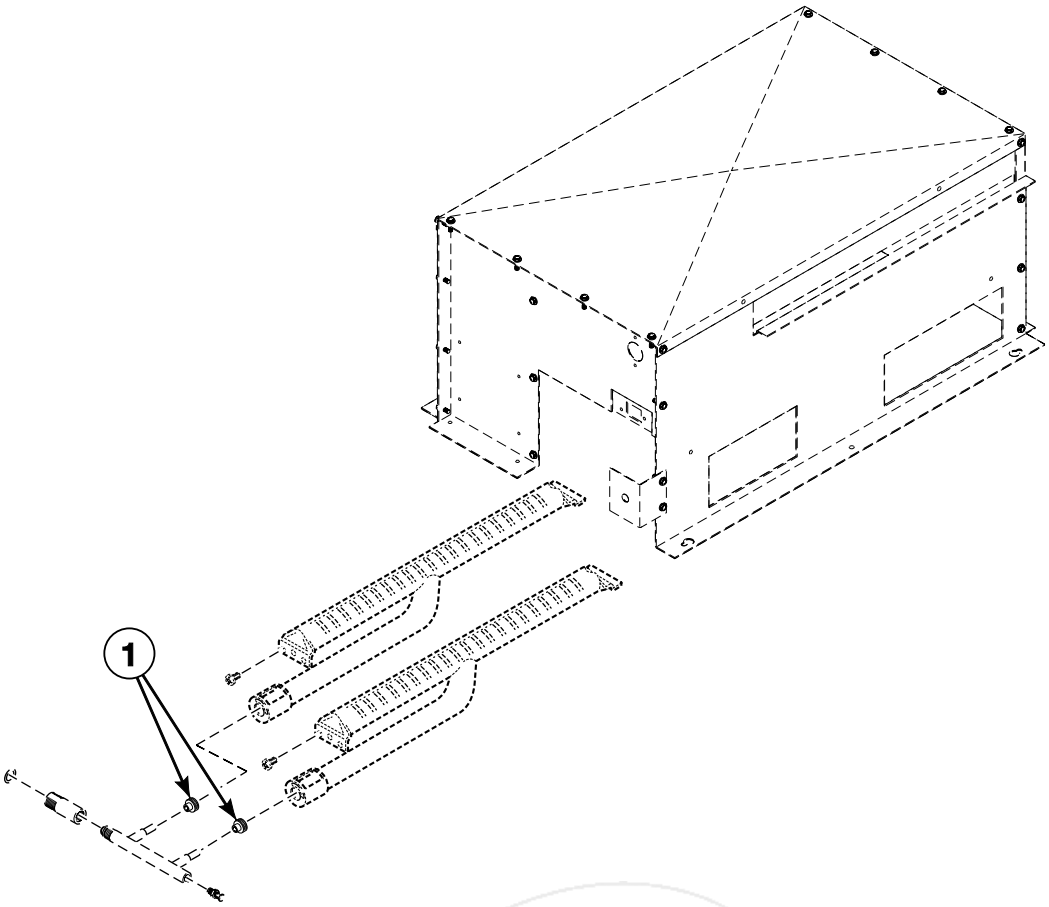

TMB2978P_70421801

info@zipnasklade.ru
8(800)500-69-51

© Copyright, Alliance Laundry Systems LLC – DO NOT COPY or TRANSMIT

Burner Orifices for Non-CE Models

REF	PART NO.	DESCRIPTION	COMMENTS
1	M406184	Burner Orifice	Liquid Petroleum Gas (L.P.); Drill no. 43 (2.3 mm); 0-4,000 feet; 2 required
	M401011	Burner Orifice	L.P.; Drill no. 44 (2.2 mm); 4,001-6,000 feet; 2 required
	M401027	Burner Orifice	L.P.; Drill no. 45 (2.1 mm); 6,001-8,000 feet; 2 required
	M401003	Burner Orifice	L.P.; Drill no. 46 (2.1 mm); 8,001-10,000 feet; 2 required
	M401000	Burner Orifice	Natural Gas (N.G.); Drill no. 26 (3.7 mm); 0-2,000 feet; 2 required
	M400998	Burner Orifice	N.G.; Drill no. 27 (3.7 mm); 2,001-4,000 feet; 2 required
	M401014	Burner Orifice	N.G.; Drill no. 28 (3.6 mm); 4,001-6,000 feet; 2 required
	M400997	Burner Orifice	N.G.; Drill no. 29 (3.5 mm); 6,001-8,000 feet; 2 required
	M401021	Burner Orifice	N.G.; Drill no. 30 (3.3 mm); 8,001-10,000 feet; 2 required

NOTE: For CE gas and orifice information, refer to Installation Manual.

info@zipnasklade.ru
8(800)500-69-51

© Copyright, Alliance Laundry Systems LLC – DO NOT COPY or TRANSMIT

Electric Heater Components

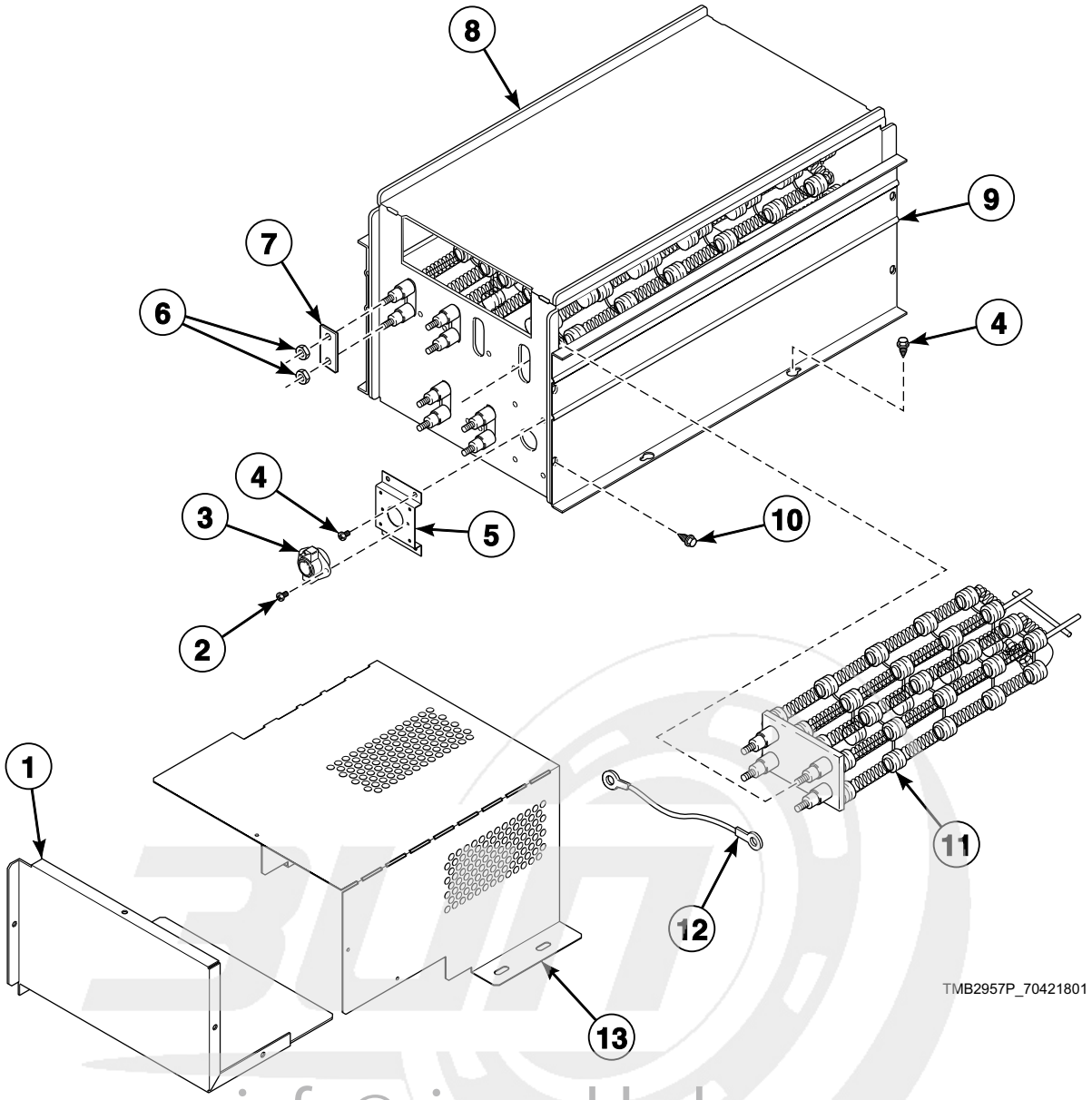

info@zipnasklade.ru
8(800)500-69-51

© Copyright, Alliance Laundry Systems LLC – DO NOT COPY or TRANSMIT

Electric Heater Components

REF	PART NO.	DESCRIPTION	COMMENTS
1	44154901	Electric Accessory Box Cover	
2	33562	Screw	
3	M410542	Limit Thermostat	
4	430497	Screw	
5	70356301	Switch Bracket	
6	70054	Nut	
7	M400866	Jumper Bar	380 Volt/50 Hertz/3 Phase, 400-415 Volt/50 Hertz/3 Phase and 480 Volt/60 Hertz/3 Phase
	M400869	Jumper Strip	3 required for 480 Volt/60 Hertz/3 Phase; 6 required for all others
8	44153301	Heater Box Cover	
9	44154801	Heater Side	
10	70240301	Screw	
11	M410939P	Heater Element	3 required; 10 kW; 240 Volt heater element for 230-240, 400-415 and 480 Volt/3 Phase models
	M410940P	Heater Element	3 required; 10 kW; 208 Volt heater element for 200-208 Volt/3 Phase models; Non-CE and non-Australian models
	M410941P	Heater Element	3 required; 10 kW 220 Volt heater element for 380 and 440 Volt/3 Phase models
	M412955P	Heater Element	3 required; 7 kW; 240 Volt heater element for 230-240 Volt/1 Phase models; Non-CE and non-Australian models
12	M412287	Jumper Wire Assembly	1 required for 380 Volt/50 Hertz/3 Phase and 400-415 Volt/50 Hertz/3 Phase; 2 required for 480 Volt/60 Hertz/3 Phase
13	44154701	Electric Accessory Box Wrap	

info@zipnasklade.ru
8(800)500-69-51

© Copyright, Alliance Laundry Systems LLC – DO NOT COPY or TRANSMIT

Airflow Switch Assembly

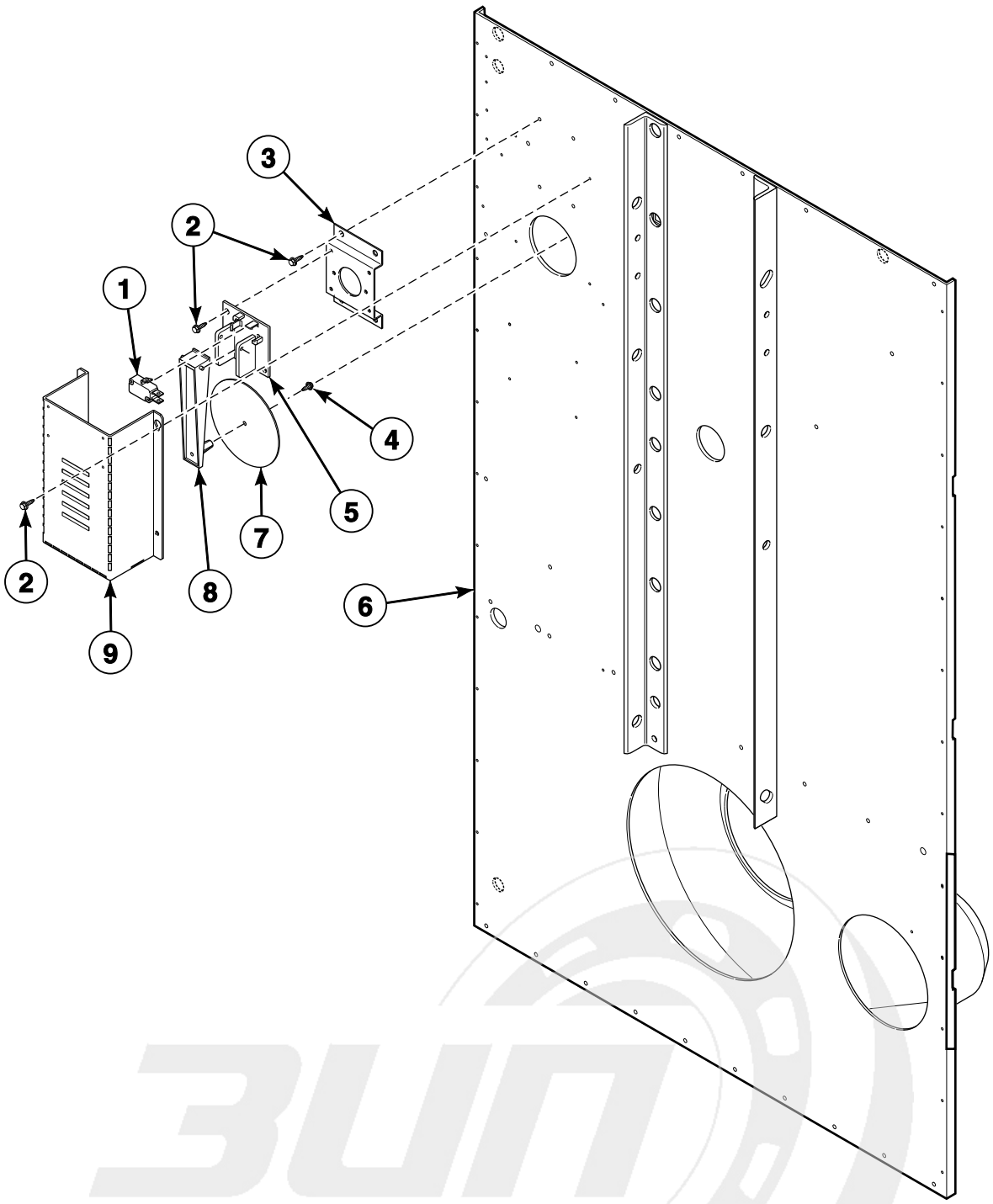

TMB3248P_70421801

info@zipnasklade.ru
8(800)500-69-51

© Copyright, Alliance Laundry Systems LLC – DO NOT COPY or TRANSMIT

Airflow Switch Assembly

REF	PART NO.	DESCRIPTION	COMMENTS
	44142901	Airflow Switch Assembly	Includes items 1-5, 7 and 8
1	70411901	Switch	
2	430497	Screw	6 required
3	70356301	Switch Bracket	
4	430757	Screw	
5	70319601	Airflow Switch and Arm Bracket	
6	44170401P	Rear Panel Assembly	
	N/A	Rear Panel Assembly	Bolt on angle option
7	70319202	Airflow Switch Vane	
8	70319401	Airflow Switch Arm	
9	44143501	Airflow Switch Cover	

N/A = Part no longer available

info@zipnasklade.ru
8(800)500-69-51

© Copyright, Alliance Laundry Systems LLC – DO NOT COPY or TRANSMIT

Steam Heater and Valve

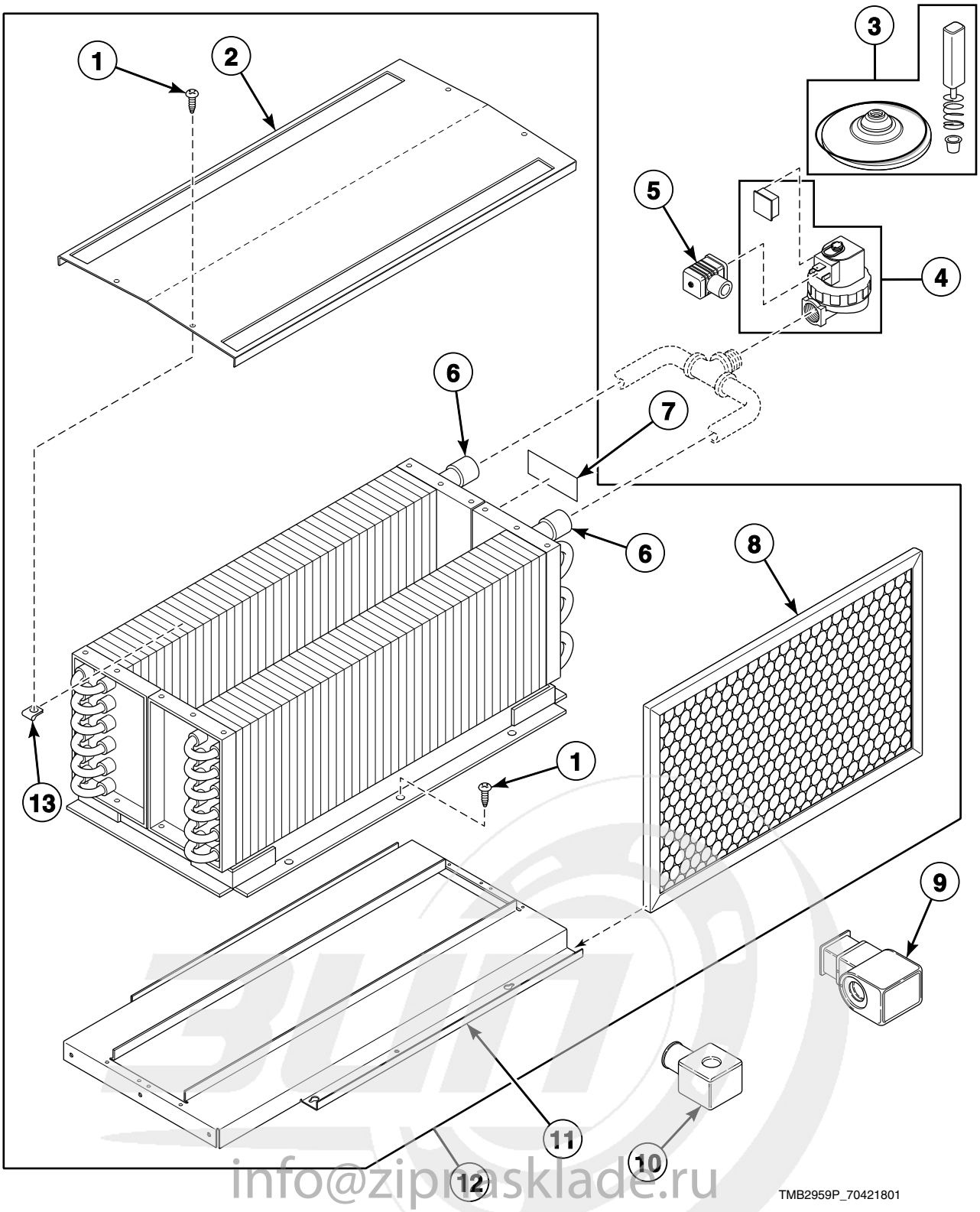

info@zipnasklade.ru
8(800)500-69-51

© Copyright, Alliance Laundry Systems LLC – DO NOT COPY or TRANSMIT

Steam Heater and Valve

REF	PART NO.	DESCRIPTION	COMMENTS
	M405188	Screw	Thermal oil models; 8 required
	33562	Screw	Thermal oil models; 4 required
	M414759	Top Cover	Thermal oil models
	M412997	Harness Assembly	
1	430497	Screw	
2	M400828	Low Pressure Steam Cover	
3	70351021P	Steam Valve Rebuild Kit	All models except thermal oil models; Use with 70351001P and 70351002P Steam Valves
	F8379502	Valve Rebuild Kit	All models except thermal oil models; Use with F8322902 and F8322903 Steam Valves
4	F8322903	Steam Valve	All models except thermal oil models; 50 Hertz
	70351001P	Steam Valve	Models through Serial No. 1009000099; All models except thermal oil models; 60 Hertz
	F8322902	Steam Valve	Models starting Serial No. 1009000100; All models except thermal oil models; 60 Hertz
5	70370301P	Solenoid Valve DIN Connector	All models except thermal oil models
6	M400637P	Steam Coil	2 required; All models except thermal oil models
7	902303	Steam Pressure Label	All models except thermal oil models; Near inlet to indicate maximum steam pressure
8	44172001	Filter	2 required; Aluminum
	44104201	Air Filter	2 required; Fiberglass
9	70351012	Steam Solenoid	All models except thermal oil models
10	70351011P	Steam Solenoid	All models except thermal oil models
11	44007501	Steam Stand Box	
12	44020401P	Steam Heater Assembly	All models except thermal oil models
13	M400974	Clip	

info@zipnasklade.ru
8(800)500-69-51

© Copyright, Alliance Laundry Systems LLC – DO NOT COPY or TRANSMIT

Rotation Sensor

C, D, H, I, S and U Models

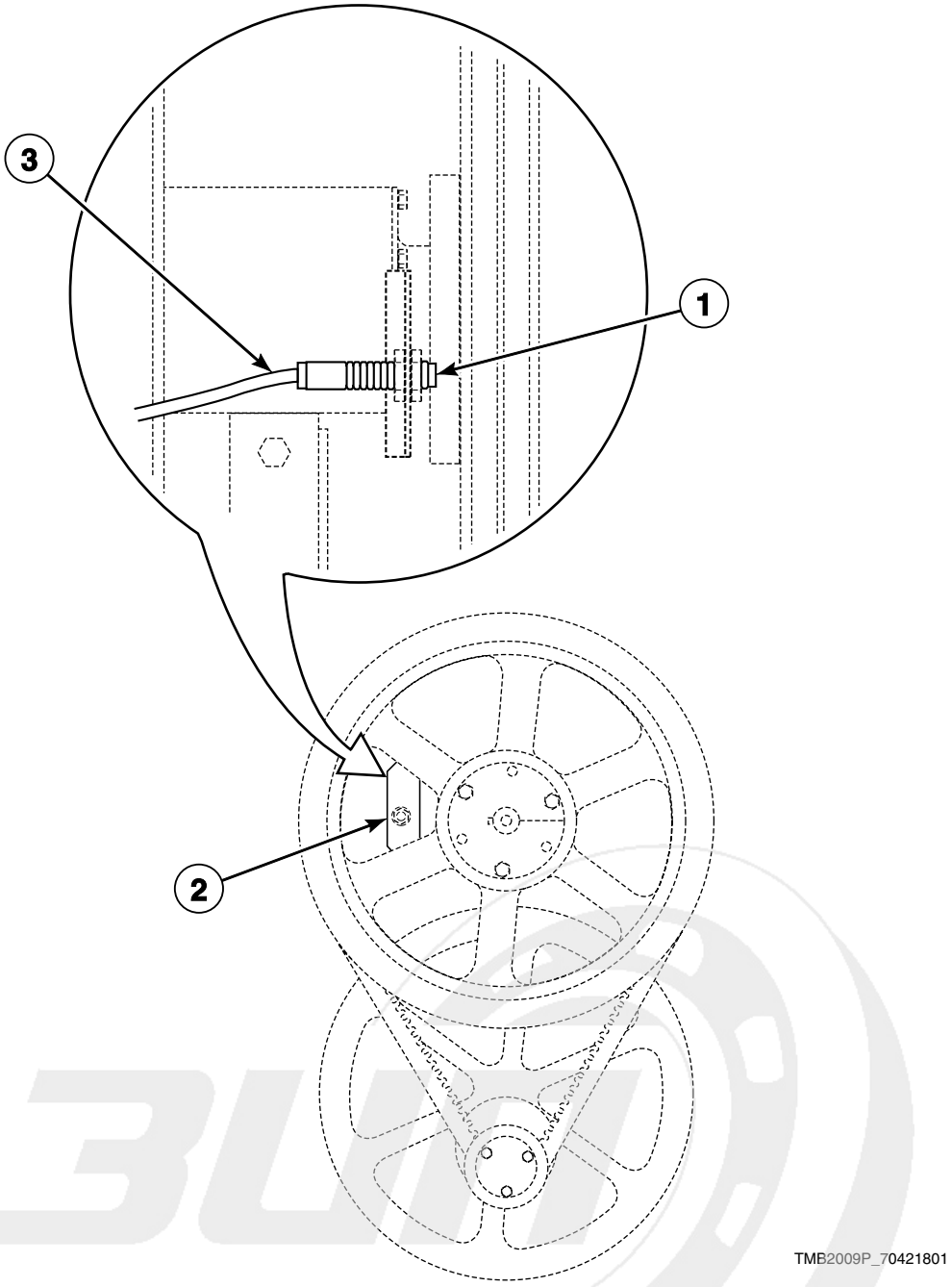

info@zipnasklade.ru
8(800)500-69-51

© Copyright, Alliance Laundry Systems LLC – DO NOT COPY or TRANSMIT

Rotation Sensor

REF	PART NO.	DESCRIPTION	COMMENTS
	7009P	Rotation Sensor Kit	Includes item 1, 70476101 Rotation Sensor Harness and 44044401 Rotation Sensor Bracket
1	F8066201	Rotation Sensor	
2	44207501	Bracket	Models with EO, RE, RU and UO control suffixes
	44044501	Proximity Bracket	Models with 3B, 3O, 3V, 3W, 3X, DO, DV, DX and R3 control suffixes
3	F8066401	Rotation Sensor Harness	Models with EO, RE, RU and UO control suffixes
	70476101	Rotation Sensor Harness	Models with 3B, 3O, 3V, 3W, 3X, DO, DV, DX and R3 control suffixes

info@zipnasklade.ru
8(800)500-69-51

© Copyright, Alliance Laundry Systems LLC – DO NOT COPY or TRANSMIT

Duct and Damper Assembly

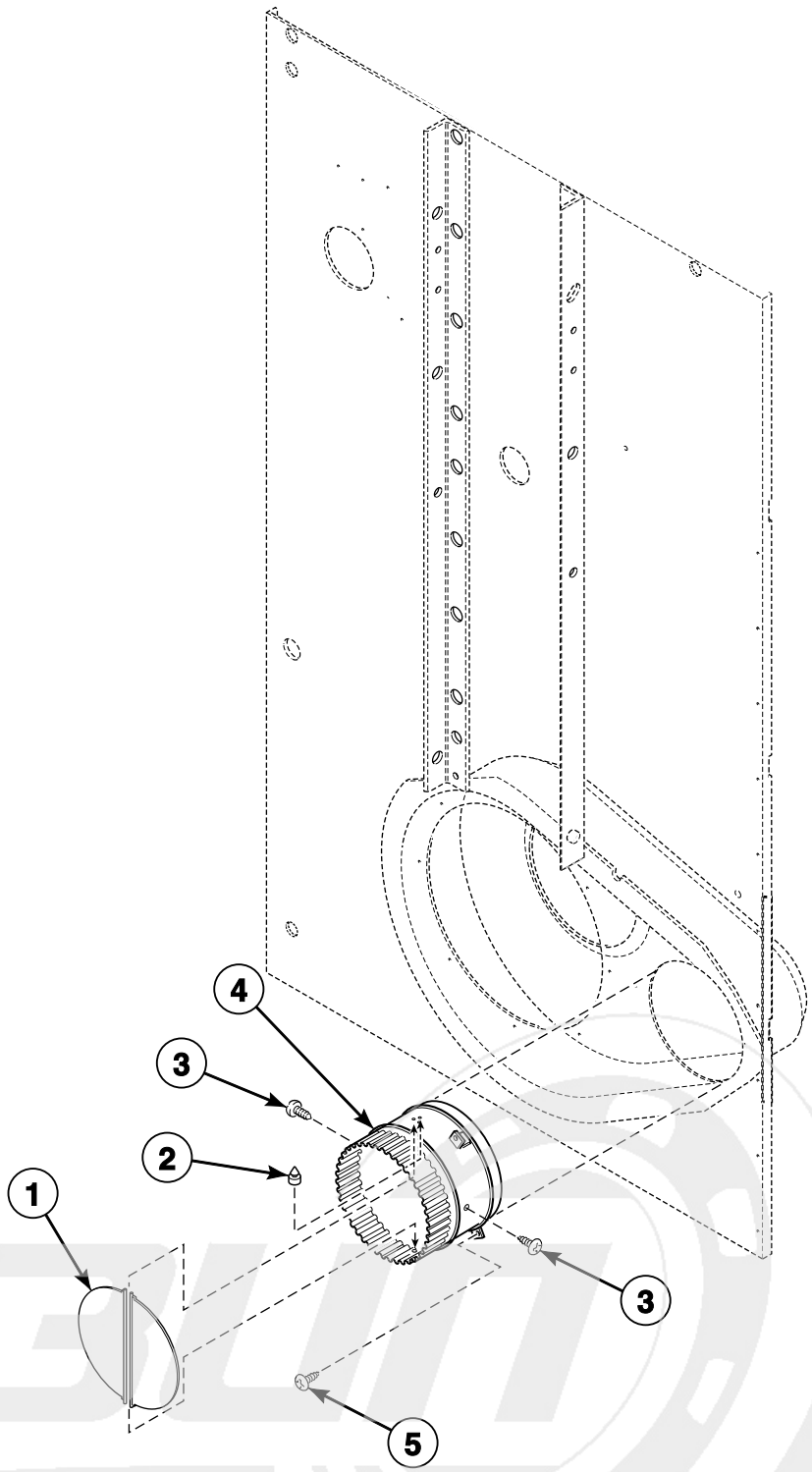

TMB2960P_70421801

info@zipnasklade.ru
8(800)500-69-51

© Copyright, Alliance Laundry Systems LLC – DO NOT COPY or TRANSMIT

Duct and Damper Assembly

REF	PART NO.	DESCRIPTION	COMMENTS
1	M400503	Thimble Vane Assembly	2 required
2	M400795	Bumper	
3	M405188	Screw	2 required
4	M412288	Exhaust Thimble Assembly	
5	M411072	Screw	3 required

info@zipnasklade.ru
8(800)500-69-51

© Copyright, Alliance Laundry Systems LLC – DO NOT COPY or TRANSMIT

Rear Panel Assembly

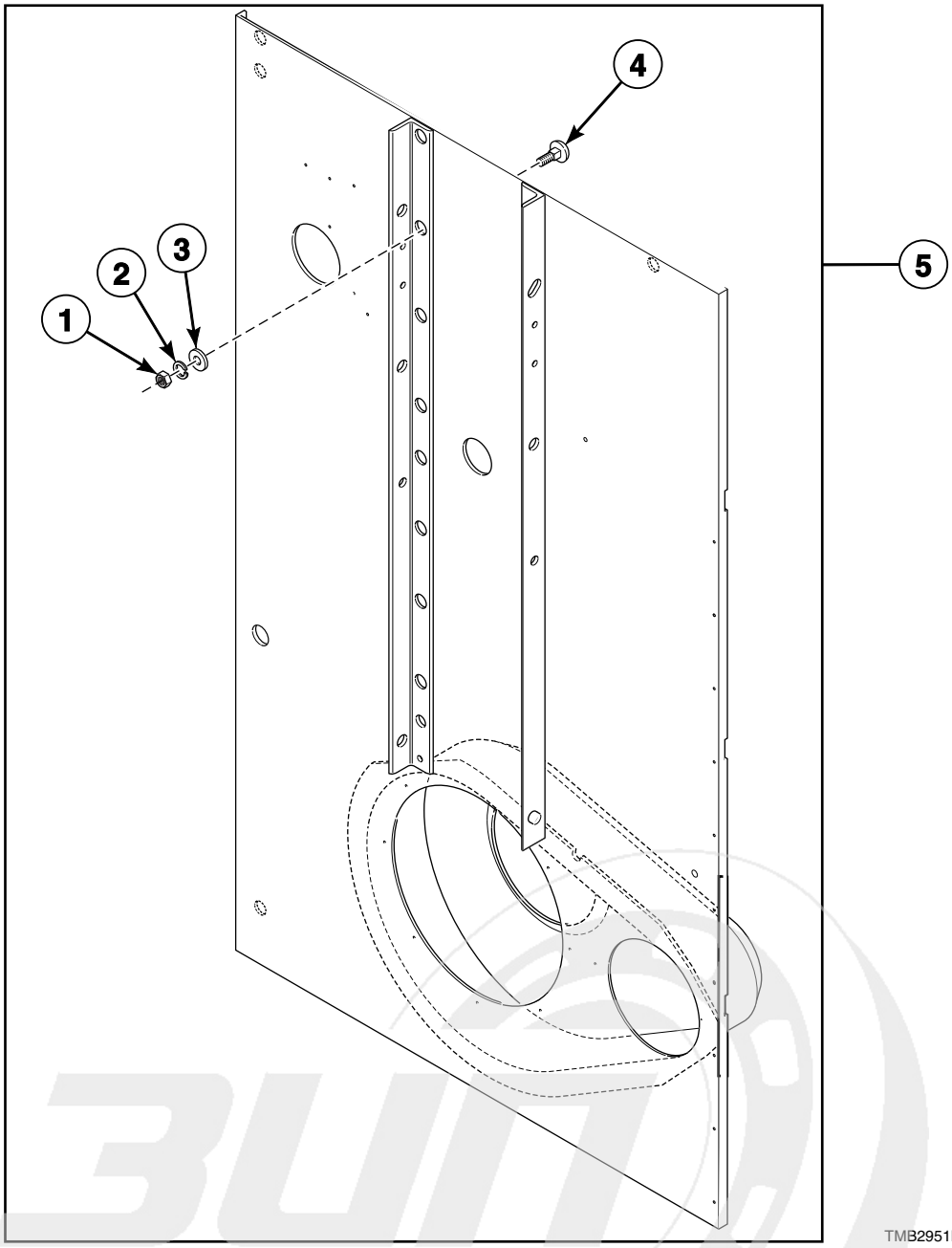

info@zipnasklade.ru
8(800)500-69-51

© Copyright, Alliance Laundry Systems LLC – DO NOT COPY or TRANSMIT

Rear Panel Assembly

REF	PART NO.	DESCRIPTION	COMMENTS
	44170401P	Rear Panel Assembly	
1	20274	Nut	14 required
2	M400014	Washer	14 required
3	M400080	Washer	14 required
4	M405503	Bolt	14 required
5	N/A	Rear Panel Assembly	Bolt on angle option

N/A = Part no longer available

info@zipnasklade.ru
8(800)500-69-51

© Copyright, Alliance Laundry Systems LLC – DO NOT COPY or TRANSMIT

Control Tray Wrap Components

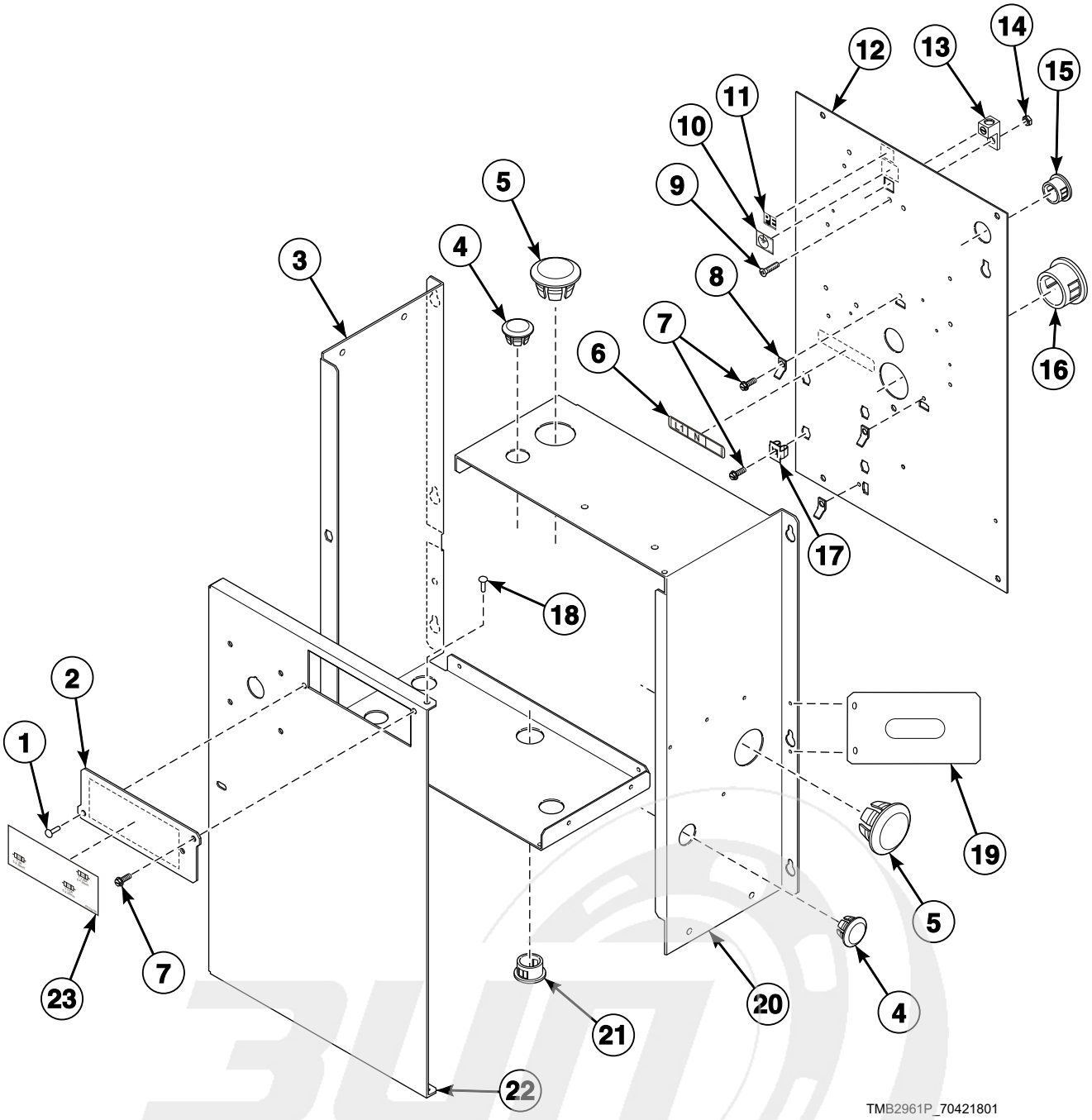

info@zipnasklade.ru
8(800)500-69-51

© Copyright, Alliance Laundry Systems LLC – DO NOT COPY or TRANSMIT

Control Tray Wrap Components

REF	PART NO.	DESCRIPTION	COMMENTS
1	70058501	Pop Rivet	
2	70313301	Fuse Cover	
3	44159001	Contactor Box Side	
4	M400985	Plug	Gas models nonreversing 2 required, reversing 1 required; Steam and electric models nonreversing 3 required, reversing 2 required
5	F8223801	Hole Plug	Gas and steam models 2 required; Electric models 1 required
6	70218801	Wire Label	L1, N
	70218701	Wire Label	L1, L2, L3
	70219001	Wire Label	L1, N, L2; Gas and steam models
7	F8206901	Screw	4 required
8	00177	Male Tab Terminal	3 required
9	F430909	Screw	
10	F230739	Ground Decal	
11	M412096	Earth Terminal Sticker	
12	44133701	Contactor Box Base	
13	M411283	Ground Lug Connector	
14	F430232	Nut	
15	44071501	Snap Bushing	Gas models
16	M405340	Snap Bushing	Electric models 2 required; Gas and steam models 1 required
17	70030501	Expansion Clip	5 required
18	70058502	Pop Rivet	2 required
19	44175801	Pipe Bracket	
20	44158901	Contactor Box Side	
21	70178701	Snap Bushing	
22	44134001	Contactor Box Cover	Gas and steam non-CE models
	44134002	Contactor Box Cover	Gas and steam CE models
	44134003	Contactor Box Cover	Electric models
23	70337301	Fuse Label	3 fuses
	70337201	Fuse Label	4 fuses; Models with less than 380 Volts
	70337401	Fuse Label	4 fuses; Models with 380 Volts or higher

info@zipnasklade.ru
8(800)500-69-51

© Copyright, Alliance Laundry Systems LLC – DO NOT COPY or TRANSMIT

Control Tray Fuses

MODELS WITH LESS THAN 380 VOLTS/1 PHASE

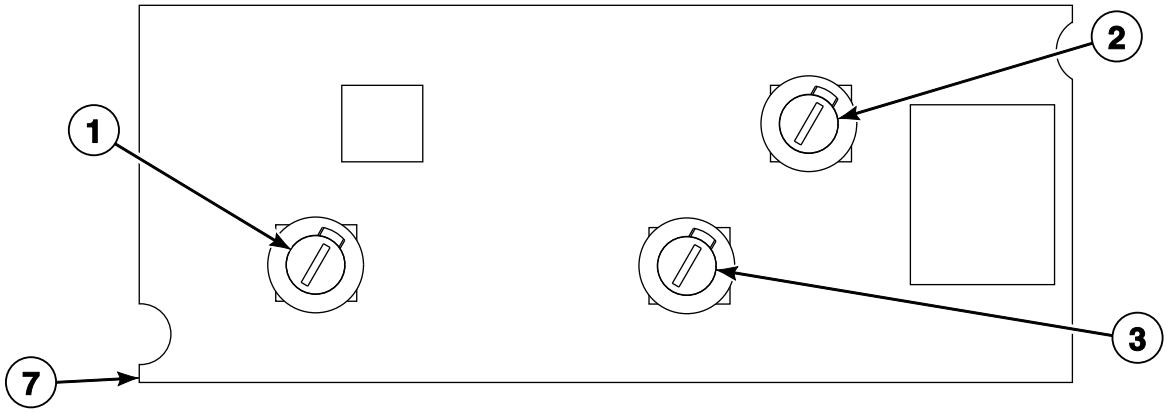

MODELS WITH LESS THAN 380 VOLTS/3 PHASE

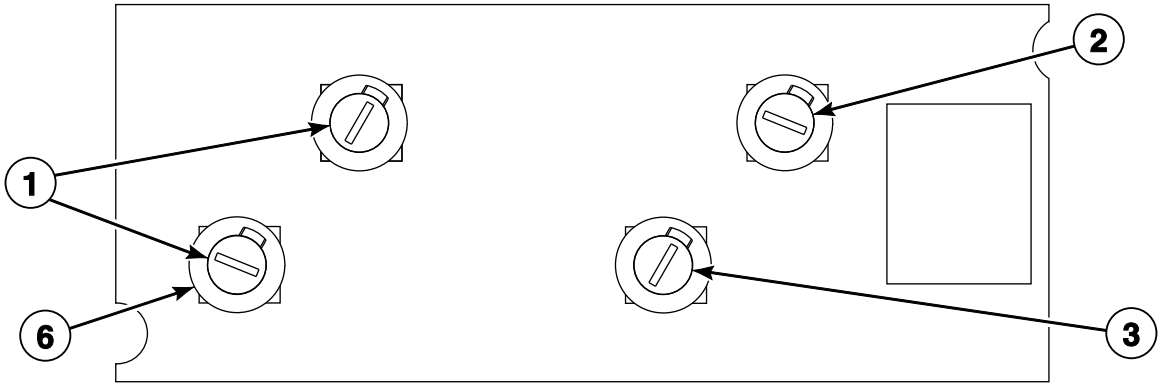

MODELS WITH 380 VOLTS OR HIGHER/3 PHASE

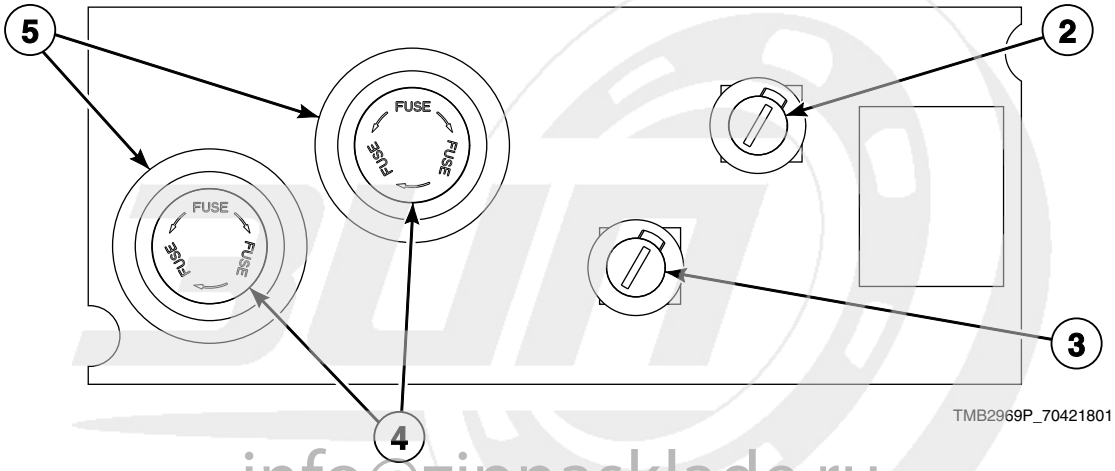

info@zipnasklade.ru
8(800)500-69-51

© Copyright, Alliance Laundry Systems LLC – DO NOT COPY or TRANSMIT

Control Tray Fuses

REF	PART NO.	DESCRIPTION	COMMENTS
1	70406701	Fuse	2 Amp
2	70406501	Fuse	1.25 Amp
3	70406601	Fuse	3.5 Amp
4	M413621	Fuse	.5 Amp
5	44155601P	Fuse Holder	
6	70329401P	Fuse Holder Body	
	70329501	Fuse Holder Cap	
7	70313602	Fuse Bracket	Models with 380 Volts or higher
	70306901	Fuse Bracket	Models with less than 380 Volts

info@zipnasklade.ru
8(800)500-69-51

© Copyright, Alliance Laundry Systems LLC – DO NOT COPY or TRANSMIT

Control Tray Harnesses for Gas and Steam Models

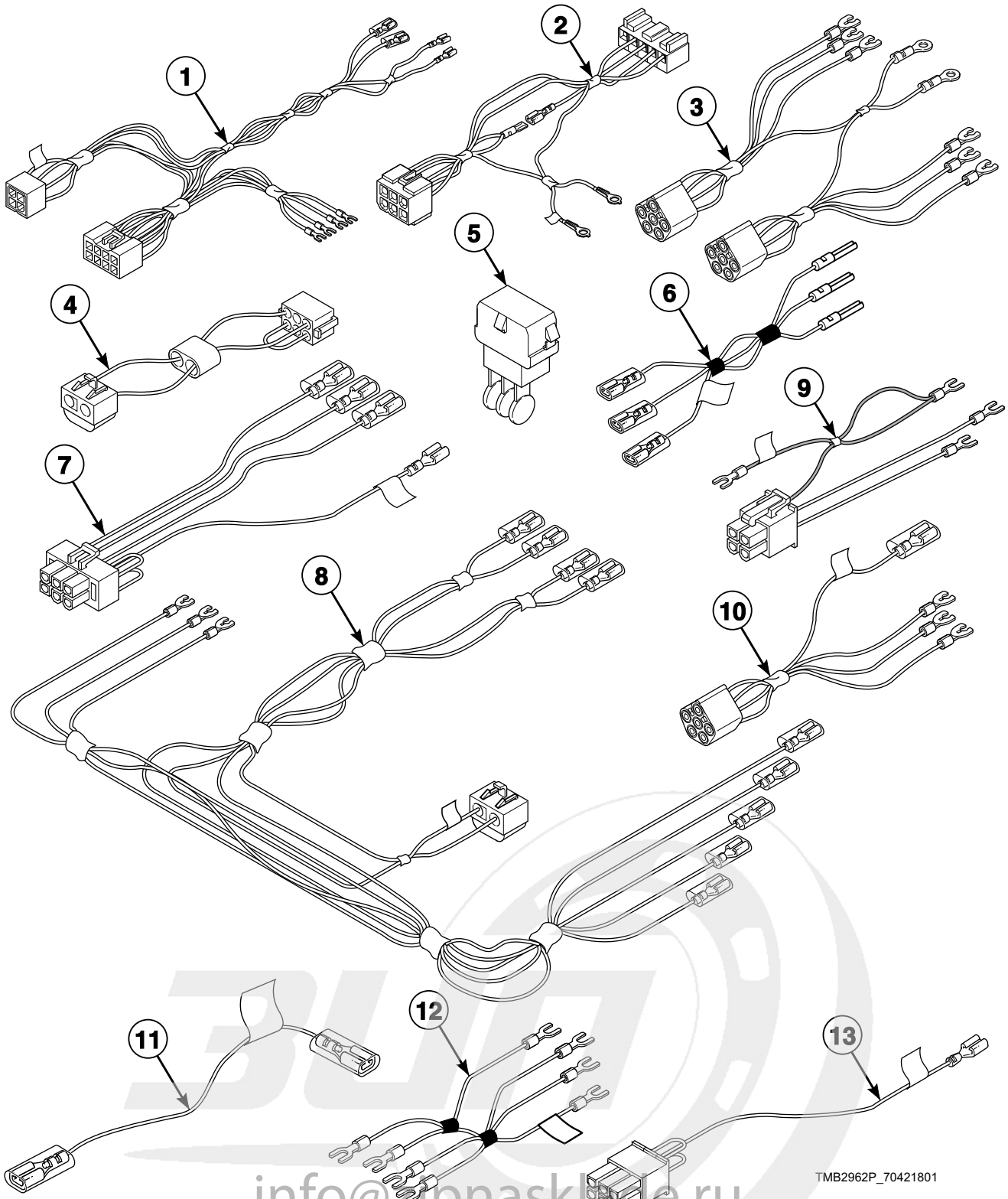

info@zipnasklade.ru
8(800)500-69-51

© Copyright, Alliance Laundry Systems LLC – DO NOT COPY or TRANSMIT

Control Tray Harnesses for Gas and Steam Models

REF	PART NO.	DESCRIPTION	COMMENTS
1	44136701P	Junction Box Harness	
2	44186701	Ignition Control Harness	Non-CE gas models
	44186901	Ignition Control Harness	CE gas models; Models with EO, RE, RU and UO control suffixes
	44136601P	Ignition Control Harness	CE gas models; Models with all other control suffixes
3	44139901P	Motor Contactor Harness	1 Phase; Reversing
	44142601P	Motor Contactor Harness	3 Phase; Reversing
4	M413506	Jumper Harness Assembly	208 Volt
	M413507	Jumper Configuration Assembly	240 Volt
	M413508	Jumper Harness Assembly	380 Volt
	M413510	Jumper Configuration Assembly	480 Volt
5	M413863	Network Capacitor Assembly	
6	70342101	Gas Disconnect Harness	CE models
7	44143401P	Network Capacitor Harness Assembly	
8	44136201P	Power Harness	3 Phase models with 380 Volts or higher
	44136301P	Power Harness	3 Phase models with less than 380 Volts
	44139801P	Power Harness	1 Phase; Models through 7/8/12
	44250001	Power Harness	1 Phase; Models starting 7/9/12
9	44139601P	Reversing Contactor Harness	
10	44137001P	Motor Contactor Harness	3 Phase
	44136401	Motor Contactor Harness	1 Phase
11	70389901	Steam Stove Limit Bypass Harness	Steam models
12	44157401	Reversing Contactor Jumper Wire	1 Phase; Upper
	44139501	Reversing Contactor Jumper	1 Phase; Lower
	44136801	Reversing Contactor Jumper Assembly	Upper
	44136901	Reversing Contactor Jumper Assembly	Lower
13	44142801	Steam Configuration Harness	Steam models

info@zipnasklade.ru
8(800)500-69-51

© Copyright, Alliance Laundry Systems LLC – DO NOT COPY or TRANSMIT

Control Tray Components for Gas Models

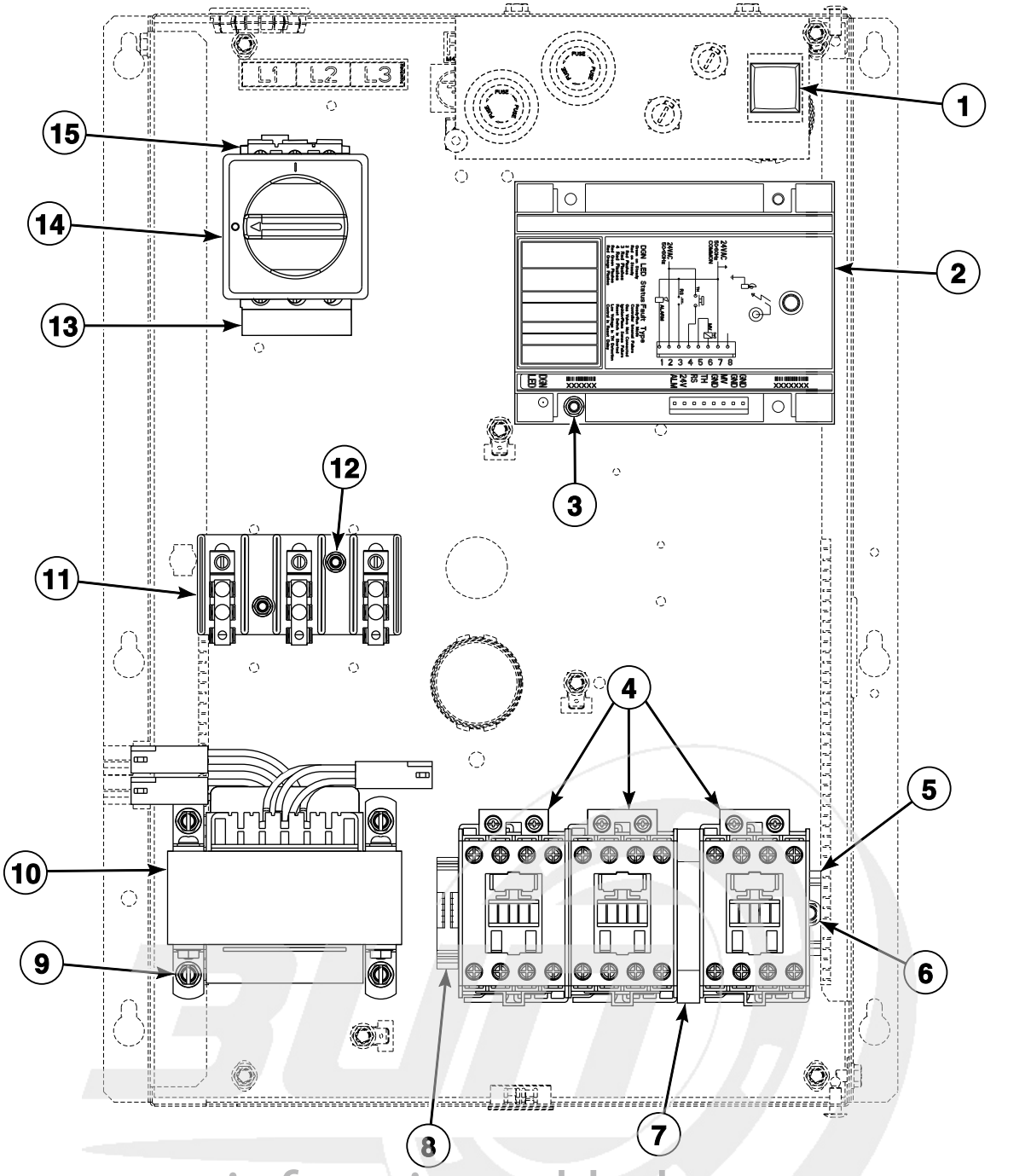

TMB3093P_70421801

info@zipnasklade.ru
8(800)500-69-51

© Copyright, Alliance Laundry Systems LLC – DO NOT COPY or TRANSMIT

Control Tray Components for Gas Models

REF	PART NO.	DESCRIPTION	COMMENTS
1	M413431	Pushbutton Switch	CE and Australian models
2	70367301P	Ignition Control	Non-CE and non-Australian models; Models through 9/16/12; Use with 44061602P High Temperature Ignition Lead
	70367401P	Ignition Control	CE models through 9/16/12; Australian models; Use with 44061602P High Temperature Ignition Lead
	70458601P	Ignition Control	Non-CE and non-Australian models; Models starting 9/17/12; Use with 44239704 High Voltage Suppression Cable
	70458701P	Ignition Control	CE models; Models starting 9/17/12; Use with 44239704 High Voltage Suppression Cable
3	38272	Screw	
4	70323701P	Contactor	Nonreversing 1 required, reversing 3 required
5	M412693	Din Rail	
6	430497	Screw	2 required
7	F330186P	Interlock Contactor	Reversing
8	70121001	End Stop	
9	M411072	Screw	4 required
10	M414228P	Transformer	Multitap; 100-240 Volt
	M414229P	Transformer	Multitap; 380-480 Volt
	44074401	Transformer	Dual secondary; 440 Volt
	M414230P	Transformer	Single secondary; 120 Volt
	M414312P	Transformer	Dual secondary; 120 Volt
11	430642	Terminal Block	Use 70333001 Terminal Block Shield to protect terminal block
12	44083001	Screw	2 required; Models through 9/16/12
	51783	Screw	2 required; Models starting 9/17/12
13	M412366	Finger Guard	CE models through 7/31/11
14	M412208	Handle	CE models through 7/31/11; 44160701 Extension Handle attaches to operator handle; M412368 Door Interlock mounts under operator handle
	44160701	Extension Handle	
	M412368	Door Interlock	
15	M412187P	Mounting Switch Base	CE models through 7/31/11; Use 51782 Screw to attach

info@zipnasklade.ru
8(800)500-69-51

© Copyright, Alliance Laundry Systems LLC – DO NOT COPY or TRANSMIT

Control Tray Components for Steam Models

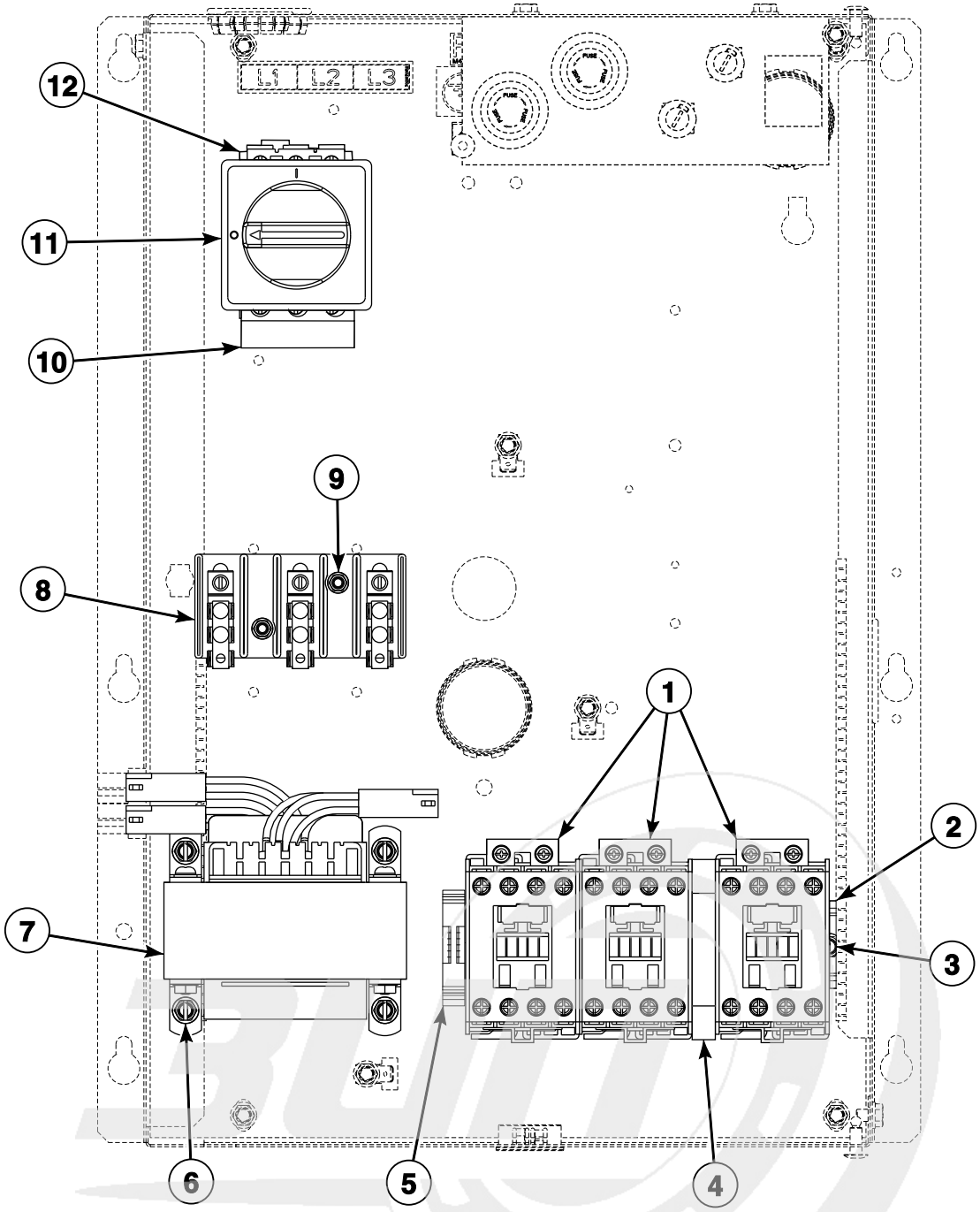

TMB3097P_70421801

info@zipnasklade.ru
8(800)500-69-51

© Copyright, Alliance Laundry Systems LLC – DO NOT COPY or TRANSMIT

Control Tray Components for Steam Models

REF	PART NO.	DESCRIPTION	COMMENTS
1	70323701P	Contactor	Nonreversing 1 required, reversing 3 required
2	M412693	Din Rail	
3	430497	Screw	2 required
4	F330186P	Interlock Contactor	Reversing
5	70121001	End Stop	
6	M411072	Screw	4 required
7	M414228P	Transformer	Multitap; 100-240 Volt
	M414229P	Transformer	Multitap; 380-480 Volt
	44074401	Transformer	Dual secondary; 440 Volt
	M414230P	Transformer	Single secondary; 120 Volt
	M414312P	Transformer	Dual secondary; 120 Volt
8	430642	Terminal Block	Use 70333001 Terminal Block Shield to protect terminal block
9	51783	Screw	2 required
10	M412366	Finger Guard	CE models through 7/31/11
11	M412208	Handle	CE models through 7/31/11; 44160701 Extension Handle attaches to operator handle; M412368 Door Interlock mounts under operator handle
	44160701	Extension Handle	
	M412368	Door Interlock	
12	M412187P	Mounting Switch Base	CE models through 7/31/11; Use 51782 Screw to attach

info@zipnasklade.ru
8(800)500-69-51

© Copyright, Alliance Laundry Systems LLC – DO NOT COPY or TRANSMIT

Control Tray Harnesses for Electric Models

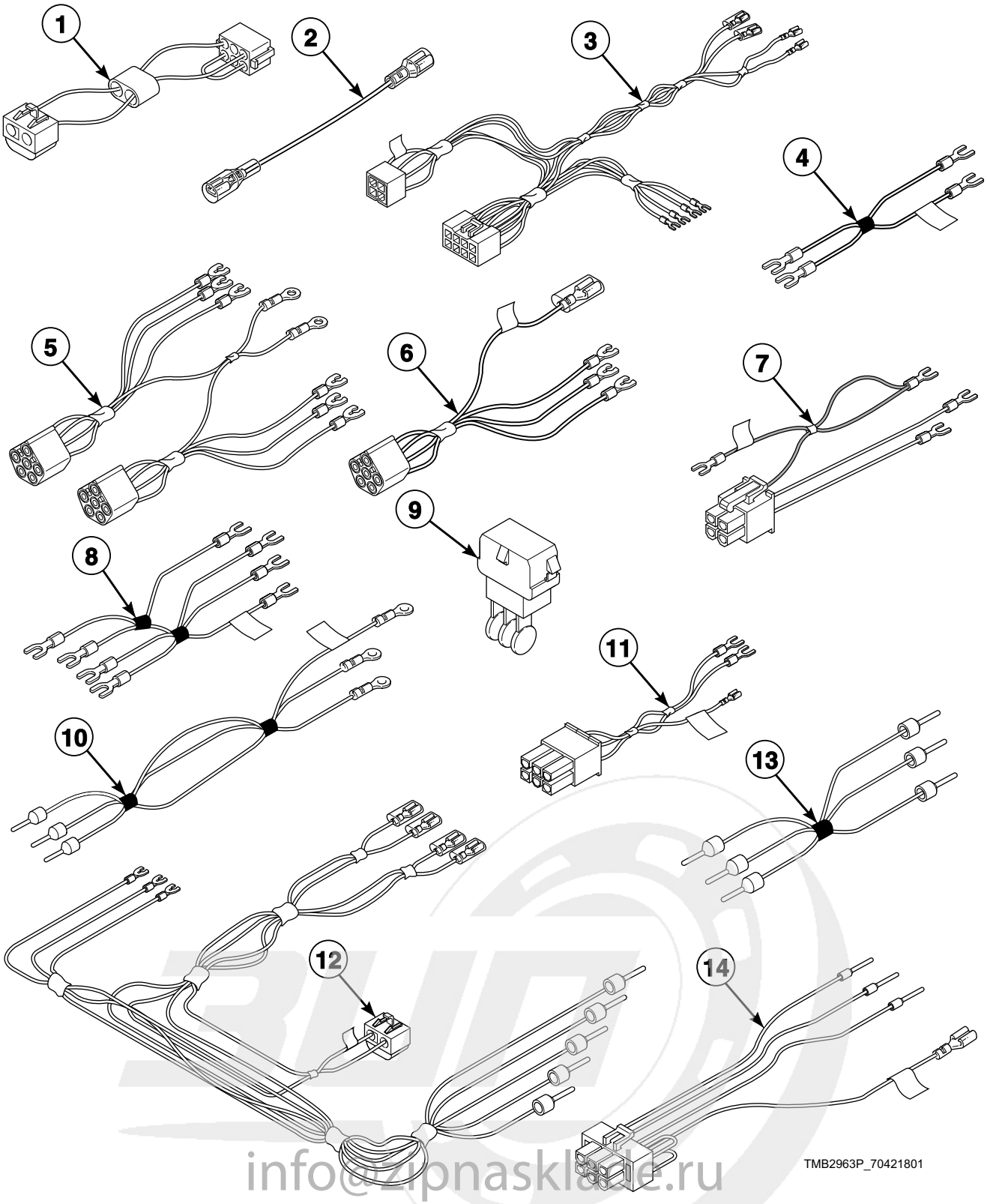

info@zipnasklade.ru
8(800)500-69-51

© Copyright, Alliance Laundry Systems LLC – DO NOT COPY or TRANSMIT

Control Tray Harnesses for Electric Models

REF	PART NO.	DESCRIPTION	COMMENTS
1	M413506	Jumper Harness Assembly	208 Volt
	M413507	Jumper Configuration Assembly	240 Volt
	M413508	Jumper Harness Assembly	380 Volt
	M413509	Jumper Harness Assembly	415 Volt
	M413510	Jumper Configuration Assembly	480 Volt
2	44014501	Jumper Wire	6 gauge; 4.5 inches
3	44136701P	Junction Box Harness	
4	70355801P	Electric Contactor Jumper Set Harness	
5	44139901P	Motor Contactor Harness	1 Phase; Reversing
	44142601P	Motor Contactor Harness	3 Phase; Reversing
6	44137001P	Motor Contactor Harness	3 Phase
	44136401	Motor Contactor Harness	1 Phase
7	44139601P	Reversing Contactor Harness	
8	44157401	Reversing Contactor Jumper Wire	1 Phase; Upper
	44139501	Reversing Contactor Jumper	1 Phase; Lower
	44136801	Reversing Contactor Jumper Assembly	Upper
	44136901	Reversing Contactor Jumper Assembly	Lower
9	M413863	Network Capacitor Assembly	
10	44151801P	Heater Cable Set	H1-H3
	44151901P	Heater Cable Set	H4-H6
11	44150701P	Electric Configuration Harness	
12	44150901	Power Harness	3 Phase models with less than 380 Volts
	44151001	Power Harness	3 Phase models with 380 Volts or higher
	44139801P	Power Harness	1 Phase
13	44151101	Cable Set	CB1 Power; CE models
	44151201	Cable Set Assembly	CB2 Power; CE models
	44151301	Cable Set Assembly	CB3 Power; CE models
	44151401	Cable Set Assembly	CB2 to HC2
	44151601	Cable Set	PDB to HC1
	44151701	Cable Set	PDB to HC2
	44155301	Cable Set Assembly	CB3 to HC1
14	44152001	Network Capacitor Harness Assembly	

info@zipnasklade.ru
8(800)500-69-51

© Copyright, Alliance Laundry Systems LLC – DO NOT COPY or TRANSMIT

Control Tray Components for Non-CE Electric Models

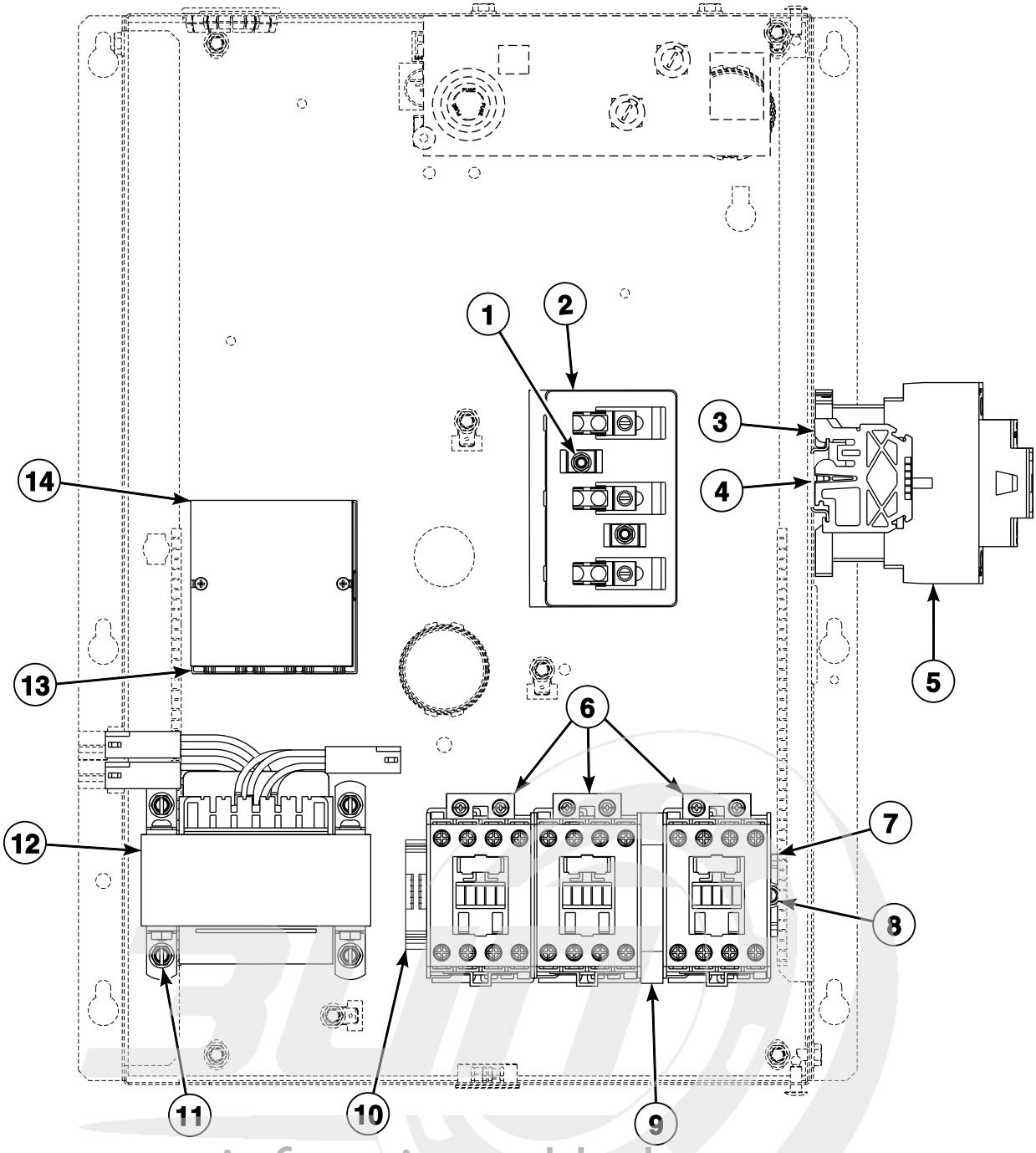

info@zipnasklade.ru
8(800)500-69-51

© Copyright, Alliance Laundry Systems LLC – DO NOT COPY or TRANSMIT

Control Tray Components for Non-CE Electric Models

REF	PART NO.	DESCRIPTION	COMMENTS
1	51783	Screw	240 Volt/50 Hertz/1 Phase; 2 required
2	430642	Terminal Block	240 Volt/50 Hertz/1 Phase; Use 70333001 Terminal Block Shield to protect terminal block
3	70121001	End Stop	2 required
4	M412690	Din Rail	
5	70343301P	Contactor	Heat; Models with 380 Volts or higher 1 required; models with less than 380 Volts 2 required
6	70323701P	Contactor	Motor; Nonreversing 1 required; reversing 3 required
7	M412693	Din Rail	
8	430497	Screw	2 required
9	F330186P	Interlock Contactor	Reversing
10	70121001	End Stop	
11	M411072	Screw	4 required
12	M414228P	Transformer	Multitap; 100-240 Volt
	M414229P	Transformer	Multitap; 380-480 Volt
	44074401	Transformer	Dual secondary; 440 Volt
13	M413865	Terminal Block	Use 39733 Screw to attach
14	44014901P	Power Distribution Block Cover	Mounts over top of item 13 for protection

info@zipnasklade.ru
8(800)500-69-51

© Copyright, Alliance Laundry Systems LLC – DO NOT COPY or TRANSMIT

Control Tray Components for CE Electric Models

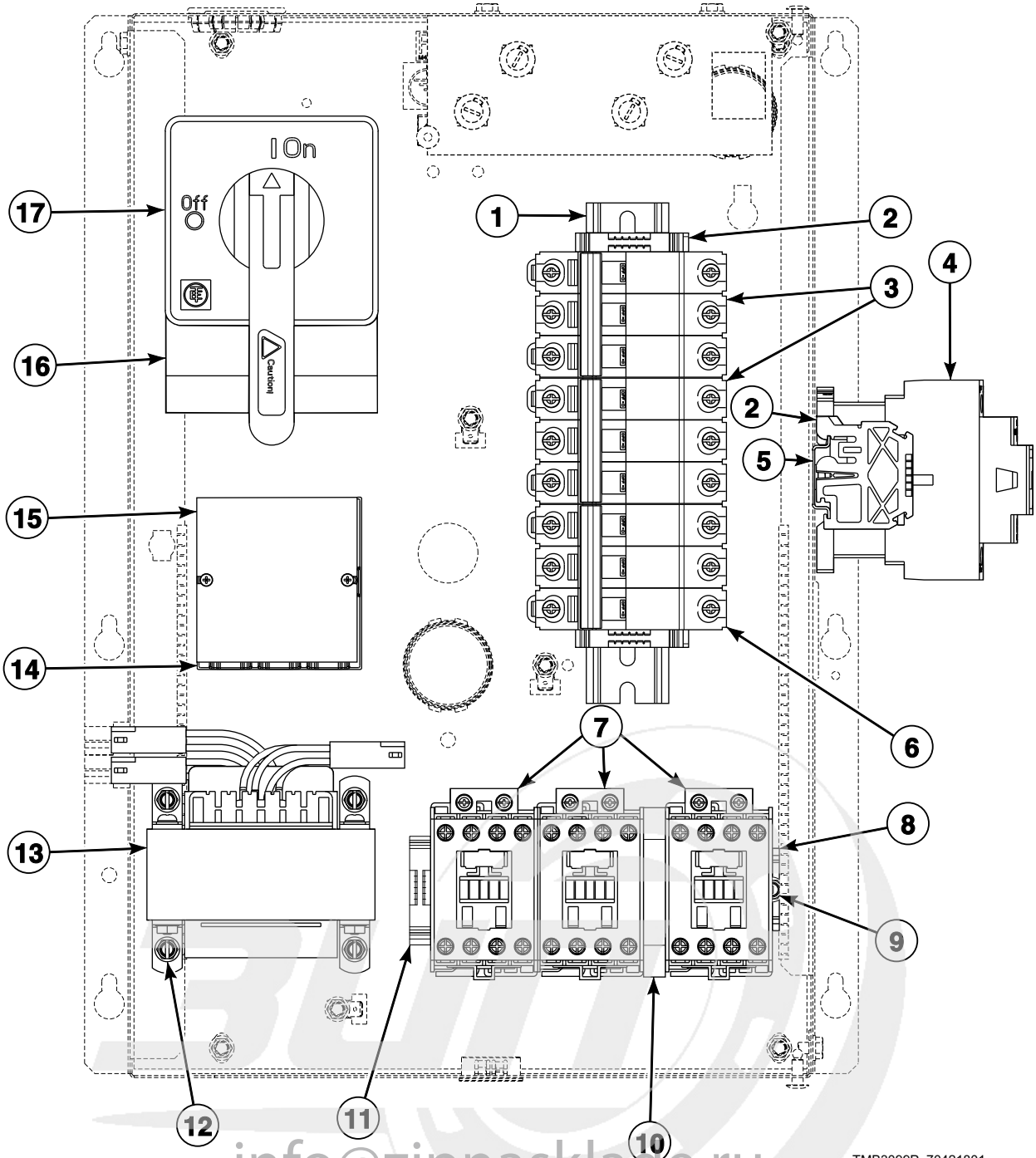

info@zipnasklade.ru
8(800)500-69-51

© Copyright, Alliance Laundry Systems LLC – DO NOT COPY or TRANSMIT

Control Tray Components for CE Electric Models

REF	PART NO.	DESCRIPTION	COMMENTS
1	N/A	Din Rail	Use 2 of 430497 Screw to attach
2	70121001	End Stop	3 required
3	M412408P	Circuit Breaker	2 required for 230 Volt/50 Hertz/3 Phase
4	70343301P	Contactor	Heat; Models with 380 Volts or higher 1 required; models with less than 380 Volts 2 required
5	M412690	Din Rail	Use 2 of 430497 Screw to attach
6	M412407P	Circuit Breaker	
7	70323701P	Contactor	Motor; Nonreversing 1 required; reversing 3 required
8	M412693	Din Rail	Use 2 of 430497 Screw to attach
9	430497	Screw	2 required
10	F330186P	Interlock Contactor	Reversing
11	70121001	End Stop	
12	M411072	Screw	4 required
13	M414228P	Transformer	Multitap; 100-240 Volt
	M414229P	Transformer	Multitap; 380-480 Volt
	44074401	Transformer	Dual secondary; 440 Volt
14	M413865	Terminal Block	Use 39733 Screw to attach
15	44014901P	Power Distribution Block Cover	Mounts over top of item 14 for protection
16	M412367	Finger Guard	Models through 7/31/11
17	70268001	Handle	Models through 7/31/11; M412371P Extension Handle attaches to operator handle; M412369 Door Interlock mounts under operator handle; Whole assembly mounts to M412186 Mounting Base which is attached with 2 of 33562 Screw
	M412371P	Extension Handle	
	M412369	Door Interlock	
	M412186	Mounting Switch Base	

N/A = Part no longer available

info@zipnasklade.ru
8(800)500-69-51

© Copyright, Alliance Laundry Systems LLC – DO NOT COPY or TRANSMIT

Notes

info@zipnasklade.ru
8(800)500-69-51

© Copyright, Alliance Laundry Systems LLC – DO NOT COPY or TRANSMIT

Parts Index

A

Adjustable Buzzer
505447 23

Air Filter
44104201 105

Airflow Switch and Arm Bracket
70319601 103

Airflow Switch Arm
70319401 103

Airflow Switch Assembly
44142901 103

Airflow Switch Cover
44143501 103

Airflow Switch Vane
70319202 103

B

Baffle
44004901 69
44005201 69
44065501 69

Baffle Gasket
70015701 69

Ball Bearing
M401375P 87
44041901P 75

Base Harness Assembly
44137501P 63

Bearing
F100136P 75

Bearing Retainer
M401370 87

Belt
M401182P 83, 85
M412090 79
M412981 ..... 79, 81

Belt Guard
M413008 93
M413541 77

Belt Guard Assembly
44132401 ..... 83, 85
44132402 ..... 79, 81
44132408 85
44132409 81

Belt Idler Assembly
44209001 ..... 81, 85

Blower
44127401P 93

Blower Inlet Cone
70014101 67

Bolt
M400650 75
M401393 ..... 79, 81, 85, 93
M405503 111

Bottom Pan
44000601P 69

Bracket
44065901 17
44207501 107

Bumper
M400795 109

Burner Assembly
M410541P 97

Burner Orifice
M400997 99
M400998 99
M401000 99
M401003 99
M401011 99
M401014 99
M401021 99
M401027 99
M406184 99

Burner Support
44110201 97

Bushing
M412086P 79
M412885P 79
M412917P 79

Bypass Harness
70364103 ..... 21, 25, 27, 31, 41, 49, 51, 53, 57

C

Cable Set
44151101 123
44151601 123
44151701 123

Cable Set Assembly
44151201 123
44151301 123
44151401 123
44155301 123

Cam and Hinge Kit
M4772P3 71
M4773P3 71

Card Reader and Bracket Assembly
510068P 31

Card Reader Overlay
70334201 ..... 31, 33
70334301 ..... 31, 33, 49

Circuit Board Support
501523 17

Circuit Breaker
M412407P 127
M412408P 127

Clean Lint Compartment Sticker
70114001 65

Clip
M400974 105

Coin Chute Assembly
70296401 69

Coin Cover Overlay
70246301 ..... 29, 31

Coin Drop
38963P 35
39748 35

N/A items do not appear in index.

info@zipnaskladе.ru
8(800)500-69-51

© Copyright, Alliance Laundry Systems LLC – DO NOT COPY or TRANSMIT

70256402P 35
70429001 35
70441601P 35

Coin Drop Assembly
210195 35
210196 35
38462P 35
38463 35
38464P 35
38467 35
38472 35
38475 35
38519 35
38521 35
39157 35
44039701P 35
44039702 35
44039703 35
44039704 35
44039705 35
44039706 35
44039707 35
70281102 35
70283102 35
70441602 35
70447301 35
70471601 35
70482401 35

Coin Drop Kit
CK077 35

Coin Drop Overlay
39564 29

Coin Drop Overlay Kit
70321201 29

Coin Drop Switch
CM1100P 35

Coin Identification Paper
38725 35

Coin Vault Assembly
70180101 69

Coin Vault Switch Harness
70364104P 19, 25, 29, 39, 47, 57

Coin Vault Trim
70117501 57
70117502 57

Communication Board
210095P 45

Communication Connector
210099 45

Communication Wire Harness Assembly
800246 43

Cone Plate
44150201 67

Contact Block Switch
F200233401 55

Contact Switch
F8069501 55

Contactor
70323701P 119, 121, 125, 127
70343301P 125, 127

Contactor Box Base
44133701 113

Contactor Box Cover
44134001 113
44134002 113
44134003 113

Contactor Box Side
44158901 113
44159001 113

Control
44063801P 17

Control Assembly
44013601P 27
511867P 29, 31
512202P 21
513139P 19
70434101P 51, 53
70437102P 53
70437103P 53
70437104P 53
70437105P 53
70450501P 39, 41
70450502 ..... 47, 49
70450503 ..... 39, 41
70450504 ..... 47, 49
70454001P 51
70454101P 53
70462305P 25
70462306P 25
70462365P 25
70462366P 25

Control Box Assembly
44180101 15

Control Box Base
44065301 17

Control Box Cover
44065201 17

Control Box Housing
44065101 17

Control Box Top
44065401 17

Control Chassis Mounting Bracket
70357901 ..... 19, 21

Control Conversion Kit
M4797P3 23

Control Door Assembly
70363401 19

Control Door Latch
431318 69

Control Harness
44100101P 21

Control Harness Assembly
44141601P 17

Control Housing Cover
70307001 15
70307002 ..... 15, 43

Control Kit
70228401P 27

Control Overlay
44194801 39
70410001 39
70410002 39
70449501 39
70473001 47
70473002 47
70473003 49

Control Panel
44000117BP 59
44000117*P 59
44000118P 59
44040001*P 59
44040002 59

N/A items do not appear in index.

info@zipnasklade.ru
8(800)500-69-51

© Copyright, Alliance Laundry Systems LLC – DO NOT COPY or TRANSMIT

44040003* ... 59
44040004 ... 59
44040005* ... 59
44040006 ... 59
44040007B ... 59
44040008B ... 59

Control Panel and Door Hinge Kit
M4776P3 ... 59, 71

Control Panel Harness
44240301 ... 51, 53
70315601P ... 25
70335301P ... 27
70341901P ... 23
70342001P ... 23
70358701 ... 31
70367001P ... 21
70369001 ... 19
70382701P ... 27
70398401 ... 19
70410401P ... 39, 41, 47, 49
70429101P ... 29, 31
70429201P ... 29

Control Panel Harness Assembly
70315701 ... 25
70341801P ... 23

Control Plate and Studs Assembly
70440901 ... 53

Control Plate Assembly
44040901 ... 23
44041001 ... 23
70175805 ... 27
70336501 ... 49
70348801 ... 31, 33, 41
70360601 ... 21
70432101 ... 51
70475601 ... 51

Control Plate Kit
44050701P ... 25
70291001P ... 29, 31, 39, 47

Control Trim
44016301 ... 57
44016401 ... 57

Cover Plate
M401362 ... 93

Cylinder and Trunnion Assembly
44057401P ... 73
44057402P ... 73
44057403 ... 73
44057404 ... 73
44089101 ... 73
44131002 ... 73
44131102 ... 73
44195601 ... 73
44195602 ... 73
44195603 ... 73
44195604 ... 73
44195605 ... 73
44195606 ... 73
44195607 ... 73

Cylinder Assembly
44089001 ... 73
44130802 ... 73
44196301 ... 73
44196302 ... 73
44196303 ... 73

Cylinder Kit
44057001P ... 73
44057101P ... 73

Cylinder Motor Harness
44137101P ... 77
44139701P ... 77

Cylinder Rib Assembly
44191201 ... 73

D

Deflector Cover
44162301 ... 67

Din Rail
M412690 ... 125, 127
M412693 ... 119, 121, 125, 127

Display Assembly
512218P ... 21

Door Assembly
44028902P ... 71
44028903 ... 71
44029101 ... 71
44058102P ... 71
44112101 ... 71
70407401 ... 71

Door Glass
44008401P ... 71
44008402P ... 71

Door Glass Installation Tool
M4221P4 ... 71

Door Handle
44007901 ... 71
44057702 ... 71

Door Hinge Assembly
44075203* ... 71
44075204 ... 71
44075208B ... 71

Door Hinge Lug Assembly
44035001 ... 57, 71
44035002 ... 71

Door Interlock
M412368 ... 119, 121
M412369 ... 127

Door Latch
M401223 ... 57

Door Ring
44007703B ... 71
44007704B ... 71

Door Ring and Handle Assembly
44112001 ... 71

Door Ring Assembly
44007702 ... 71

Door Ring Gasket
44008201P ... 71

Door Seal Kit
70211902P ... 71

Door Switch Actuator Kit
70215001P ... 71

Door Switch Harness
44137601 ... 57

Double V Sheave
M412916 ... 79

Drive Rivet
M400713 ... 17

N/A items do not appear in index.

info@zipnasklade.ru
8(800)500-69-51

© Copyright, Alliance Laundry Systems LLC – DO NOT COPY or TRANSMIT

Drum Idler Wheel Assembly
430619 ..... 85, 89

E

Earth Terminal Sticker
M412096 113

Elbow
70079601 97

Electric Accessory Box Cover
44154901 101

Electric Accessory Box Wrap
44154701 101

Electric Configuration Harness
44150701P 123

Electric Contactor Jumper Set Harness
70355801P 123

Electronic Coin Drop Assembly
70294103P 35
70294104 35
70294105P 35
70294106 35
70294107 35
70294111 35
70294116 35
70294117 35
70294119 35
70294120 35
70294121 35

Electronic Coin Drop Harness
44065801 35

Electronic Coin Drop Kit
CK099 37
CK100 37
CK101 37
CK103 37
CK108 37
CK109 37
CK113 37
CK115 37
CK116 37
CK117 37
CK118 37
CK119 37
CK120 37
CK121 37
CK122 37

Electronic Control
44037801P 23

Emergency Stop Contact Harness
70364105P 55

Emergency Stop Harness
70364106P 55

Emergency Stop Label
M412235 55

Emergency Stop Pushbutton
F200233500 55

End Stop
70121001 ..... 119, 121, 125, 127

Ethernet Gateway Kit
NK320 ..... 39, 41, 51

Exhaust Thimble Assembly
M412288 109

Expansion Clip
70030501 ..... 57, 113

Extension Handle
M412371P 127
44160701 ..... 119, 121

Extension Spring
M412120 89

F

Fan Motor
44045901P 95
44046001P 95

Fan Motor Harness
44137201P 93
44169901 93

Felt Pad
M402144 73

Ferrite Core Assembly
M413930P 27

Fill Hose Kit
38349P 17

Filter
44172001 105

Finger Guard
M412366 ..... 119, 121
M412367 127

Fire Suppression System Label
44128901 61

Foam Gasket
70414101 ..... 19, 21, 23, 25, 27, 29, 31, 33, 39, 41, 47, 49

Front Panel Assembly
44077901*P 61
44077902P 61
44077903* 61
44077904P 61
44077905*P 61
44077906P 61
44077907*P 61
44077908P 61

Front Pillar
44001201 63

Fuse
M413621 115
70406501 ..... 27, 115
70406601 115
70406701 115

Fuse Bracket
70306901 115
70313602 115

Fuse Cover
70313301 113

Fuse Holder
44155601P 115

Fuse Holder Body
70329401P 115

Fuse Holder Cap
70329501 115

Fuse Label
70337201 113
70337301 113
70337401 113

info@zipnaskade.ru
8(800)500-69-51

N/A items do not appear in index.

© Copyright, Alliance Laundry Systems LLC – DO NOT COPY or TRANSMIT

G

Gas Disconnect Harness
70342101 117

Gas Stove Assembly
44136001 97

Gas Valve
M413468P 97
44154501P 97
44154502P 97
44178301P 97
44178302P 97
44181601P 97
44181602 97

Gas Valve Bracket
44175701 97

Gas Valve Harness Assembly
M413650 97

Graphic Overlay
44050401 25
44050501 25
44050502 25
44239401 25
44239402 25
44240501 25

Ground Decal
F230739 113

Ground Lug Connector
M411283 113

Guard Extension
44222501 ..... 81, 85

Guide Rail
M412476 ..... 79, 81, 83, 85, 89

H

Handle
M412208 ..... 119, 121
70268001 127

Handle and Caps Assembly
70154405 65
70154406 65

Handle Bar
70399501B 71

Handle Bumper
70407202 65

Harness Assembly
M412997 ..... 97, 105

Heater Box Cover
44153301 101

Heater Cable Set
44151801P 123
44151901P 123

Heater Element
M410939P 101
M410940P 101
M410941P 101
M412955P 101

Heater Side
44154801 101

High Temperature Ignition Lead
44061602P 97

High Voltage Suppression Cable
44239704 97

Hold-Down Clip
35865 67

Hole Plug
F8223801 113

Hose
44073301 17

Hose Clamp
36801 17

Hose Fitting
44069101 17

Housing and Trunnion Assembly
M4644P3 75
M4645P3 75

I

Idler Arm
44102701 ..... 85, 89

Idler Housing
M412612 87

Idler Housing Assembly
44107101 ..... 81, 85

Idler Housing Kit
917P3 87
943P3P 89

Idler Shaft
M414241 87

Idler/Belt Assembly Kit
942P3P 89

Ignition Control
70367301P 119
70367401P 119
70458601P 119
70458701P 119

Ignition Control Harness
44136601P 117
44186701 117
44186901 117

Insulation
44020601 59
44150102 69
44150103 69

Interlock Contactor
F330186P 119, 121, 125, 127

J

Jumper Bar
M400866 101

Jumper Calibration Wire
70084304 27
70084305 27
70324604 ..... 19, 21, 25, 29, 31, 39, 41, 47, 49, 51, 53

Jumper Configuration Assembly
M413507 ..... 117, 123
M413510 ..... 117, 123

Jumper Harness Assembly
M413506 ..... 117, 123
M413508 ..... 117, 123
M413509 123

N/A items do not appear in index.

info@zipmaskbade.ru
8(800)500 60 51

© Copyright, Alliance Laundry Systems LLC – DO NOT COPY or TRANSMIT

Jumper Set Assembly
44042701 23
44042801 23
Jumper Strip
M400869 101
Jumper Wire
44014501 123
Jumper Wire Assembly
M412287 101
Junction Box Harness
44136701P 117, 123

K

Key
M400008 ..... 73, 83
M400993 ..... 87, 93
M401327 ..... 83, 87, 89
M405232 73
44132301 93
70155601 ..... 17, 57
70155602 57
Key and Instruction Kit
M400994P 93
Kickplate
70117607 65
70117608 65

L

Label
44108201 61
44190901 61
70414001 61
Latch Mounting Bracket
44003201 69
Light
801431 19
801432 17
Limit Thermostat
M409433 97
M410542 ..... 67, 101
M411813 67
Lint Panel
44000001*P 65
44000002P 65
Lint Panel Switch Bracket
44118601 63
Lint Screen
44063601 67
Lint Screen Deflector
44162201 67
Loading Spring
M400401 87
Lock, Key and Nut Kit
44089301P 17, 57
44089302P 57
Low Pressure Steam Cover
M400828 105
L.P. Conversion Kit
M4544P3 97
M4979P3 97
L.P. Gas Valve Kit
M4897P3 97

M

Main Harness
44137401P 15
44187001 15
Male Tab Terminal
00177 ..... 19, 21, 23, 113
Manifold
44073601 17
Manifold Pipe
44040501 97
Manifold Pipe Assembly
M406681 97
Manual Reset Thermostat
M411938 97
M411941 67
Membrane Switch
M414368P 27
44037901P 23
44039402P 23
Micro V Belt
M411425P 81, 83, 85
Micro V Pulley
M411466P 81, 85, 89
Micro V Sheave
M412156 ..... 81, 83, 85
Mixing Valve
36958P 17
Moisture Sensor Harness Assembly
70448901 91
Moisture Sensor Test Wires
70468901 91
Motor
44045701P 95
44045801P 95
44046101P 95
44048701P 95
Motor Bracket
44117201 ..... 79, 81, 83, 85, 93
Motor Contactor Harness
44136401 ..... 117, 123
44137001P 117, 123
44139901P 117, 123
44142601P 117, 123
Motor Hardware Kit
M4426P3 93
Motor Kit
M412519P 77
M412520P 77
Motor Mount Assembly
M413617 77
Motor Switch
M414563 77
Mounting Plate
70208801 ..... 31, 33, 41, 49
Mounting Switch Base
M412186 127
M412187P 119, 121

info@zipnasklade.ru
8(800)500-6061

N/A items do not appear in index.

© Copyright, Alliance Laundry Systems LLC – DO NOT COPY or TRANSMIT

N

Nameplate
- B12389801 ... 59
- 44010401 ... 59
- 44010601 ... 59
- 44062901 ... 59
- 44129904 ... 59
- 70243901 ... 59

Nameplate Overlay
- 44104501 ... 59
- 44130301 ... 59
- 44144401 ... 71
- 44235401 ... 59
- 70380701 ... 59
- 70410201 ... 59
- 70411401 ... 71

Network Board Assembly
- 201341 ... 43, 45

Network Board Bracket
- 44143601 ... 45

Network Board Cover
- 44143701 ... 45

Network Capacitor Assembly
- M413863 ... 117, 123

Network Capacitor Harness Assembly
- 44143401P ... 117
- 44152001 ... 123

Network Controller Kit
- NK220 ... 39, 41, 51

Network Harness
- 44141801P ... 43

Network Retrofit Kit
- NK208 ... 39, 41, 51

Network Wire Harness Assembly
- 44088501P ... 43

Nut
- F430232 ... 113
- H88412101 ... 79, 81, 83, 85, 89
- M400022 ... 93
- M400026 ... 75, 79, 81, 83, 85
- M400034 ... 93
- M400035 ... 81, 83, 85, 91
- M400977 ... 57
- M401548 ... 97
- M404993 ... 73
- M412986 ... 77
- M414215 ... 71
- 02428 ... 77, 79, 81, 85, 93
- 20274 ... 79, 81, 85, 93, 111
- 21899 ... 69
- 23951 ... 65, 71
- 24205 ... 19, 21
- 29786 ... 19, 25, 29, 39
- 29787 ... 23, 25
- 44071201 ... 71
- 44087201 ... 85, 89
- 51236 ... 65
- 56156 ... 85, 89
- 70030401 ... 69
- 70054 ... 19, 21, 23, 27, 31, 33, 47, 51, 53, 101
- 70142 ... 77

O

Opto Coupler
- 200674P ... 35

Output Harness
- 44186101 ... 51, 53

Overlay
- 44130001 ... 27
- 44130002 ... 27
- 70115801 ... 27
- 70128401 ... 27
- 70128601 ... 27
- 70128701 ... 27
- 70129501 ... 29
- 70129601 ... 29
- 70130301 ... 27
- 70130401 ... 27
- 70130501 ... 27
- 70130601 ... 27
- 70130701 ... 27
- 70135301 ... 27
- 70257701 ... 29
- 70257702 ... 29
- 70257703 ... 31, 33
- 70258001 ... 29
- 70258002 ... 29
- 70258003 ... 31, 33
- 70259001 ... 29, 31
- 70261001 ... 29
- 70261002 ... 29
- 70261003 ... 31
- 70261201 ... 29
- 70261202 ... 29
- 70266701 ... 31
- 70266801 ... 31
- 70275401 ... 29
- 70286701 ... 29
- 70321001 ... 29
- 70362201 ... 21
- 70362202 ... 21
- 70362401 ... 21
- 70362402 ... 21
- 70362501 ... 21
- 70362502 ... 21
- 70362901 ... 19
- 70363001 ... 19
- 70410003 ... 41
- 70432201 ... 51
- 70445001 ... 53
- 70445002 ... 53
- 70445003 ... 53
- 70445004 ... 53
- 70453001 ... 29
- 70453002 ... 29
- 70453101 ... 31, 33
- 70462401 ... 53
- 70462402 ... 53
- 70462701 ... 53
- 70462702 ... 53
- 70462901 ... 53
- 70462902 ... 53
- 70472201 ... 53
- 70472202 ... 53
- 70472401 ... 53
- 70472402 ... 53

info@zipnasklade.ru
8(800)500-69-51

N/A items do not appear in index.

© Copyright, Alliance Laundry Systems LLC – DO NOT COPY or TRANSMIT

P

Panel Locator
56079 ..... 57, 65

PC Board Standoff
210098 45

Pipe Bracket
44175801 113

Pipe Clamp
44155201 97

Pipe Nipple
431486 97
70210201 97
70263801 97

Pipe Tee
44231901 97

Plug
M400985 113

Pop Rivet
M400003 ..... 57, 69
70058501 ..... 71, 113
70058502 113
70126301 ..... 65, 71
70126401 65

Porcelain Touch-Up Paint
122P4P 69
370P4P 69

Power Distribution Block Cover
44014901P 125, 127

Power Harness
44136201P 117
44136301P 117
44139801P 117, 123
44150901 123
44151001 123
44250001 117

Pressure Fitting
44231601 97

Proximity Bracket
44044501 107

Pulley
M412884 79
M414564 93
M414565 77
M414566 93
M414567 77
44233601 77

Pushbutton Switch
M413431 119
70413301 ..... 29, 31, 33, 39, 41, 47, 49, 57

Push-to-Start Switch
801434W 17

R

RC Filter Kit
M4457P3 27

Rear Access Plate
44136101 97

Rear Panel Assembly
44170401P 69, 103, 111

Relay
M412534 27

Relay/Buzzer Bracket
44041701 23

Resilient Ring Kit
M4525P3P 93

Reversing Contactor Harness
44139601P 117, 123

Reversing Contactor Jumper
44139501 ..... 117, 123

Reversing Contactor Jumper Assembly
44136801 ..... 117, 123
44136901 ..... 117, 123

Reversing Contactor Jumper Wire
44157401 ..... 117, 123

Rib Rod
M401411 73

Rib Wire
44208601 73

Ring
M400399 ..... 83, 89

Rocker Switch
44099601 21
70455101 ..... 19, 21
70461301 21

Roller Bracket Assembly
70404001 65

Roller Catch Arm
70030301 65

Roller Catch Spacer
70030201 65

Roller Catch Wheel
70297601 65

Rotation Sensor
F8066201 107

Rotation Sensor Harness
F8066401 107
70476101 107

Rotation Sensor Kit
7009P 107

S

Screw
F430909 113
F8206901 113
M400043 ..... 79, 81, 83, 85, 89
M400044 71
M400056 ..... 77, 85, 89
M400057 ..... 77, 79, 81, 85, 93
M400061 ..... 79, 81, 83, 85
M400063 75
M400065 ..... 83, 89
M400077 ..... 81, 85, 89, 93
M400661 71
M402797 97
M405188 ..... 105, 109
M410059 93
M411072 ..... 57, 109, 119, 121, 125, 127
M412627 ..... 79, 81, 83, 85, 89
M413565 77
33562 ..... 101, 105
38272 119
430497 ..... 17, 43, 63, 67, 93, 97, 101, 103, 105, 119, 121, 125, 127
430648 ..... 85, 89

N/A items do not appear in index.

info@zipnasklade.ru
8(800)500-69-51

© Copyright, Alliance Laundry Systems LLC – DO NOT COPY or TRANSMIT

430757 ..... 65, 103
431287 69
44083001 119
501524 ..... 19, 21, 29, 31, 33, 39, 41, 47, 49, 51, 53
51780 17
51783 ..... 119, 121, 125
61199 71
70033502 ..... 57, 71
70069901 ..... 19, 21, 27, 51
70072801 65
70132301 65
70182601 57
70187201 ..... 75, 87
70240301 ..... 97, 101
70247701 69
70275801 57
70409801 71
70442101 71

Sensor Harness Assembly
44141701P 17

Shadow Box Clip
M400972 57

Shaft Wire
44208701 73

Sheave Kit
44086901P 81, 83, 85, 89

Side Panel
44056701* 69

Side Panel and Bracket Assembly
44056801* 69

Single V Sheave
M412931 79

Sleeve
44050601 25

Slip Ring Assembly
44240201 91

Slip Ring Holder
44224401 91

Slot Card Plate Assembly
44089501 ..... 33, 41, 49

Snap Bushing
M400770 ..... 43, 63
M405340 113
M411826 63
44071501 113
70178701 ..... 17, 113

Solenoid Valve DIN Connector
70370301P 105

Spacer
M401402 73
44024001 ..... 79, 81, 85

Spark Electrode
44253701 97

Spark Igniter
M406934P 97

Spray Paint
298P4P 69

Spud Holder Assembly
M410546 97

Steam Coil
M400637P 105

Steam Configuration Harness
44142801 117

Steam Heater Assembly
44020401P 105

Steam Pressure Label
902303 105

Steam Solenoid
70351011P 105
70351012 105

Steam Stand Box
44007501 105

Steam Stove Limit Bypass Harness
70389901 117

Steam Valve
F8322902 105
F8322903 105
70351001P 105

Steam Valve Rebuild Kit
70351021P 105

Switch
70411901 103

Switch Assembly
70413401 63

Switch Bracket
70356301 ..... 101, 103

Switch Hole Plug
44057801B 57
44057801Q 57
44057801W 57

Switch Plate
M413236 21

T

Temperature Control Bracket
44018601 27

Temperature Knob
44104601 ..... 19, 21

Temperature Selector Bracket
70350201 19

Temperature Selector Switch
511711 ..... 19, 21

Temperature Selector Switch Bracket
70391701 21

Tension Plate Assembly
M414405 ..... 79, 81, 83, 85, 89

Terminal Block
M413865 ..... 125, 127
430642 ..... 119, 121, 125

Thermistor
M414704 67
44064701 17

Thimble Vane Assembly
M400503 109

Top Cover
M414759 105
44139301 69

Top Cover Pan
44135001P 69

Top Panel Bracket
44129401 69

Top Rear Panel
44170501 69
44176201 69

Transformer
M414228P 119, 121, 125, 127
M414229P 119, 121, 125, 127

N/A items do not appear in index.

info@zipnasklade.ru
8(800)500-6951

© Copyright, Alliance Laundry Systems LLC – DO NOT COPY or TRANSMIT

M414230P 119, 121
M414312P 119, 121
44074401 ..... 119, 121, 125, 127

Trunnion and Bearing Assembly
M4640P3 75
M4641P3 75

Trunnion Assembly
M413836 73
44207901 73
44208001 73

Trunnion Housing
M413826 75

Trunnion Housing Assembly
M413832 75

Trunnion Kit
44261801 73

Tumbler Dolly Kit
M4379P4 57

U

USB Gateway Kit
NK330 ..... 39, 41, 51

V

Valve Rebuild Kit
F8379502 105

Valve Replacement Kit
M4908P3 97
M4909P3 97

W

Warning Label
M410892 61

Washer
M400013 ..... 77, 79, 81, 85, 93
M400014 ..... 79, 81, 83, 85, 93, 111
M400080 ..... 77, 79, 81, 83, 85, 89, 93, 111
M400991 93
M403958 ..... 79, 81, 83, 85, 89
M412188 ..... 79, 81, 83, 85, 89
02834 77
20103 75
70261401 75
70265901 ..... 85, 89
70270301 ..... 85, 89
70409301 71
91200 ..... 73, 75

Water Hose
F200116 17

Wire Guard
201595P 35

Wire Label
70218701 113
70218801 113
70219001 113

Wireless Network Kit
NK301 ..... 39, 41, 51

info@zipnasklade.ru
8(800)500-69-51

N/A items do not appear in index.

© Copyright, Alliance Laundry Systems LLC – DO NOT COPY or TRANSMIT