Drying Tumblers

75 Pound Capacity

Through Serial No. 0904002963

Refer to Page 5 for Model Numbers

Parts

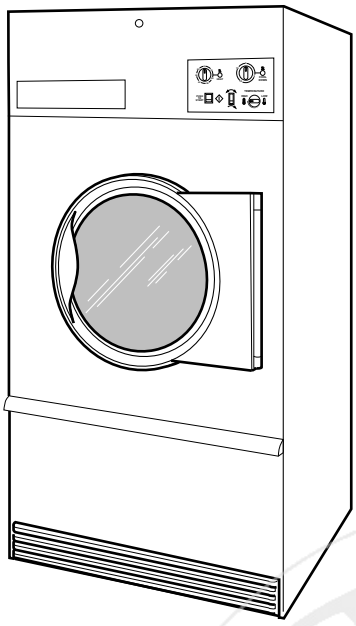

TMB795C_70409201

info@zipnasklade.ru
8(800)500-69-51

Alliance Laundry Systems

www.alliancelaundry.com

Part No. 70409201R10
February 2014

info@zipnasklade.ru
8(800)500-69-51

Table of Contents

Title	Page
Parts Ordering Information	3
Serial Plate Location	3
Model Identification	5
Product Overview - Heat Source and Voltage	6
Product Overview - Control Suffixes (Drawing 1 of 3)	8
Product Overview - Control Suffixes (Drawing 2 of 3)	10
Product Overview - Control Suffixes (Drawing 3 of 3)	12
Control Box	14
Fire Suppression System Control Box	16
Electromechanical Coin Drop	18
Coin Meter	20
Single Drop Controls	22
Manual Dual Timer Controls (Drawing 1 of 2)	24
Manual Dual Timer Controls (Drawing 2 of 2)	26
Dual Digital Timer Controls	28
DMP Control	30
DX4 Electronic Control	32
OPL Microprocessor Controls	34
Coin Drop Components for MDC Models	36
Central Pay and Card Reader MDC Models	38
Optional Card Reader Mountings for MDC Models	40
Coin Drops	42
Coin Drop Kits	44
Coin Drop Components for NetMaster Models	46
Card Reader NetMaster Models	48
Network Connection for NetMaster Models	50
Emergency Stop Button - CE Models and Model UB075E	52
Cabinet Front Components (Drawing 1 of 2)	54
Cabinet Front Components (Drawing 2 of 2)	56
Cabinet Panels and Nameplates (Drawing 1 of 2)	58
Cabinet Panels and Nameplates (Drawing 2 of 2)	60
Front Panel Assemblies (Drawing 1 of 3)	62
Front Panel Assemblies (Drawing 2 of 3)	64
Front Panel Assemblies (Drawing 3 of 3)	66
Lint Panel Switch Assembly - Models Through Serial No. 020802177	68
Lint Panel Switch Assembly - Models Starting Serial No. 020802178	70
Lower Cabinet Front Components	72
Cabinet Limit and Thermistor Assembly	74
Cabinet Components	76
Door and Hinge Components (Drawing 1 of 2)	78
Door and Hinge Components (Drawing 2 of 2)	80

info@zipnasklade.ru
8(800)500-69-51

© Copyright 2014, Alliance Laundry Systems LLC

All rights reserved. No part of the contents of this book may be reproduced or transmitted in any form or by any means without the expressed written consent of the publisher.

Cylinder and Trunnion Components ... 82
Trunnion Housing Components ... 84
Cylinder, Trunnion and Bearing Assemblies and Kits ... 86
Reversing Cylinder Drive Motor and Components ... 88
Drive Components for Reversing Models ... 90
Drive Components for Nonreversing Models ... 92
Idler Housing Assembly for Reversing Models ... 94
Idler Housing Assembly for Nonreversing Models ... 96
Idler Assembly for Nonreversing Models ... 98
Fan Components ... 100
Fan Motors ... 102
Fan Components and Motor for STF, UB and UTF Models ... 104
Gas Heater Components for All Models Except STF and UTF Models (Drawing 1 of 2) ... 106
Gas Heater Components for All Models Except STF and UTF Models (Drawing 2 of 2) ... 108
Burner Orifices for Non-CE Models Except STF and UTF Models ... 110
Gas Heater Components for All Models Except STF and UTF Models - Rear View ... 112
Gas Heater Components for STF and UTF Models ... 114
Electric Heater Components for Non-CE Models ... 116
Electric Heater Components for CE Models ... 118
Airflow Switch Assembly ... 120
Steam Heater and Valve ... 122
Rotation Sensor ... 124
Duct and Damper Assembly ... 126
Rear Panel Assembly ... 128
Contactor Box Assembly Harnesses (Drawing 1 of 3) ... 130
Contactor Box Assembly Harnesses (Drawing 2 of 3) ... 132
Contactor Box Assembly Harnesses (Drawing 3 of 3) ... 134
Contactor Box Assembly (Drawing 1 of 21) ... 136
Contactor Box Assembly (Drawing 2 of 21) ... 138
Contactor Box Assembly (Drawing 3 of 21) ... 140
Contactor Box Assembly (Drawing 4 of 21) ... 142
Contactor Box Assembly (Drawing 5 of 21) ... 144
Contactor Box Assembly (Drawing 6 of 21) ... 146
Contactor Box Assembly (Drawing 7 of 21) ... 148
Contactor Box Assembly (Drawing 8 of 21) ... 150
Contactor Box Assembly (Drawing 9 of 21) ... 152
Contactor Box Assembly (Drawing 10 of 21) ... 154
Contactor Box Assembly (Drawing 11 of 21) ... 156
Contactor Box Assembly (Drawing 12 of 21) ... 158
Contactor Box Assembly (Drawing 13 of 21) ... 160
Contactor Box Assembly (Drawing 14 of 21) ... 162
Contactor Box Assembly (Drawing 15 of 21) ... 164
Contactor Box Assembly (Drawing 16 of 21) ... 166
Contactor Box Assembly (Drawing 17 of 21) ... 168
Contactor Box Assembly (Drawing 18 of 21) ... 170
Contactor Box Assembly (Drawing 19 of 21) ... 172
Contactor Box Assembly (Drawing 20 of 21) ... 174
Contactor Box Assembly (Drawing 21 of 21) ... 176
Parts Index ... 179

info@zipnasklade.ru
8(800)500-69-51

© Copyright, Alliance Laundry Systems LLC – DO NOT COPY or TRANSMIT

Parts Ordering Information

If literature or replacement parts are required, contact the source from whom the machine was purchased or contact Alliance Laundry Systems at (920) 748-3950 for the name and address of the nearest authorized parts distributor.

For technical assistance, call either of the numbers listed below:

(920) 748-3121 Ripon, Wisconsin

+32 56 41 20 54 Wevelgem, Belgium

Serial Plate Location

When calling or writing about your product, be sure to mention model and serial numbers. Model and serial numbers are located on serial plate(s) as shown.

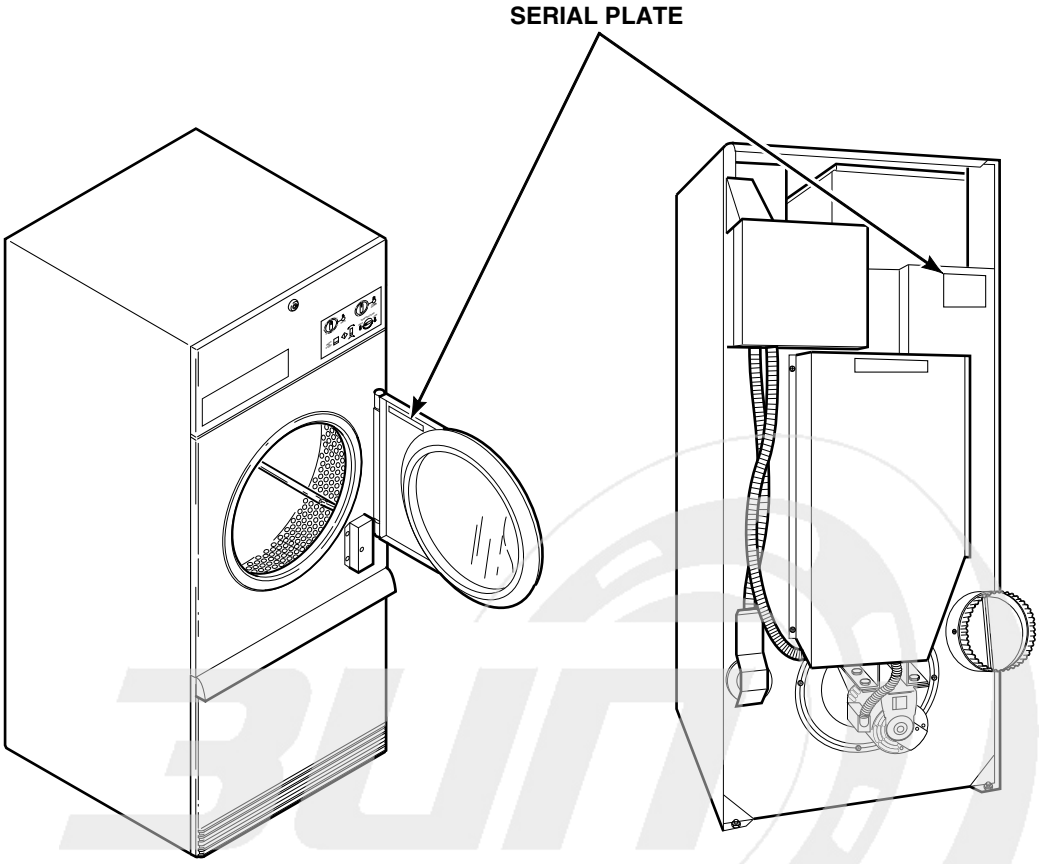

TMB803N_70409201

info@zipnasklade.ru
8(800)500-69-51

© Copyright, Alliance Laundry Systems LLC – DO NOT COPY or TRANSMIT

Notes

info@zipnasklade.ru
8(800)500-69-51

© Copyright, Alliance Laundry Systems LLC – DO NOT COPY or TRANSMIT

Model Identification

Information in this manual is applicable to these tumbler models:

CHD75E2-CT075E
CHD75E2-CU075E
CHD75G2-CA075L
CHD75G2-CA075N
CHD75G2-CT075L
CHD75G2-CT075N
CHD75G2-CU075L
CHD75G2-CU075N
CHD75S2-CT075S
CHD75S2-CU075S
DR80E2-BT075E
DR80E2-BU075E
DR80G2-BA075L
DR80G2-BA075N
DR80G2-BT075D
DR80G2-BT075L
DR80G2-BT075N
DR80G2-BU075L
DR80G2-BU075N
DR80S2-BT075S
DR80S2-BT075T
DR80S2-BU075S
DR80S2-BU075T
AT075E
AT075L
AT075N
AT075S
CT075T
CU075T

GA075L
GA075N
GT075E
GT075L
GT075N
GT075S
GT075T
GU075E
GU075L
GU075N
GU075S
GU075T
HA075L
HA075N
HT075D
HT075E
HT075L
HT075N
HT075S
HT075T
HU075E
HU075L
HU075N
HU075S
HU075T
IPD75E2
IPD75G2
IPD75S2
IT075E
IT075L
IT075N
IT075S
IT075T

KA075L
KA075N
KT075E
KT075L
KT075N
KT075S
KT075T
KU075E
KU075L
KU075N
KU075S
KU075T
LA075L
LA075N
LT075E
LT075L
LT075N
LT075S
LT075T
LU075E
LU075L
LU075N
LU075S
LU075T
NT075L
NT075N

PA075L
PA075N
PT075E
PT075L
PT075N
PT075S
PT075T
PU075E
PU075L
PU075N
PU075S
PU075T
SA075L
SA075N
ST075D
ST075E
ST075L
ST075N
ST075S
ST075T
STF75L
STF75N
SU075E
SU075L
SU075N
SU075S
SU075T

UA075L
UA075N
UB075E
UT075E
UT075L
UT075N
UT075S
UT075T
UTF75L
UTF75N
UU075E
UU075L
UU075N
UU075S
UU075T
YT075E
YT075L
YT075N
YT075S
YT075T
YU075E
YU075S
YU075T

Control Suffixes (7th and 8th characters):

3O - DX4 OPL
3V - DX4 vended
3X - DX4 prep for coin
BC - basic electronic, coin
BL - basic electronic, central pay
BU - basic electronic, prep card-open
BX - basic electronic, prep for coin
BY - basic electronic, prep for card
CD - rotary coin drop
CX - prep for coin drop
CY - prep for card

DO - DMP OPL
DV - DMP vended
DX - DMP prep for coin
MT - manual timer
NC - NetMaster coin
NR - NetMaster card
NX - NetMaster, prep for coin
NY - NetMaster, prep for card
OM - OPL Micro
QT - dual digital timer
R3 - reversing DX4 OPL

RD - reversing DMP OPL
RM - reversing OPL Micro
RQ - reversing dual digital timer
RT - reversing manual timer
SD - single drop
SX - single drop, prep for coin
ZC - NetMaster network, coin
ZR - NetMaster network, card
ZX - NetMaster network, prep for coin
ZY - NetMaster network, prep for card

info@zippasklade.ru
8(800)500-69-51

© Copyright, Alliance Laundry Systems LLC – DO NOT COPY or TRANSMIT

Product Overview - Heat Source and Voltage

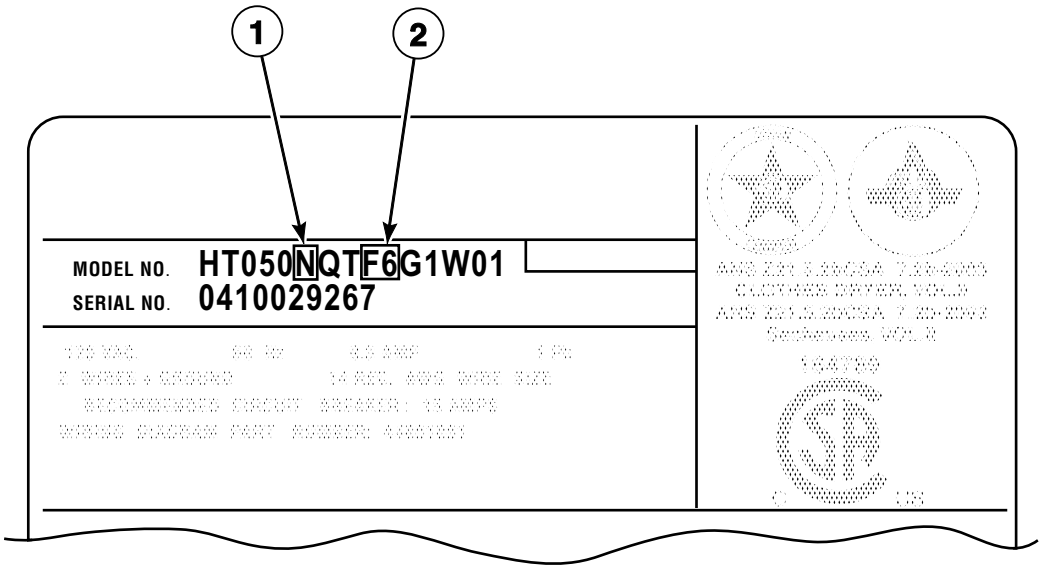

TMB2730P_70409201

info@zipnasklade.ru
8(800)500-69-51

© Copyright, Alliance Laundry Systems LLC – DO NOT COPY or TRANSMIT

Product Overview - Heat Source and Voltage

REF	PART NO.	DESCRIPTION	COMMENTS
1	-	Heat Source	D: Liquid Petroleum Gas (L.P.) E: Electric L: Liquid Petroleum Gas (L.P.) N: Natural Gas (N.G.) S: Steam T: Thermal Oil
2	-	Voltage	B1: 120 Volt/60 Hertz/1 Phase F3: 200-208 or 240 Volt/60 Hertz/1 Phase F4: 200 Volt/50 Hertz/3 Phase F5: 200-208 Volt/60 Hertz/3 Phase F6: 200-208 or 240 Volt/60 Hertz/3 Phase J1: 230 Volt/50 Hertz/1 Phase J2: 230-240 Volt/50 Hertz/1 Phase J3: 240 Volt/50 Hertz/1 Phase J5: 230 Volt/50 Hertz/3 Phase J6: 230-240 Volt/50 Hertz/3 Phase J7: 240 Volt/50 Hertz/3 Phase J8: 240 Volt/60 Hertz/3 Phase M1: 380 Volt/50 Hertz/3 Phase M2: 380 or 400-415 Volt/50 Hertz/3 Phase M3: 380 Volt/60 Hertz/3 Phase N1: 400-415 Volt/50 Hertz/3 Phase P1: 440 Volt/60 Hertz/3 Phase Q1: 460-480 Volt/60 Hertz/3 Phase Q2: 480 Volt/60 Hertz/3 Phase

info@zipnasklade.ru
8(800)500-69-51

© Copyright, Alliance Laundry Systems LLC – DO NOT COPY or TRANSMIT

Product Overview - Control Suffixes (Drawing 1 of 3)

All Models Except G and K Models

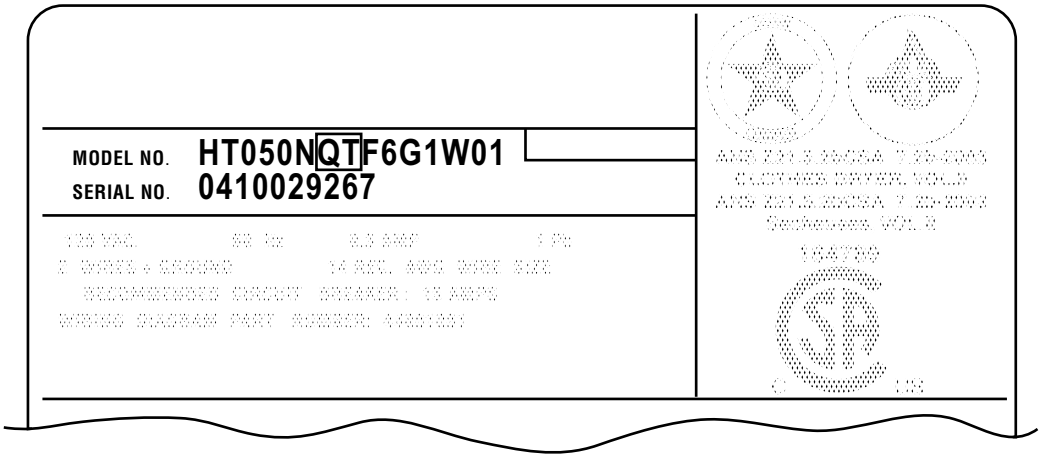

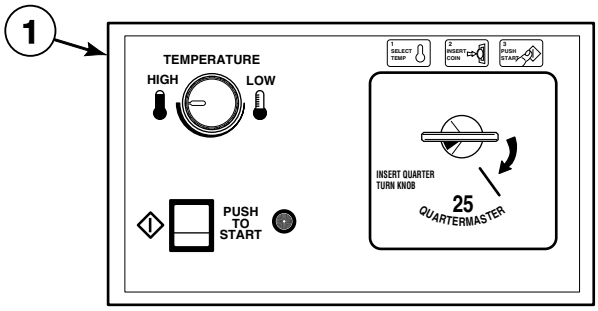

CD, CX and CY Control Suffixes

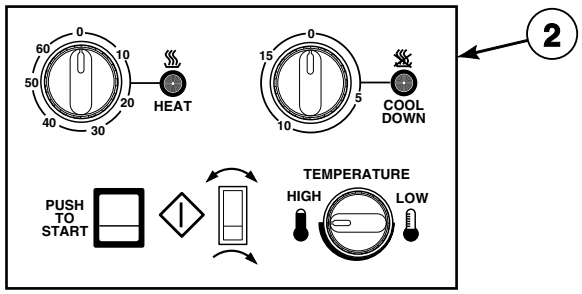

MT and RT Control Suffixes

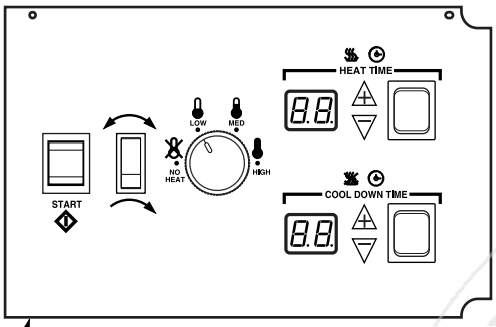

QT and RQ Control Suffixes

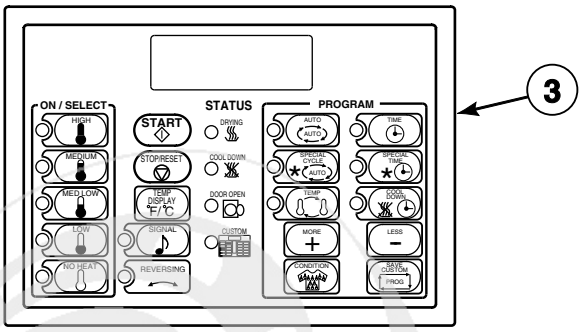

OM and RM Control Suffixes

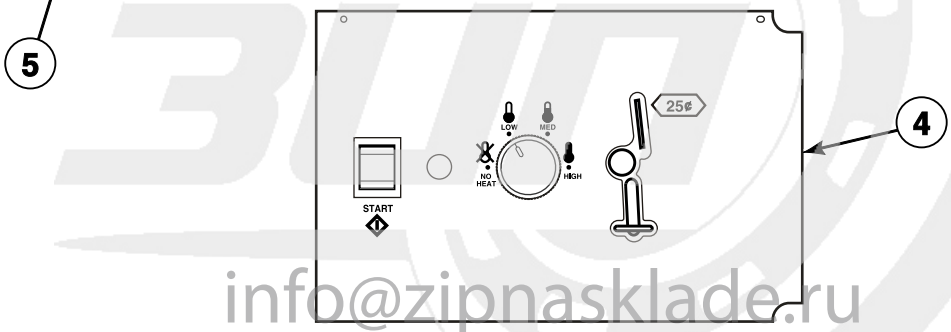

SD and SX Control Suffixes

TMB2725P_70409201

info@zipnasklade.ru
8(800)500-69-51

© Copyright, Alliance Laundry Systems LLC – DO NOT COPY or TRANSMIT

Product Overview - Control Suffixes (Drawing 1 of 3)

REF	PART NO.	DESCRIPTION	COMMENTS
1	-	Control - Nonreversing	CD: rotary coin drop CX: prep for coin CY: prep for card
2	-	Control - Nonreversing	MT: manual timer
	-	Control - Reversing	RT: reversing manual timer
3	-	Control - Nonreversing	OM: OPL micro
	-	Control - Reversing	RM: reversing OPL micro
4	-	Control - Nonreversing	SD: single drop SX: single drop, prep for coin
5	-	Control - Nonreversing	QT: dual digital timer
	-	Control - Reversing	RQ: reversing dual digital timer

NOTE: Coin models have the following control suffixes: CD, CX, SD and SX.

NOTE: OPL models have the following control suffixes: CY, MT, OM, QT, RM, RQ and RT.

info@zipnasklade.ru
8(800)500-69-51

© Copyright, Alliance Laundry Systems LLC – DO NOT COPY or TRANSMIT

Product Overview - Control Suffixes (Drawing 2 of 3)

All Models Except G and K Models

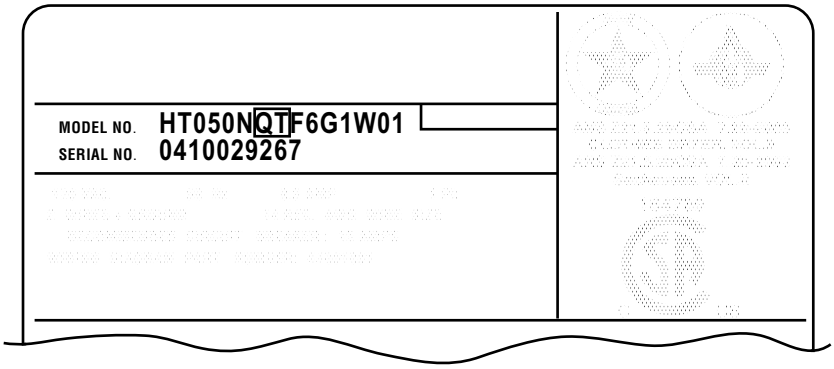

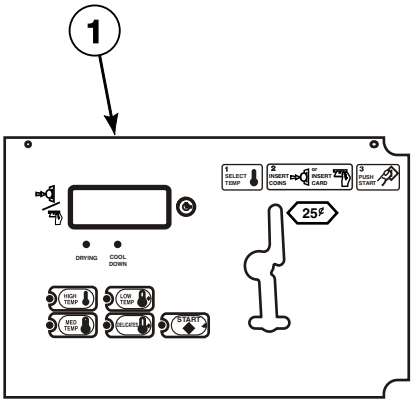

BC and BX Control Suffixes

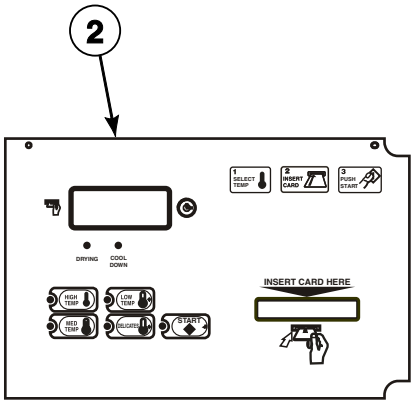

BL, BU and BY Control Suffixes

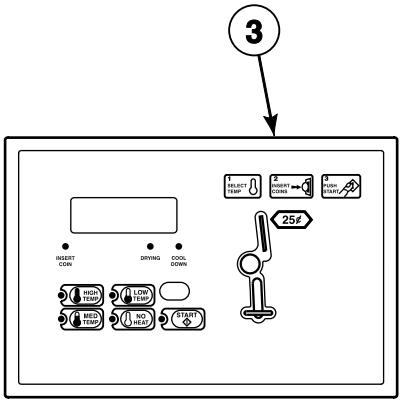

NC, NX, ZC and ZX Control Suffixes

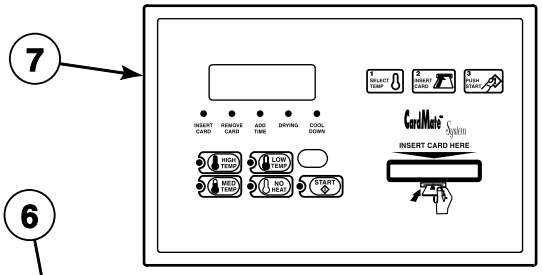

NR, NY, ZR and ZY Control Suffixes

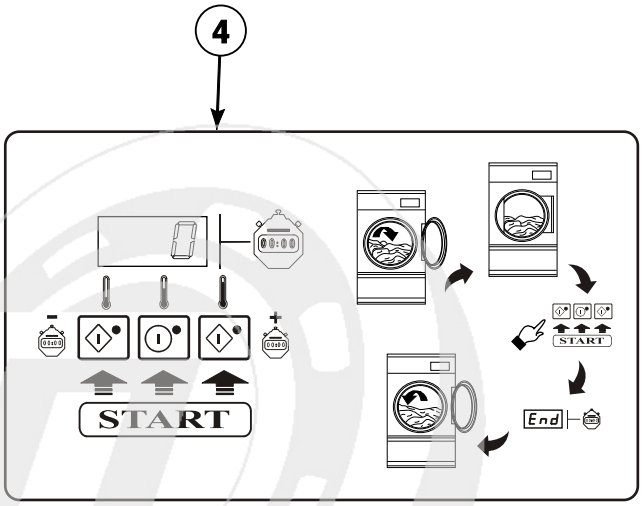

3O, 3V, 3X and R3 Control Suffixes

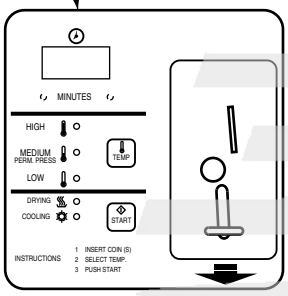

DV and DX Control Suffixes

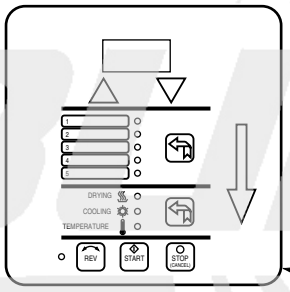

DO and RD Control Suffixes

5

info@zipnasklade.ru
8(800)500-69-51

TMB2727P_70409201

© Copyright, Alliance Laundry Systems LLC – DO NOT COPY or TRANSMIT

Product Overview - Control Suffixes (Drawing 2 of 3)

REF	PART NO.	DESCRIPTION	COMMENTS
1	-	Control - Nonreversing	BC: basic electronic, coin BX: basic electronic, prep for coin
2	-	Control - Nonreversing	BL: basic electronic, central pay BU: basic electronic, prep card-open BY: basic electronic, prep for card
3	-	Control - Nonreversing	NC: NetMaster coin NX: NetMaster, prep for coin ZC: NetMaster network, coin ZX: NetMaster network, prep for coin
4	-	Control - Nonreversing	3O: DX4 OPL 3V: DX4 vended 3X: DX4 prep for coin
	-	Control - Reversing	R3: reversing DX4 OPL
5	-	Control - Nonreversing	DO: DMP OPL
	-	Control - Reversing	RD: reversing DMP OPL
6	-	Control - Nonreversing	DV: DMP vended DX: DMP prep for coin
7	-	Control - Nonreversing	NR: NetMaster card NY: NetMaster, prep for card ZR: NetMaster network, card ZY: NetMaster network, prep for card

NOTE: Coin models have the following control suffixes: 3V, 3X, BC, BX, DV, DX, NC, NX, ZC and ZX.

NOTE: OPL models have the following control suffixes: 3O, BL, BU, BY, DO, NR, NY, R3, RD, ZR and ZY.

info@zipnasklade.ru
8(800)500-69-51

© Copyright, Alliance Laundry Systems LLC – DO NOT COPY or TRANSMIT

Product Overview - Control Suffixes (Drawing 3 of 3)

G and K Models

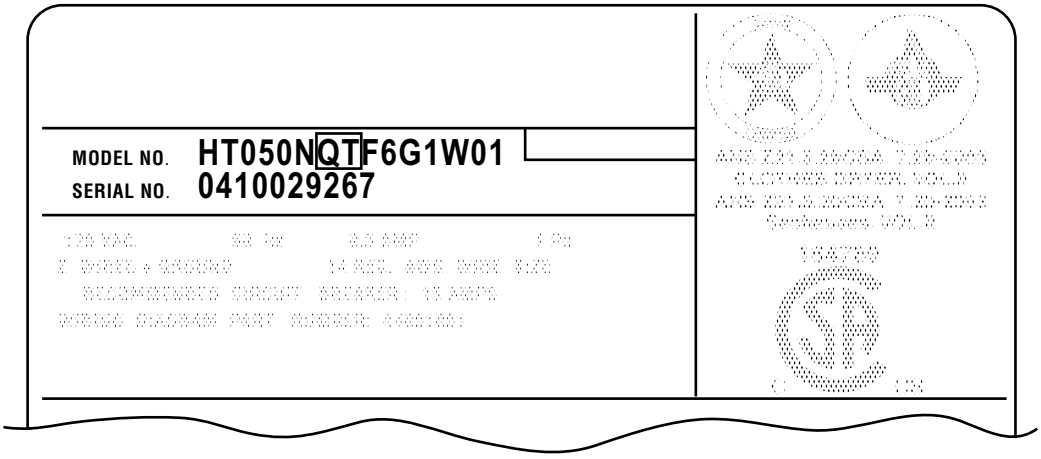

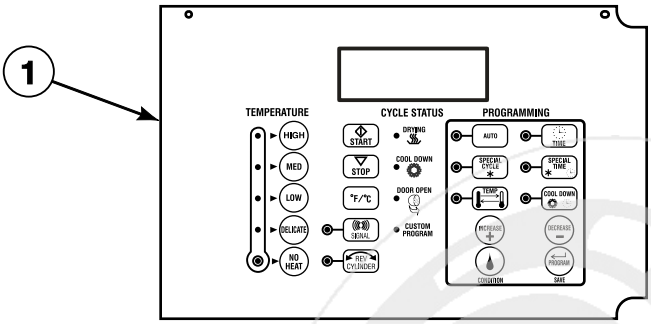

OM and RM Control Suffixes

TMB2726P_70409201

info@zipnasklade.ru
8(800)500-69-51

© Copyright, Alliance Laundry Systems LLC – DO NOT COPY or TRANSMIT

Product Overview - Control Suffixes (Drawing 3 of 3)

REF	PART NO.	DESCRIPTION	COMMENTS
1	-	Control - Nonreversing	OM: OPL micro
	-	Control - Reversing	RM: reversing OPL micro

NOTE: OPL models have the following control suffixes: OM and RM.

info@zipnasklade.ru
8(800)500-69-51

© Copyright, Alliance Laundry Systems LLC – DO NOT COPY or TRANSMIT

Control Box

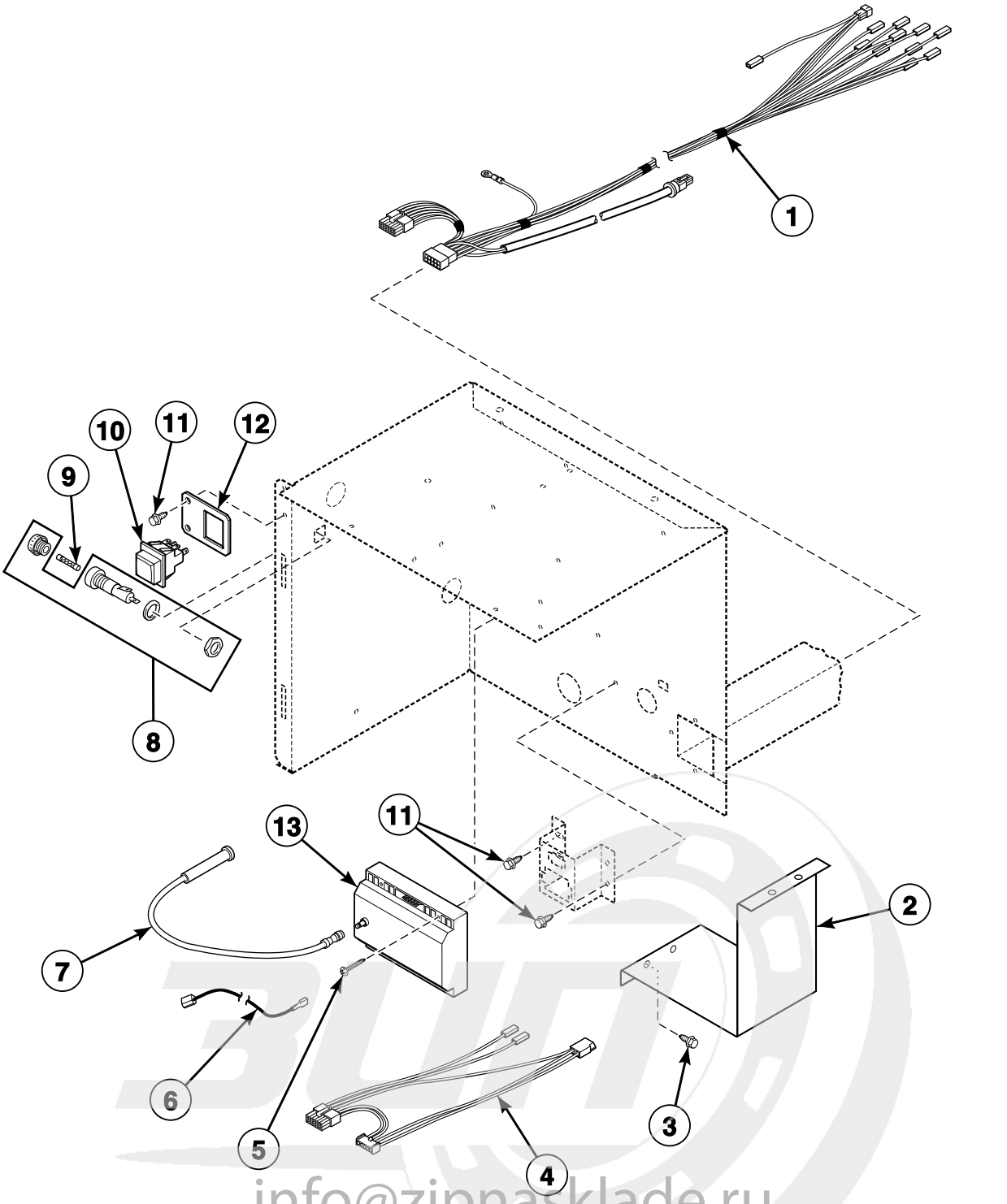

info@zipnasklade.ru
8(800)500-69-51

© Copyright, Alliance Laundry Systems LLC – DO NOT COPY or TRANSMIT

Control Box

REF	PART NO.	DESCRIPTION	COMMENTS
1	44006301P	Main Harness	Non-CE models
	44006501P	Main Harness	CE models with CD, CX, CY, MT and RT control suffixes through Serial No. 0602002257
	44098801	Main Harness	CE models with 3O, 3V, BC, BL, BU, BX, BY, DO, DV, NC, NR, NX, NY, OM, QT, RD, RM, RQ, SD, SX, ZC, ZR, ZX and ZY control suffixes starting Serial No. 0602002258
2	N/A	Ignition Control Shield	All models except C, D and I models; NC, NR, NX, NY, ZC, ZR, ZX and ZY control suffixes
3	51780	Screw	All models except C, D and I models; 4 required
4	M413678P	Control Box Harness Assembly	Non-CE and non-Australian gas models
	M413679	Control Box Harness Assembly	Non-CE and non-Australian steam models; Bypass
	M413680	Control Box Harness Assembly	Non-CE and non-Australian electric models
	M413824	Control Box Harness Assembly	Australian models
	M413993	Control Box Harness Assembly	CE gas models
	44045601	Control Box Harness	CE electric models
	M413168	Bypass Harness Assembly	CE steam models
5	70069901	Screw	Gas models; 2 required
	M411143	Screw	Australian models; 2 required
6	M411061	ICM Return Lead	Australian models
7	44061603	High Temperature Lead	Non-Australian models
	44061604	High Temperature Lead	Australian models
8	91024P	Fuse Receptacle	Non-CE models
9	M414232	Fuse	Non-CE models
10	M413431	Pushbutton Switch	CE gas models; Reset
11	430497	Screw	
12	44005101	Lighted Switch Bracket	CE gas models
13	M410904P	Instant Electronic Ignition Control	Australian models
	70367401P	Ignition Control	CE gas models
	70367301P	Ignition Control	Non-CE and non-Australian gas models

N/A = Part no longer available

info@zipnasklade.ru
8(800)500-69-51

© Copyright, Alliance Laundry Systems LLC – DO NOT COPY or TRANSMIT

Fire Suppression System Control Box

C, D and I Models Starting Serial No. 0609000375 and All A, G, H, K, S and U Models
Models with a F, K, L, T or U in the 11th character (ST075NRTF6K1W01)

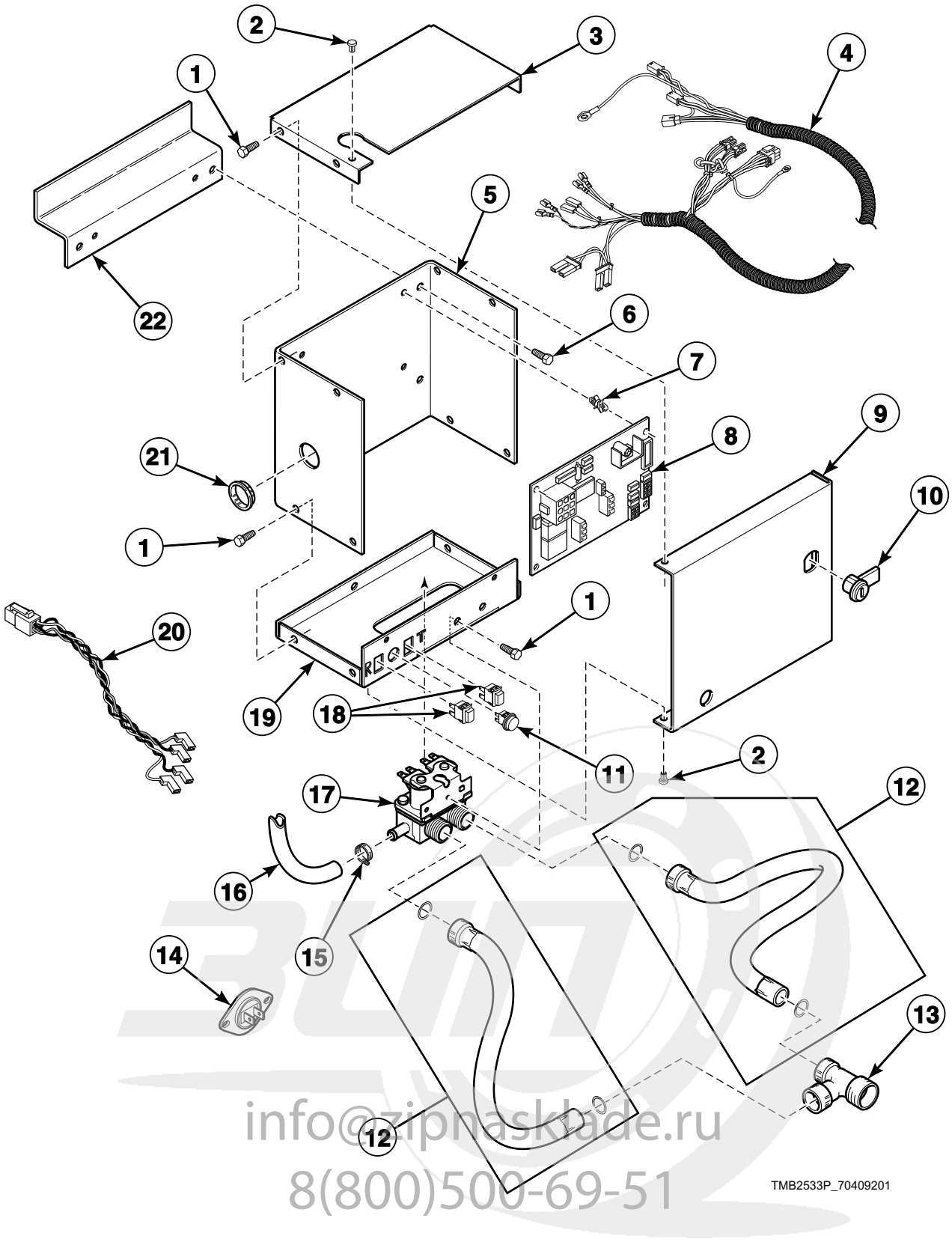

info@zipnasklade.ru
8(800)500-69-51

© Copyright, Alliance Laundry Systems LLC – DO NOT COPY or TRANSMIT

Fire Suppression System Control Box

REF	PART NO.	DESCRIPTION	COMMENTS
1	430497	Screw	
2	M400713	Drive Rivet	
3	44065401	Control Box Top	
4	44076901P	Control Harness	
5	44065101	Control Box Housing	
6	51780	Screw	
7	501523	Circuit Board Support	4 required
8	44063801P	Control	
9	44065201	Control Box Cover	
10	44089301P	Lock, Key and Nut Kit	RL001 key code; Optional if same key is to be used for control lock
	70155601	Key	RL001
11	801432	Light	
12	F200116	Water Hose	2 required
13	44069101	Hose Fitting	
14	44064701	Thermistor	2 required
15	36801	Hose Clamp	
16	44073301	Hose	39 inches; Outlet hose
17	36958P	Mixing Valve	
18	801434W	Push-to-Start Switch	2 required
19	44065301	Control Box Base	
20	44068702P	Sensor Harness Assembly	
21	70178701	Snap Bushing	
22	44065901	Bracket	For mounting fire suppression system box to machine

info@zipnasklade.ru
8(800)500-69-51

© Copyright, Alliance Laundry Systems LLC – DO NOT COPY or TRANSMIT

Electromechanical Coin Drop

C, H, P and S Models Except HT075D, ST075D and STF Models and Thermal Oil Models
Models with CD, CX and CY Control Suffixes

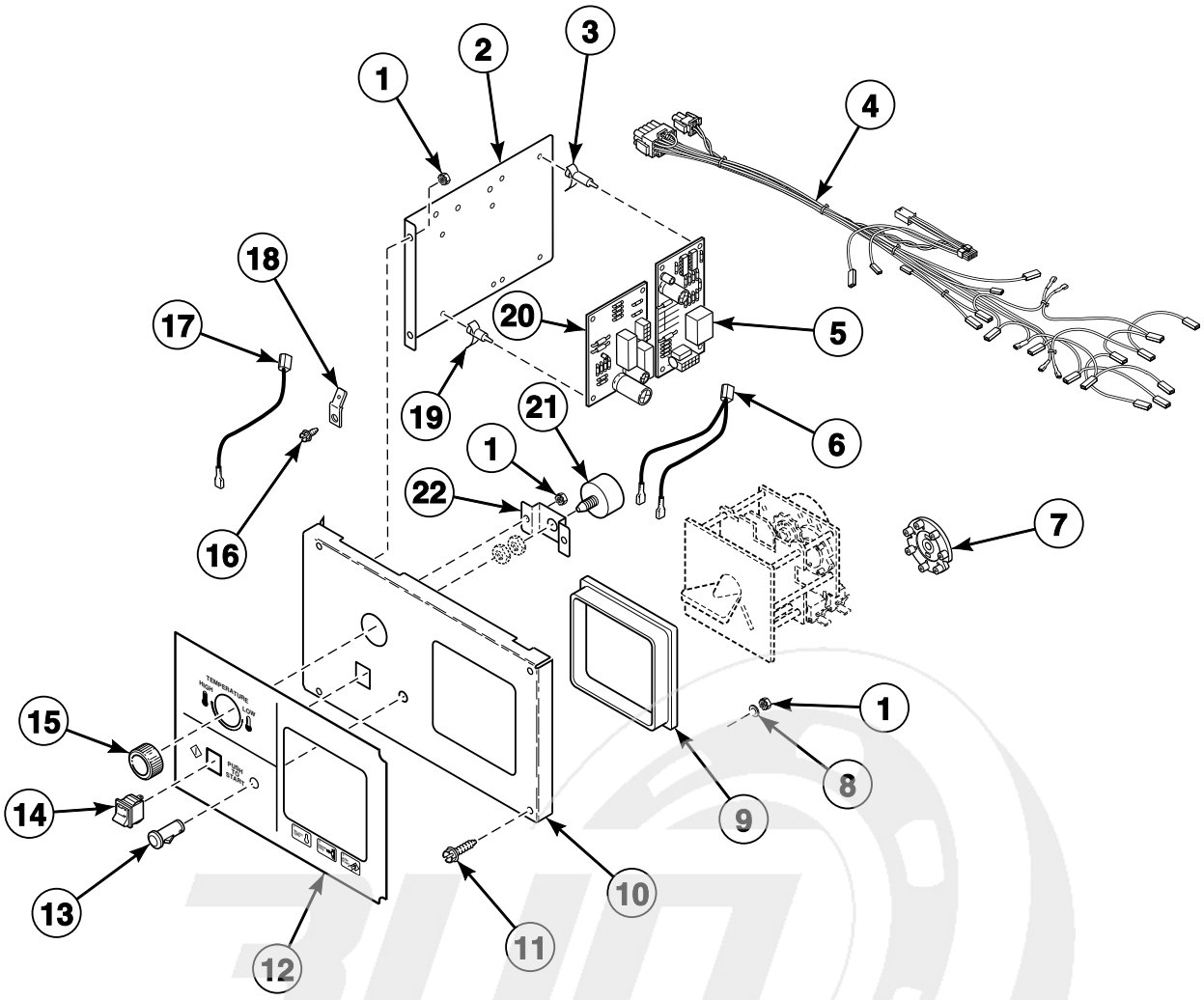

TMB2534P_70409201

info@zipnasklade.ru
8(800)500-69-51

© Copyright, Alliance Laundry Systems LLC – DO NOT COPY or TRANSMIT

Electromechanical Coin Drop

REF	PART NO.	DESCRIPTION	COMMENTS
1	70054	Nut	7 required
2	44018601	Temperature Control Bracket	
3	34896	Circuit Board Support	4 required
4	44005501P	Control Panel Harness	Non-CE models
	44006601	Control Panel Harness	CE electric models
	44025801	Control Panel Harness	CE gas and steam models
5	431347P	Thermostat Module	
6	70084104P	Calibration Jumper	
7	M409532	Cam Package	Timing cams; Includes 9 cams
8	M405535	Washer	3 required
9	70061701	Rotary Drop Shroud	
10	70175804	Control Plate Assembly	
11	70069901	Screw	2 required
12	70113501	Overlay	C and S models; Text and icon
	70131001	Overlay	S models; Icon
	70114301	Overlay	H models; Text and icon
	70134801	Overlay	H models; Icon
	70183501	Overlay	P models; Text and icon
13	70082201	Indicator Light	
14	70108501	Start Switch	
15	44020501	Knob	P and S models; Temperature
	44020502	Knob	H models; Temperature
	44020503	Temperature Knob	C models; Temperature
16	430497	Screw	
17	M412645	Jumper Wire Assembly	Ground wire
18	00177	Male Tab Terminal	
19	70178801	Circuit Board Support	4 required
20	70175301P	Timer Control Assembly	
21	70475001P	Temperature Kit	Potentiometer
22	70080701	Mounting Bracket	

info@zipnasklade.ru
8(800)500-69-51

© Copyright, Alliance Laundry Systems LLC – DO NOT COPY or TRANSMIT

Coin Meter

C, H, P and S Models Except HT075D, ST075D and STF Models and Thermal Oil Models
Models with CD, CX and CY Control Suffixes

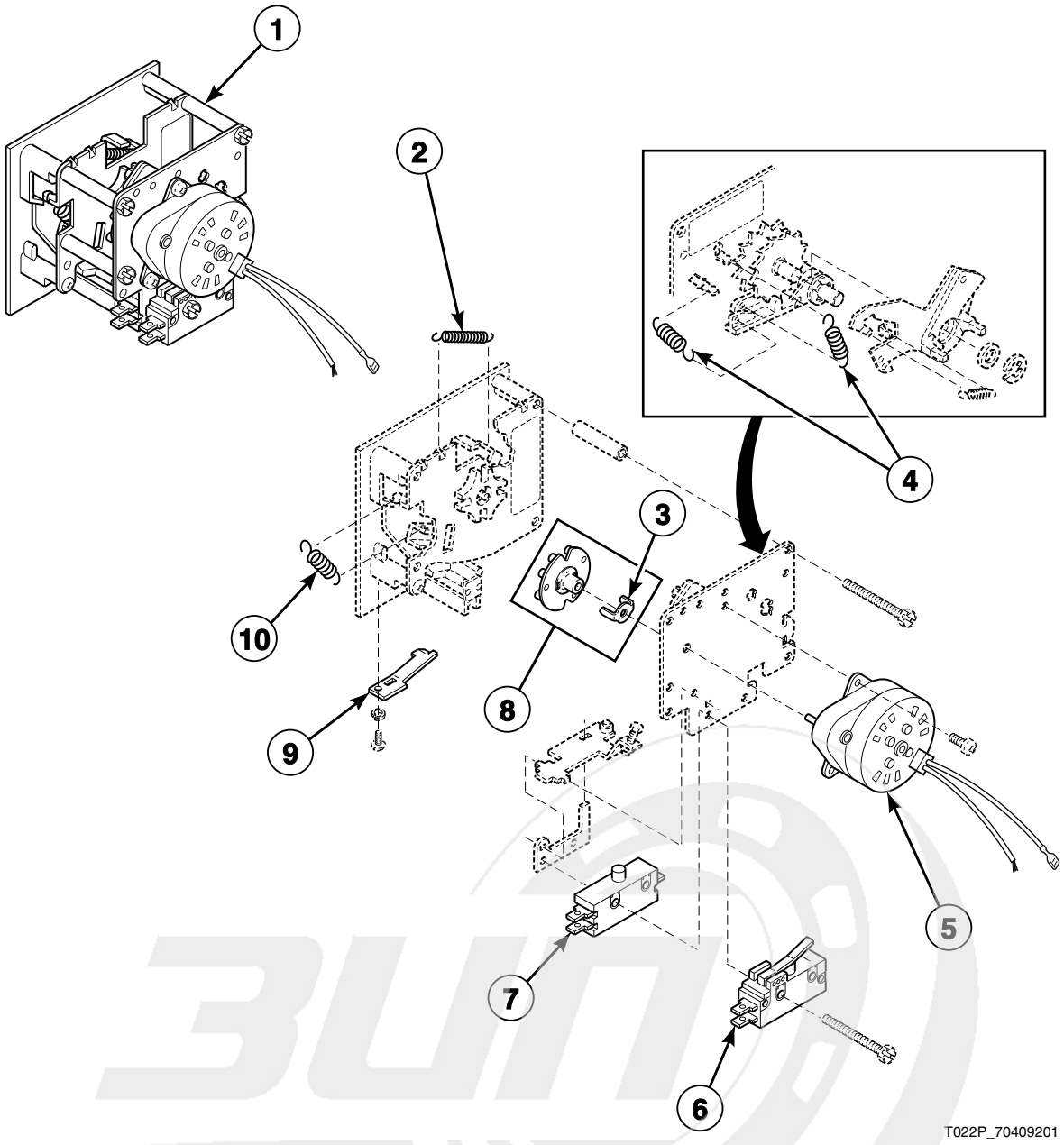

info@zipnasklade.ru
8(800)500-69-51

© Copyright, Alliance Laundry Systems LLC – DO NOT COPY or TRANSMIT

Coin Meter

REF	PART NO.	DESCRIPTION	COMMENTS
1	N/A	Coin Meter	Australia; .20/5 minutes; CD control suffix
	70112501P	Coin Meter	Australia; 1.00/15 minutes; CD control suffix
	70112701P	Coin Meter	USA; .25/10 minutes; 60 Hertz; CD control suffix
	70138401P	Coin Meter	USA; .25/10 minutes; 50 Hertz; CD control suffix
	70137301P	Coin Meter	Standard; 118-1; 60 Hertz; CD control suffix
	70137401P	Coin Meter	Standard; 118-5; 60 Hertz; CD control suffix
	70151301	Coin Meter	South Africa; .20/10 minutes; CD control suffix
	N/A	Coin Meter	England; 20 pence; CD control suffix
	N/A	Coin Meter	Denmark; 1 krone; CD control suffix
	M412546	Coin Meter	Standard; 118-1; 50 Hertz; CD control suffix
	N/A	Coin Meter	Standard; 118-5/10; 50 Hertz; CD control suffix
	70262401	Coin Meter	Euro; .20; CD control suffix
	N/A	Coin Meter	Euro; .50; CD control suffix
2	M405138B	Return Spring	
3	M400754	Coin Meter Drive	
4	M402455	Coil Spring	
5	70218201	Timer Motor	60 Hertz
	70218301	Timer Motor	50 Hertz
6	M400947	Switch	Heat; Switch “B”
7	N/A	Single Throw Switch	Run; Switch “A”
8	M400732P	Timing Cam	10 pin; 6 minute
	M400733P	Timing Cam	12 pin; 5 minute
	M400734P	Timing Cam	2 pin; 30 minute
	M400735P	Timing Cam	3 pin; 20 minute
	M400736P	Timing Cam	4 pin; 15 minute
	M400737P	Timing Cam	5 pin; 12 minute
	M400738P	Timing Cam	6 pin; 10 minute
	M400739P	Timing Cam	7 pin; 8.5 minute
	M400740P	Timing Cam	8 pin; 7.5 minute
	M400741P	Timing Cam	9 pin; 6.6 minute
9	M406297	Coin Retainer Spring	
10	M405138A	Coin Carrier Spring	

N/A = Part no longer available

info@zipnasklade.ru
8(800)500-69-51

© Copyright, Alliance Laundry Systems LLC – DO NOT COPY or TRANSMIT

Single Drop Controls

C, H, I and S Models Except HT075D, ST075D and STF Models
Models with SD and SX Control Suffixes

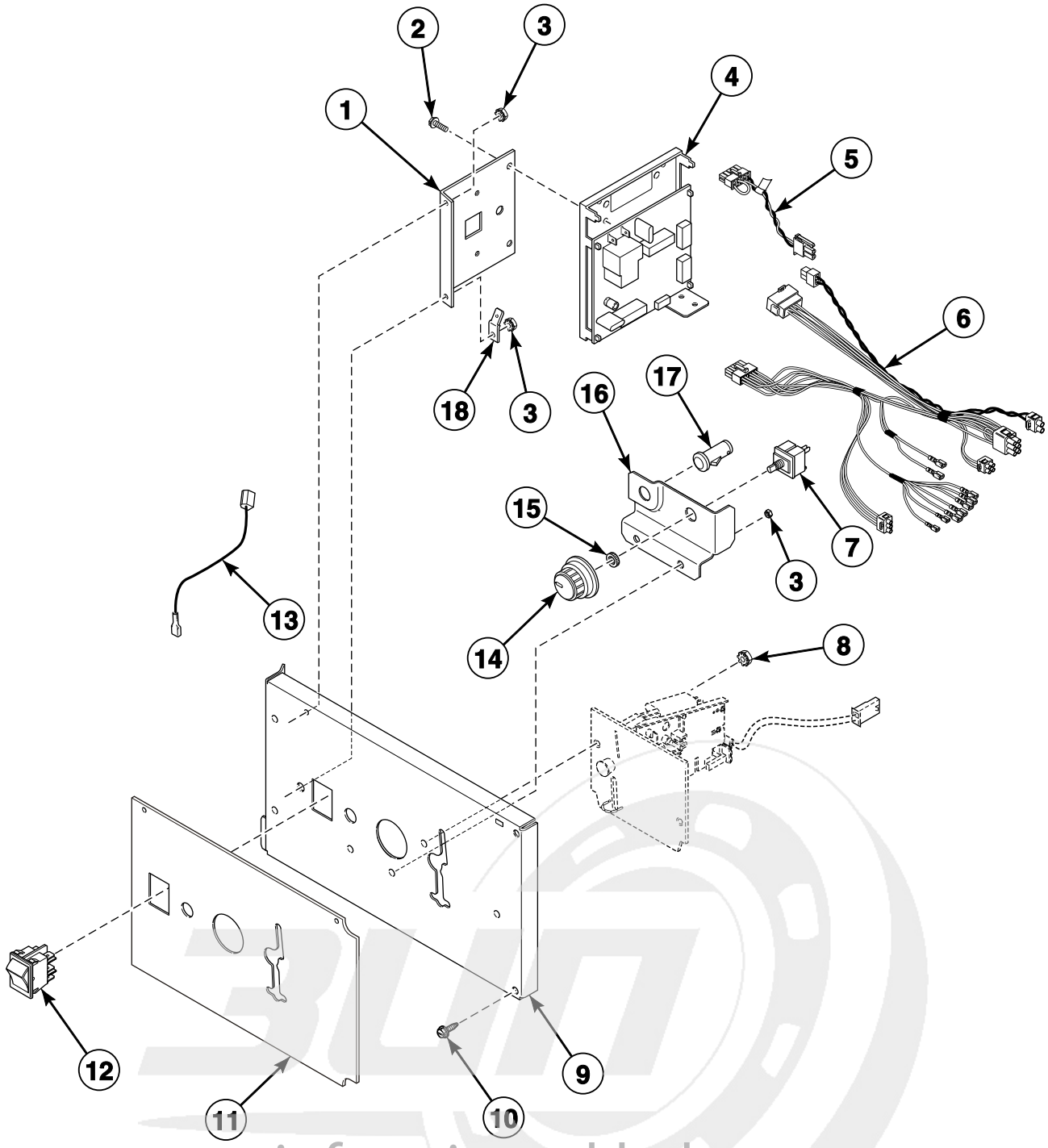

info@zipnasklade.ru
8(800)500-69-51

TMB2391P_70409201

© Copyright, Alliance Laundry Systems LLC – DO NOT COPY or TRANSMIT

Single Drop Controls

REF	PART NO.	DESCRIPTION	COMMENTS
1	70357901	Control Chassis Mounting Bracket	
2	501524	Screw	
3	70054	Nut	
4	513139P	Control Assembly	
5	70324604	Jumper Calibration Wire	
6	44099901P	Control Panel Harness	Non-CE models
	44100201P	Control Panel Harness	CE models
7	511711	Temperature Selector Switch	
8	29786	Nut	
9	70363401	Control Door Assembly	
10	70069901	Screw	
11	70362901	Overlay	C, I and S models
	70363001	Overlay	H models
12	70455101	Rocker Switch	Start switch
13	M412645	Jumper Wire Assembly	
14	44104601	Temperature Knob	
15	24205	Nut	
16	70350201	Temperature Selector Bracket	
17	801431	Light	
18	00177	Male Tab Terminal	

info@zipnasklade.ru
8(800)500-69-51

© Copyright, Alliance Laundry Systems LLC – DO NOT COPY or TRANSMIT

Manual Dual Timer Controls (Drawing 1 of 2)

A, C, D, H, P, S, U and Y Models Except DR80G2-BT075D, HT075D, ST075D, STF, UB and UTF Models;
GT and GU Models Through Serial No. 0110002231
Models with MT and RT Control Suffixes

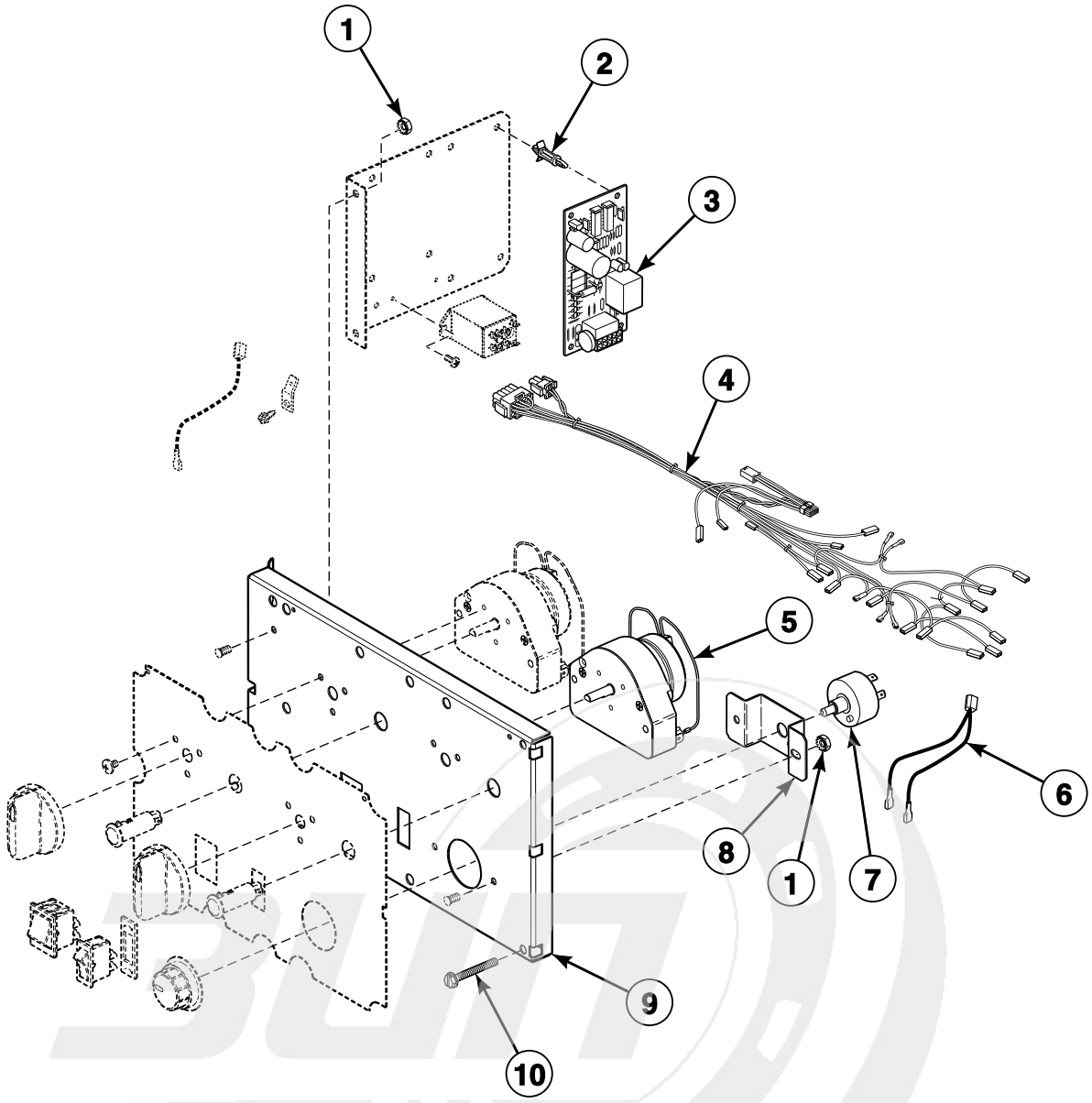

info@zipnasklade.ru
8(800)500-69-51

© Copyright, Alliance Laundry Systems LLC – DO NOT COPY or TRANSMIT

Manual Dual Timer Controls (Drawing 1 of 2)

REF	PART NO.	DESCRIPTION	COMMENTS
	M4799P3	Control Conversion Kit	C and D non-CE electric and gas models with MT control suffix
	44016201P	Control Assembly	
1	70054	Nut	4 required
2	34896	Circuit Board Support	4 required
3	431347P	Thermostat Module	
4	44005601P	Control Panel Harness	Non-CE models; Nonreversing
	44005701P	Control Panel Harness	Non-CE models; Reversing
	44006701	Control Panel Harness	CE electric models; Nonreversing
	44006801	Control Panel Harness	CE electric models; Reversing
	44025601	Control Panel Harness	CE gas and steam models; Nonreversing
	44025701	Control Panel Harness	CE gas and steam models; Reversing
5	70131701P	Timer	Heat; 50 and 60 Hertz
6	70084104P	Calibration Jumper	
7	70475001P	Temperature Kit	Potentiometer; 10-25000 ohms resistance
8	70080701	Mounting Bracket	
9	70175803	Control Plate Assembly	Includes self-clinching studs
10	70069901	Screw	2 required

info@zipnasklade.ru
8(800)500-69-51

© Copyright, Alliance Laundry Systems LLC – DO NOT COPY or TRANSMIT

Manual Dual Timer Controls (Drawing 2 of 2)

A, C, D, H, P, S, U and Y Models Except DR80G2-BT075D, HT075D, ST075D, STF, UB and UTF Models;
GT and GU Models Through Serial No. 0110002231
Models with MT and RT Control Suffixes

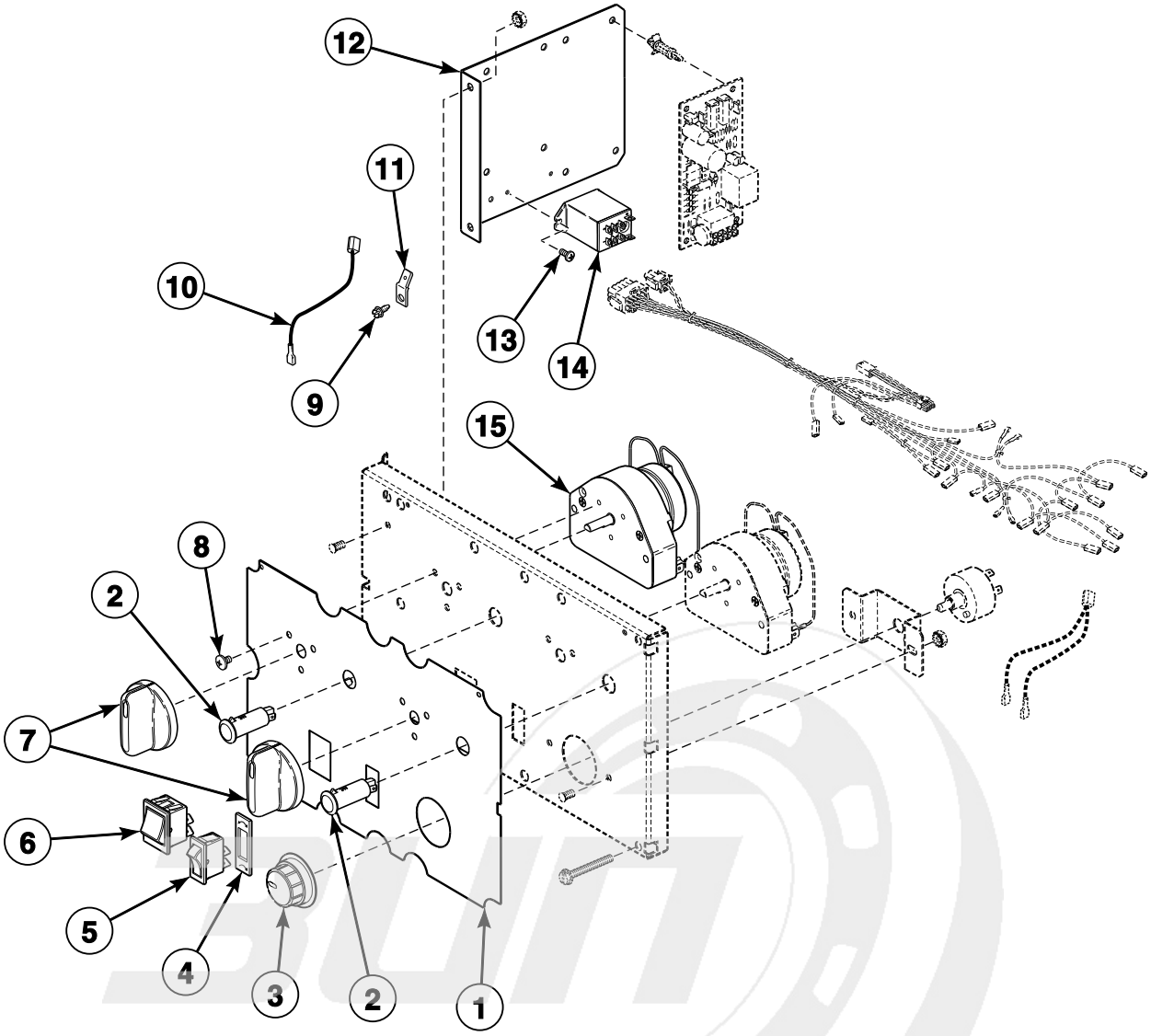

TMB1537P_70409201

info@zipnasklade.ru
8(800)500-69-51

© Copyright, Alliance Laundry Systems LLC – DO NOT COPY or TRANSMIT

Manual Dual Timer Controls (Drawing 2 of 2)

REF	PART NO.	DESCRIPTION	COMMENTS
	44016201P	Control Assembly	
1	70114501	Overlay	A, C, D, S, U and Y models; Nonreversing
	70114502	Overlay	A, C, D, S, U and Y models; Reversing
	N/A	Overlay	G models; Nonreversing
	70129202	Overlay	G models; Reversing
	70245901	Overlay	P models; Nonreversing
	N/A	Overlay	P models; Reversing
	70246001	Overlay	H models; Nonreversing
	N/A	Overlay	H models; Reversing
	70246101	Overlay	H models; Nonreversing; Icon
	N/A	Overlay	H models; Reversing; Icon
	70134901	Overlay	S and U models; Nonreversing; Icon
	N/A	Overlay	S and U models; Reversing; Icon
2	70082201	Indicator Light	
3	44020501	Knob	A, P, S, U and Y models; Temperature
	44020502	Knob	G and H models; Temperature
	44020503	Temperature Knob	C and D models; Temperature
4	M413236	Switch Plate	Reversing
5	M413270	Rocker Switch	Reversing
6	70108501	Start Switch	Push to start
7	70082101	Timer Knob	A, P, S, U and Y models
	M410927	Knob	G and H models
	M400773	Knob	C and D models
8	M411052	Screw	3 required per timer
9	430497	Screw	
10	M412645	Jumper Wire Assembly	Ground wire
11	00177	Male Tab Terminal	
12	44018601	Temperature Control Bracket	
13	M402797	Screw	Non-CE models; 2 required
14	M412534	Relay	Non-CE models
15	70131801P	Timer	Cooling; 60 Hertz; 15 minute
	M412079P	Timer	Cooling; 50 Hertz; 15 minute

N/A = Part no longer available

info@zipnasklade.ru
8(800)500-69-51

© Copyright, Alliance Laundry Systems LLC – DO NOT COPY or TRANSMIT

Dual Digital Timer Controls

C, H, I, S, U and Y Models Except STF, UB and UTF Models
Models with QT and RQ Control Suffixes

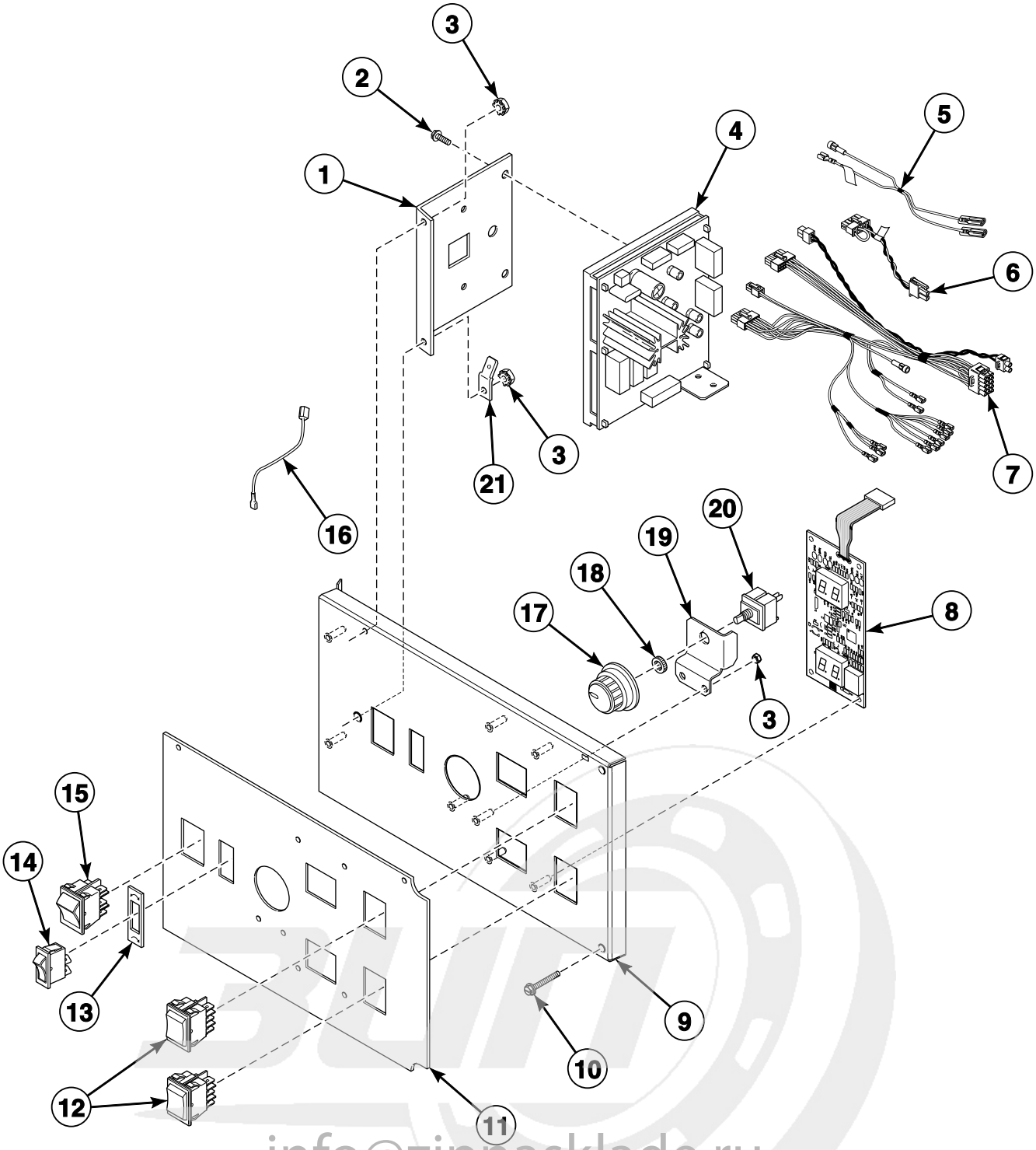

TMB2390P_70409201

info@zipnasklade.ru
8(800)500-69-51

© Copyright, Alliance Laundry Systems LLC – DO NOT COPY or TRANSMIT

Dual Digital Timer Controls

REF	PART NO.	DESCRIPTION	COMMENTS
1	70357901	Control Chassis Mounting Bracket	
2	501524	Screw	
3	70054	Nut	
4	512202P	Control Assembly	
5	44100101P	Control Harness	Reversing; Use in addition to item 7
6	70324605	Jumper Calibration Wire	
7	44100001P	Control Harness	Non-CE models
	44100301P	Control Panel Harness	CE models
8	512218P	Display Assembly	
9	70360601	Control Plate Assembly	
10	70069901	Screw	
11	70362201	Overlay	C, I, S, U and Y models; Nonreversing
	70362202	Overlay	C, I, S, U and Y models; Reversing
	70362501	Overlay	H models; Nonreversing
	70362502	Overlay	H models; Reversing
12	70461301	Rocker Switch	
13	M413236	Switch Plate	Reversing
14	44099601	Rocker Switch	Reversing
15	70455101	Rocker Switch	Start switch
16	M412645	Jumper Wire Assembly	Ground wire
17	44104601	Temperature Knob	
18	24205	Nut	
19	70391701	Temperature Selector Switch Bracket	
20	511711	Temperature Selector Switch	
21	00177	Male Tab Terminal	

info@zipnasklade.ru
8(800)500-69-51

© Copyright, Alliance Laundry Systems LLC – DO NOT COPY or TRANSMIT

DMP Control

C and I Models

Models with DO, DV, DX and RD Control Suffixes

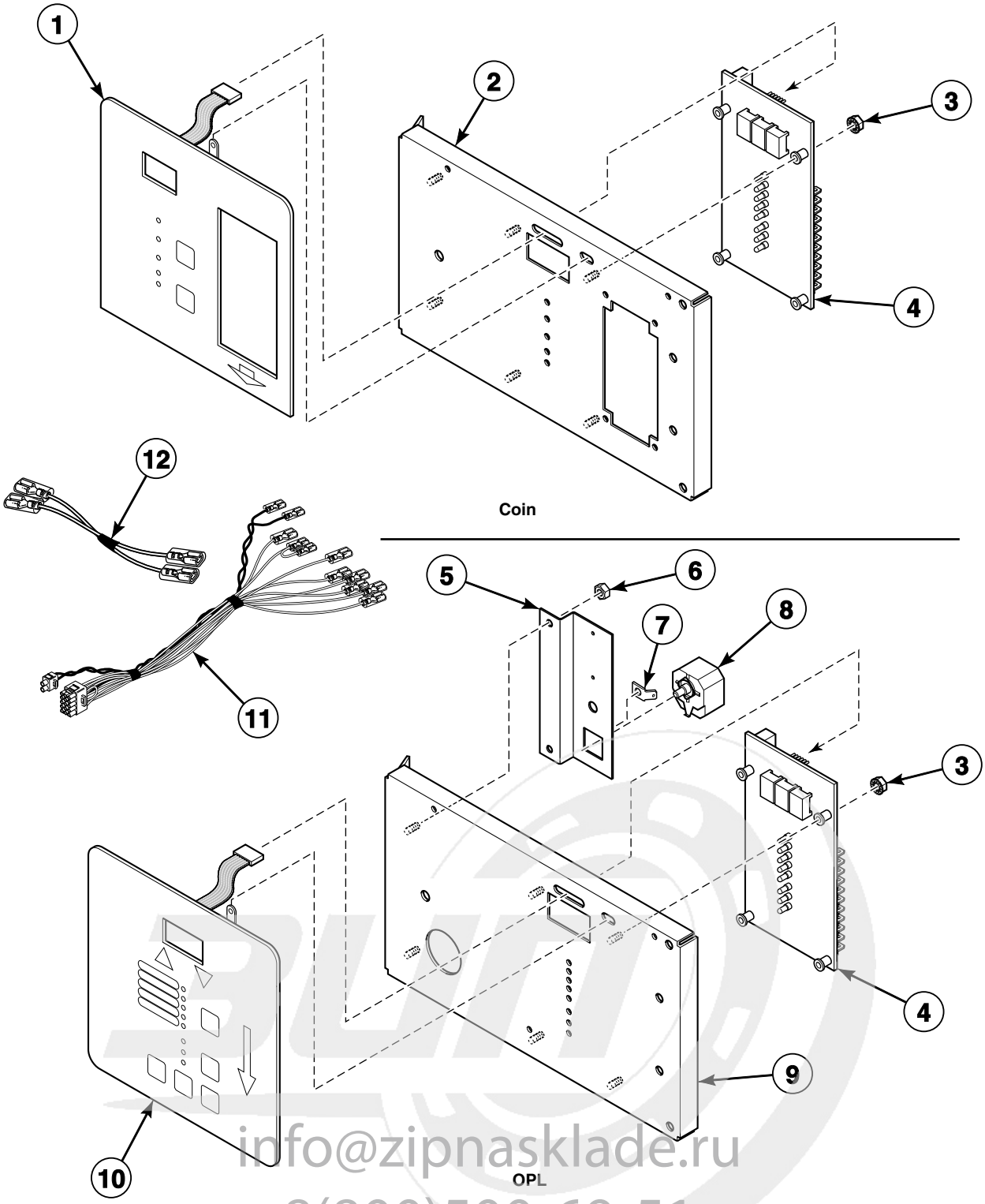

info@zipnasklade.ru
8(800)500-69-51

© Copyright, Alliance Laundry Systems LLC – DO NOT COPY or TRANSMIT

DMP Control

REF	PART NO.	DESCRIPTION	COMMENTS
	M4797P3	Control Conversion Kit	C models; DV and DX control suffixes
1	44039402P	Membrane Switch	Coin
2	44041001	Control Plate Assembly	Coin; Includes studs
3	29787	Nut	
4	44037801P	Electronic Control	
5	44041701	Relay/Buzzer Bracket	
6	70054	Nut	
7	00177	Male Tab Terminal	
8	505447	Adjustable Buzzer	
9	44040901	Control Plate Assembly	OPL; Includes studs
10	44037901P	Membrane Switch	OPL
11	44040301	Control Panel Harness Assembly	Non-CE models; Nonreversing
	44042601	Control Panel Harness	Non-CE models; Reversing
	44043201P	Control Panel Harness	CE models; Coin
12	44042701	Jumper Set Assembly	Coin; Use in addition to 44040301 Control Panel Harness Assembly or 44042601 Control Panel Harness
	44042801	Jumper Set Assembly	OPL; Buzzer; Use in addition to 44040301 Control Panel Harness Assembly or 44042601 Control Panel Harness

info@zipnasklade.ru
8(800)500-69-51

© Copyright, Alliance Laundry Systems LLC – DO NOT COPY or TRANSMIT

DX4 Electronic Control

D and I Models

Models with 3O, 3V, 3X and R3 Control Suffixes

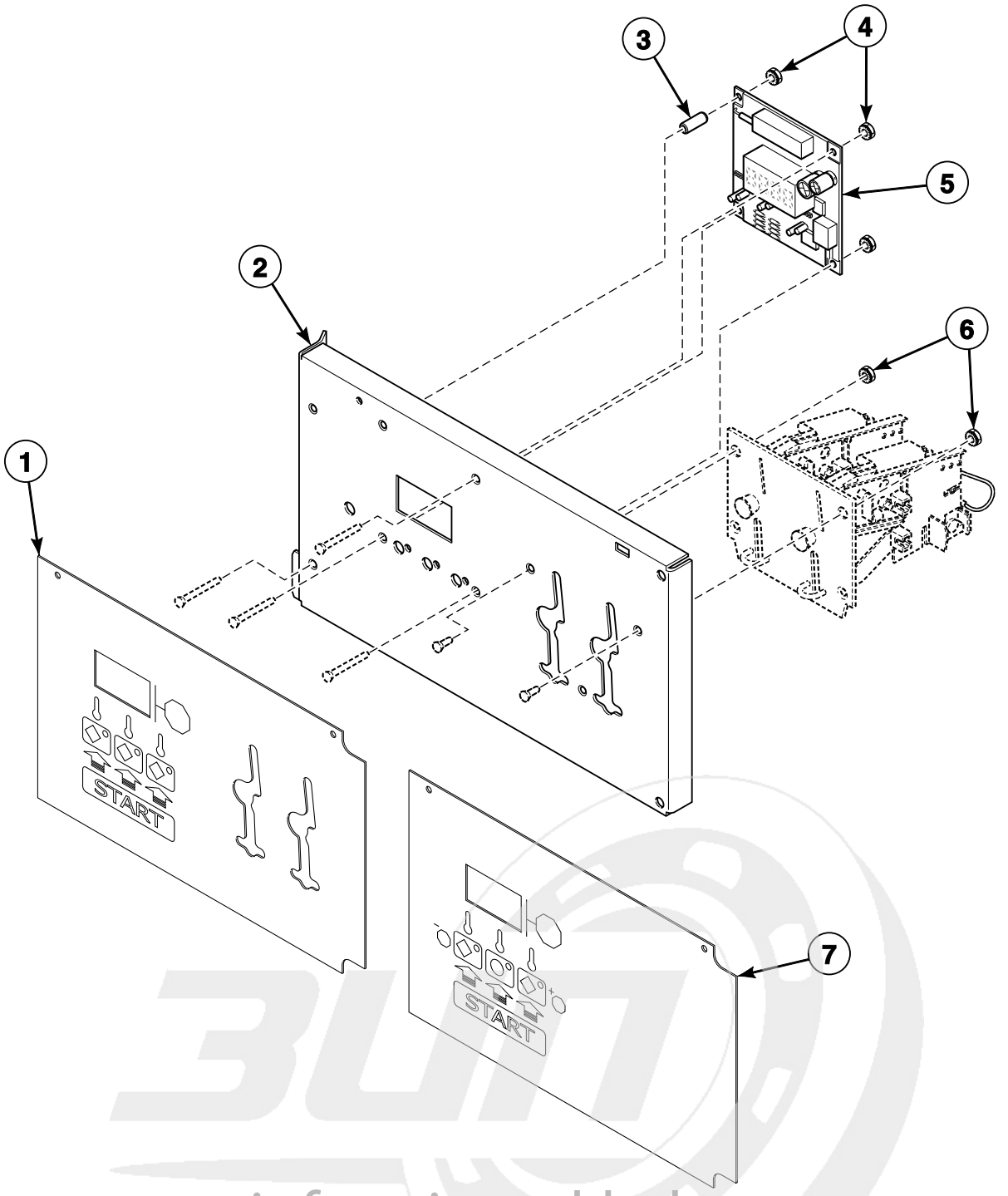

TMB2400P_70409201

info@zipnasklade.ru
8(800)500-69-51

© Copyright, Alliance Laundry Systems LLC – DO NOT COPY or TRANSMIT

DX4 Electronic Control

REF	PART NO.	DESCRIPTION	COMMENTS
	44051401	Control Panel Harness	CE models through 7/10/2005
	N/A	Control Panel Harness	CE models starting 7/11/2005
	44052601	Control Panel Harness	Non-CE models through 7/10/2005
	44098601	Control Panel Harness	Non-CE models starting 7/11/2005
1	44050502	Graphic Overlay	Dual; Coin (shown)
	44050501	Graphic Overlay	Single; Coin
2	44050701P	Control Plate Kit	Includes studs
3	44050601	Sleeve	4 required
4	29787	Nut	
5	70462305P	Control Assembly	3O control suffix
	70462306P	Control Assembly	R3 control suffix
	70462365P	Control Assembly	3V and 3X control suffixes
6	29786	Nut	2 required
7	44050401	Graphic Overlay	OPL

N/A = Part no longer available

info@zipnasklade.ru
8(800)500-69-51

© Copyright, Alliance Laundry Systems LLC – DO NOT COPY or TRANSMIT

OPL Microprocessor Controls

A, G, H, K, L, P, S and U Models
Models with OM and RM Control Suffixes

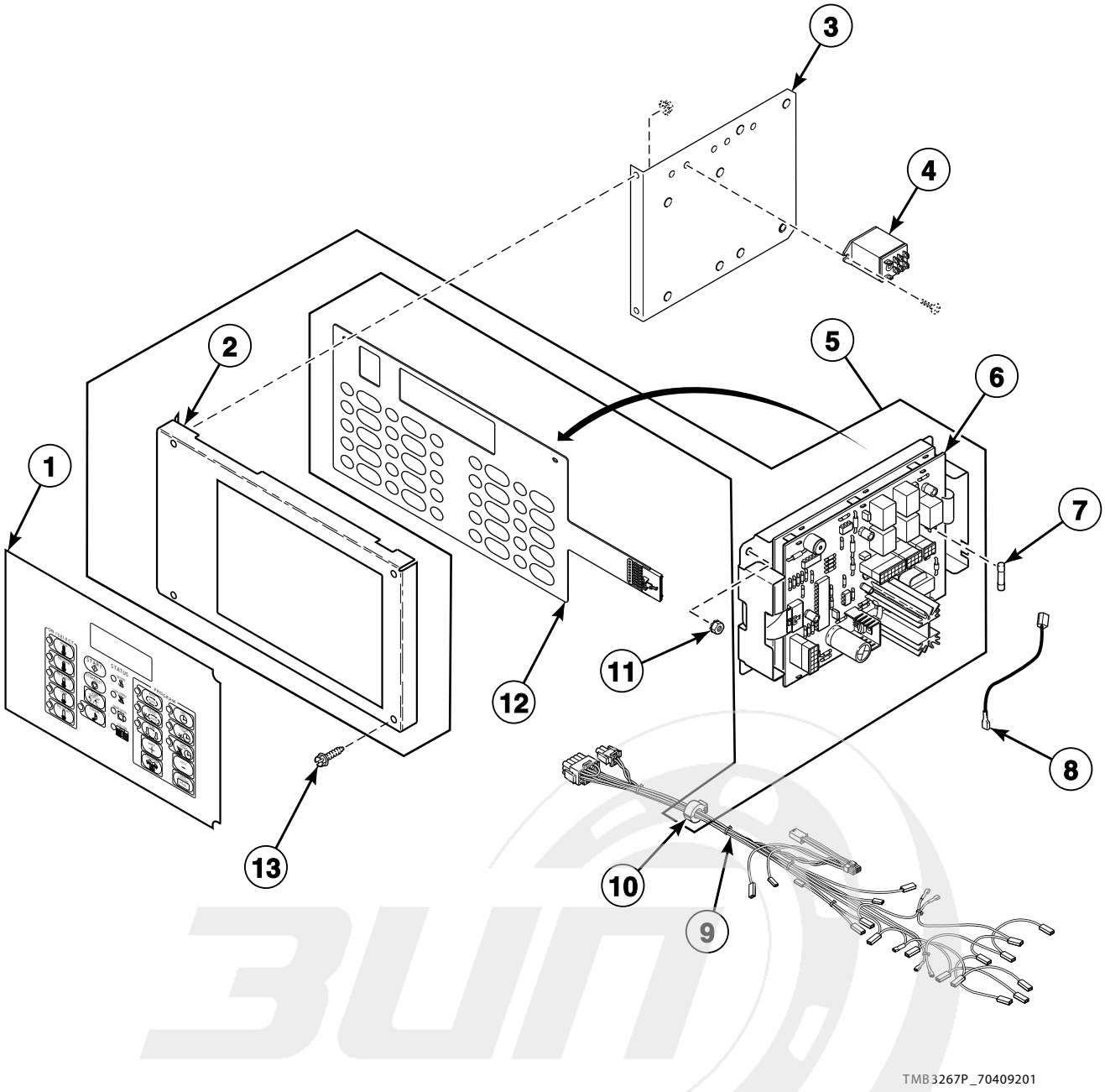

info@zipnasklade.ru
8(800)500-69-51

© Copyright, Alliance Laundry Systems LLC – DO NOT COPY or TRANSMIT

OPL Microprocessor Controls

REF	PART NO.	DESCRIPTION	COMMENTS
1	70115801	Overlay	A, L, S and U models; Nonreversing; Text and icon
	70128401	Overlay	A, L, S and U models; Reversing; Text and icon
	70128701	Overlay	H models; Nonreversing; Text and icon
	70128601	Overlay	H models; Reversing; Text and icon
	70130301	Overlay	P models; Nonreversing; Text and icon
	70135301	Overlay	P models; Reversing; Text and icon
	44130002	Overlay	G models starting Serial No. 0707008006; K models; Nonreversing; Text and icon
	44130001	Overlay	G models starting Serial No. 0707008006; K models; Reversing; Text and icon
	70130401	Overlay	GT and GU models through Serial No. 0110002231; A, S and U models; Nonreversing; Icon
	70130501	Overlay	GT and GU models through Serial No. 0110002231; A, S and U models; Reversing; Icon
	70130601	Overlay	H models; Nonreversing; Icon
	70130701	Overlay	H models; Reversing; Icon
2	70175805	Control Plate Assembly	
3	44018601	Temperature Control Bracket	
4	M412534	Relay	
5	44013601P	Control Assembly	Does not include overlay or control panel harness
6	70228401P	Control Kit	With tape
7	70406501	Fuse	
8	M412645	Jumper Wire Assembly	Ground wire
9	44016701P	Control Panel Harness	Non-CE models; Nonreversing
	44016702	Control Panel Harness	Non-CE models; Reversing
	44017001	Control Panel Harness	CE models; Nonreversing
	44017002	Control Panel Harness	CE models; Reversing
10	M413930P	Ferrite Core Assembly	
11	70054	Nut	4 required
12	M414368P	Membrane Switch	
13	70069901	Screw	2 required

info@zipnasklade.ru
8(800)500-69-51

© Copyright, Alliance Laundry Systems LLC – DO NOT COPY or TRANSMIT

Coin Drop Components for MDC Models

G, H, L, P and S Models Except STF Models
Models with BC, BL and BX Control Suffixes

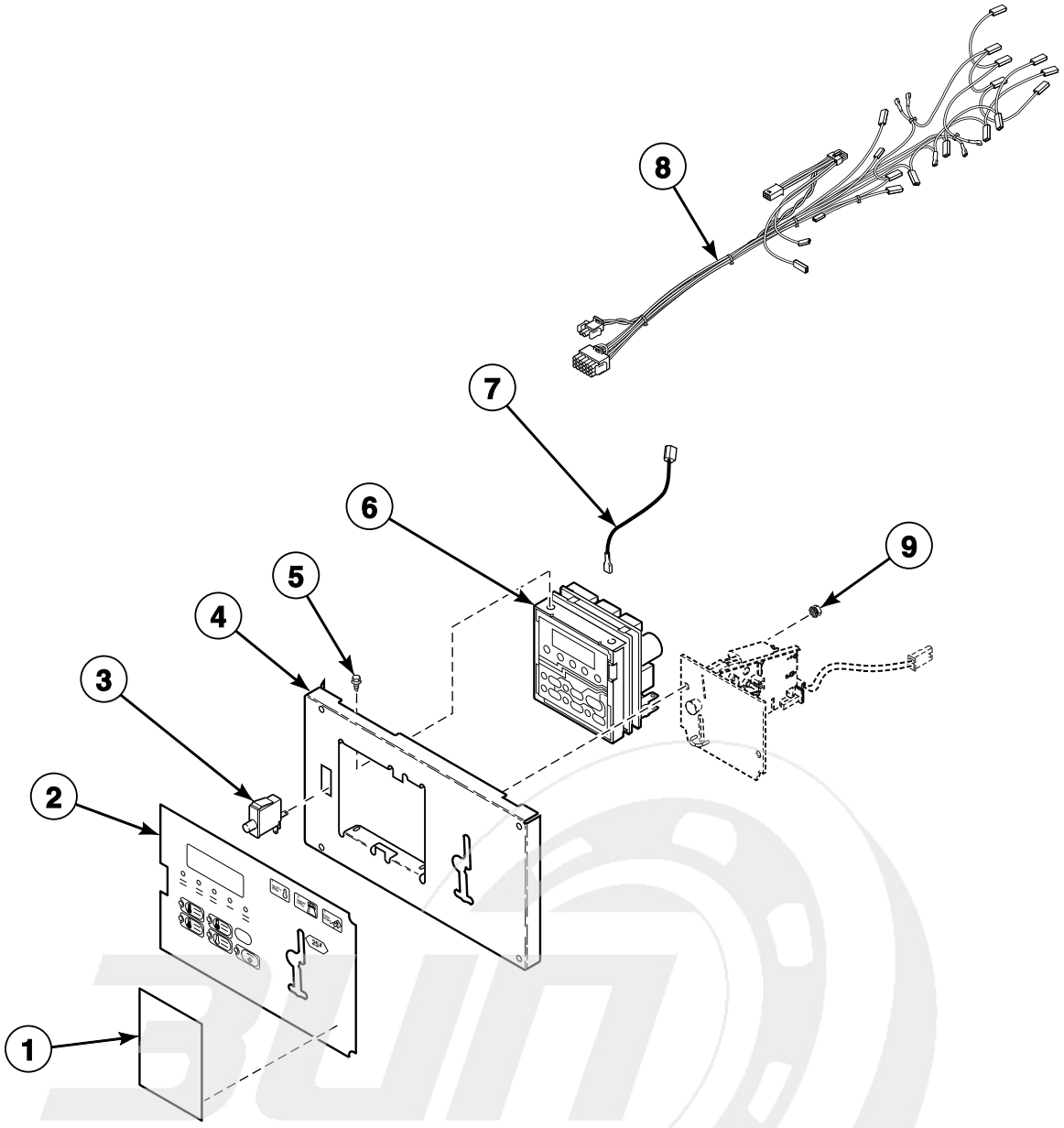

TMB2548P_70409201

info@zipnasklade.ru
8(800)500-69-51

© Copyright, Alliance Laundry Systems LLC – DO NOT COPY or TRANSMIT

Coin Drop Components for MDC Models

REF	PART NO.	DESCRIPTION	COMMENTS
1	39564	Coin Drop Overlay	S models with BL** control suffix; Cover
	70246301	Coin Cover Overlay	L models with BL** control suffix; Cover
	70286701	Overlay	P models with BL** control suffix; Cover
	70275401	Overlay	H models with BL** control suffix; Cover
2	70257701	Overlay	L and S models with BC, BL** and BX control suffixes; Text; Single drop
	70129501	Overlay	P models with BC* and BX* control suffixes; Single drop
	70129601	Overlay	P models with BC* and BX* control suffixes; Dual drop
	70321001	Overlay	P models with BC* and BX* control suffixes; World drop
	70259001	Overlay	P models with BC* and BX* control suffixes
	70261001	Overlay	L and S models with BC, BL** and BX control suffixes; Icon; Single drop
	70257702	Overlay	L and S models with BC and BX control suffixes; Dual drop
	70261002	Overlay	L and S models with BC and BX control suffixes; Dual drop
	70411701	Overlay	G models with BC and BX control suffixes; Text; Single drop
	70411702	Overlay	G models with BC and BX control suffixes; Text; Dual drop
	70258001	Overlay	H models with BC, BL** and BX control suffixes; Text; Single drop
	70261201	Overlay	H models with BC, BL** and BX control suffixes; Icon; Single drop
	70258002	Overlay	H models with BC and BX control suffixes; Dual drop
	70261202	Overlay	H models with BC and BX control suffixes; Icon; Dual drop
3	70413301	Pushbutton Switch	
4	70291001P	Control Plate Kit	
5	501524	Screw	4 required for mounting control
6	511867P	Control Assembly	
7	M412645	Jumper Wire Assembly	Ground wire
8	44010801P	Control Panel Harness	Non-CE models
	44010901	Control Panel Harness	CE models
9	29786	Nut	3 required

*** NOTE: P models with BC or BX control suffixes require an overlay and coin drop overlay.**

**** NOTE: BL control suffix requires an overlay and overlay cover specific to model.**

info@zipnasklade.ru
8(800)500-69-51

© Copyright, Alliance Laundry Systems LLC – DO NOT COPY or TRANSMIT

Central Pay and Card Reader MDC Models

G, H, K, L, N, P and S Models Except STF Models
Models with BG, BL, BU and BY Control Suffixes

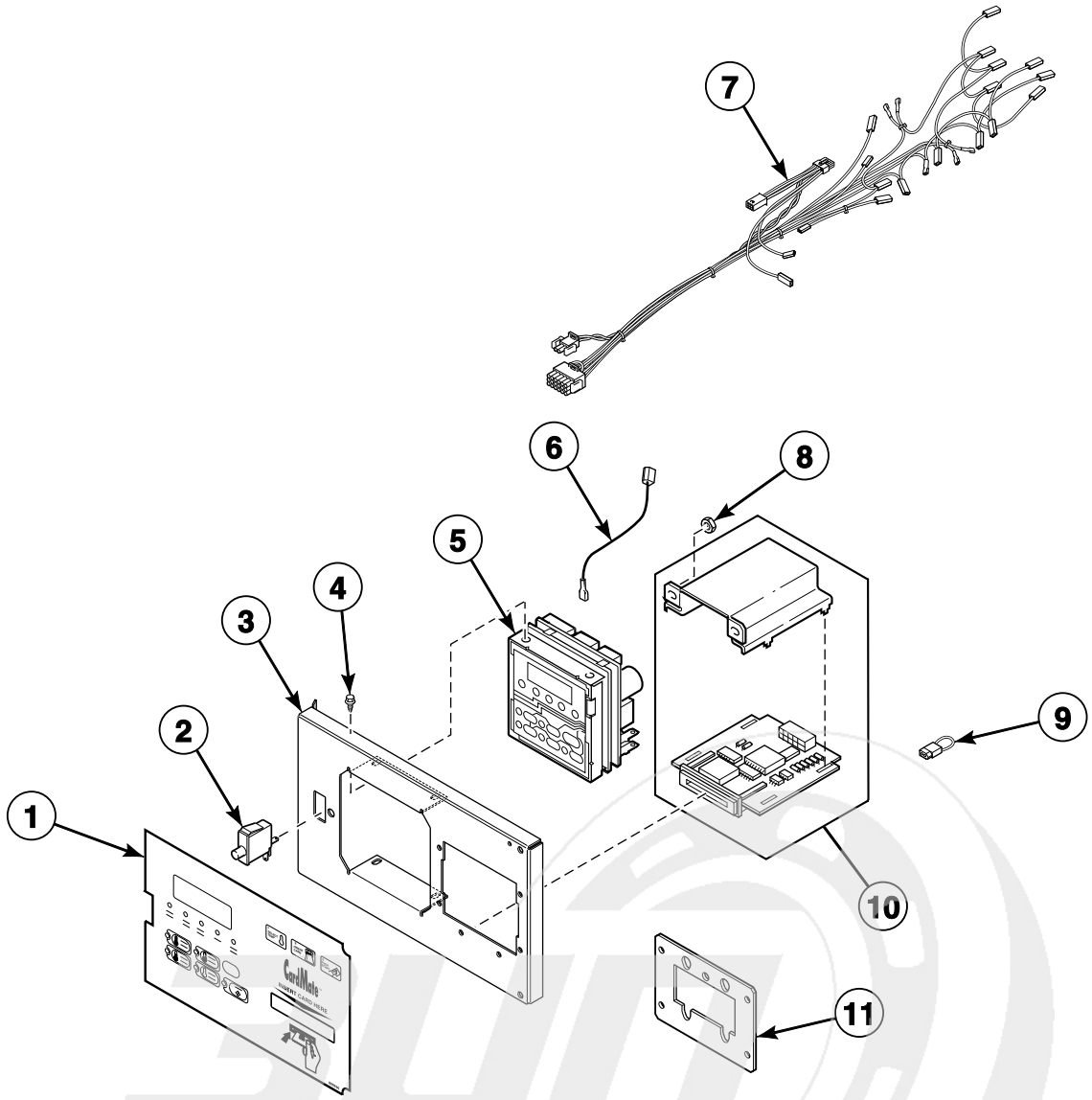

TMB2456P_70409201

info@zipnasklade.ru
8(800)500-69-51

© Copyright, Alliance Laundry Systems LLC – DO NOT COPY or TRANSMIT

Central Pay and Card Reader MDC Models

REF	PART NO.	DESCRIPTION	COMMENTS
1	70266701	Overlay	L and S models with BY control suffix; Text
	N/A	Overlay	L and S models with BY control suffix; Icon
	70257703	Overlay	L and S models except model ST075D with BY control suffix; Text
	70261003	Overlay	L and S models except model ST075D with BY control suffix; Icon
	70259001	Overlay	P models with BL* control suffix
	70266801	Overlay	H models with BY control suffix; Text
	70258003	Overlay	H models except model HT075D with BU control suffix; Text
	70411703	Overlay	G and K models with BG control suffix; Text
2	70413301	Pushbutton Switch	
3	N/A	Control Plate Assembly	BY control suffix
	70348801	Control Plate Assembly	H, N, P and S models except models HT075D and ST075D with BU control suffix
	70291001P	Control Plate Kit	H, L, P and S models with BL control suffix
4	501524	Screw	
5	511867P	Control Assembly	
6	M412645	Jumper Wire Assembly	Ground wire
7	44010801P	Control Panel Harness	Non-CE models
	44010901	Control Panel Harness	CE models
8	70054	Nut	
9	N/A	Bypass Jumper Wire	
10	510068P	Card Reader and Bracket Assembly	
11	70208801	Mounting Plate	H, N, P and S models except models HT075D and ST075D with BU control suffix

N/A = Part no longer available

*** NOTE: BL control suffix requires an overlay and overlay cover specific to model.**

info@zipnasklade.ru
8(800)500-69-51

© Copyright, Alliance Laundry Systems LLC – DO NOT COPY or TRANSMIT

Optional Card Reader Mountings for MDC Models

H, L, N, P and S Models Starting Serial No. 0408000120 Except STF Models
Models with BY Control Suffix

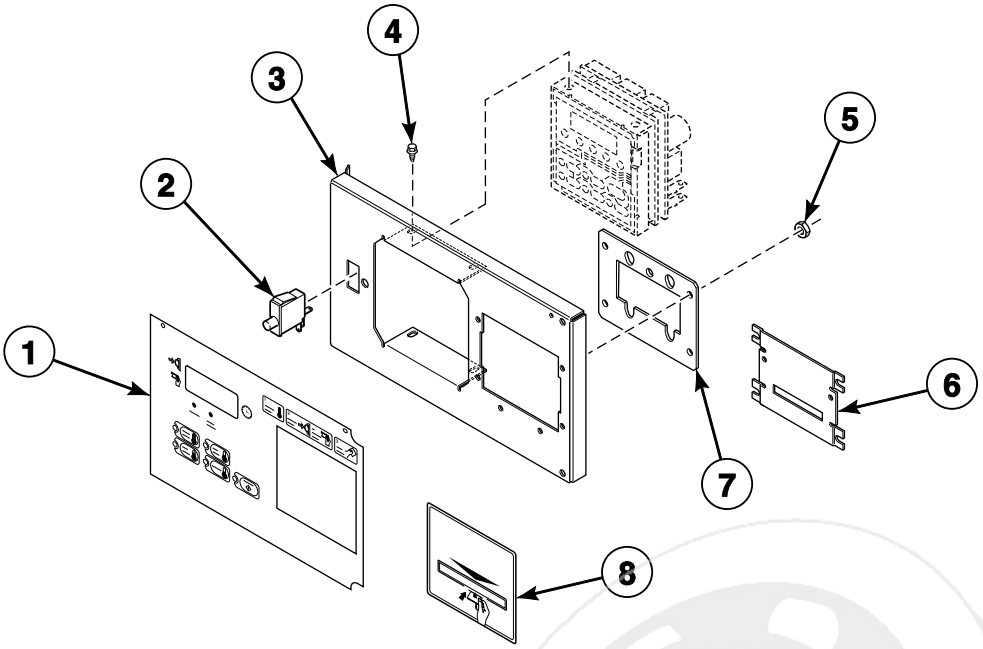

TMB1827B_70409201

info@zipnasklade.ru
8(800)500-69-51

© Copyright, Alliance Laundry Systems LLC – DO NOT COPY or TRANSMIT

Optional Card Reader Mountings for MDC Models

REF	PART NO.	DESCRIPTION	COMMENTS
1	70257703	Overlay	S models; Text and icon
	70258003	Overlay	H models; Text and icon
	70304401	Overlay	N models; Text and icon
2	70413301	Pushbutton Switch	
3	70348801	Control Plate Assembly	
4	501524	Screw	4 required
5	70054	Nut	4 required
6	44089501	Slot Card Plate Assembly	Included in literature packet
7	70208801	Mounting Plate	
8	70334201	Card Reader Overlay	Black; Included in literature packet
	70334301	Card Reader Overlay	Gray; Included in literature packet

info@zipnasklade.ru
8(800)500-69-51

© Copyright, Alliance Laundry Systems LLC – DO NOT COPY or TRANSMIT

Coin Drops

All Models Except U Models with All Control Suffixes Except CD, CX and CY

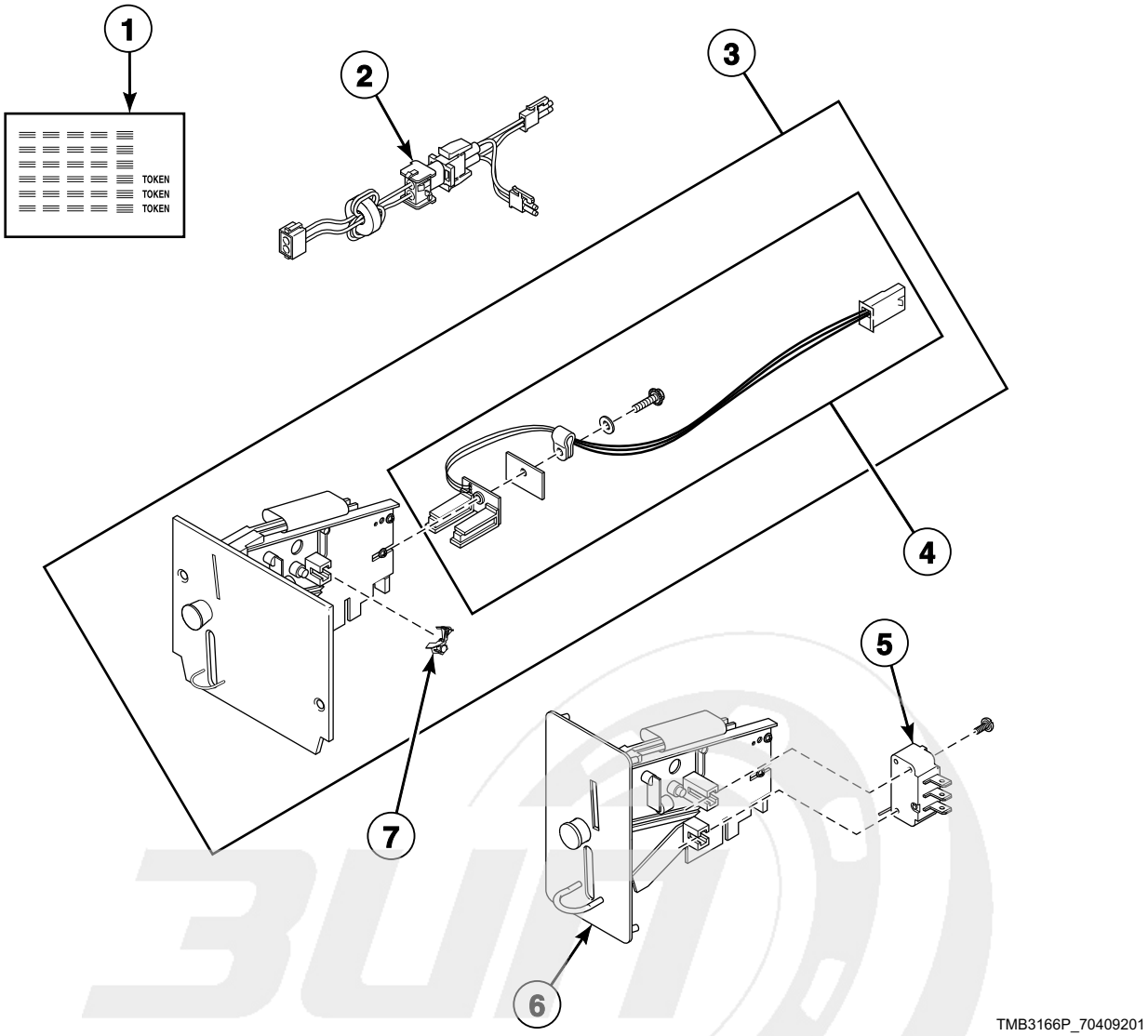

info@zipnasklade.ru
8(800)500-69-51

© Copyright, Alliance Laundry Systems LLC – DO NOT COPY or TRANSMIT

Coin Drops

REF	PART NO.	DESCRIPTION	COMMENTS
1	38725	Coin Identification Paper	
2	44065801	Electronic Coin Drop Harness	Included in CK502 Electronic Coin Drop Kit
3	70294103P	Electronic Coin Drop Assembly	United Kingdom (default) and Europe
	70294104	Electronic Coin Drop Assembly	Euro (default), Denmark and Norway
	70294105P	Electronic Coin Drop Assembly	Australian (default), New Zealand, Hong Kong, South Korea and Malaysia
	70294106	Electronic Coin Drop Assembly	Mexico (default), Ecuador and USA dollar
	70294116	Electronic Coin Drop Assembly	Malaysia (default), China, Russia and Singapore
	70294107	Electronic Coin Drop Assembly	Lithuania (default), Latvia and Europe
	70441601P	Coin Drop	USA; $.25; Single
	70256402P	Coin Drop	USA; $.25 and $1.00; Dual
	70429001	Coin Drop	D models; USA
	38475	Coin Drop Assembly	Japan; 100 yen
	38519	Coin Drop Assembly	Japan; 100 and 500 yen
	38467	Coin Drop Assembly	Australia; .20 and 1.00
	39748	Coin Drop	Token; Jeton; CE models
	210195	Coin Drop Assembly	Euro; .20 and 1.00
	210196	Coin Drop Assembly	Euro; .50 and 1.00
	70283102	Coin Drop Assembly	Euro; .20 and .50
	70294111	Electronic Coin Drop Assembly	Euro; .10, .20, .50, 1.00 and 2.00
	38462P	Coin Drop Assembly	Token; 118-1
	38463	Coin Drop Assembly	Token; 118-5
	38464P	Coin Drop Assembly	Canada; .25
	70441602	Coin Drop Assembly	Canada; .25 and 1.00
	38472	Coin Drop Assembly	England; 20 pence and 1 pound
	38521	Coin Drop Assembly	Korea; 100 and 500 won
	N/A	Coin Drop Assembly	New Zealand; .20 and 1.00
	38963P	Coin Drop	Token; 118-16
	39157	Coin Drop Assembly	Israel; Shekel
	CK077	Coin Drop Kit	Taiwan; 10 NT
	70281102	Coin Drop Assembly	Taiwan; Dual drop
4	200674P	Opto Coupler	
5	CM1100P	Coin Drop Switch	C, D and I models
6	44039701P	Coin Drop Assembly	USA; $.25; DO, DV, DX and RD control suffixes
	44039702	Coin Drop Assembly	Mexico; 2 peso; DO, DV, DX and RD control suffixes
	44039703	Coin Drop Assembly	Token; .880; DO, DV, DX and RD control suffixes
	44039704	Coin Drop Assembly	Japan; 100 yen; DO, DV, DX and RD control suffixes
	44039705	Coin Drop Assembly	England; 20 pence; DO, DV, DX and RD control suffixes
	44039706	Coin Drop Assembly	Token; .800; DO, DV, DX and RD control suffixes
	44039707	Coin Drop Assembly	England; 50 pence; DO, DV, DX and RD control suffixes
7	201595P	Wire Guard	

N/A = Part no longer available

info@zipnasklade.ru
8(800)500-69-51

© Copyright, Alliance Laundry Systems LLC – DO NOT COPY or TRANSMIT

Coin Drop Kits

All Models Except U Models with All Control Suffixes Except CD, CX and CY

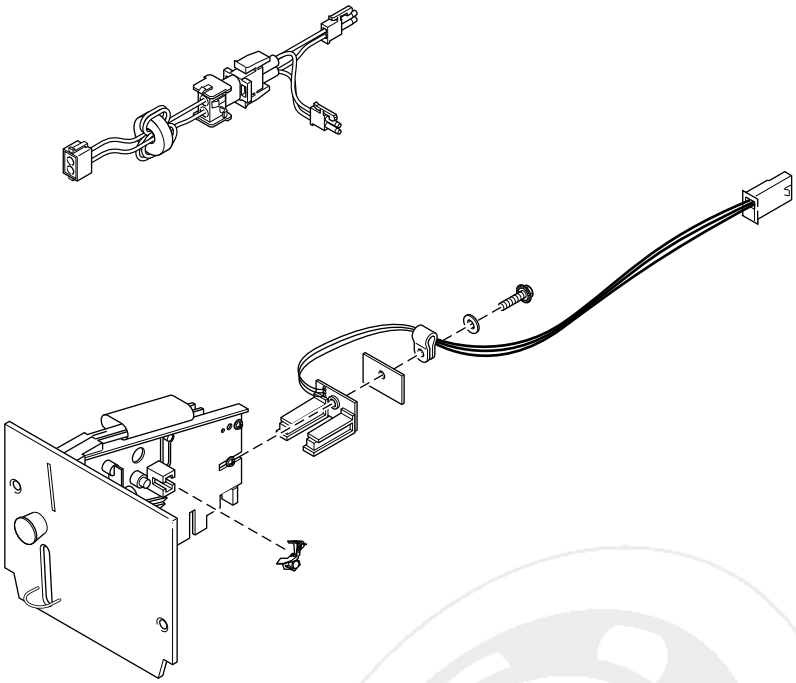

TMB2738PA_70409201

info@zipnasklade.ru
8(800)500-69-51

© Copyright, Alliance Laundry Systems LLC – DO NOT COPY or TRANSMIT

Coin Drop Kits

REF	PART NO.	DESCRIPTION	COMMENTS
	CK502	Electronic Coin Drop Kit	Includes 44065801 Electronic Coin Drop Harness and wiring diagram supplement
	CK115	Electronic Coin Drop Kit	USA and Canada; In addition to this kit, order CK502 Electronic Coin Drop Kit
	CK099	Electronic Coin Drop Kit	Australia (default), New Zealand, Hong Kong, South Korea and Malaysia; In addition to this kit, order CK502 Electronic Coin Drop Kit
	CK100	Electronic Coin Drop Kit	United Kingdom (default) and Europe; In addition to this kit, order CK502 Electronic Coin Drop Kit
	CK101	Electronic Coin Drop Kit	Euro (default), Denmark and Norway; In addition to this kit, order CK502 Electronic Coin Drop Kit
	CK103	Electronic Coin Drop Kit	Lithuania (default), Latvia and Europe; In addition to this kit, order CK502 Electronic Coin Drop Kit
	CK108	Electronic Coin Drop Kit	South Africa; In addition to this kit, order CK502 Electronic Coin Drop Kit
	CK109	Electronic Coin Drop Kit	Euro; In addition to this kit, order CK502 Electronic Coin Drop Kit
	CK113	Electronic Coin Drop Kit	Japan and Taiwan; In addition to this kit, order CK502 Electronic Coin Drop Kit
	CK116	Electronic Coin Drop Kit	Malaysia (default), China and Singapore; In addition to this kit, order CK502 Electronic Coin Drop Kit
	CK117	Electronic Coin Drop Kit	Russia; In addition to this kit, order CK502 Electronic Coin Drop Kit
	CK118	Electronic Coin Drop Kit	Philippine; In addition to this kit, order CK502 Electronic Coin Drop Kit

info@zipnasklade.ru
8(800)500-69-51

© Copyright, Alliance Laundry Systems LLC – DO NOT COPY or TRANSMIT

Coin Drop Components for NetMaster Models

H, K, L, P and S Models Except HT075D, ST075D and STF Models
Models with NC, NX, ZC and ZX Control Suffixes

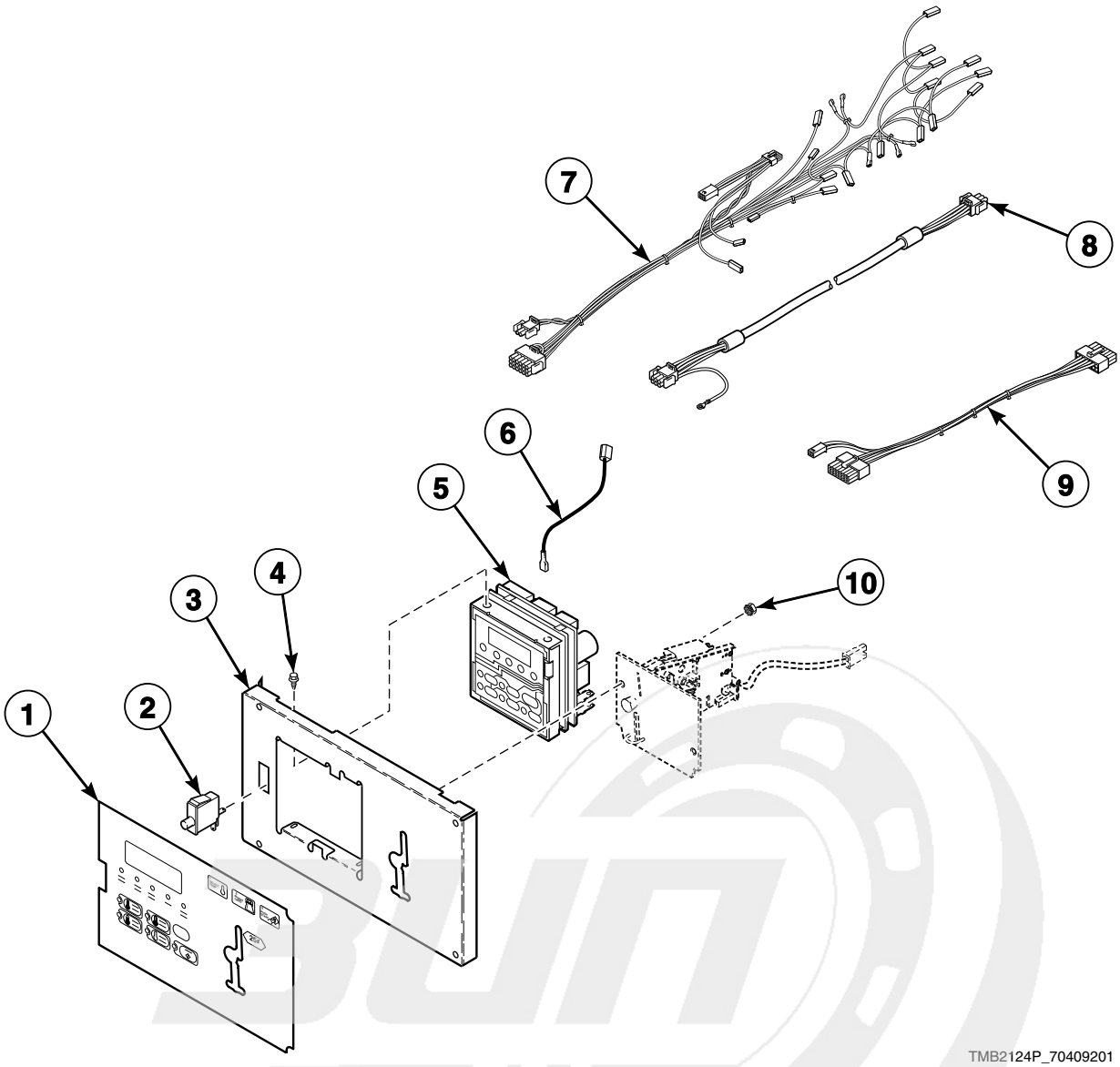

info@zipnasklade.ru
8(800)500-69-51

© Copyright, Alliance Laundry Systems LLC – DO NOT COPY or TRANSMIT

Coin Drop Components for NetMaster Models

REF	PART NO.	DESCRIPTION	COMMENTS
	70291001P	Control Plate Kit	Includes items 3, 10 and 70292801 Washer
1	70184301	Overlay	S models; Single drop
	70184302	Overlay	S models; Dual drop
	70239601	Overlay	H models; Single drop
	70239602	Overlay	H models; Dual drop
	70129501	Overlay	P models; Single drop
	44144301	Overlay	K models; NC and NX control suffixes; Single drop
	44144302	Overlay	K models; NC and NX control suffixes; Dual drop
	44147801	Overlay	K models; Coin
2	70413301	Pushbutton Switch	
3	70419701	Control Plate Assembly	K models; NC and NX control suffixes
	70175807	Control Plate Assembly	All other models
4	501524	Screw	4 required for mounting control
5	505905P	Control Kit	
6	M412645	Jumper Wire Assembly	Ground wire
7	44010801P	Control Panel Harness	H, K, P and S non-CE models
	44010901	Control Panel Harness	H, K, P and S CE models
8	M414875P	Communication Cable	Models HT075L, HT075N, SA075L, SA075N, ST075E, ST075L, ST075N, ST075S and ST075T; ZC and ZX control suffixes
9	800217	Network Wire Harness Assembly	Models HT075L, HT075N, SA075L, SA075N, ST075E, ST075L, ST075N, ST075S and ST075T; ZC and ZX control suffixes
10	29786	Nut	2 required

info@zipnasklade.ru
8(800)500-69-51

© Copyright, Alliance Laundry Systems LLC – DO NOT COPY or TRANSMIT

Card Reader NetMaster Models

H, K, L, P and S Models Except HT075D, ST075D and STF Models
Models with NR, NY, ZR and ZY Control Suffixes

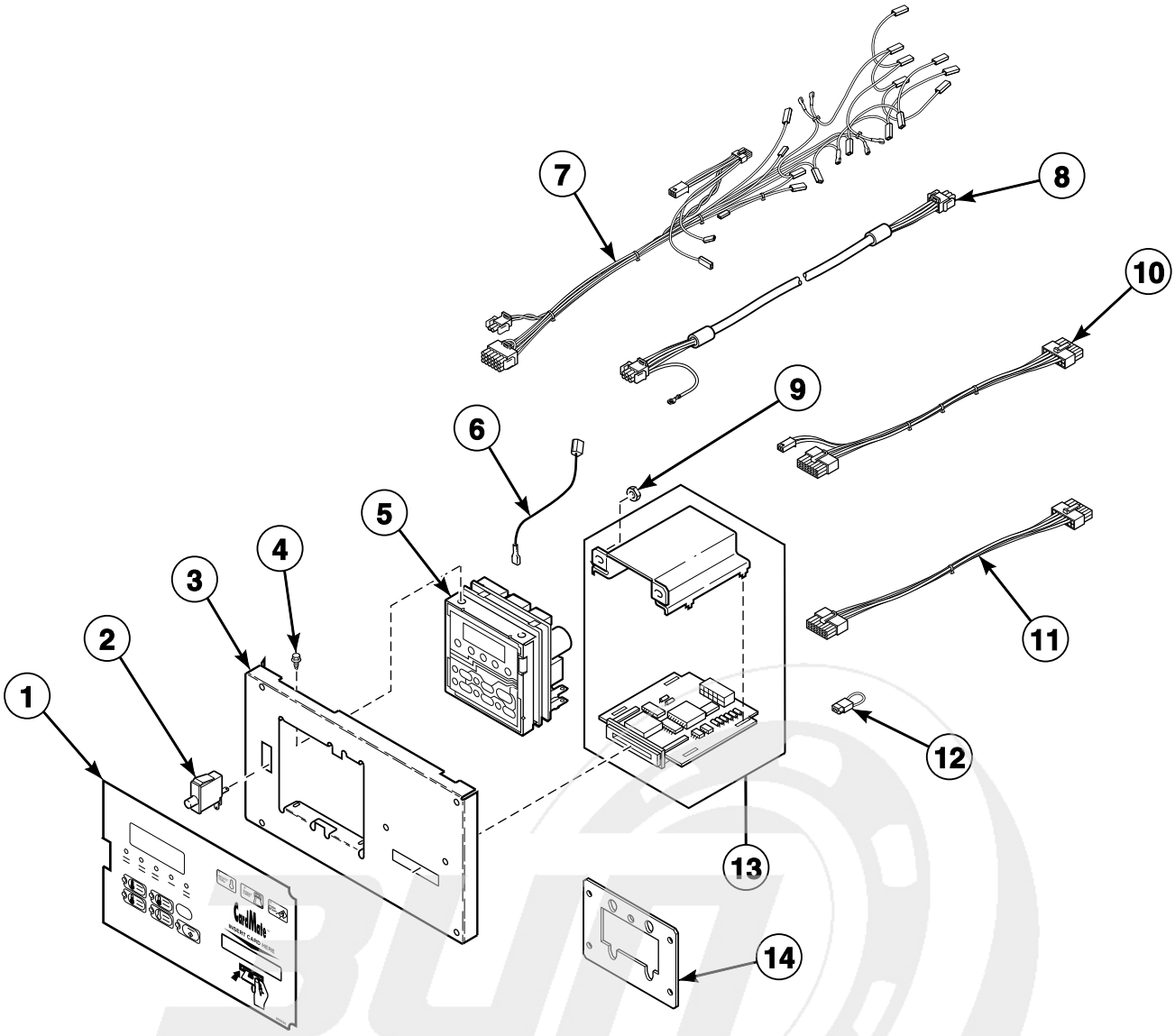

TMB1368P_70409201

info@zipnasklade.ru
8(800)500-69-51

© Copyright, Alliance Laundry Systems LLC – DO NOT COPY or TRANSMIT

Card Reader NetMaster Models

REF	PART NO.	DESCRIPTION	COMMENTS
1	N/A	Overlay	ST and SU models; NY control suffix
	70184401	Overlay	S models; NR and ZR control suffixes
	N/A	Overlay	H models; NR and ZR control suffixes
	N/A	Overlay	HT and HU models; NY control suffix
	44149301	Overlay	K models; NY control suffix
2	70413301	Pushbutton Switch	
3	N/A	Control Plate Assembly	NR and ZR control suffixes
	70348801	Control Plate Assembly	Non-Australian models; NY control suffix
4	501524	Screw	4 required
5	505905P	Control Kit	Includes tape
6	M412645	Jumper Wire Assembly	Ground wire
7	44010801P	Control Panel Harness	H, K, L, P and S non-CE models
	44010901	Control Panel Harness	H, K, P and S CE models
8	M414875P	Communication Cable	Models HT075L, HT075N, SA075L, SA075N, ST075E, ST075L, ST075N, ST075S and ST075T; ZR control suffix
9	70054	Nut	2 required for models with NR and ZR control suffixes; 4 required for non-Australian models with NY control suffix
10	800217	Network Wire Harness Assembly	Models HT075L, HT075N, SA075L, SA075N, ST075E, ST075L, ST075N, ST075S and ST075T; ZR control suffix
11	70206601	Card Reader Network Harness Assembly	Models HT075L, HT075N, SA075L, SA075N, ST075E, ST075L, ST075N, ST075S and ST075T; ZR control suffix
	70211801	Card Reader Harness Assembly	NR control suffix
12	N/A	Bypass Jumper Wire	
13	510068P	Card Reader and Bracket Assembly	NR and ZR control suffixes
14	70208801	Mounting Plate	Non-Australian models; NY control suffix

N/A = Part no longer available

info@zipnasklade.ru
8(800)500-69-51

© Copyright, Alliance Laundry Systems LLC – DO NOT COPY or TRANSMIT

Network Connection for NetMaster Models

Models HT075L, HT075N, SA075L, SA075N, ST075E, ST075L, ST075N, ST075S, ST075T, STF75L and STF75N
Models with ZC, ZR, ZX and ZY Control Suffixes

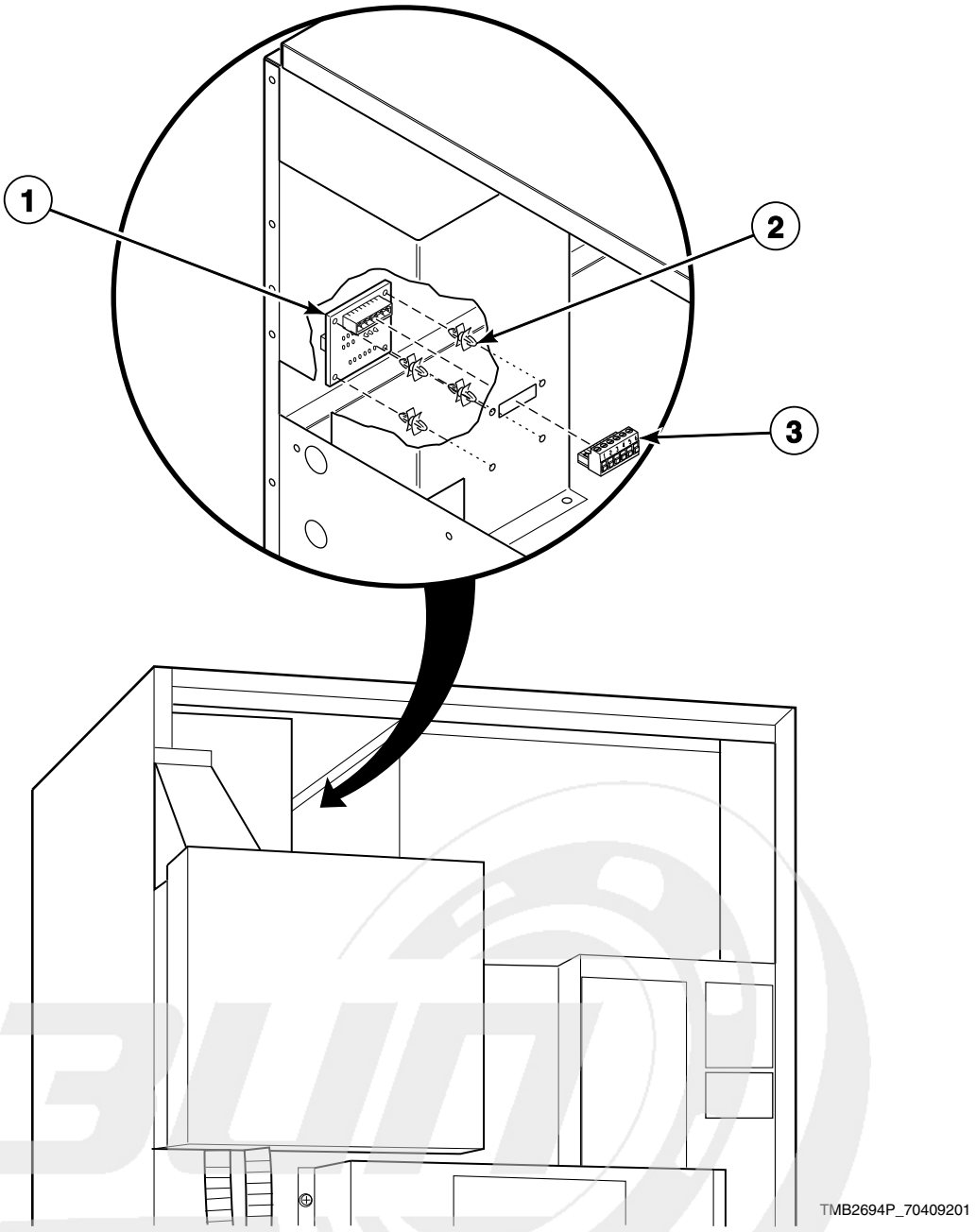

info@zipnasklade.ru
8(800)500-69-51

© Copyright, Alliance Laundry Systems LLC – DO NOT COPY or TRANSMIT

Network Connection for NetMaster Models

REF	PART NO.	DESCRIPTION	COMMENTS
	210016P	Network Board Assembly	ZC, ZR and ZX control suffixes
1	210095P	Communication Board	
2	210098	PC Board Standoff	4 required
3	210099	Communication Connector	

info@zipnasklade.ru
8(800)500-69-51

© Copyright, Alliance Laundry Systems LLC – DO NOT COPY or TRANSMIT

Emergency Stop Button - CE Models and Model UB075E

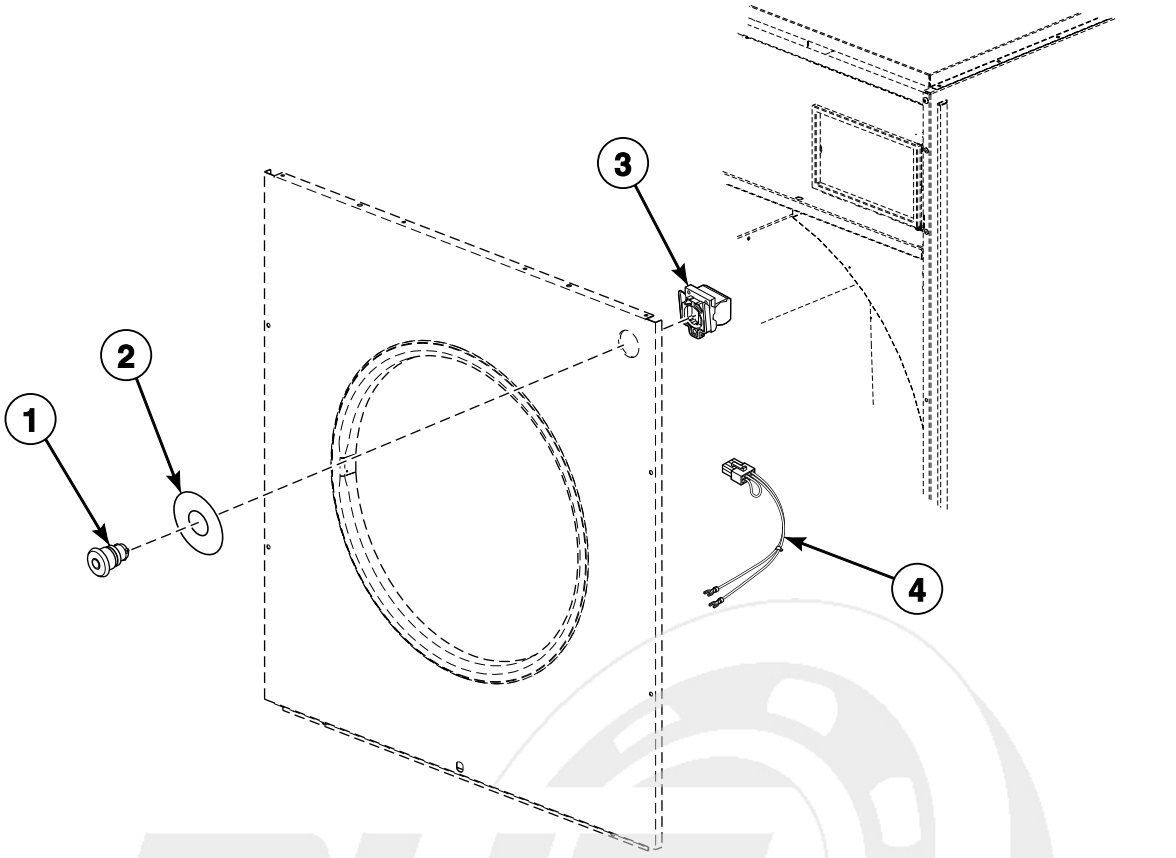

TMB2386P_70409201

info@zipnasklade.ru
8(800)500-69-51

© Copyright, Alliance Laundry Systems LLC – DO NOT COPY or TRANSMIT

Emergency Stop Button - CE Models and Model UB075E

REF	PART NO.	DESCRIPTION	COMMENTS
	F200233700P	Emergency Stop Button Kit	To switch from old style button to new style button
1	44018801	Pushbutton	Models through 9/30/07
	F200233500	Emergency Stop Pushbutton	Models starting 10/1/07
2	44012901	Emergency Stop Label	Model UB075E
	M412235	Emergency Stop Label	All other models
3	44018701	Contact Block	Models through 9/30/07
	44018901	Contact Block	All models except UB075E; Models through 9/30/07; Order in addition to 44018701 Contact Block on models with 3O and R3 control suffixes
	F200233401	Contact Block Switch	Models starting 10/1/07; Replaces 44018701 Contact Block
	F8069501	Contact Switch	All models except UB075E; Models starting 10/1/07; Replaces 44018901 Contact Block; Order in addition to F200233700P Emergency Stop Button Kit on models with 3O and R3 control suffixes starting 7/11/05
4	70083901	Emergency Stop Switch Harness Assembly	Model UB075E; G models starting Serial No. 0707008006; K models; H, S and U models starting Serial No. 0308001308; D models starting Serial No. 0704000046
	44063201P	Front Panel Harness Assembly	D models; Models starting Serial No. 0704000046
	N/A	Emergency Stop Harness	D models; Models starting Serial No. 0704000046

N/A = Part no longer available

info@zipnasklade.ru
8(800)500-69-51

© Copyright, Alliance Laundry Systems LLC – DO NOT COPY or TRANSMIT

Cabinet Front Components (Drawing 1 of 2)

All Models Through Serial No. 0308001307; D and I Models Starting Serial No. 0308001308 Through Serial No. 0703023529; C, L, P and Y Models Starting Serial No. 0308001308; G Models Through Serial No. 0110002231 and Starting Again Serial No. 0707008006 Through Serial No. 0708020563; K Models Through Serial No. 0708020563

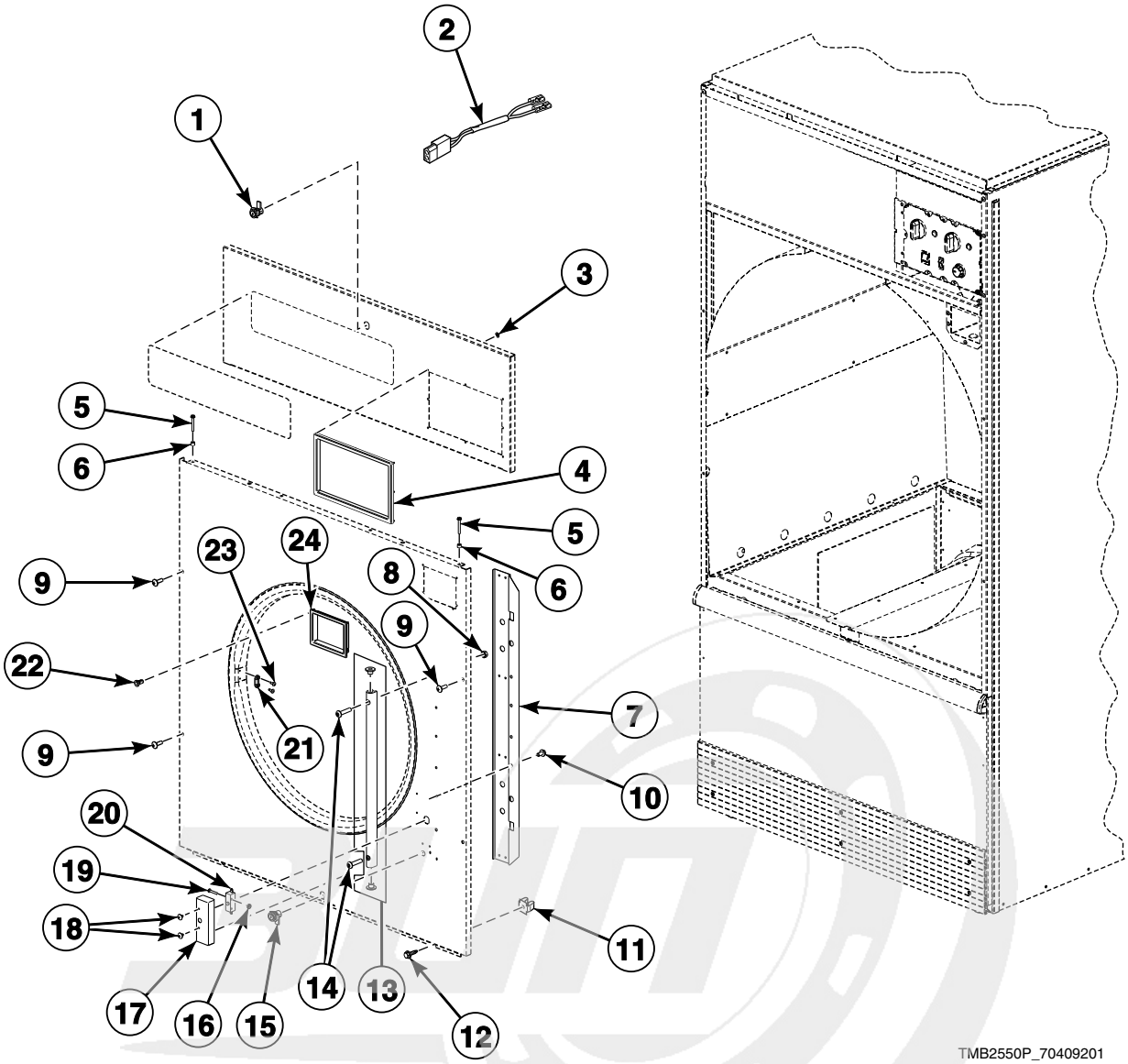

info@zipnasklade.ru
8(800)500-69-51

© Copyright, Alliance Laundry Systems LLC – DO NOT COPY or TRANSMIT

Cabinet Front Components (Drawing 1 of 2)

REF	PART NO.	DESCRIPTION	COMMENTS
	M4379P4	Tumbler Dolly Kit	
1	44089301P	Lock, Key and Nut Kit	Control panel; RL001 key code; Optional if same key is to be used for control lock
	70155601	Key	RL001
2	44023001	Coin Vault Switch Harness	BC, BX, NC, NX, ZC and ZX control suffixes
3	M400977	Nut	Push; 8 required
4	44016301	Control Trim	H models
	44016401	Control Trim	All other models
5	70275801	Screw	
6	56079	Panel Locator	
7	44001801	Door Switch Wire Channel	Models through Serial No. 020802178
8	29786	Nut	
9	70033502	Screw	
	70182601	Screw	For stainless steel panel
10	44023301	Screw	
11	70030501	Expansion Clip	Upper and lower front panel attachment
12	M411072	Screw	6 required; For front panel
13	44035001	Door Hinge Lug Assembly	
14	70033504	Screw	
15	44089301P	Lock, Key and Nut Kit	Lint panel; RL001 key code; Optional if same key is to be used for control lock
	70155601	Key	RL001
	44089302P	Lock, Key and Nut Kit	Lint panel; RL002 key code; Standard coin and card models
	70155602	Key	RL002
16	02788	Nut	
17	44001301	Door Switch Cover	
18	431287	Screw	
19	M402574	Screw	
20	44018201	Door Switch	
21	M401223	Door Latch	
22	M400972	Shadow Box Clip	6 required for item 24
23	M400003	Pop Rivet	
24	70117501	Coin Vault Trim	H models
	70117502	Coin Vault Trim	C, D, G, I, K, L, P and S models

info@zipnasklade.ru
8(800)500-69-51

© Copyright, Alliance Laundry Systems LLC – DO NOT COPY or TRANSMIT

Cabinet Front Components (Drawing 2 of 2)

A, H, N, S and U Models Starting Serial No. 0308001308; D and I Models Starting Serial No. 0704000046;
G and K Models Starting Serial No. 0709000027

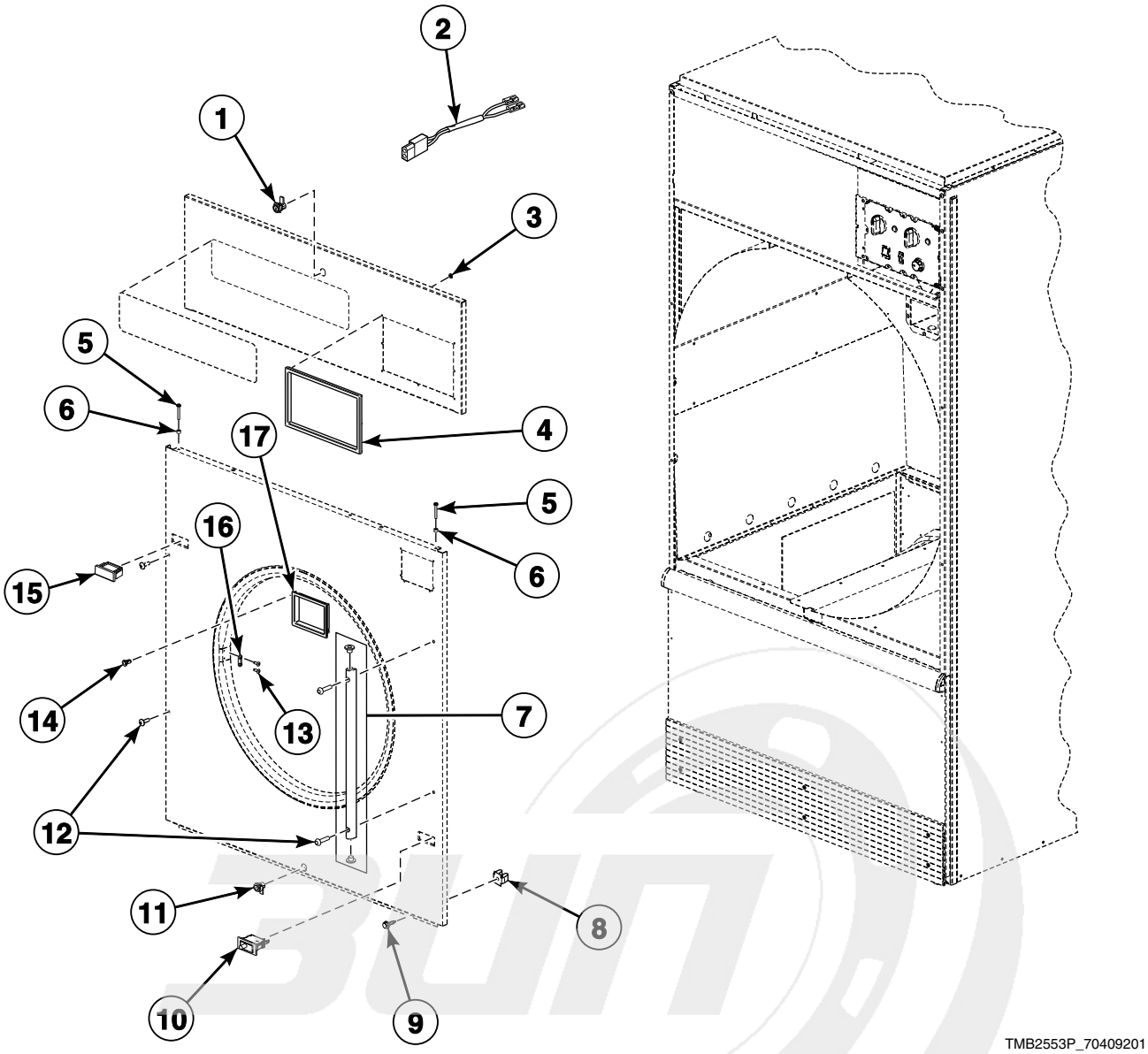

info@zipnasklade.ru
8(800)500-69-51

© Copyright, Alliance Laundry Systems LLC – DO NOT COPY or TRANSMIT

Cabinet Front Components (Drawing 2 of 2)

REF	PART NO.	DESCRIPTION	COMMENTS
	M4379P4	Tumbler Dolly Kit	
1	44089301P	Lock, Key and Nut Kit	RL001 key code; Control panel; Optional if same key is to be used for control lock
	70155601	Key	RL001
2	44023001	Coin Vault Switch Harness	BC, BX, NC, NX, ZC and ZX control suffixes
3	M400977	Nut	8 required per control trim
4	44016301	Control Trim	H models
	44016401	Control Trim	A, G, K, S and U models
5	70275801	Screw	4 required
6	56079	Panel Locator	2 required
7	44035001	Door Hinge Lug Assembly	
8	70030501	Expansion Clip	
9	M411072	Screw	4 required; Front panel; Bottom
10	70413301	Pushbutton Switch	Door switch
11	44089301P	Lock, Key and Nut Kit	RL001 key code; Lint panel; Optional if same key is to be used for control lock
	70155601	Key	RL001
	44089302P	Lock, Key and Nut Kit	RL002 key code; Lint panel; Standard coin and card models
	70155602	Key	RL002
12	70033502	Screw	4 required for painted panels; 2 required for stainless steel panels in addition to 2 of 70182601 Screw
	70182601	Screw	2 required for stainless steel panels in addition to 2 of 70033502 Screw
13	M400003	Pop Rivet	2 per door latch; 1/8 inch
14	M400972	Shadow Box Clip	6 required
15	44057801W	Switch Hole Plug	White
	44057801Q	Switch Hole Plug	Bisque
	44057801B	Switch Hole Plug	Black; For stainless steel and turquoise models
16	M401223	Door Latch	2 required
17	70117501	Coin Vault Trim	H models; Gray
	70117502	Coin Vault Trim	A, G, K, S and U models; Black

info@zipnasklade.ru
8(800)500-69-51

© Copyright, Alliance Laundry Systems LLC – DO NOT COPY or TRANSMIT

Cabinet Panels and Nameplates (Drawing 1 of 2)

All Models Through Serial No. 0308001307; D and I Models Starting Serial No. 0308001308 Through Serial No. 0703023529; C, L, P and Y Models Starting Serial No. 0308001308; G Models Through Serial No. 0110002231 and Starting Again Serial No. 0707008006 Through Serial No. 0708020563; K Models Through Serial No. 0708020563

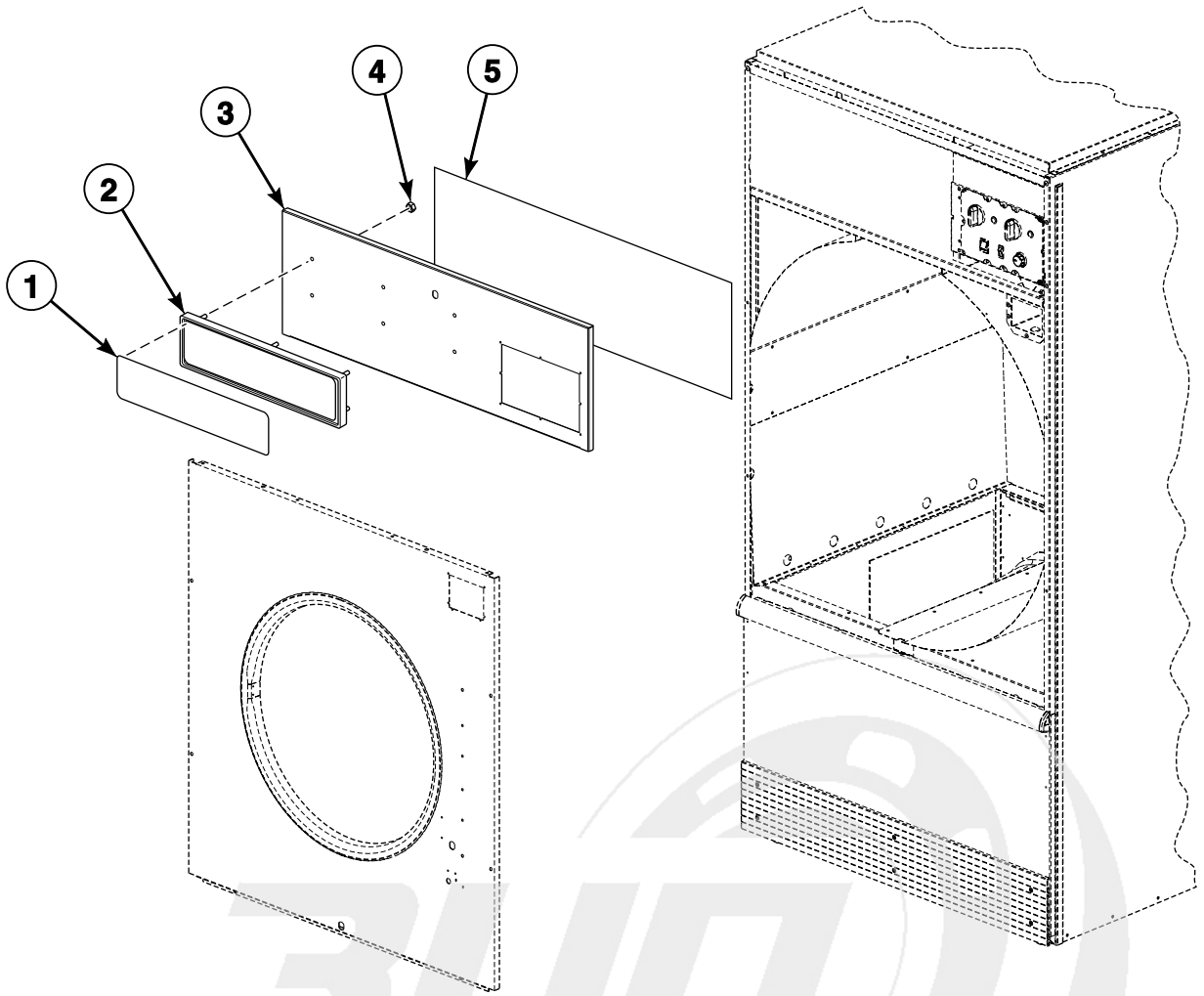

TMB2551P_70409201

info@zipnasklade.ru
8(800)500-69-51

© Copyright, Alliance Laundry Systems LLC – DO NOT COPY or TRANSMIT

Cabinet Panels and Nameplates (Drawing 1 of 2)

REF	PART NO.	DESCRIPTION	COMMENTS
1	44010401	Nameplate	H models
	44010601	Nameplate	S models
	N/A	Nameplate Overlay	A models
	M412963	Nameplate Overlay	U models
	70128901	Nameplate Overlay	P models
	70243901	Nameplate	L models
	44104501	Nameplate Overlay	Y models
	44062901	Nameplate	C models
	44046801	Nameplate	D and I models
	44130601	Nameplate Overlay	K models; BG, OM and RM control suffixes
	44144401	Nameplate Overlay	K models; NC and NY control suffixes
	70410201	Nameplate Overlay	G models; Models starting Serial No. 0707008006
2	70117401	Nameplate Bezel	L and P models
3	44000117*P	Control Panel	A, H, P, S and U models
	44000118P	Control Panel	A, H, P, S and U models; Stainless steel
	44000119*	Control Panel	GT and GU models; Models through Serial No. 0110002231
	N/A	Control Panel	GT and GU models; Models through Serial No. 0110002231; Stainless steel
	44000117BP	Control Panel	L models
	N/A	Control Panel	Y models
	N/A	Control Panel	Y models; Stainless steel
	44040001*P	Control Panel	C, D and I models; 3O, 3V, 3X, CD, MT, R3 and RT control suffixes; Manual
	44040002	Control Panel	C, D and I models; 3O, 3V, 3X, CD, MT, R3 and RT control suffixes; Manual; Stainless steel
	44040003*	Control Panel	C, D and I models; DO, DV and RD control suffixes; Electronic
	44040004	Control Panel	C, D and I models; DO, DV and RD control suffixes; Electronic; Stainless steel
	44040005*	Control Panel	G models starting Serial No. 0707008006; K models
	44040006	Control Panel	G models starting Serial No. 0707008006; K models; Stainless steel
4	M400977	Nut	L and P models
5	44020601	Insulation	Used inside access panel

*** Add Letter To Designate Color. L - Almond P - Turquoise Q - Bisque W - White**
N/A = Part no longer available

info@zipnasklade.ru
8(800)500-69-51

© Copyright, Alliance Laundry Systems LLC – DO NOT COPY or TRANSMIT

Cabinet Panels and Nameplates (Drawing 2 of 2)

A, H, N, S and U Models Starting Serial No. 0308001308; D and I Models Starting Serial No. 0704000046;
G and K Models Starting Serial No. 0709000027

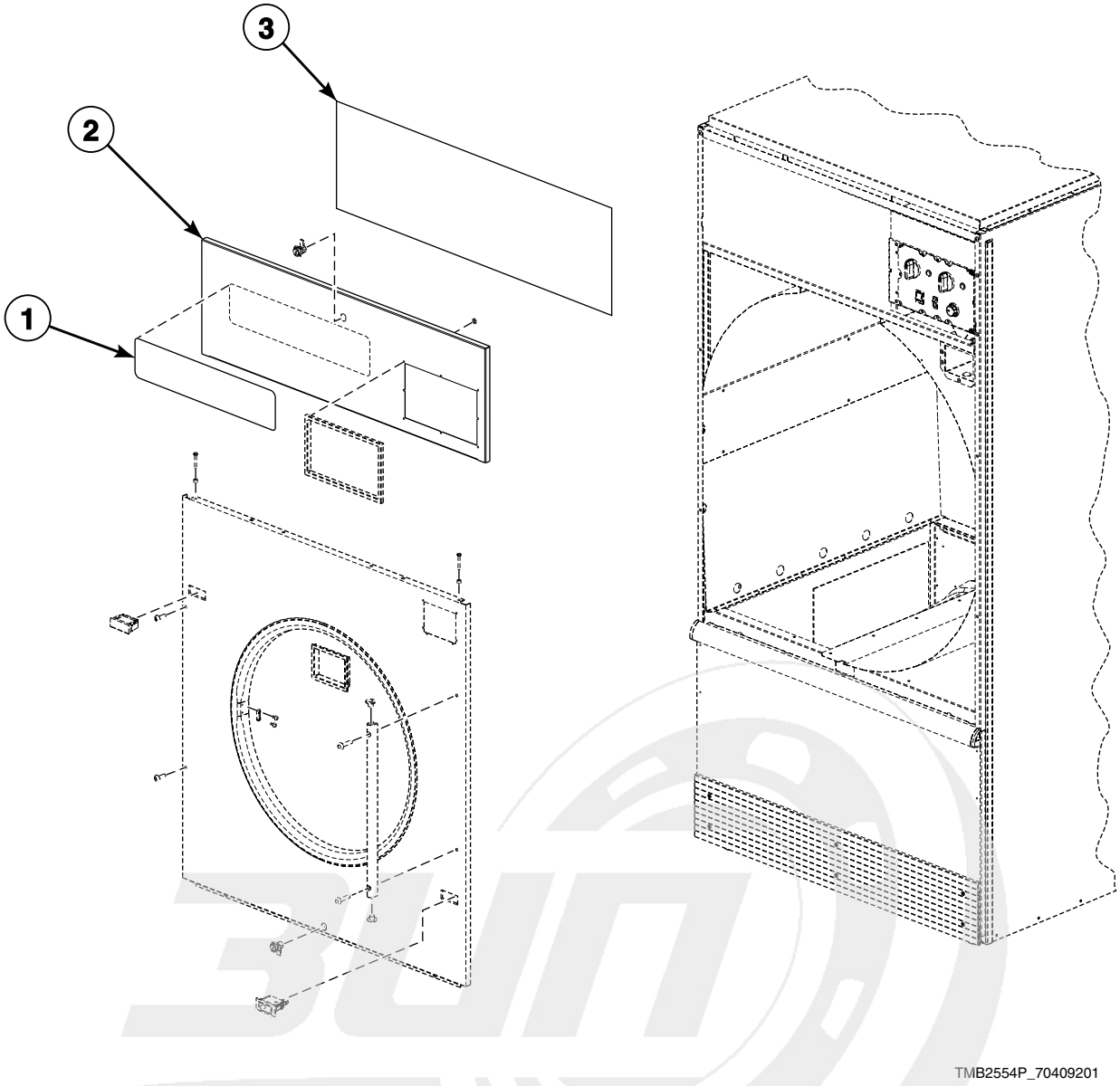

info@zipnasklade.ru
8(800)500-69-51

© Copyright, Alliance Laundry Systems LLC – DO NOT COPY or TRANSMIT

Cabinet Panels and Nameplates (Drawing 2 of 2)

REF	PART NO.	DESCRIPTION	COMMENTS
1	44010401	Nameplate	H models
	44010601	Nameplate	S models
	N/A	Nameplate Overlay	A models
	M412963	Nameplate Overlay	U models
	44035801	Nameplate	N models
	44046801	Nameplate	D and I models
	70410201	Nameplate Overlay	G models
	44144401	Nameplate Overlay	K models
2	44040001*P	Control Panel	D and I models; 3O, 3V, 3X, CD, MT, R3 and RT control suffixes; Manual
	44040002	Control Panel	D and I models; 3O, 3V, 3X, CD, MT, R3 and RT control suffixes; Manual; Stainless steel
	44040003*	Control Panel	D and I models; DO, DV and RD control suffixes; Electronic
	44040004	Control Panel	D and I models; DO, DV and RD control suffixes; Electronic; Stainless steel
	44000117*P	Control Panel	All other models
	44000118P	Control Panel	All other models; Stainless steel
3	44020601	Insulation	Used inside access panel

*** Add Letter To Designate Color. L - Almond Q - Bisque W - White**
N/A = Part no longer available

info@zipnasklade.ru
8(800)500-69-51

© Copyright, Alliance Laundry Systems LLC – DO NOT COPY or TRANSMIT

Front Panel Assemblies (Drawing 1 of 3)

All Models Through Serial No. 0308001307; D and I Models Starting Serial No. 0308001308 Through Serial No. 0703023529; C, L, P and Y Models Starting Serial No. 0308001308; G Models Through Serial No. 0110002231 and Starting Again Serial No. 0707008006 Through Serial No. 0708020563; K Models Through Serial No. 0708020563

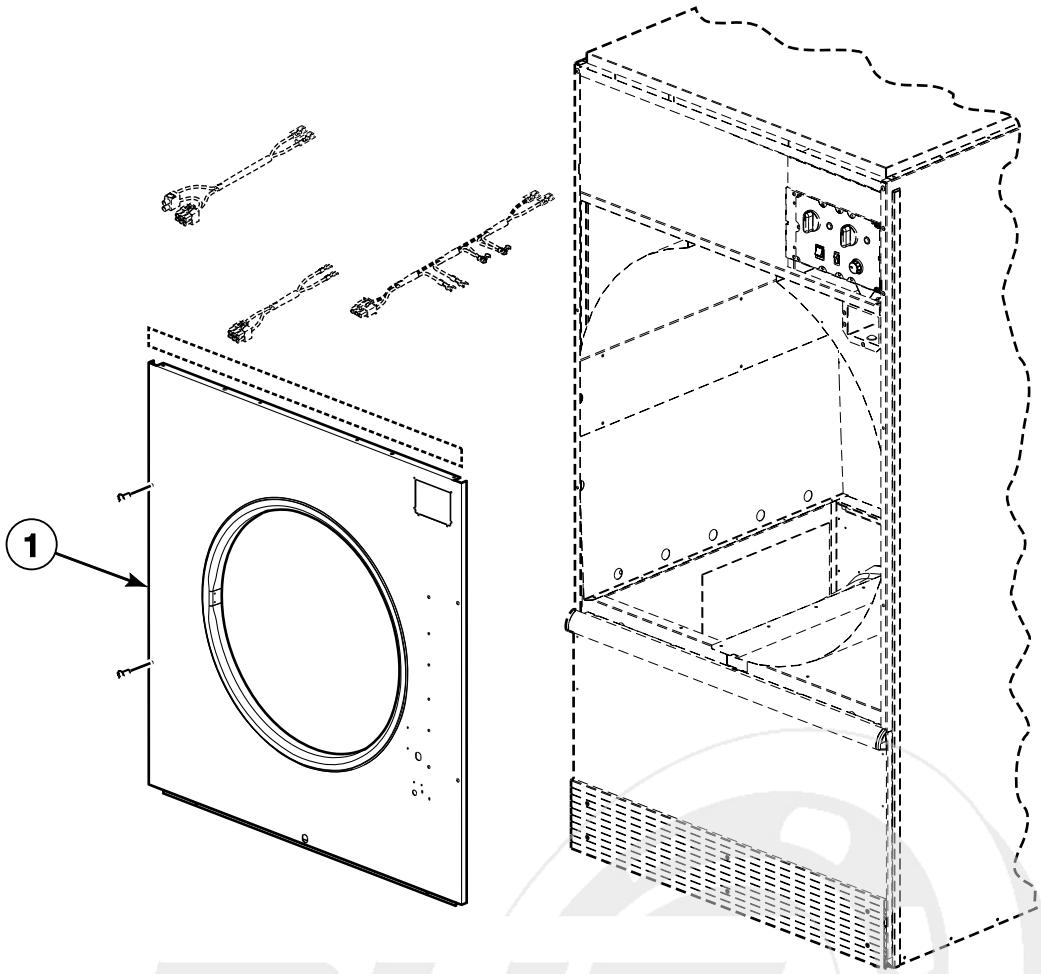

TMB2552PA_70409201

info@zipnasklade.ru
8(800)500-69-51

© Copyright, Alliance Laundry Systems LLC – DO NOT COPY or TRANSMIT

Front Panel Assemblies (Drawing 1 of 3)

REF	PART NO.	DESCRIPTION	COMMENTS
1	44077801*P	Front Panel Assembly	All models except UB075E with BC, BX, CD, CX, DV, NC, NX, SD, SX, ZC and ZX control suffixes through Serial No. 0308001307
	44077802P	Front Panel Assembly	All models except UB075E with BC, BX, CD, CX, DV, NC, NX, SD, SX, ZC and ZX control suffixes through Serial No. 0308001307; Stainless steel
	N/A	Front Panel Assembly	All models except UB075E with BL, BU, BY, CY, DV, NR, NY, ZR and ZY control suffixes through Serial No. 0308001307
	N/A	Front Panel Assembly	All models except UB075E with BL, BU, BY, CY, DV, NR, NY, ZR and ZY control suffixes through Serial No. 0308001307; Stainless steel
	44077805*P	Front Panel Assembly	Non-CE models except UB075E; Models through Serial No. 0308001307; DO, MT, OM, QT, RD, RM, RQ and RT control suffixes
	44077806P	Front Panel Assembly	Non-CE models except UB075E; Models through Serial No. 0308001307; DO, MT, OM, QT, RD, RM, RQ and RT control suffixes; Stainless steel
	44077811*P	Front Panel Assembly	CE models and model UB075E; Models through Serial No. 0308001307; DO, MT, OM, QT, RD, RM, RQ and RT control suffixes
	44077812	Front Panel Assembly	All CE models except UB075E; Models through Serial No. 0308001307; DO, MT, OM, QT, RD, RM, RQ and RT control suffixes; Stainless steel
	44077909*	Front Panel Assembly	C, D, I, L and P models starting Serial No. 0308001308; GT and GU models through Serial No. 0110002231; BC, BX, CD, CX, DV, NC, NX, SD, SX, ZC and ZX control suffixes
	44077910	Front Panel Assembly	C, D, I, L and P models starting Serial No. 0308001308; GT and GU models through Serial No. 0110002231; BC, BX, CD, CX, DV, NC, NX, SD, SX, ZC and ZX control suffixes; Stainless steel
	44077911*	Front Panel Assembly	C, D, I, L, P and Y models starting Serial No. 0308001308; GT and GU models through Serial No. 0110002231; BL, BU, BY, CY, DV, NR, NY, ZR and ZY control suffixes
	44077912	Front Panel Assembly	C, D, I, L, P and Y models starting Serial No. 0308001308; GT and GU models through Serial No. 0110002231; BL, BU, BY, CY, DV, NR, NY, ZR and ZY control suffixes; Stainless steel
	44077913*P	Front Panel Assembly	C, D, I, L, P and Y non-CE models starting Serial No. 0308001308; GA and GT models through Serial No. 0110002231 and starting again Serial No. 0707008006; KA and KT models; DO, MT, OM, QT, R3, RD, RM, RQ and RT control suffixes
	44077914	Front Panel Assembly	C, D, I, L, P and Y non-CE models starting Serial No. 0308001308; GA and GT models through Serial No. 0110002231 and starting again Serial No. 0707008006; KA and KT models; DO, MT, OM, QT, R3, RD, RM, RQ and RT control suffixes; Stainless steel
	44077915*P	Front Panel Assembly	C, D, L and P CE models starting Serial No. 0308001308; GU models through Serial No. 0110002231 and starting again Serial No. 0707008006; KU models; DO, MT, OM, QT, R3, RD, RM, RQ and RT control suffixes
	44077916	Front Panel Assembly	C, D, L and P CE models starting Serial No. 0308001308; GU models through Serial No. 0110002231 and starting again Serial No. 0707008006; KU models; DO, MT, OM, QT, R3, RD, RM, RQ and RT control suffixes; Stainless steel

*** Add Letter To Designate Color. L - Almond P - Turquoise Q - Bisque W - White**

N/A = Part no longer available

NOTE: All front panel assemblies include M401223 Door Latch and 2 of M400003 Pop Rivet

info@zipnashade.ru
8(800)500 69 51

© Copyright, Alliance Laundry Systems LLC – DO NOT COPY or TRANSMIT

Front Panel Assemblies (Drawing 2 of 3)

All Models Through Serial No. 0308001307; D and I Models Starting Serial No. 0308001308 Through Serial No. 0703023529; C, L, P and Y Models Starting Serial No. 0308001308; G Models Through Serial No. 0110002231 and Starting Again Serial No. 0707008006 Through Serial No. 0708020563; K Models Through Serial No. 0708020563

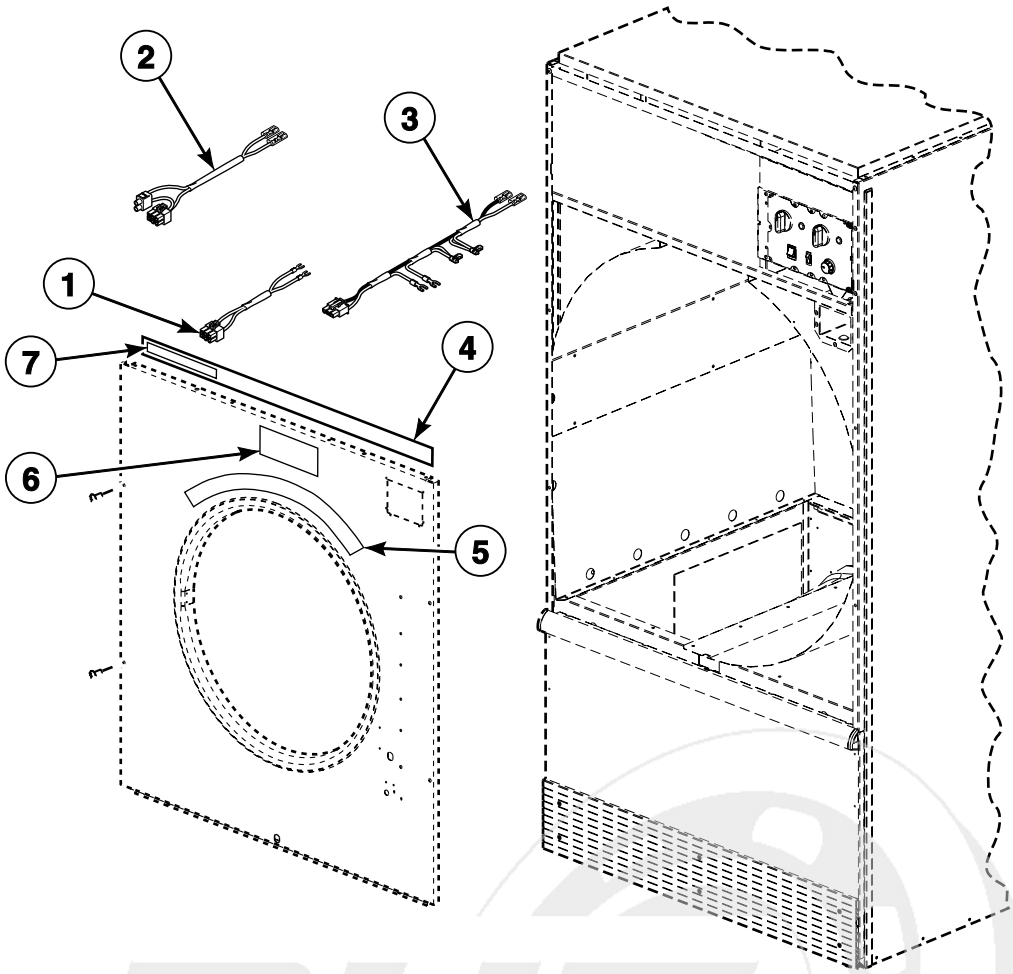

TMB2808P_70409201

info@zipnasklade.ru
8(800)500-69-51

© Copyright, Alliance Laundry Systems LLC – DO NOT COPY or TRANSMIT

Front Panel Assemblies (Drawing 2 of 3)

REF	PART NO.	DESCRIPTION	COMMENTS
1	70083901	Emergency Stop Switch Harness Assembly	Use with item 2
2	44063201P	Front Panel Harness Assembly	H, L, P, S and U CE models; GU models through Serial No. 0110002231; Use with item 1
3	44006901	Front Panel Harness	A, H, L, N, P, S, U and Y non-CE models; GT models through Serial No. 0110002231
	44007001P	Front Panel Harness	Non-coin; H, L, P, S and U CE models except UB075E; GU models through Serial No. 0110002231
	44047801	Front Panel Harness Assembly	C, D and I non-CE models; DO, MT, RD and RT control suffixes; Models without emergency stop
	44063101P	Front Panel Harness Assembly	A, H, L, N, P, S, U and Y non-CE models except UB075E; GT models through Serial No. 0110002231; Models without emergency stop
	44047901	Front Panel Harness Assembly	C and D CE models; DO, MT, RD and RT control suffixes
4	70399402	Access Panel Trim	G models starting Serial No. 0707008006; K models; Mounts over front panel assembly and control panel
5	M410892	Warning Label	
6	44128901	Fire Suppression System Label	G and K models
7	70414001	Label	K models

info@zipnasklade.ru
8(800)500-69-51

© Copyright, Alliance Laundry Systems LLC – DO NOT COPY or TRANSMIT

Front Panel Assemblies (Drawing 3 of 3)

A, H, N, S and U Models Starting Serial No. 0308001308; D and I Models Starting Serial No. 0704000046;
G and K Models Starting Serial No. 0709000027

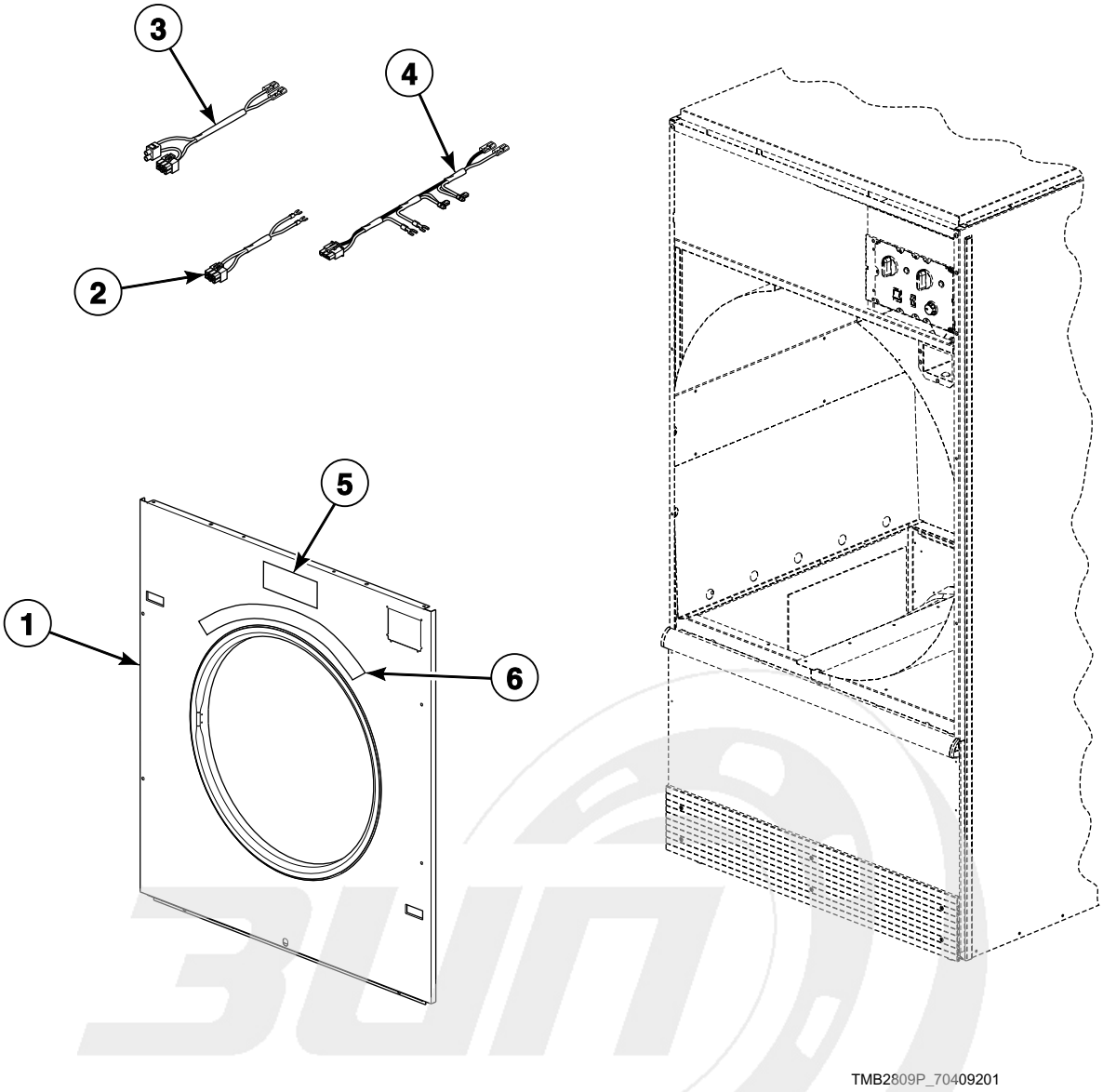

info@zipnasklade.ru
8(800)500-69-51

© Copyright, Alliance Laundry Systems LLC – DO NOT COPY or TRANSMIT

Front Panel Assemblies (Drawing 3 of 3)

REF	PART NO.	DESCRIPTION	COMMENTS
1	44077901*P	Front Panel Assembly	All models except UB075E with BC, BX, CD, CX, NC, NX, SD, SX, ZC and ZX control suffixes
	44077902P	Front Panel Assembly	All models except UB075E with BC, BX, CD, CX, NC, NX, SD, SX, ZC and ZX control suffixes; Stainless steel
	44077903*	Front Panel Assembly	All models except UB075E with BL, BU, BY, CY, NR, NY, ZR and ZY control suffixes
	44077904P	Front Panel Assembly	All models except UB075E with BL, BU, BY, CY, NR, NY, ZR and ZY control suffixes; Stainless steel
	44077905*P	Front Panel Assembly	Non-CE models except UB075E; BG, MT, OM, QT, RM, RQ and RT control suffixes
	44077906P	Front Panel Assembly	Non-CE models except UB075E; MT, OM, QT, RM, RQ and RT control suffixes; Stainless steel
	44077907*P	Front Panel Assembly	CE models and model UB075E; 3O, MT, OM, QT, R3, RM, RQ and RT control suffixes
	44077908P	Front Panel Assembly	All CE models except UB075E; 3O, MT, OM, QT, R3, RM, RQ and RT control suffixes; Stainless steel
2	70083901	Emergency Stop Switch Harness Assembly	Use with item 3
3	44063201P	Front Panel Harness Assembly	Use with item 2
4	44063101P	Front Panel Harness Assembly	All models except UB075E; Models without emergency stop
5	44128901	Fire Suppression System Label	G and K models
6	M410892	Warning Label	

*** Add Letter To Designate Color. L - Almond P - Turquoise Q - Bisque W - White**

NOTE: All front panel assemblies include M401223 Door Latch and 2 of M400003 Pop Rivet

info@zipnasklade.ru
8(800)500-69-51

© Copyright, Alliance Laundry Systems LLC – DO NOT COPY or TRANSMIT

Lint Panel Switch Assembly - Models Through Serial No. 020802177

All Models Except C, D, GA, I, K, LA and Thermal Oil Models

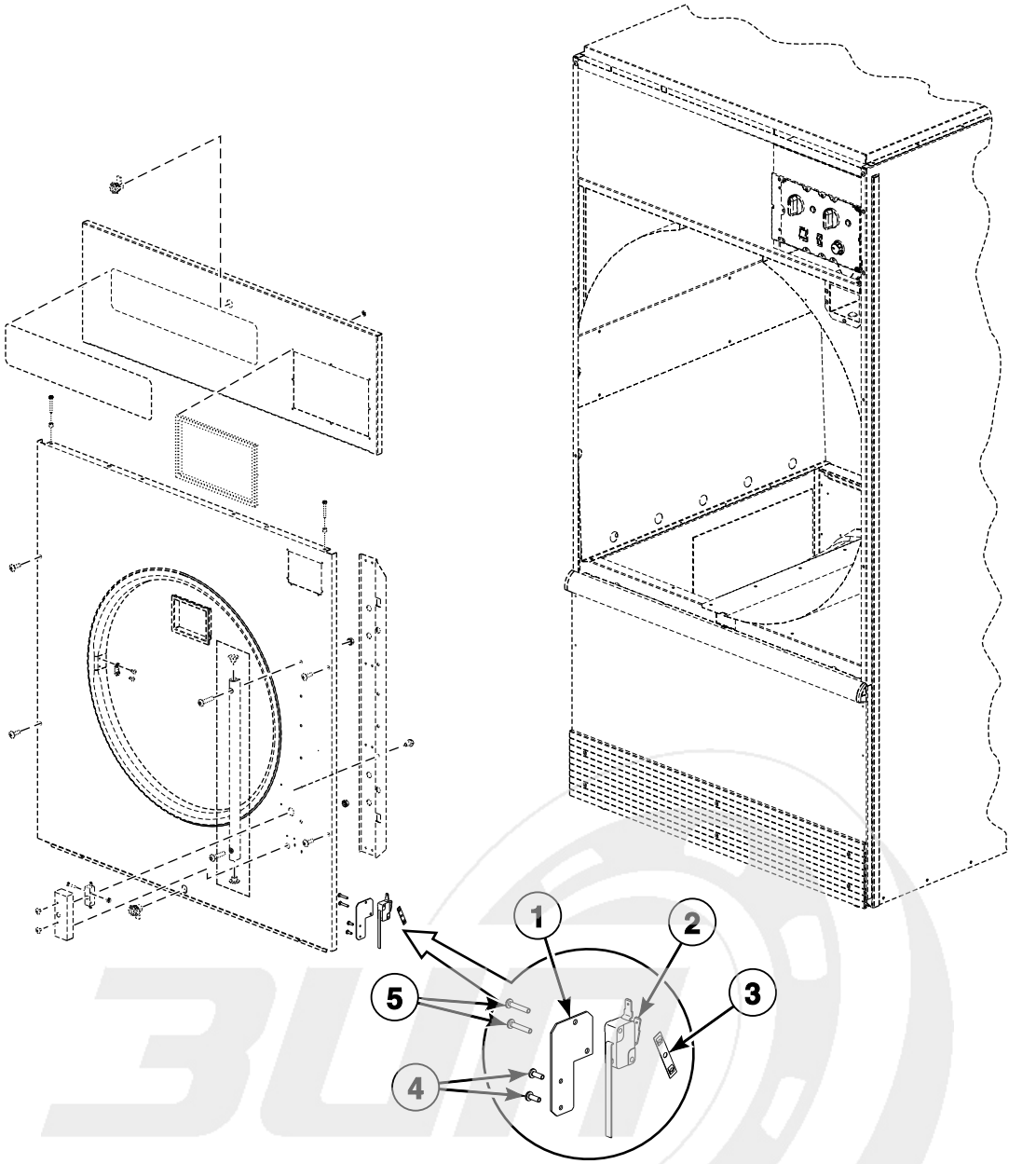

TMB2125P_70409201

info@zipnasklade.ru
8(800)500-69-51

© Copyright, Alliance Laundry Systems LLC – DO NOT COPY or TRANSMIT

Lint Panel Switch Assembly - Models Through Serial No. 020802177

REF	PART NO.	DESCRIPTION	COMMENTS
1	44011501	Lint Panel Switch Bracket	
2	44011601	Lever Arm Switch	
3	M400979	Nut	
4	51782	Screw	
5	M401938	Screw	

info@zipnasklade.ru
8(800)500-69-51

© Copyright, Alliance Laundry Systems LLC – DO NOT COPY or TRANSMIT

Lint Panel Switch Assembly - Models Starting Serial No. 020802178

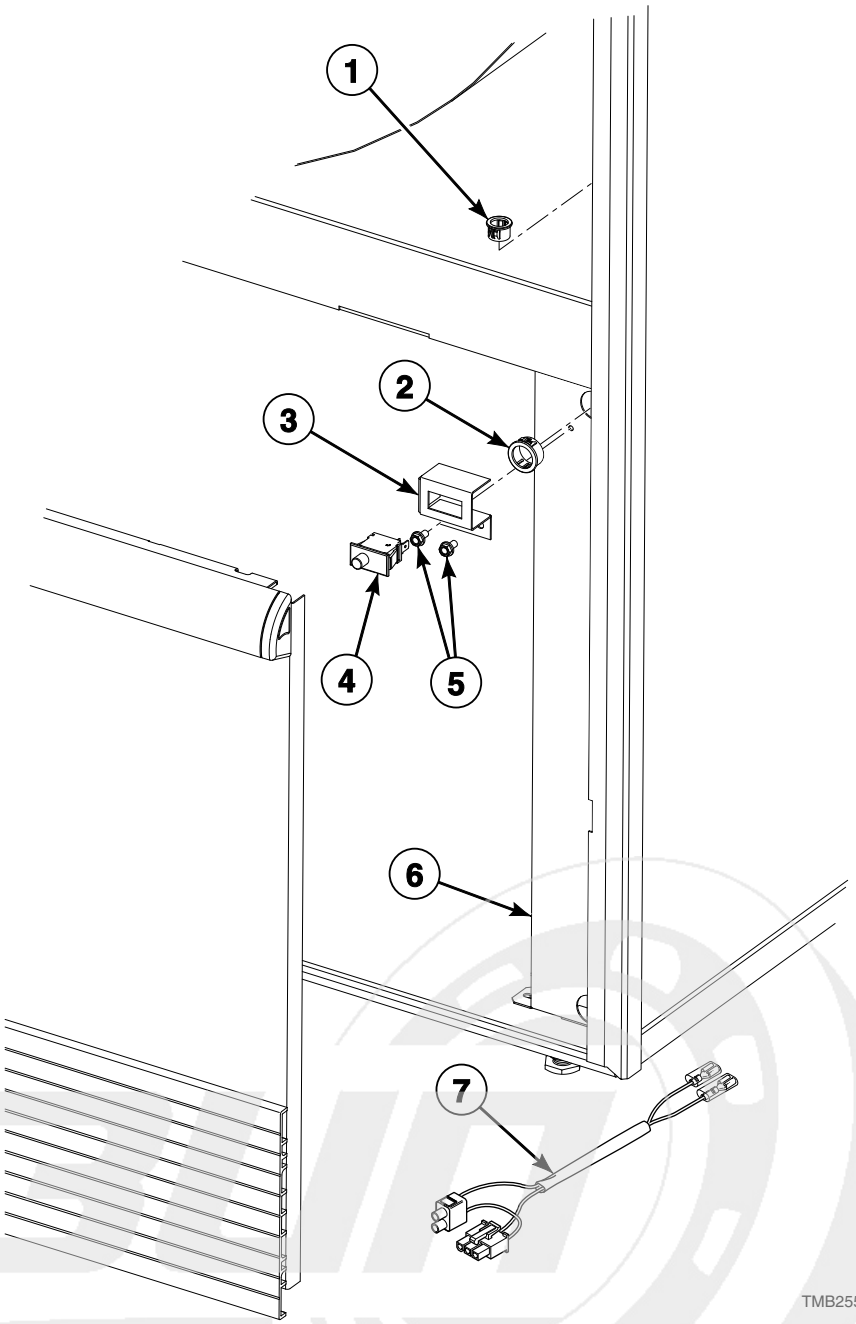

info@zipnasklade.ru
8(800)500-69-51

© Copyright, Alliance Laundry Systems LLC – DO NOT COPY or TRANSMIT

Lint Panel Switch Assembly - Models Starting Serial No. 020802178

REF	PART NO.	DESCRIPTION	COMMENTS
1	M411826	Snap Bushing	
2	M400770	Snap Bushing	
3	44118601	Lint Panel Switch Bracket	
4	70413301	Pushbutton Switch	C, D and I models
	70413401	Switch Assembly	All other models
5	430497	Screw	
6	44001201	Front Pillar	
7	44048101P	Lint Panel Harness Assembly	

info@zipnasklade.ru
8(800)500-69-51

© Copyright, Alliance Laundry Systems LLC – DO NOT COPY or TRANSMIT

Lower Cabinet Front Components

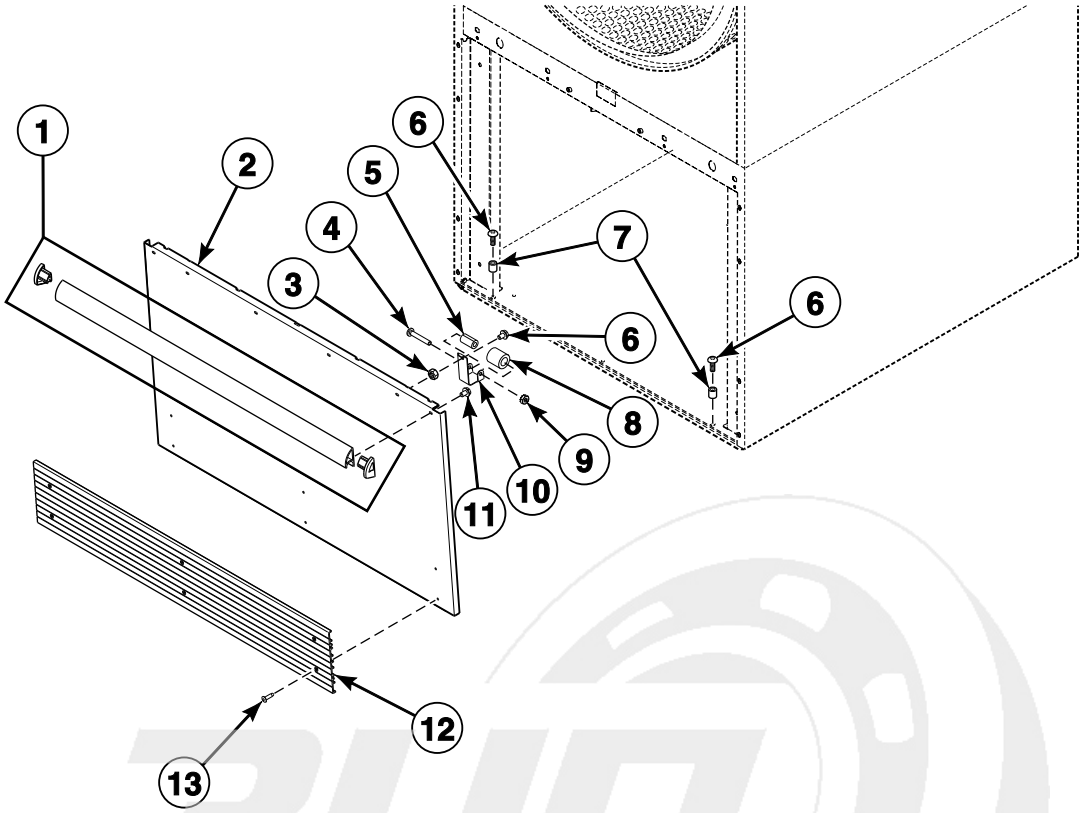

TMB2057P_70409201

info@zipnasklade.ru
8(800)500-69-51

© Copyright, Alliance Laundry Systems LLC – DO NOT COPY or TRANSMIT

Lower Cabinet Front Components

REF	PART NO.	DESCRIPTION	COMMENTS
	70114001	Clean Lint Compartment Sticker	Lint compartment must be cleaned daily
	70404001	Roller Bracket Assembly	Includes items 4, 5 and 8-10
1	70154405	Handle and Caps Assembly	A, C, D, I, L, P, S, U and Y models; Black; Includes endcaps
	70154406	Handle and Caps Assembly	GT and GU models through Serial No. 0110002231; H and N models; Gray; Includes endcaps
	70407202	Handle Bumper	G models starting Serial No. 0707008006; K models; Black and blue; Does not include endcaps
2	44000001*P	Lint Panel	
	44000002P	Lint Panel	Stainless steel
3	51236	Nut	
4	70072801	Screw	
5	70030201	Roller Catch Spacer	
6	70132301	Screw	
7	56079	Panel Locator	
8	70297601	Roller Catch Wheel	
9	23951	Nut	
10	70030301	Roller Catch Arm	
11	430757	Screw	4 required
12	70117607	Kickplate	A, C, D, I, K, L, P, S, U and Y models; G models starting Serial No. 0707008006; Black
	70117608	Kickplate	GT and GU models through Serial No. 0110002231; H and N models; Gray
13	70126301	Pop Rivet	A, C, D, I, K, L, P, S, U and Y models; G models starting Serial No. 0707008006; Black; 6 required
	70126401	Pop Rivet	GT and GU models through Serial No. 0110002231; H and N models; Gray; 6 required

*** Add Letter To Designate Color. L - Almond Q - Bisque W - White**

info@zipnasklade.ru
8(800)500-69-51

© Copyright, Alliance Laundry Systems LLC – DO NOT COPY or TRANSMIT

Cabinet Limit and Thermistor Assembly

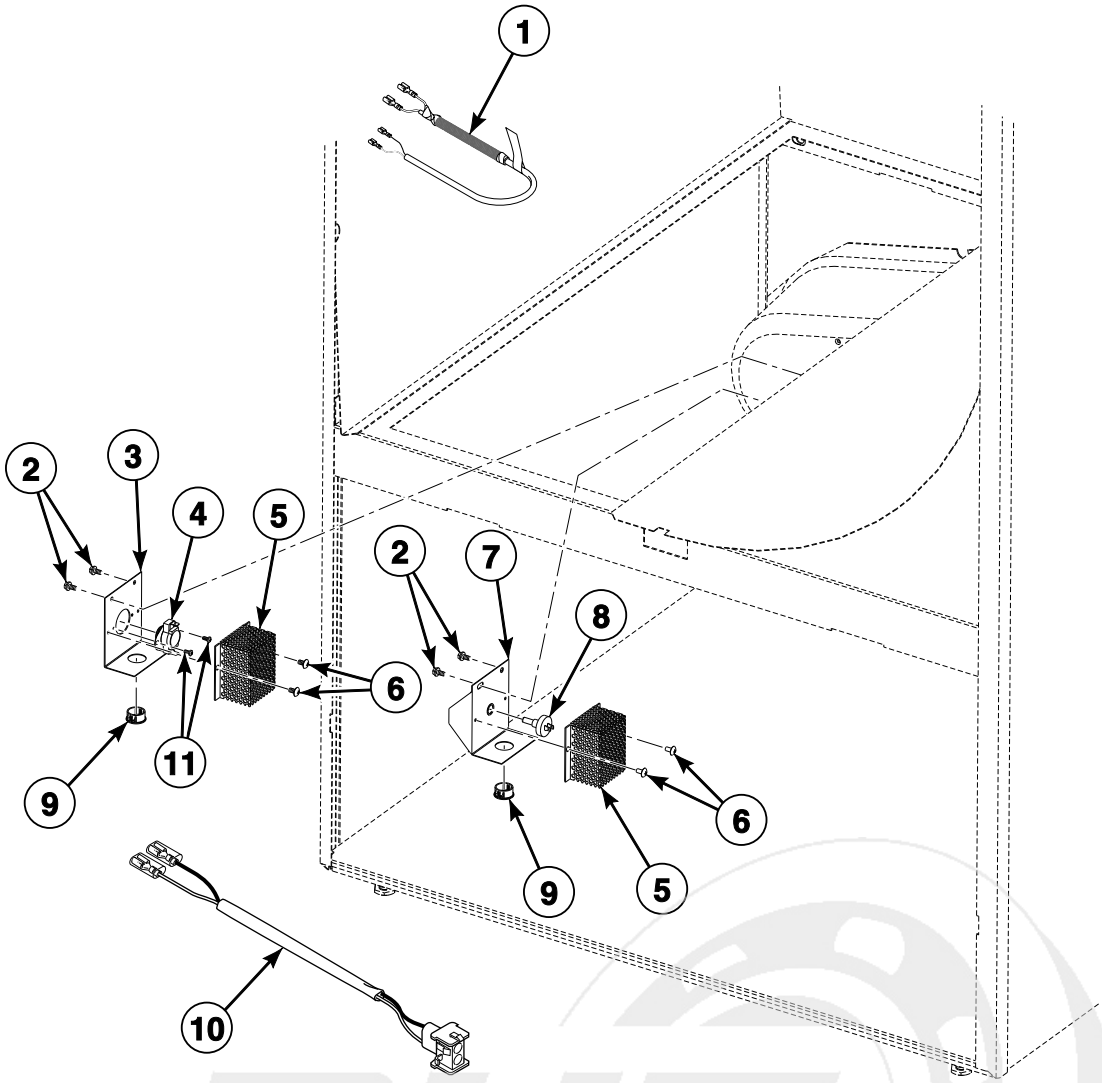

TMB2557P_70409201

info@zipnasklade.ru
8(800)500-69-51

© Copyright, Alliance Laundry Systems LLC – DO NOT COPY or TRANSMIT

Cabinet Limit and Thermistor Assembly

REF	PART NO.	DESCRIPTION	COMMENTS
1	M412670	Cabinet Limit Harness Assembly	GU electric and gas models through Serial No. 0110002231; H, L, P, S and U CE electric and gas models
	M413693P	Cabinet Limit Harness Assembly	A, H, K, L, N, P, S, U and Y non-CE electric and gas models; GA and GT electric and gas models through Serial No. 0110002231 and starting again Serial No. 0707008006
2	430497	Screw	Electric and gas models
3	M400838	Thermodisc Bracket	Electric and gas models
4	M411813	Limit Thermostat	Electric models
	M410542	Limit Thermostat	Non-CE and non-Australian gas models
	M411941	Manual Reset Thermostat	CE and Australian gas models
	N/A	Cabinet Limit Assembly	Steam models
5	M414477	Thermostat Cover	Electric and gas models
6	M400664	Screw	Electric and gas models
7	44051201	Thermistor Bracket Assembly	
8	M414704	Thermistor	
9	M400770	Snap Bushing	Electric and gas models
10	44016901P	Thermistor Cable	
11	M402797	Screw	Electric and gas models

N/A = Part no longer available

info@zipnasklade.ru
8(800)500-69-51

© Copyright, Alliance Laundry Systems LLC – DO NOT COPY or TRANSMIT

Cabinet Components

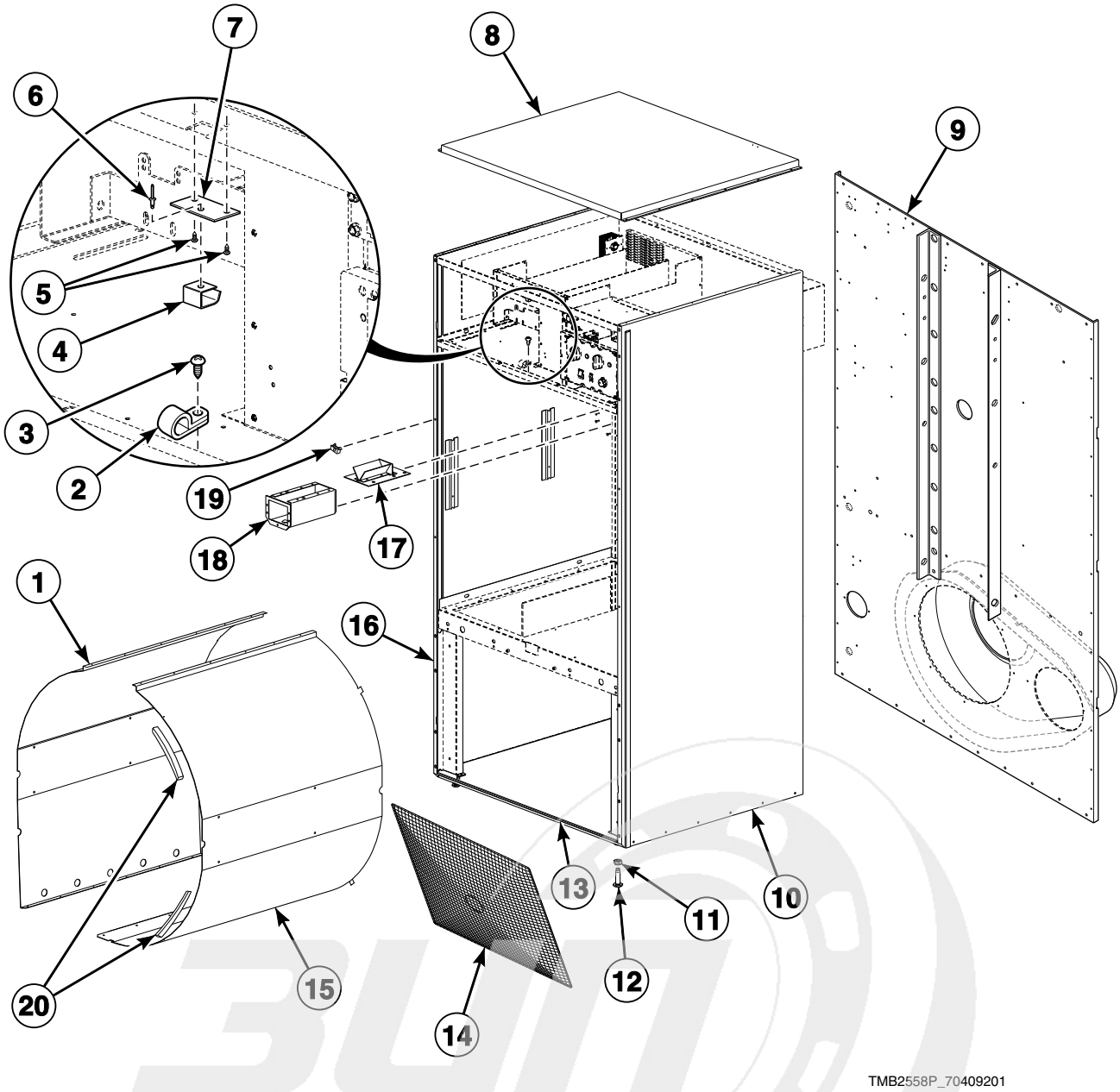

info@zipnasklade.ru
8(800)500-69-51

© Copyright, Alliance Laundry Systems LLC – DO NOT COPY or TRANSMIT

Cabinet Components

REF	PART NO.	DESCRIPTION	COMMENTS
	298P4P	Spray Paint	White
	297P4	Spray Paint	Almond
	286P4	Spray Paint	Blue
	122P4P	Porcelain Touch-Up Paint	White
	215P4P	Porcelain Touch-Up Paint	Almond
	370P4P	Porcelain Touch-Up Paint	Bisque
1	44005301P	Baffle	Left
2	M404550	Cable Screw Clamp	A, H, N, S and U models; Models starting Serial No. 0308001308
3	430497	Screw	A, H, N, S and U models; Models starting Serial No. 0308001308
4	431318	Control Door Latch	
5	431287	Screw	
6	M400003	Pop Rivet	
7	44003201	Latch Mounting Bracket	
8	M414676P	Top Cover Pan	Electric and gas models
	M414760	Top Cover	Steam models
9	M414747	Rear Panel Assembly	All models except STF75L, STF75N, UTF75L and UTF75N
10	44004701WP	Side Panel	Models through Serial No. 0308001307; Right
	44056702*P	Side Panel and Bracket Assembly	Models starting Serial No. 0308001308; Right
11	21899	Nut	Right
12	70247701	Screw	Leveling leg
13	44000701	Bottom Pan	
14	44063601	Lint Screen	
15	44005001P	Baffle	Right
	44065601P	Baffle	Right; Models equipped with fire suppression system
16	44004801*	Side Panel	Models through Serial No. 0308001307; Left
	44056802*	Side Panel and Bracket Assembly	Models starting Serial No. 0308001308; Left
17	70296401	Coin Chute Assembly	Wide; Includes 6 of 70058502 Pop Rivet
18	70180101	Coin Vault Assembly	Includes 5 of 70058502 Pop Rivet
19	70030401	Nut	U-clip
20	70015701	Baffle Gasket	

*** Add Letter To Designate Color. L - Almond Q - Bisque W - White**

info@zipnasklade.ru
8(800)500-69-51

© Copyright, Alliance Laundry Systems LLC – DO NOT COPY or TRANSMIT

Door and Hinge Components (Drawing 1 of 2)

A, H, S and U Models Through Serial No. 0308001307;
C, L, N, P and Y Models; D and I Models Through Serial No. 0703023529;
G Models Through Serial No. 0110002231 and Starting Again Serial No. 0707008006 Through Serial No. 0708020563;
K Models Through Serial No. 0708020563

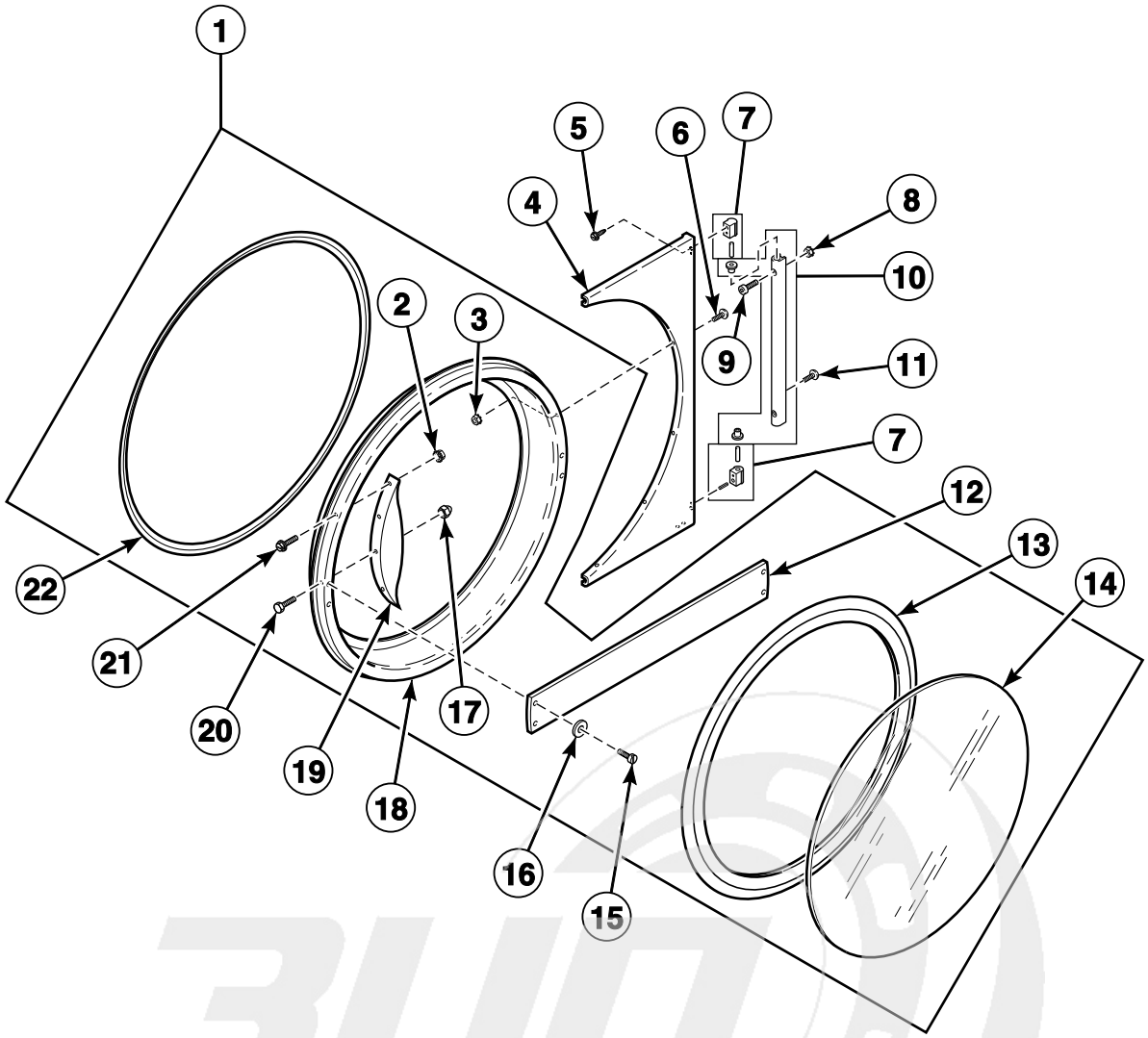

TMB2631P_70409201

info@zipnasklade.ru
8(800)500-69-51

© Copyright, Alliance Laundry Systems LLC – DO NOT COPY or TRANSMIT

Door and Hinge Components (Drawing 1 of 2)

REF	PART NO.	DESCRIPTION	COMMENTS
	M4221P4	Door Glass Installation Tool	
1	70212300	Door Assembly	S and U models; Excludes hinge
	44058001P	Door Assembly	H models; Excludes hinge
	70176503	Door Assembly	L models; Excludes hinge
	70212200	Door Assembly	A, N, P and Y models; GT and GU models through Serial No. 0110002231; Excludes hinge
	44046701	Door Assembly	C, D and I models; Excludes hinge
	70408901	Door Assembly	G models starting Serial No. 0707008006; K models; Excludes hinge
2	44071201	Nut	H, S and U models; 4 required
3	23951	Nut	6 required
4	70115903B	Door Hinge	G models starting Serial No. 0707008006; K models; black
	70115901*	Door Hinge	All other models
	70115902	Door Hinge	All other models; Stainless steel
5	61199	Screw	3 required, 2 in top cam and 1 in bottom cam
6	M400044	Screw	6 required
7	70436202	Door Hinge Cam Assembly	G models starting Serial No. 0707008006; K models
	M4772P3	Cam and Hinge Kit	All other models
8	29786	Nut	2 required
9	70409801	Screw	G models starting Serial No. 0707008006; K models; 2 required
	70033504	Screw	All other models; 2 required
10	44035002	Door Hinge Lug Assembly	G models starting Serial No. 0707008006; K models; Includes bushings
	44035001	Door Hinge Lug Assembly	All other models; Includes bushings
11	44023301	Screw	4 required
12	70399502B	Handle Bar	G models starting Serial No. 0707008006; K models
13	70211901P	Door Glass Seal Kit	
14	70133601P	Door Glass	H models
	M400784P	Door Glass	All other models
15	70126301	Pop Rivet	G models starting Serial No. 0707008006; K models; 4 required
16	70409301	Washer	G models starting Serial No. 0707008006; K models; 2 required
17	M414215	Nut	
18	44043501	Door Ring and Handle Assembly	C, D and I models; Includes straight-edged door handle
	70081801	Door Ring	H, S and U models
	70082001	Door Ring	A, N, P and Y models; GT and GU models through Serial No. 0110002231
	70399701B	Door Ring	G models starting Serial No. 0707008006; K models; Includes straight-edged door handle
19	430117	Door Handle	L models
	44057701	Door Handle	H models; Order 70133501P Replacement Door Handle Kit
	44007902P	Door Handle	S and U models
	M400133	Door Handle	A, N, P and Y models; GT and GU models through Serial No. 0110002231
20	M400661	Screw	Door strike
21	61199	Screw	All models except C, D, I and L models
	430756	Screw	L models; 2 required
	M402585	Screw	L models; 1 required
	M409385	Screw	A and P models; GT and GU models through Serial No. 0110002231; 2 required
22	70296801	Door Ring Gasket	Notched

*** Add Letter To Designate Color. L - Almond Q - Bisque W - White**

info@zipnaskade.ru
8(800)500-59-51

© Copyright, Alliance Laundry Systems LLC – DO NOT COPY or TRANSMIT

Door and Hinge Components (Drawing 2 of 2)

A, H, N, S and U Models Starting Serial No. 0308001308; D and I Models Starting Serial No. 0704000046;
G and K Models Starting Serial No. 0709000027

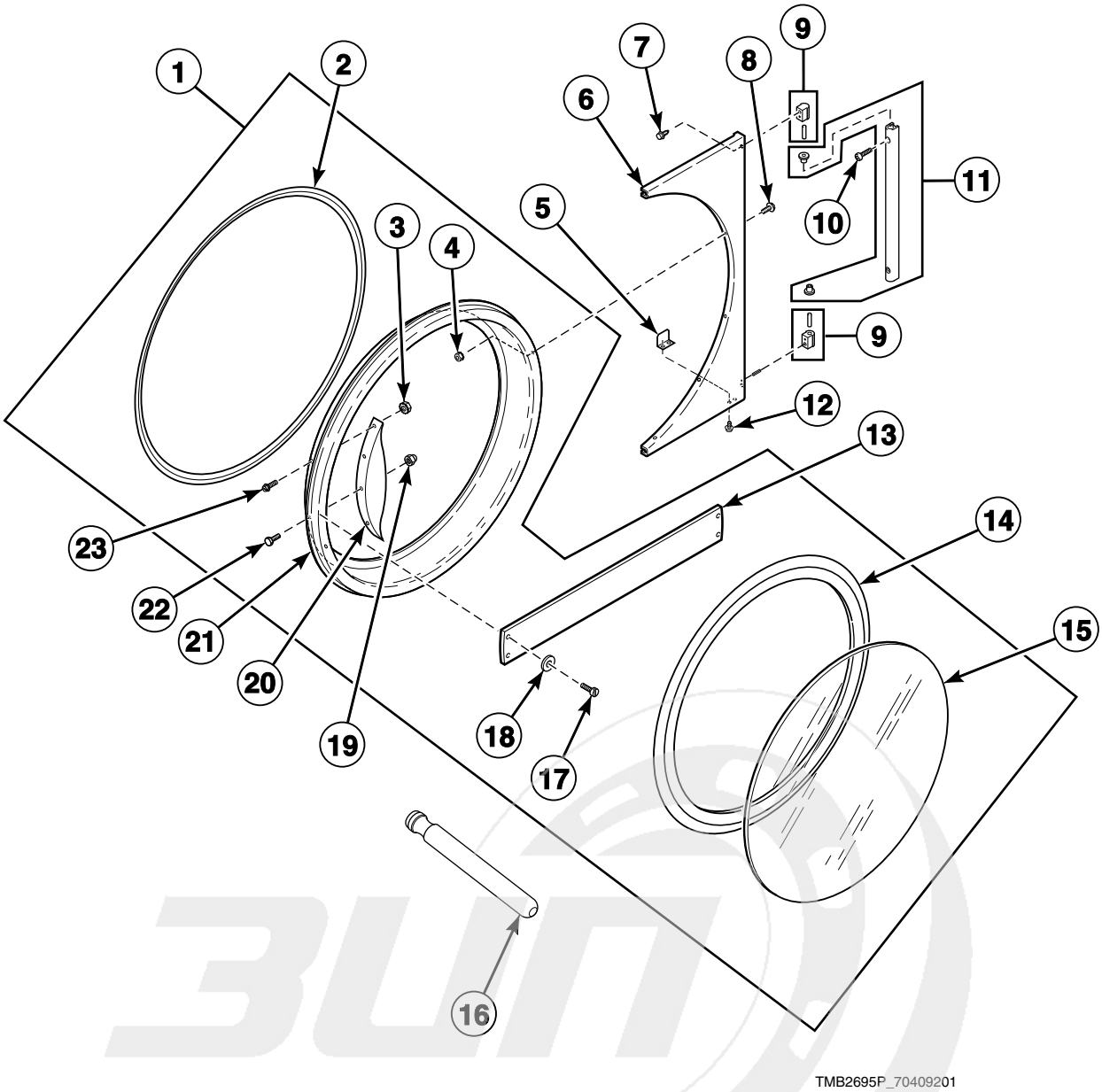

info@zipnasklade.ru
8(800)500-69-51

© Copyright, Alliance Laundry Systems LLC – DO NOT COPY or TRANSMIT

Door and Hinge Components (Drawing 2 of 2)

REF	PART NO.	DESCRIPTION	COMMENTS
1	44086801P	Door Assembly	N models
	44058102P	Door Assembly	H models
	44028902P	Door Assembly	S and U models
	N/A	Door Assembly	A models
	44112101	Door Assembly	D and I models
	70407401	Door Assembly	G and K models
2	44008201P	Door Ring Gasket	
3	44071201	Nut	H, S and U models; 4 required
4	23951	Nut	6 required
5	70215001P	Door Switch Actuator Kit	
6	44075208B	Door Hinge Assembly	G and K models
	44075203*	Door Hinge Assembly	All other models
	44075204	Door Hinge Assembly	All other models; Stainless steel
7	61199	Screw	3 required
8	M400044	Screw	6 required
9	44035102	Door Hinge Cam Assembly	G and K models; Upper
	70436202	Door Hinge Cam Assembly	G and K models
	M4772P3	Cam and Hinge Kit	All other models
10	70409801	Screw	G and K models; 2 required
	70033502	Screw	All other models; 2 required
11	44035002	Door Hinge Lug Assembly	G and K models
	44035001	Door Hinge Lug Assembly	All other models; Includes bushings
12	70058501	Pop Rivet	2 required
13	70399501B	Handle Bar	G and K models
14	70211902P	Door Seal Kit	
15	44008402P	Door Glass	H models
	44008401P	Door Glass	All other models
16	M4221P4	Door Glass Installation Tool	
17	70126301	Pop Rivet	G and K models; 4 required
18	70409301	Washer	G and K models; 2 required
19	M414215	Nut	
20	44057702	Door Handle	H and N models
	44007901	Door Handle	S and U models
	M400133	Door Handle	A models
21	44112001	Door Ring and Handle Assembly	D and I models
	44007703B	Door Ring	G and K models
22	M400661	Screw	Door strike
23	61199	Screw	H, N, S and U models; 4 required
	M409385	Screw	A models; 2 required

*** Add Letter To Designate Color. L - Almond Q - Bisque W - White**

N/A = Part no longer available

info@zipnasklade.ru
8(800)500-69-51

© Copyright, Alliance Laundry Systems LLC – DO NOT COPY or TRANSMIT

Cylinder and Trunnion Components

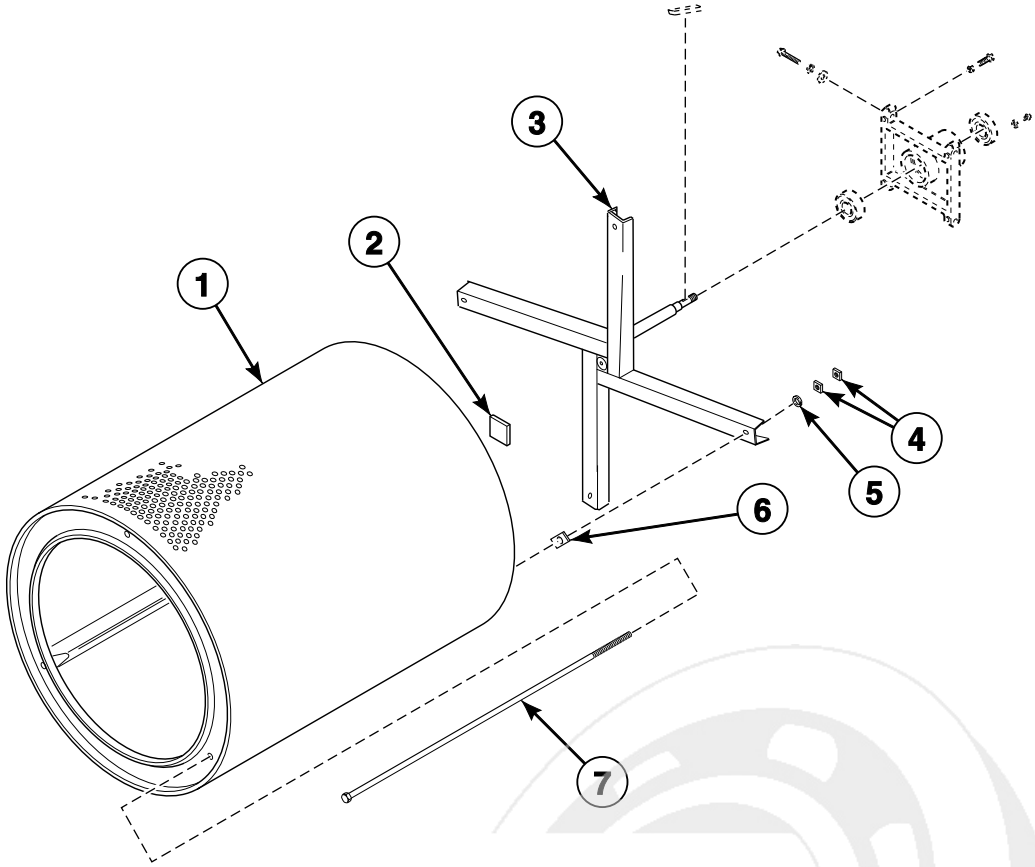

TMB2123P_70409201

info@zipnasklade.ru
8(800)500-69-51

© Copyright, Alliance Laundry Systems LLC – DO NOT COPY or TRANSMIT

Cylinder and Trunnion Components

REF	PART NO.	DESCRIPTION	COMMENTS
1	M401985P	Cylinder	Galvanized; A, H, S and U models through Serial No. 0308001307; C, D, I, L and P models; GT and GU models through Serial No. 0110002231
	M402517P	Cylinder	Stainless steel; A, H, S and U models through Serial No. 0308001307; C, D, I, L and P models; GT and GU models through Serial No. 0110002231
	44057201P	Cylinder Kit	Galvanized; A, H, N, S and U models starting Serial No. 0308001308
	44057301P	Cylinder Kit	Stainless steel; A, H, N, S and U models starting Serial No. 0308001308
	44079901P	Cylinder Assembly	Stainless steel; U models with the 11th character of R; Requires 82 of 70058501 Pop Rivet
	44130702	Cylinder Assembly	G models starting Serial No. 0707008006; K models
2	M402144	Felt Pad	
3	M413833P	Trunnion Assembly	Spider; Nonreversing; Includes nut; Models through Serial No. 030101089
	M413834P	Trunnion Kit	Spider; Reversing; Models through Serial No. 0308001307
	44036801P	Trunnion Assembly	Spider; Nonreversing; Includes nuts; Models starting Serial No. 0301001090 through 0308001307
	44261801	Trunnion Kit	Spider; Nonreversing; Models starting Serial No. 0308001308
	M413836	Trunnion Assembly	Spider; Reversing; Models starting Serial No. 0308001308
4	M404993	Nut	Reversing; 1 required per rod
5	91200	Washer	Reversing and nonreversing
6	M401402	Spacer	Adjustment between cylinder and trunnion
7	M404992	Rib Rod	

NOTE: Assemblies and kits are listed in *Cylinder, Trunnion and Bearing Assemblies and Kits* section.

info@zipnasklade.ru
8(800)500-69-51

© Copyright, Alliance Laundry Systems LLC – DO NOT COPY or TRANSMIT

Trunnion Housing Components

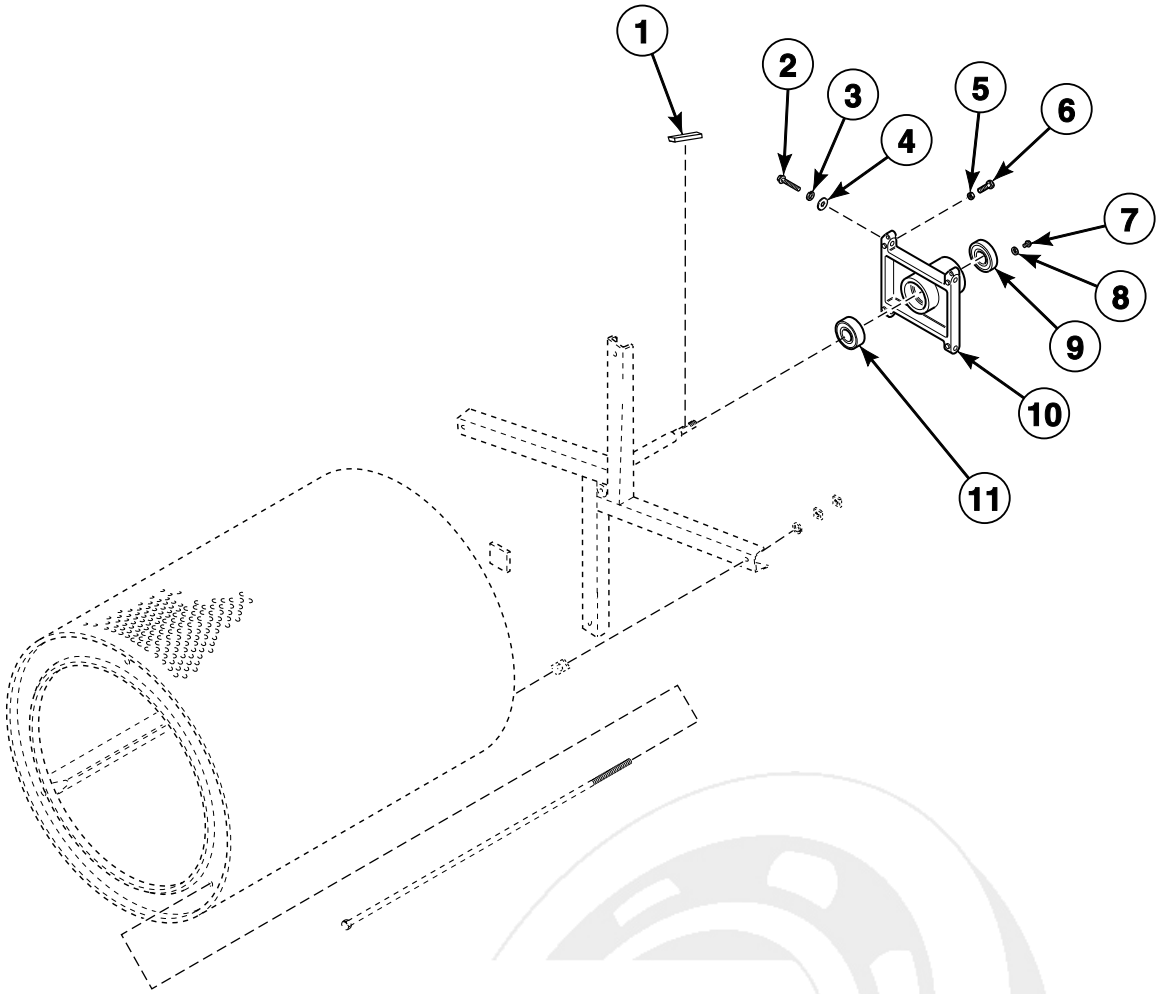

TMB2123PA_70409201

info@zipnasklade.ru
8(800)500-69-51

© Copyright, Alliance Laundry Systems LLC – DO NOT COPY or TRANSMIT

Trunnion Housing Components

REF	PART NO.	DESCRIPTION	COMMENTS
1	M400008	Key	Half moon; Nonreversing
	M405232	Key	Straight; Reversing
2	M400063	Screw	4 required
3	91200	Washer	4 required
4	70261401	Washer	4 required
5	M400026	Nut	4 required
6	M400650	Bolt	2 required
7	70187201	Screw	4 required
8	20103	Washer	4 required
9	F100136P	Bearing	
10	M413826	Trunnion Housing	
11	44041901P	Ball Bearing	

info@zipnasklade.ru
8(800)500-69-51

© Copyright, Alliance Laundry Systems LLC – DO NOT COPY or TRANSMIT

Cylinder, Trunnion and Bearing Assemblies and Kits

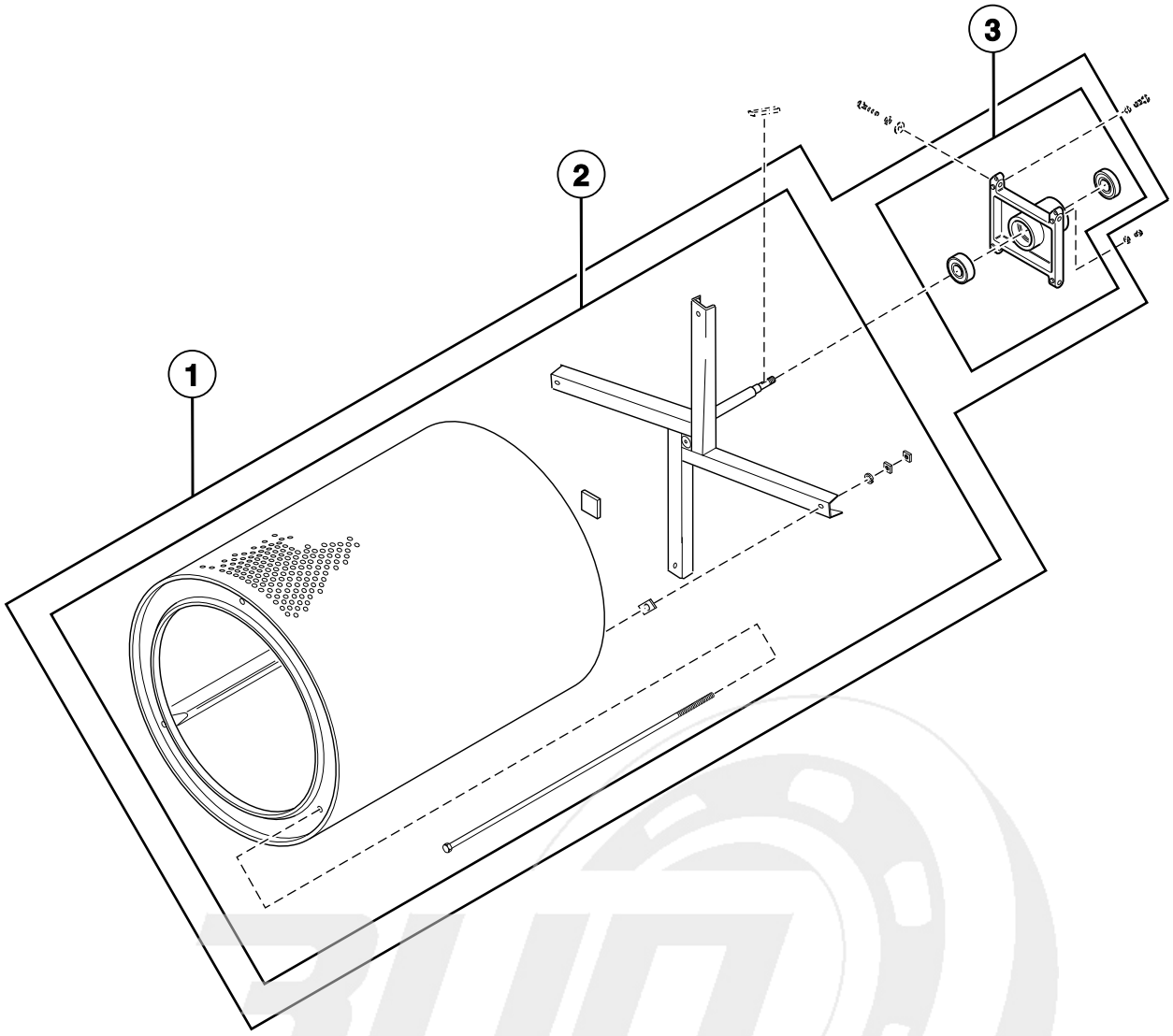

TMB2122PC_70409201

info@zipnasklade.ru
8(800)500-69-51

© Copyright, Alliance Laundry Systems LLC – DO NOT COPY or TRANSMIT

Cylinder, Trunnion and Bearing Assemblies and Kits

REF	PART NO.	DESCRIPTION	COMMENTS
	M4640P3	Trunnion and Bearing Assembly	Nonreversing
	M4641P3	Trunnion and Bearing Assembly	Reversing
	M4644P3	Housing and Trunnion Assembly	Nonreversing; Includes bearing
	M4645P3	Housing and Trunnion Assembly	Reversing; Includes bearing
1	M4818P3	Cylinder, Trunnion and Bearing Housing Kit	Nonreversing; C, D and I models
2	M406906P	Cylinder and Trunnion Assembly	Galvanized; Nonreversing; A, H, S and U models through Serial No. 0308001307; C, L, N and P models; D and I models through Serial No. 0703023529; GT and GU models through Serial No. 0110002231
	M409015P	Cylinder and Trunnion Assembly	Stainless steel; Nonreversing; A, H, S and U models through Serial No. 0308001307; C, L, N and P models; D and I models through Serial No. 0703023529; GT and GU models through Serial No. 0110002231
	M409090P	Cylinder and Trunnion Assembly	Galvanized; Reversing; A, H, S and U models through Serial No. 0308001307; C, L, N and P models; D and I models through Serial No. 0703023529; GT and GU models through Serial No. 0110002231
	M409091	Cylinder and Trunnion Assembly	Stainless steel; Reversing; A, H, S and U models through Serial No. 0308001307; C, L, N and P models; D and I models through Serial No. 0703023529; GT and GU models through Serial No. 0110002231
	44057501P	Cylinder and Trunnion Assembly	Galvanized; Nonreversing; A, H, S and U models starting Serial No. 0308001308; D and I models starting Serial No. 0704000046
	44057502	Cylinder and Trunnion Assembly	Stainless steel; Nonreversing; A, H, S and U models starting Serial No. 0308001308; D and I models starting Serial No. 0704000046
	44057503P	Cylinder and Trunnion Assembly	Galvanized; Reversing; A, H, S and U models starting Serial No. 0308001308; D and I models starting Serial No. 0704000046
	44057504P	Cylinder and Trunnion Assembly	Stainless steel; Reversing; A, H, S and U models starting Serial No. 0308001308; D and I models starting Serial No. 0704000046
	44080001	Cylinder and Trunnion Assembly	Stainless steel; Reversing; U models with the 11th character of R; With riveted cylinder
	44131001	Cylinder and Trunnion Assembly	Reversing; G models starting Serial No. 0707008006; K models through Serial No. 0708020563
	44131101	Cylinder and Trunnion Assembly	Nonreversing; G models starting Serial No. 0707008006; K models through Serial No. 0708020563
	44131302	Cylinder and Trunnion Assembly	Reversing; G and K models starting Serial No. 0709000027
	44131402	Cylinder and Trunnion Assembly	Nonreversing; G and K models starting Serial No. 0709000027
3	M413832	Trunnion Housing Assembly	Includes bearing

NOTE: Individual components are listed in *Cylinder and Trunnion Components* section.

info@zipnasklade.ru
8(800)500-69-51

© Copyright, Alliance Laundry Systems LLC – DO NOT COPY or TRANSMIT

Reversing Cylinder Drive Motor and Components

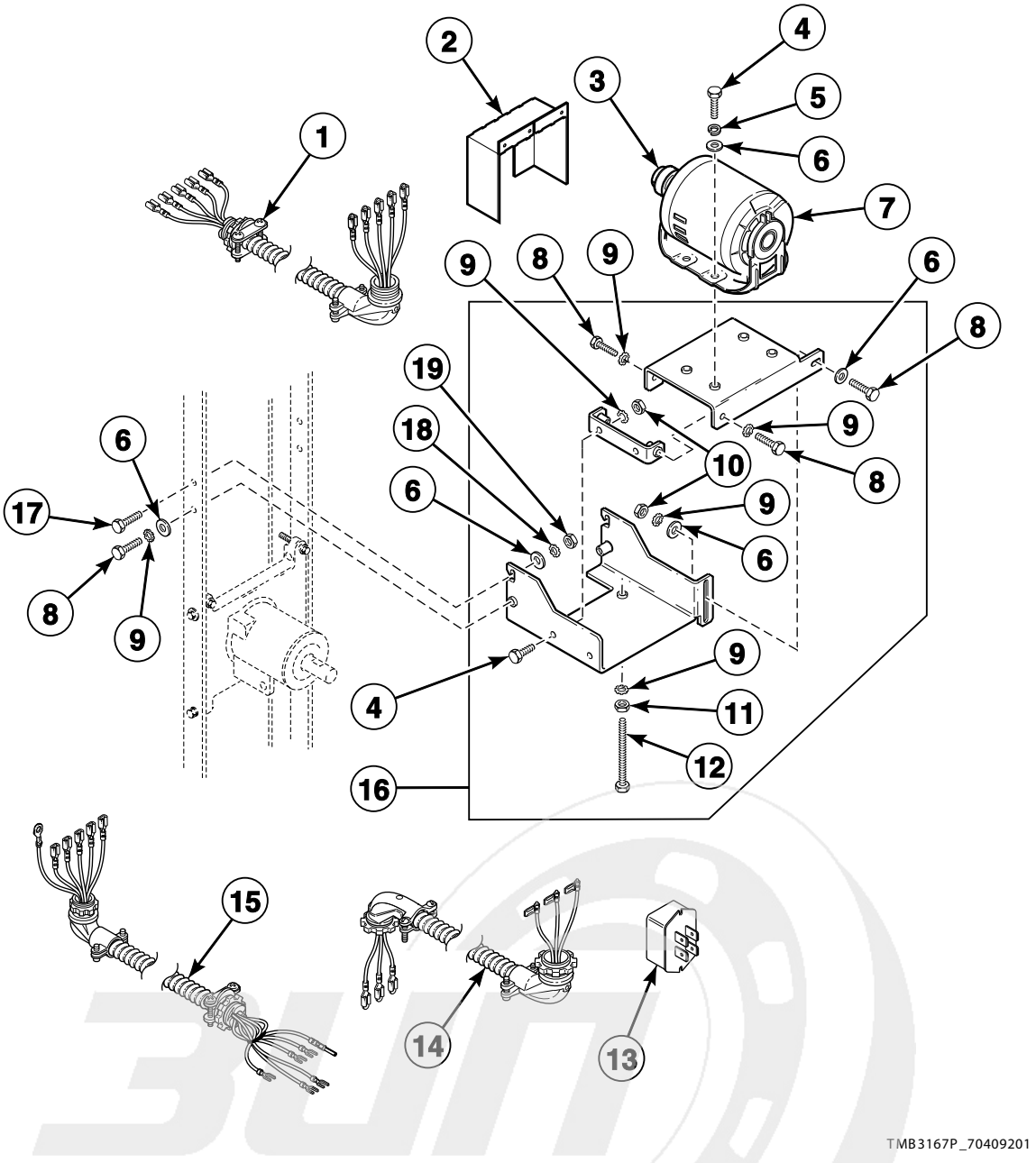

info@zipnasklade.ru
8(800)500-69-51

© Copyright, Alliance Laundry Systems LLC – DO NOT COPY or TRANSMIT

Reversing Cylinder Drive Motor and Components

REF	PART NO.	DESCRIPTION	COMMENTS
1	M413687	Cylinder Motor Harness Assembly	Non-CE models; 1 Phase
2	M413541	Belt Guard	Upper
3	M414565	Pulley	60 Hertz
	M414567	Pulley	50 Hertz
4	M400057	Screw	6 required
5	M400013	Washer	4 required
6	M400080	Washer	8 required
7	M412519P	Motor Kit	Gas and steam models with: 200-208 or 240 Volt/60 Hertz/3 Phase, 460-480 Volt/60 Hertz/3 Phase, 200 Volt/50 Hertz/3 Phase, 230 or 240 Volt/50 Hertz/3 Phase and 380 or 400-415 Volt/50 Hertz/3 Phase; Electric models with: 200-208 Volt/60 Hertz/3 Phase, 240 Volt/50 or 60 Hertz/3 Phase, 480 Volt/60 Hertz/3 Phase, 200 Volt/50 Hertz/3 Phase, 380 Volt/50 Hertz/3 Phase and 400-415/50 Hertz/3 Phase
	M412520P	Motor Kit	Gas and steam models with: 230-240 Volt/50 Hertz/1 Phase
8	M400056	Screw	5 required
9	02834	Washer	8 required
10	70142	Nut	3 required
11	02428	Nut	
12	M413565	Screw	
13	M414563	Motor Switch	1 Phase
14	M413688	Cylinder Motor Harness Assembly	Non-CE models; 3 Phase
15	M412745	Cylinder Motor Harness	CE models; 1 Phase
	M412573	Cylinder Motor Harness Assembly	CE models; 3 Phase
16	M413617	Motor Mount Assembly	Includes items 4, 6, 8-12, 18 and 19
17	22688	Screw	2 required
18	M403958	Washer	2 required
19	20274	Nut	2 required

info@zipnasklade.ru
8(800)500-69-51

© Copyright, Alliance Laundry Systems LLC – DO NOT COPY or TRANSMIT

Drive Components for Reversing Models

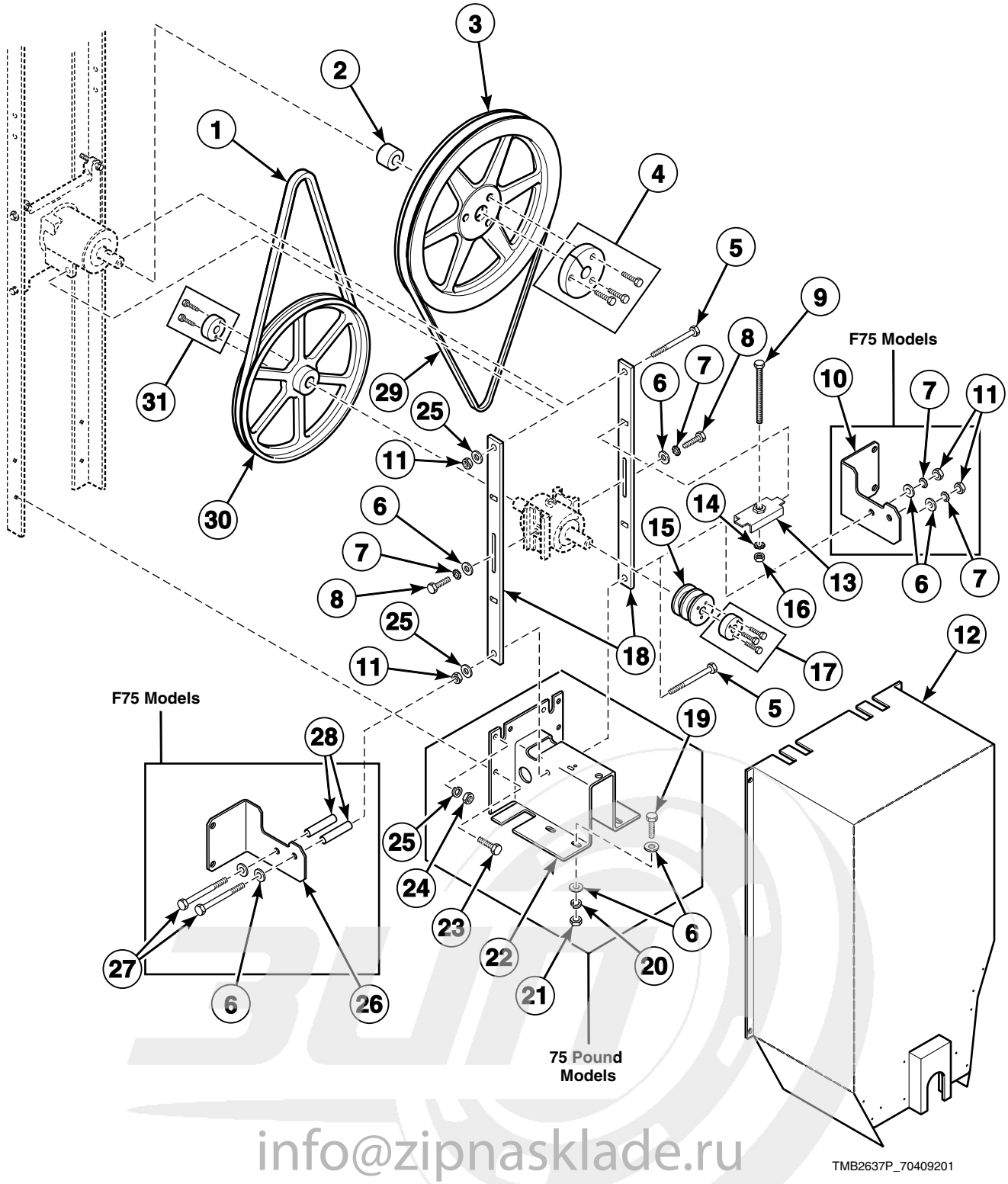

info@zipnasklade.ru
8(800)500-69-51

© Copyright, Alliance Laundry Systems LLC – DO NOT COPY or TRANSMIT

Drive Components for Reversing Models

REF	PART NO.	DESCRIPTION	COMMENTS
1	M412981	Belt	Drive
2	44024001	Spacer	
3	M412916	Double V Sheave	
4	M412086P	Bushing	Includes M400013 Washer, 44048902 Screw and 44079203 Screw
5	M400061	Screw	
6	M400080	Washer	
7	M403958	Washer	
8	M400043	Screw	
9	M412627	Screw	
10	M413268	Guide Rail Support	STF and UTF models; Right
11	M400026	Nut	STF and UTF models; 2 required
12	44132407	Belt Guard Assembly	STF and UTF models
	44132404	Belt Guard Assembly	All other models
13	M414405	Tension Plate Assembly	
14	M412188	Washer	
15	M412884	Pulley	
16	H88412101	Nut	
17	M412917P	Bushing	Includes 56552 Washer, 44048901 Screw and 44079301 Screw
18	M412476	Guide Rail	
19	M400057	Screw	All models except STF and UTF models
20	M400013	Washer	All models except STF and UTF models; 4 required
21	02428	Nut	All models except STF and UTF models; 4 required
22	M411483	Motor Bracket	All models except STF and UTF models; Models through Serial No. 0707001384
	44117201	Motor Bracket	Models starting Serial No. 0707001385
23	M401393	Bolt	All models except STF and UTF models; 2 required
24	20274	Nut	All models except STF and UTF models
25	M400014	Washer	
26	M413267	Guide Rail Support	STF and UTF models; Left
27	M405525	Screw	STF and UTF models
28	M413269	Guide Rail Spacer	STF and UTF models
29	M412090	Belt	2 required; Cylinder
30	M412931	Single V Sheave	
31	M412885P	Bushing	Includes 03189 Washer and 44079201Screw

info@zipnasklade.ru
8(800)500-69-51

© Copyright, Alliance Laundry Systems LLC – DO NOT COPY or TRANSMIT

Drive Components for Nonreversing Models

All Models Except STF75L, STF75N, UB075E, UTF75L and UTF75N

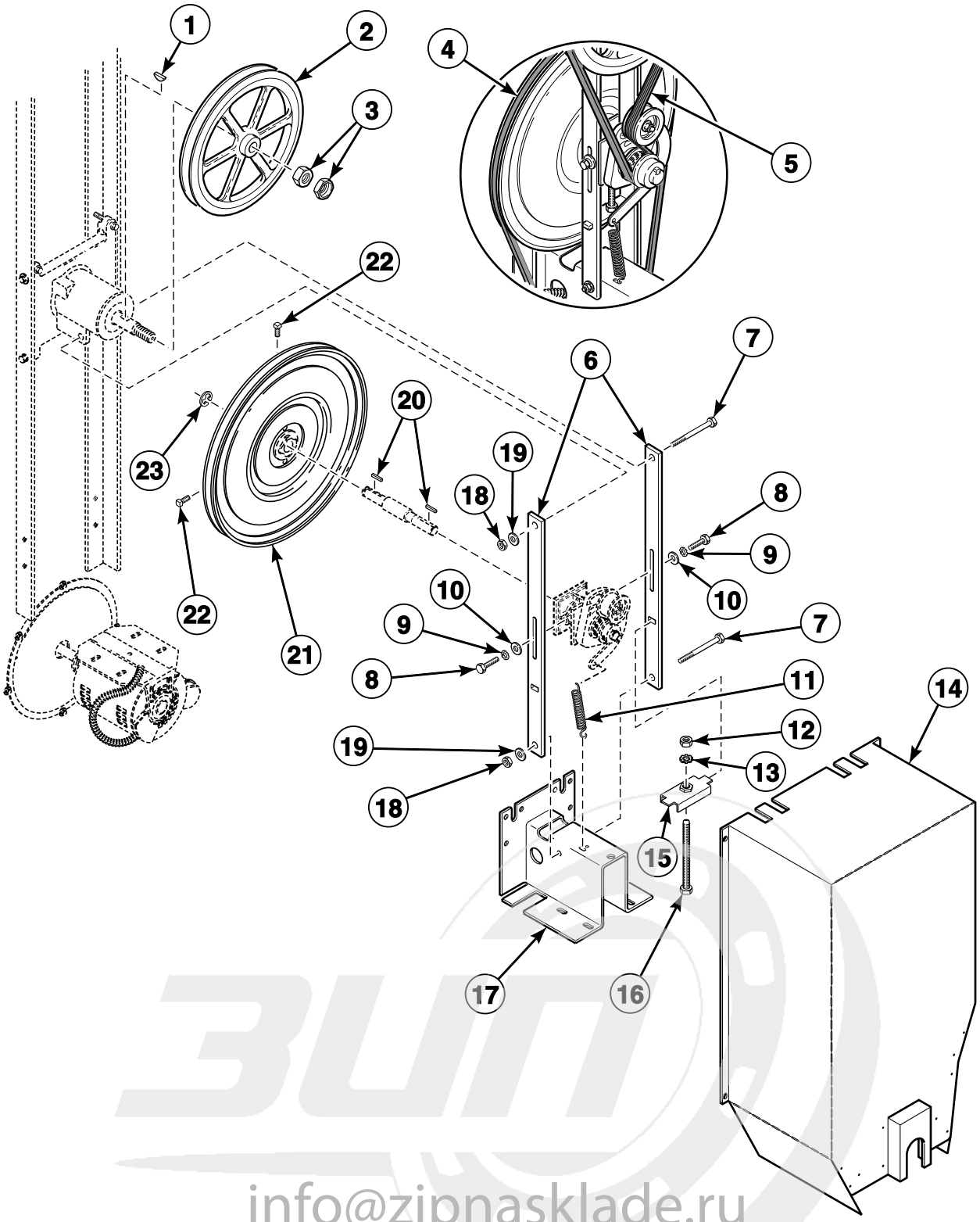

TMB2560P_70409201

info@zipnasklade.ru
8(800)500-69-51

© Copyright, Alliance Laundry Systems LLC – DO NOT COPY or TRANSMIT

Drive Components for Nonreversing Models

REF	PART NO.	DESCRIPTION	COMMENTS
1	M400008	Key	
2	M412156	Micro V Sheave	
3	M400035	Nut	
4	M401182P	Belt	
5	M411425P	Micro V Belt	
6	M412476	Guide Rail	
7	M400061	Screw	
8	M400043	Screw	
9	M403958	Washer	
10	M400080	Washer	
11	M412120	Extension Spring	
12	H88412101	Nut	
13	M412188	Washer	
14	44132405	Belt Guard Assembly	
15	M414405	Tension Plate Assembly	
16	M412627	Screw	
17	M411483	Motor Bracket	Models through Serial No. 0707001384
	44117201	Motor Bracket	Models starting Serial No. 0707001385
18	M400026	Nut	
19	M400014	Washer	
20	M401327	Key	
21	44086901P	Sheave Kit	Includes item 20 and 2 of item 22
22	M400065	Screw	
23	M400399	Ring	

NOTE: On nonreversing models, there is only one motor that functions as the drive motor and fan motor. Refer to *Fan Motors* section for motor part numbers.

info@zipnasklade.ru
8(800)500-69-51

© Copyright, Alliance Laundry Systems LLC – DO NOT COPY or TRANSMIT

Idler Housing Assembly for Reversing Models

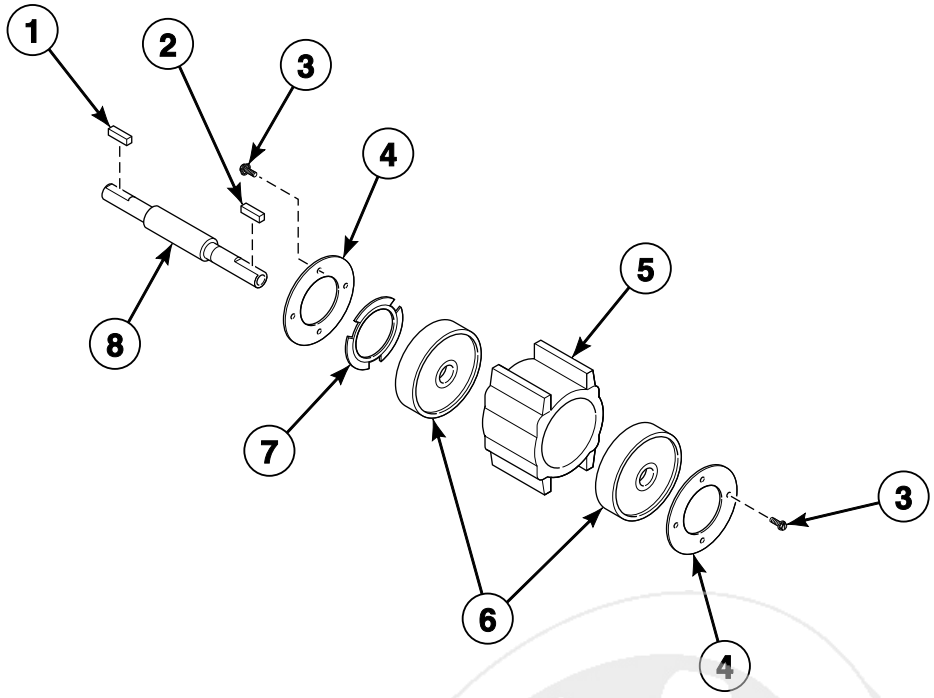

TMB2160P_70409201

info@zipnasklade.ru
8(800)500-69-51

© Copyright, Alliance Laundry Systems LLC – DO NOT COPY or TRANSMIT

Idler Housing Assembly for Reversing Models

REF	PART NO.	DESCRIPTION	COMMENTS
	917P3	Idler Housing Kit	Includes items 1-4, 7 and M412476 Guide Rail, M412630 Idler Housing Assembly and 614P3 Idler Assembly Components Kit
1	M401327	Key	
2	M400993	Key	
3	70187201	Screw	8 required
4	M401370	Bearing Retainer	
5	M412612	Idler Housing	
6	M401375P	Ball Bearing	
7	M400401	Loading Spring	
8	M414241	Idler Shaft	

info@zipnasklade.ru
8(800)500-69-51

© Copyright, Alliance Laundry Systems LLC – DO NOT COPY or TRANSMIT

Idler Housing Assembly for Nonreversing Models

All Models Except STF75L, STF75N, UB075E, UTF75L and UTF75N
Models Through 12/3/07

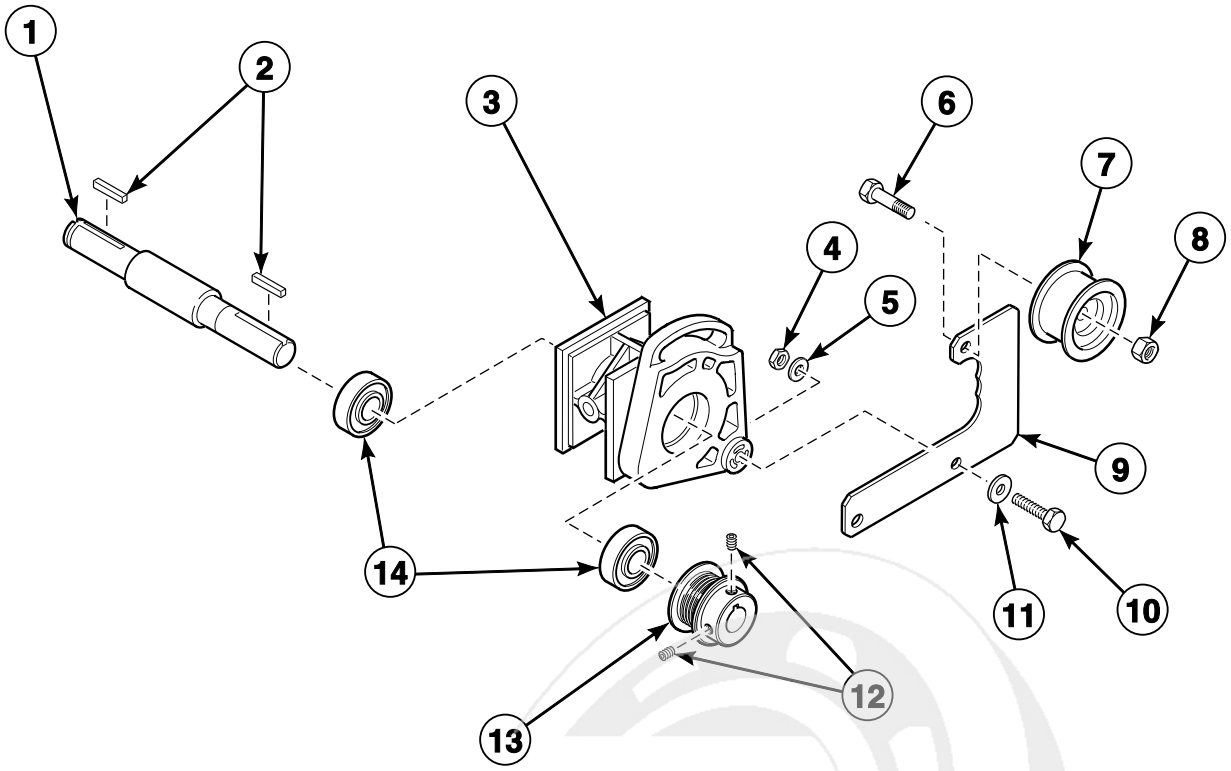

TMB1530P_70409201

info@zipnasklade.ru
8(800)500-69-51

© Copyright, Alliance Laundry Systems LLC – DO NOT COPY or TRANSMIT

Idler Housing Assembly for Nonreversing Models

REF	PART NO.	DESCRIPTION	COMMENTS
1	M412223P	Idler Shaft	
2	M401327	Key	2 required
3	943P3P	Idler Housing Kit	Idler with shaft
4	52566	Nut	
5	M405535	Washer	
6	430648	Screw	
7	430619	Drum Idler Wheel Assembly	
8	56156	Nut	
9	M414320P	Idler Arm Kit	Includes item 11 and 2 of 70187001 Washer
10	M412119	Bolt	
11	430782	Washer	
12	M400077	Screw	
13	M411466P	Micro V Pulley	
14	70448701	Support Bearing	

info@zipnasklade.ru
8(800)500-69-51

© Copyright, Alliance Laundry Systems LLC – DO NOT COPY or TRANSMIT

Idler Assembly for Nonreversing Models

All Models Except STF75L, STF75N, UB075E, UTF75L and UTF75N
Models Starting 12/4/07

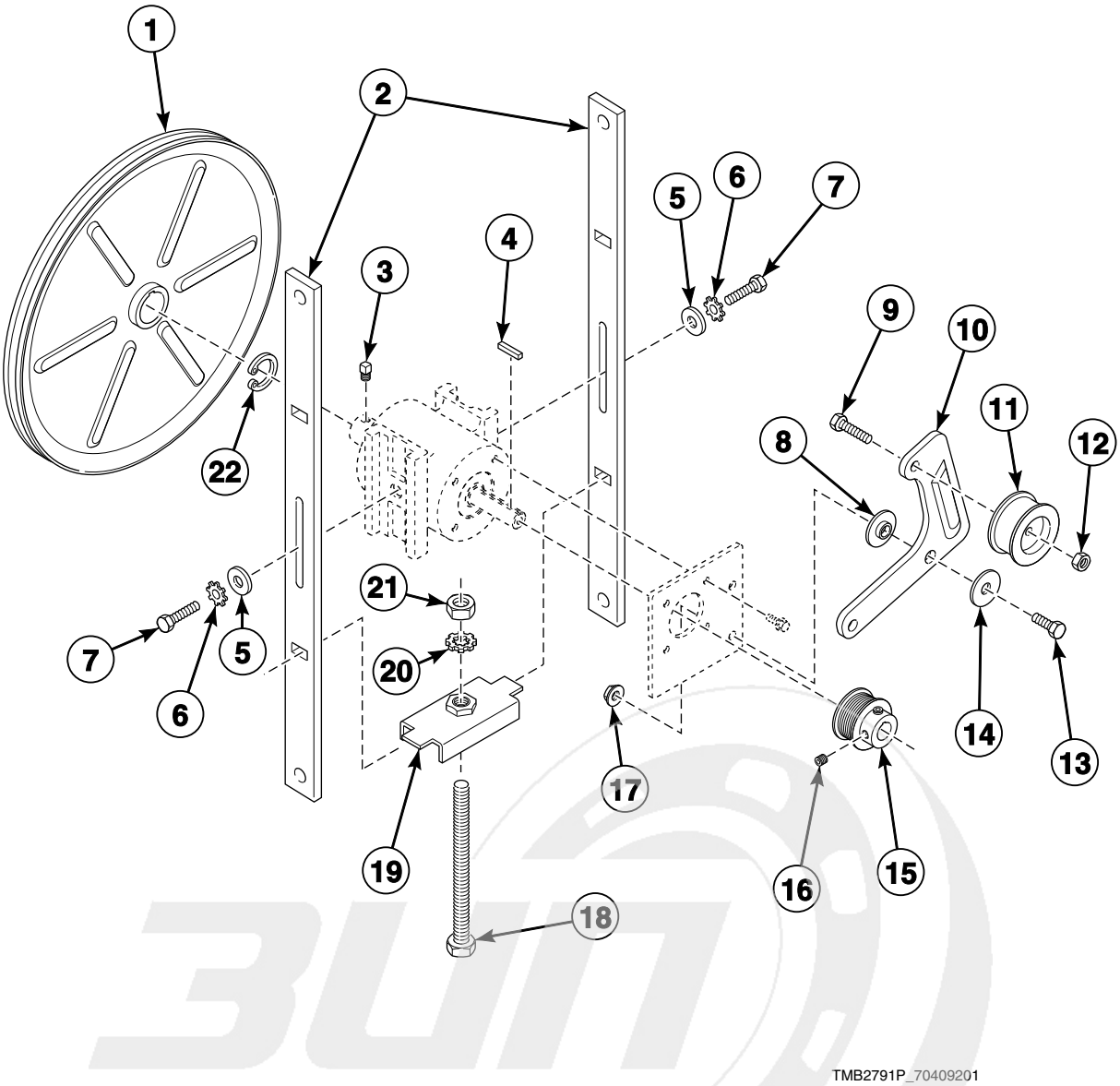

info@zipnasklade.ru
8(800)500-69-51

© Copyright, Alliance Laundry Systems LLC – DO NOT COPY or TRANSMIT

Idler Assembly for Nonreversing Models

REF	PART NO.	DESCRIPTION	COMMENTS
	942P3P	Idler/Belt Assembly Kit	Use to replace whole assembly
	943P3P	Idler Housing Kit	
1	44086901P	Sheave Kit	Includes hardware
2	M412476	Guide Rail	2 required
3	M400065	Screw	2 required
4	M401327	Key	2 required
5	M400080	Washer	2 required
6	M403958	Washer	2 required
7	M400043	Screw	2 required
8	70265901	Washer	
9	430648	Screw	
10	M414320P	Idler Arm Kit	Models through 12/12/07
	44102701	Idler Arm	Models starting 12/12/07
11	430619	Drum Idler Wheel Assembly	
12	56156	Nut	
13	M400056	Screw	
14	70270301	Washer	
15	M411466P	Micro V Pulley	
16	M400077	Screw	2 required
17	44087201	Nut	
18	M412627	Screw	
19	M414405	Tension Plate Assembly	
20	M412188	Washer	
21	H88412101	Nut	
22	M400399	Ring	

info@zipnasklade.ru
8(800)500-69-51

© Copyright, Alliance Laundry Systems LLC – DO NOT COPY or TRANSMIT

Fan Components

All Models Except STF75L, STF75N, UB075E, UTF75L and UTF75N

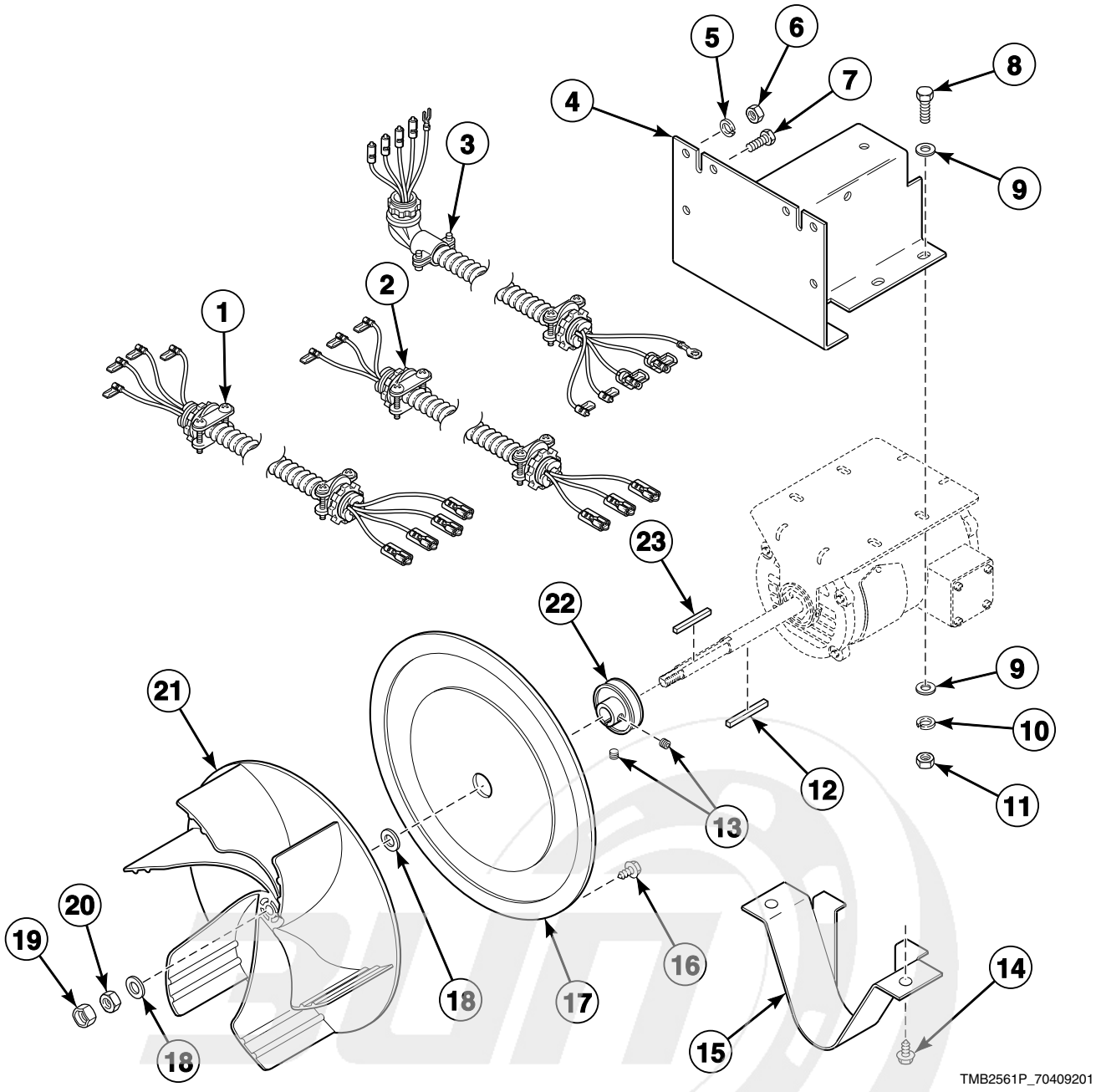

info@zipnasklade.ru
8(800)500-69-51

© Copyright, Alliance Laundry Systems LLC – DO NOT COPY or TRANSMIT

Fan Components

REF	PART NO.	DESCRIPTION	COMMENTS
	M4426P3	Motor Hardware Kit	Includes items 12, 18-20 and 23
	M4525P3P	Resilient Ring Kit	2 per package
1	44006101P	Fan Motor Harness	Non-CE models; 120 Volt/60 Hertz/1 Phase and 230 or 240 Volt/50 Hertz/1 Phase
	44006201P	Fan Motor Harness	Non-CE gas and steam models 208-240 Volt/60 Hertz/1 Phase; Non-CE electric models 200-208 Volt/60 Hertz/3 Phase, 240 Volt/ 60 Hertz/3 Phase and 240 Volt/50 Hertz/3 Phase
	44250101	Motor Harness	Use this harness with replacement motor 44242501; Gas and steam: 120 Volt/60 Hertz/1 Phase or 200-208 or 240 Volt/60 Hertz/1 Phase; Electric models: 200-208 Volt/60 Hertz/3 Phase or 240 Volt/60 Hertz/3 Phase
2	M413686	Fan Motor Harness Assembly	Non-CE gas and steam models 200 Volt/50 Hertz/3 Phase and 380 Volt/50 Hertz/3 Phase; Non-CE electric models 480 Volt/60 Hertz/3 Phase
3	M413281	Fan Motor Harness Assembly	CE models; 1 Phase
4	M411483	Motor Bracket	Models through Serial No. 0707001384
	44117201	Motor Bracket	Models starting Serial No. 0707001385
5	M400014	Washer	
6	20274	Nut	
7	M401393	Bolt	2 required
8	M400057	Screw	
9	M400080	Washer	
10	M400013	Washer	
11	02428	Nut	
12	44132301	Key	Nonreversing; 120 Volt/60 Hertz/1 Phase or 200-208 or 240 Volt/60 Hertz/1 Phase; Electric models 200-208 Volt/60 Hertz/3 Phase or 240 Volt/60 Hertz/3 Phase
	M400993	Key	All other voltages
13	M400077	Screw	Supplied with pulley
14	430497	Screw	
15	M413008	Belt Guard	
16	M410059	Screw	7 required
17	M401362	Cover Plate	
18	M400991	Washer	
19	M400034	Nut	
20	M400022	Nut	
21	M4936P3	Fan Kit	Includes key
22	M414564	Pulley	60 Hertz; Nonreversing
	M414566	Pulley	50 Hertz; Nonreversing
23	M400994P	Key and Instruction Kit	

info@zipnasklade.ru
8(800)500-69-51

© Copyright, Alliance Laundry Systems LLC – DO NOT COPY or TRANSMIT

Fan Motors

All Models Except STF75L, STF75N, UB075E, UTF75L and UTF75N

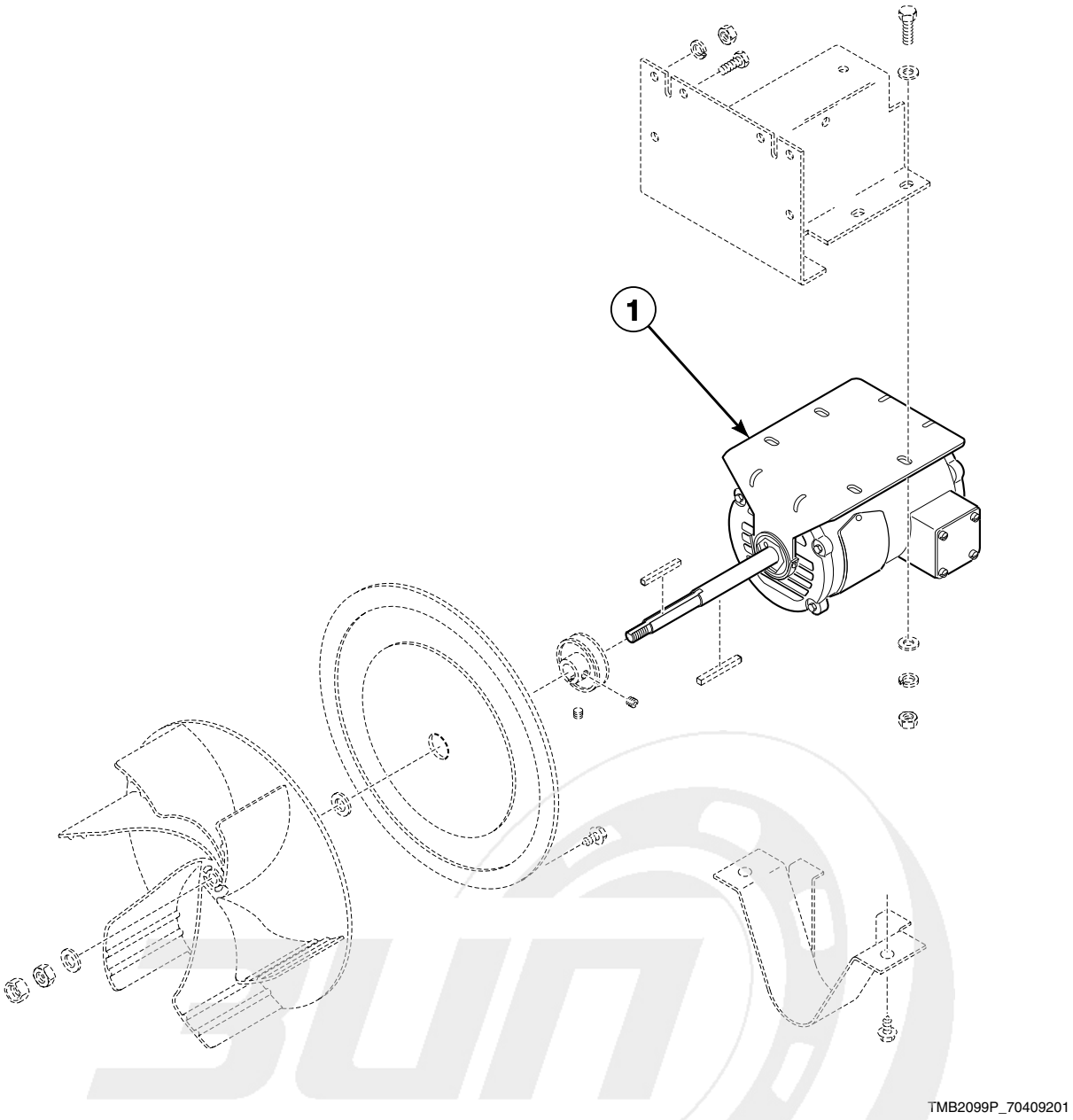

info@zipnasklade.ru
8(800)500-69-51

© Copyright, Alliance Laundry Systems LLC – DO NOT COPY or TRANSMIT

Fan Motors

REF	PART NO.	DESCRIPTION	COMMENTS
1	44245502	Motor Kit	Includes 44242501 Motor; Use M410298 Motor Capacitor; Nonreversing; Gas and steam models with: 120 Volt/60 Hertz/1 Phase and 200-208 or 240 Volt/60 Hertz/1 Phase; Electric models with: 200-208 Volt/60 Hertz/3 Phase and 240 Volt/60 Hertz/3 Phase
	44046201P	Motor	3/4 horsepower; Gas and steam nonreversing models with: 200-208 or 240 Volt/60 Hertz/3 Phase, 460-480 Volt/60 Hertz/3 Phase, 200 Volt/50 Hertz/3 Phase, 230-240 Volt/50 Hertz/3 Phase and 380 or 400-415 Volt/50 Hertz/3 Phase; Electric nonreversing models with: 480 Volt/60 Hertz/3 Phase, 200 Volt/50 Hertz/3 Phase, 380 Volt/50 Hertz/3 Phase and 400-415 Volt/50 Hertz/3 Phase; Gas and steam reversing models with: 200-208 or 240 Volt/60 Hertz/3 Phase and 460-480 Volt/60 Hertz/3 Phase
	44048801P	Motor	Use M410300 Motor Capacitor; Nonreversing; Gas and steam models with: 230-240 Volt/50 Hertz/1 Phase; Electric models with: 240 Volt/50 Hertz/3 Phase
	44046001P	Fan Motor	1/3 horsepower; Reversing; Gas and steam models with: 200 Volt/50 or 60 Hertz/3 Phase, 230-240 Volt/50 or 60 Hertz/3 Phase and 380 or 400-415 Volt/50 or 60 Hertz/3 Phase; Electric models with: 480 Volt/50 or 60 Hertz/3 Phase, 380 Volt/50 Hertz/3 Phase and 400-415 Volt/50 or 60 Hertz/3 Phase
	44045901P	Fan Motor	Use M410301 Motor Capacitor; Reversing; Gas and steam models with: 230-240 Volt/50 Hertz/1 Phase; Electric models with: 240 Volt/50 Hertz/1 or 3 Phase and 200 Volt/50 Hertz/3 Phase
	44045701P	Motor	Use M410296 Motor Capacitor; Reversing; Electric models with: 200-208 Volt/60 Hertz/3 Phase and 240 Volt/60 Hertz/3 Phase

NOTE: Nonreversing motors listed above function as the fan motor and the drive motor.

info@zipnasklade.ru
8(800)500-69-51

© Copyright, Alliance Laundry Systems LLC – DO NOT COPY or TRANSMIT

Fan Components and Motor for STF, UB and UTF Models

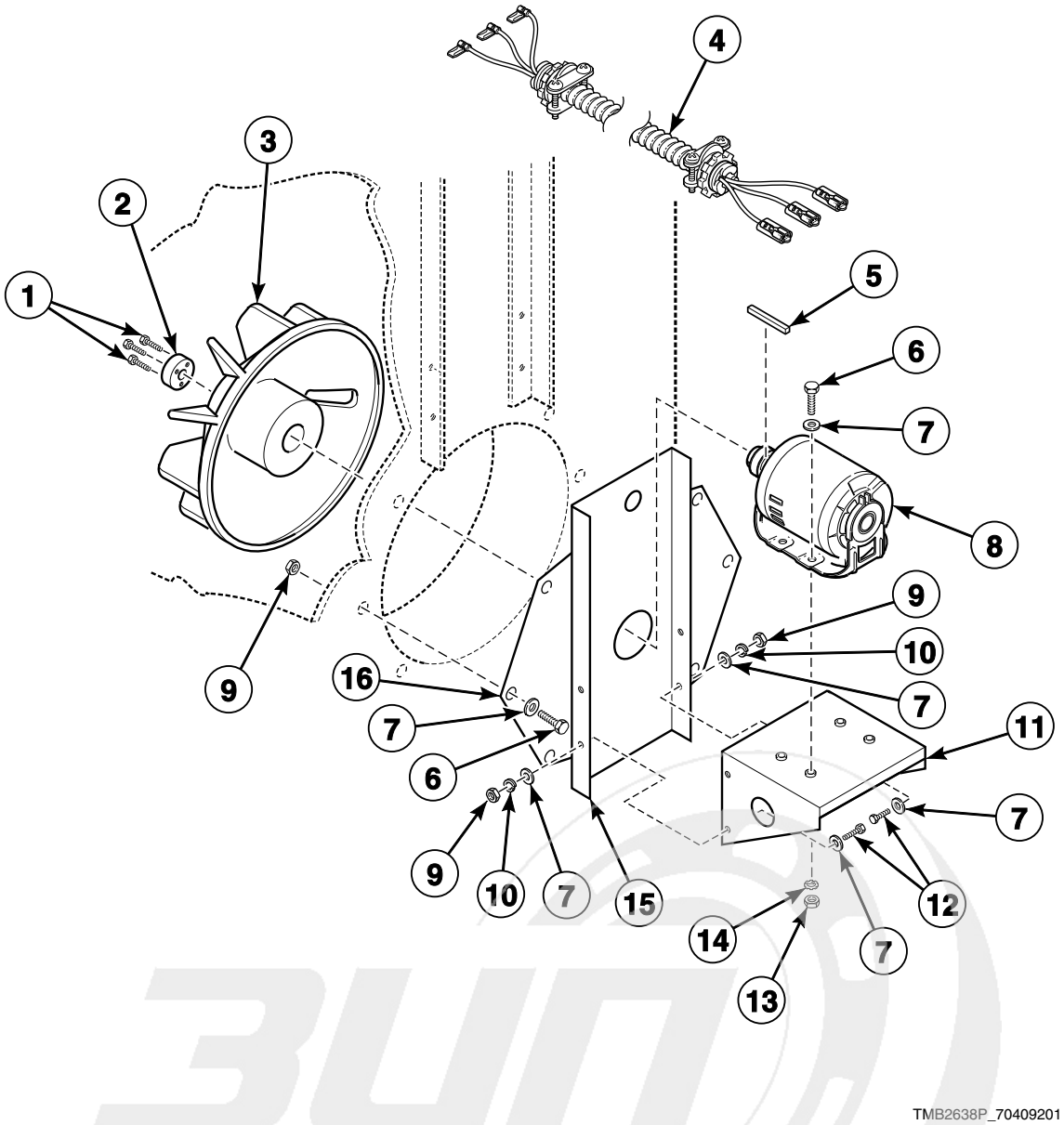

info@zipnasklade.ru
8(800)500-69-51

© Copyright, Alliance Laundry Systems LLC – DO NOT COPY or TRANSMIT

Fan Components and Motor for STF, UB and UTF Models

REF	PART NO.	DESCRIPTION	COMMENTS
1	H8800901H	Screw	
2	H87529111P	Bushing	
3	M414546	Fan and Bushing Assembly	
4	M413686	Fan Motor Harness Assembly	
5	H8752006H	Key	
6	M400057	Screw	
7	M400080	Washer	
8	44046301P	Motor	
9	20274	Nut	
10	M400014	Washer	4 required
11	M413391	Motor Base	
12	22688	Screw	4 required
13	02428	Nut	4 required
14	M400013	Washer	4 required
15	N/A	Motor Channel	
16	M413399	Blower Cover	

N/A = Part no longer available

info@zipnasklade.ru
8(800)500-69-51

© Copyright, Alliance Laundry Systems LLC – DO NOT COPY or TRANSMIT

Gas Heater Components for All Models Except STF and UTF Models (Drawing 1 of 2)

Non-CE and Non-Australian Models Through Serial No. 0208002194;
CE and Australian Models Starting Serial No. 0208002195

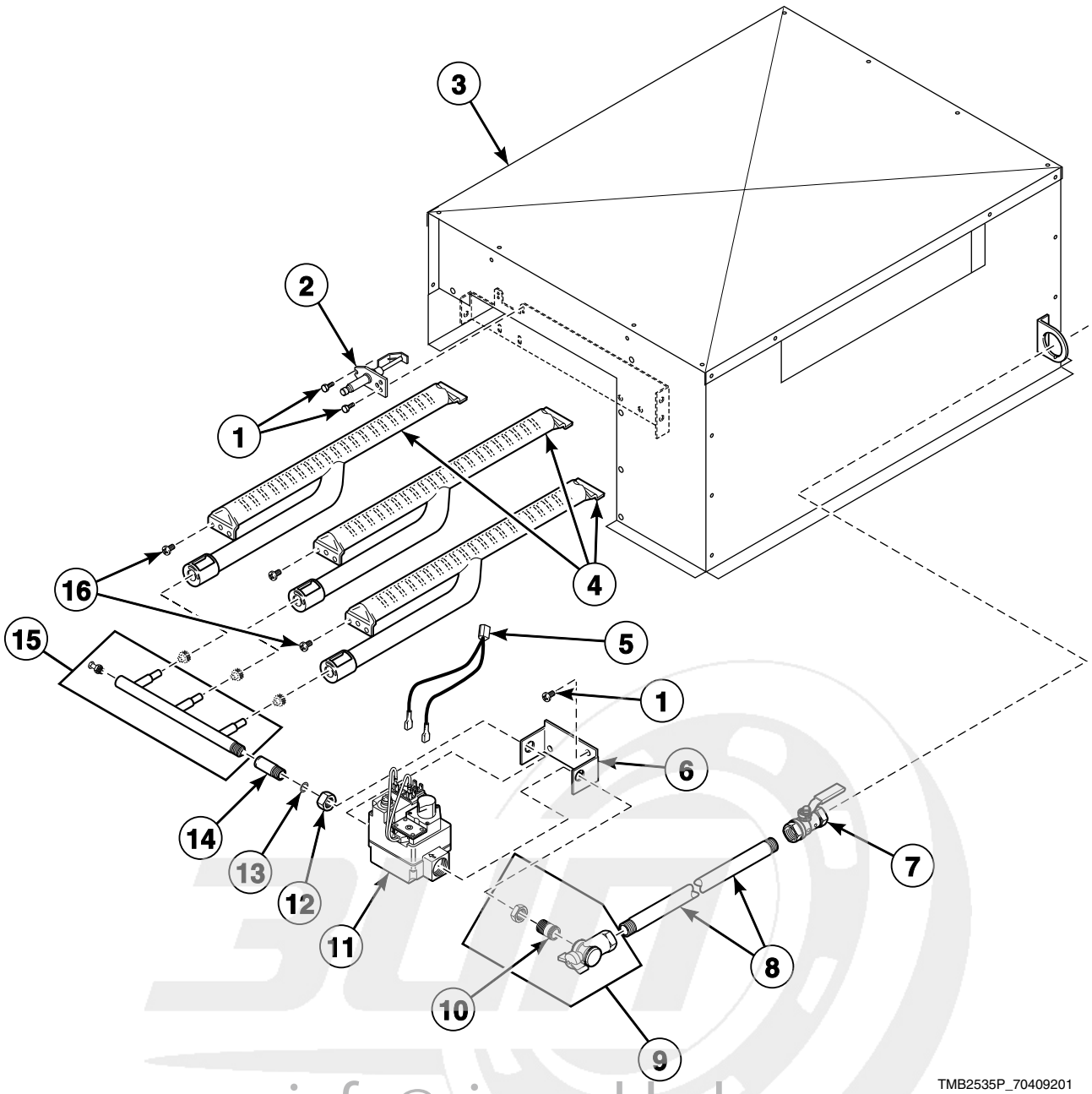

info@zipnasklade.ru
8(800)500-69-51

© Copyright, Alliance Laundry Systems LLC – DO NOT COPY or TRANSMIT

Gas Heater Components for All Models Except STF and UTF Models (Drawing 1 of 2)

REF	PART NO.	DESCRIPTION	COMMENTS
	M4543P3	L.P. Conversion Kit	Natural Gas (N.G.) to Liquid Petroleum Gas (L.P.); CE and Australian models
	M4454P3	L.P. Conversion Kit	N.G. to L.P.; Non-CE and non-Australian models
	M414503	Insulation	Used with item 3
1	430497	Screw	2 required
2	M406934P	Spark Igniter	Non-Australian models
	M410905P	Spark Igniter	Australian models
3	M414366	Gas Stove Assembly	Includes item 4
4	M410541P	Burner Assembly	3 required
5	M412997	Harness Assembly	Non-CE and non-Australian models
	M413650	Gas Valve Harness Assembly	CE and Australian models
6	M406814	Gas Valve Bracket	
7	M412562P	Gas Shut-Off Valve	CE models
8	M400749	Pipe	
9	M4983P3	Shut-Off Valve Kit	
10	44092201	Tailpiece	1/2 inch NPT; Models starting Serial No. 05040000256
	44092202	Tailpiece	1/2 inch BPT; Models starting Serial No. 05040000256
11	M410907P	Gas Valve	N.G.; Australian models
	M410908	Gas Valve	L.P.; Australian models
	M413332P	Gas Valve	N.G.; CE models
	M4909P3	Valve Replacement Kit	L.P.; CE models
	44138701P	Gas Valve Kit	L.P.; 50 Hertz; Non-CE models
	M4897P3	L.P. Gas Valve Kit	L.P.; 60 Hertz; Non-CE models
	44154501P	Gas Valve	N.G.; Non-CE models
	44042901P	Gas Valve Coil	60 Hertz; 24 Volt; Non-CE and non-Australian models
12	M401548	Nut	
13	M400605	Anti-Torque Ring	
14	M413395	Manifold Pipe Assembly	CE models
	44040501	Manifold Pipe	C, D and I non-CE and non-Australian models
	M406681	Manifold Pipe Assembly	All other models
15	M406810	Spud Holder Assembly	
16	430497	Screw	6 required

NOTE: For CE gas and orifice information, refer to Installation Manual.

info@zipnasklade.ru
8(800)500-69-51

© Copyright, Alliance Laundry Systems LLC – DO NOT COPY or TRANSMIT

Gas Heater Components for All Models Except STF and UTF Models (Drawing 2 of 2)

Non-CE and Non-Australian Models Starting Serial No. 0208002195

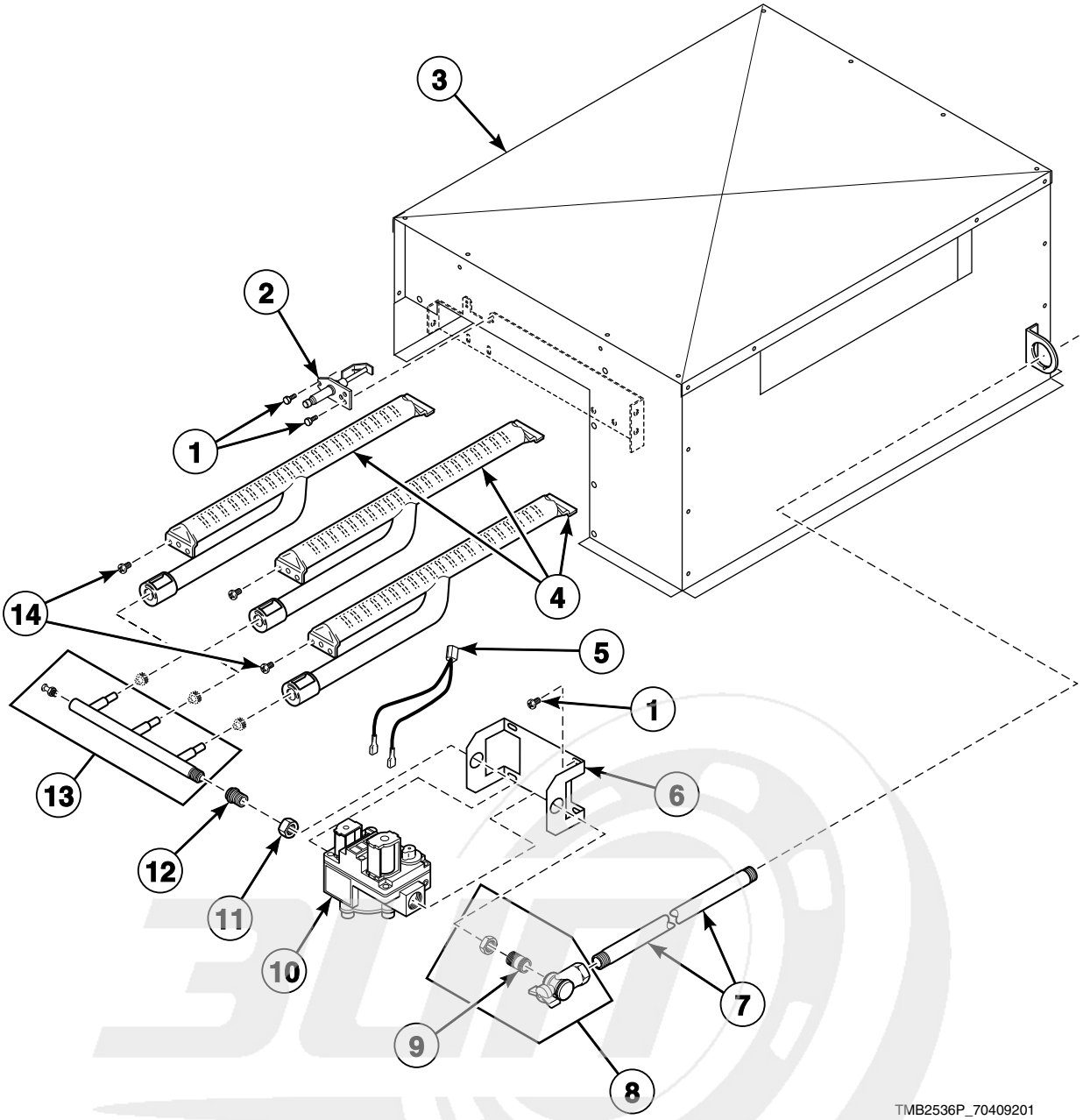

info@zipnasklade.ru
8(800)500-69-51

© Copyright, Alliance Laundry Systems LLC – DO NOT COPY or TRANSMIT

Gas Heater Components for All Models Except STF and UTF Models (Drawing 2 of 2)

REF	PART NO.	DESCRIPTION	COMMENTS
	M4454P3	L.P. Conversion Kit	Natural Gas (N.G.) to Liquid Petroleum Gas (L.P.)
	M414503	Insulation	Used with item 3
1	430497	Screw	2 required
2	M406934P	Spark Igniter	
3	M414366	Gas Stove Assembly	Includes item 4
4	M410541P	Burner Assembly	3 required
5	M412997	Harness Assembly	
6	44040401	Gas Valve Bracket	
7	M400749	Pipe	
8	M4983P3	Shut-Off Valve Kit	
9	44092201	Tailpiece	1/2 inch NPT; Models starting Serial No. 0504000256
	44092202	Tailpiece	1/2 inch BPT; Models starting Serial No. 0504000256
10	44154501P	Gas Valve	N.G.
	44154502P	Gas Valve	L.P.
11	M401548	Nut	
12	M406681	Manifold Pipe Assembly	
13	M406810	Spud Holder Assembly	
14	70240301	Screw	6 required

info@zipnasklade.ru
8(800)500-69-51

© Copyright, Alliance Laundry Systems LLC – DO NOT COPY or TRANSMIT

Burner Orifices for Non-CE Models Except STF and UTF Models

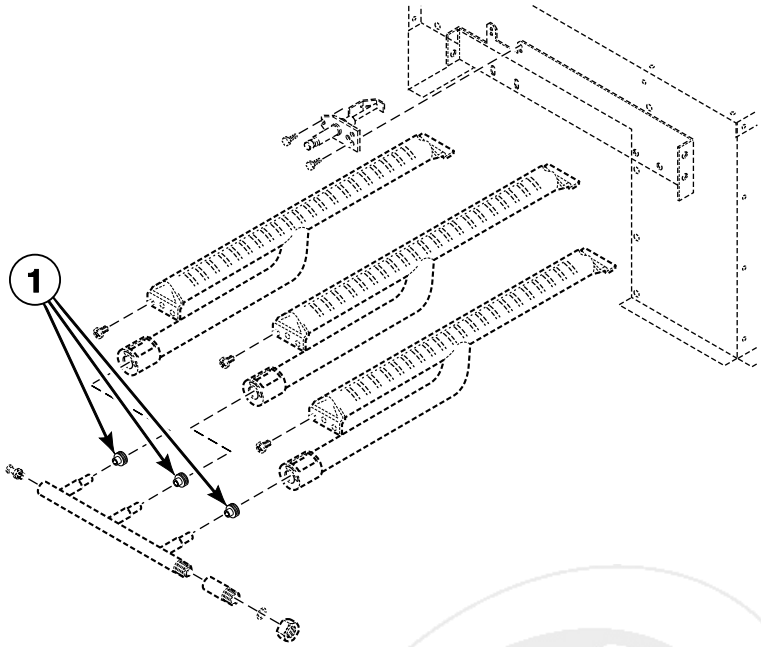

TMB2208P_70409201

info@zipnasklade.ru
8(800)500-69-51

© Copyright, Alliance Laundry Systems LLC – DO NOT COPY or TRANSMIT

Burner Orifices for Non-CE Models Except STF and UTF Models

REF	PART NO.	DESCRIPTION	COMMENTS
1	M401011	Burner Orifice	Liquid Petroleum Gas (L.P.); Drill no. 44 (2.2 mm); 0-2,000 feet; 3 required
	M401027	Burner Orifice	L.P.; Drill no. 45 (2.1 mm); 2,001-4,000 feet; 3 required
	M401003	Burner Orifice	L.P.; Drill no. 46 (2.1 mm); 4,001-6,000 feet; 3 required
	M400999	Burner Orifice	L.P.; Drill no. 47 (2.0 mm); 6,001-8,000 feet; 3 required
	M401001	Burner Orifice	L.P.; Drill no. 48 (1.9 mm); 8,001-10,000 feet; 3 required
	M401014	Burner Orifice	Natural Gas (N.G.); Drill no. 28 (3.6 mm); 0-2,000 feet; 3 required
	M400997	Burner Orifice	N.G.; Drill no. 29 (3.4 mm); 2,001-4,000 feet; 3 required
	M401021	Burner Orifice	N.G.; Drill no. 30 (3.3 mm); 4,001-8,000 feet; 3 required
	M401017	Burner Orifice	N.G.; Drill no. 31 (3.0 mm); 8,001-10,000 feet; 3 required

NOTE: For CE gas and orifice information, refer to Installation Manual.

info@zipnasklade.ru
8(800)500-69-51

© Copyright, Alliance Laundry Systems LLC – DO NOT COPY or TRANSMIT

Gas Heater Components for All Models Except STF and UTF Models - Rear View

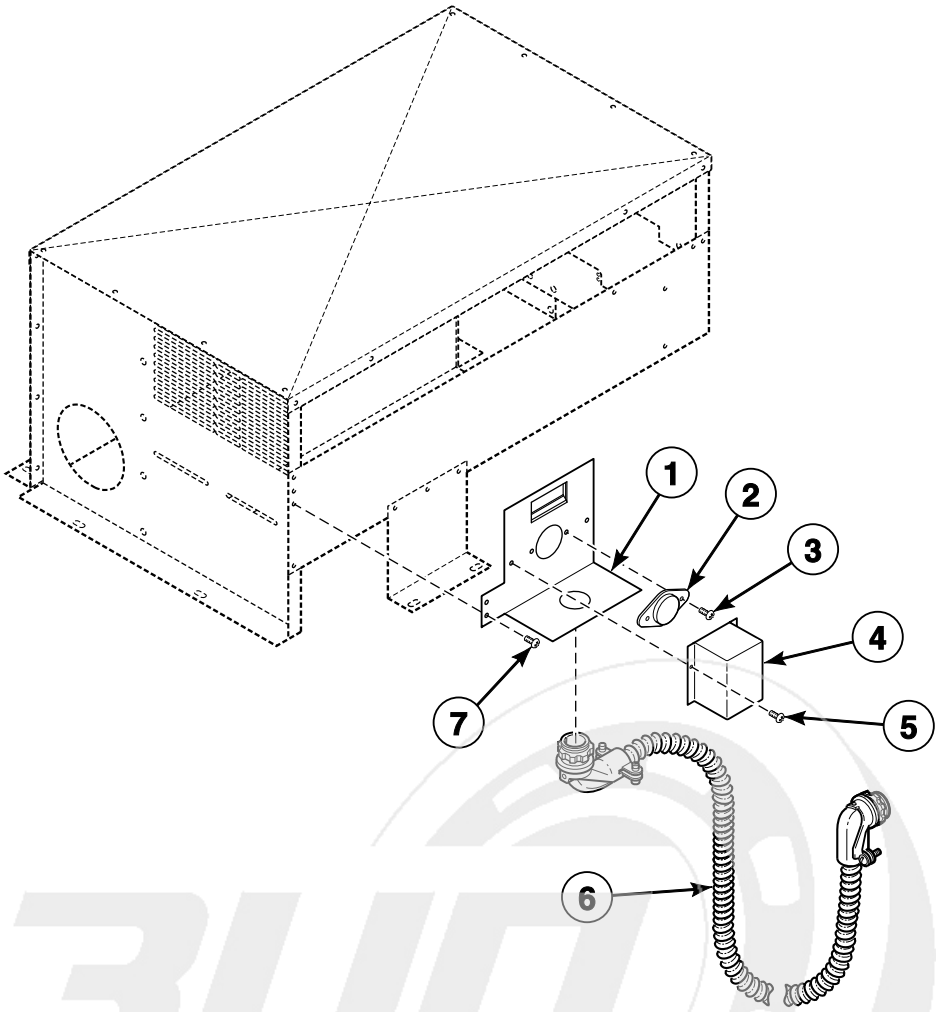

TMB2537P_70409201

info@zipnasklade.ru
8(800)500-69-51

© Copyright, Alliance Laundry Systems LLC – DO NOT COPY or TRANSMIT

Gas Heater Components for All Models Except STF and UTF Models - Rear View

REF	PART NO.	DESCRIPTION	COMMENTS
1	M406882	Thermostat Bracket	
2	M401404	Limit Thermostat	Non-Australian models
	M411943	Manual Reset Thermostat	Australian models
3	M402797	Screw	2 required
4	M414477	Thermostat Cover	
5	M400664	Screw	2 required
6	M413691	Stove Limit Harness Assembly	
7	430497	Screw	2 required

info@zipnasklade.ru
8(800)500-69-51

© Copyright, Alliance Laundry Systems LLC – DO NOT COPY or TRANSMIT

Gas Heater Components for STF and UTF Models

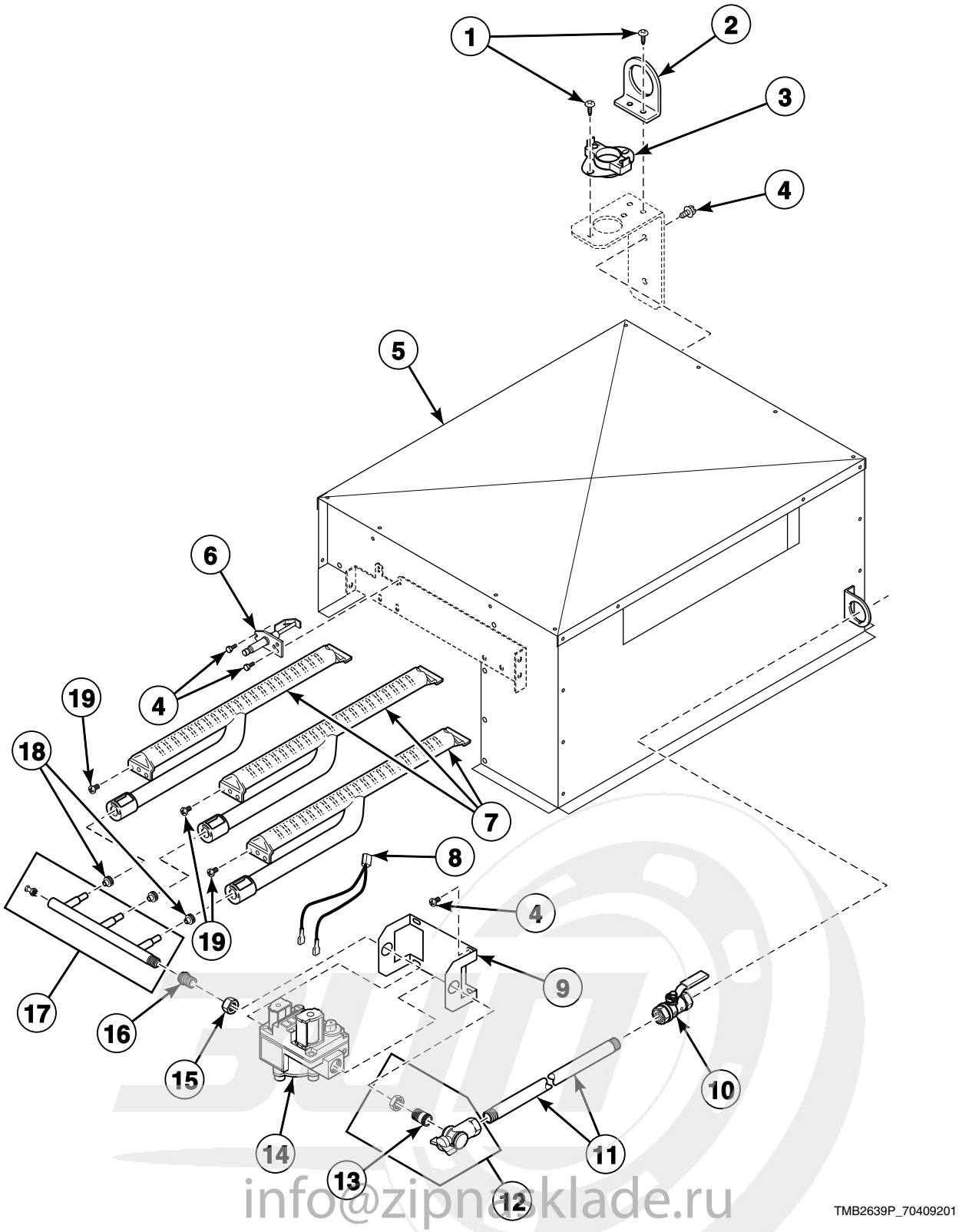

info@zipnaklade.ru
8(800)500-69-51

© Copyright, Alliance Laundry Systems LLC – DO NOT COPY or TRANSMIT

Gas Heater Components for STF and UTF Models

REF	PART NO.	DESCRIPTION	COMMENTS
	M4609P3	L.P. Conversion Kit	Natural Gas (N.G.) to Liquid Petroleum Gas (L.P.)
	M414503	Insulation	Used with item 5
1	M400664	Screw	4 required
2	M405343	Conduit Retainer	
3	M410220	Limit Thermostat	
4	430497	Screw	2 required
5	M413657P	Gas Stove Assembly	Includes item 7
6	M406934P	Spark Igniter	
7	M410541P	Burner Assembly	3 required
8	M412997	Harness Assembly	
9	M406814	Gas Valve Bracket	Models through Serial No. 0209007599
	44040401	Gas Valve Bracket	Models starting Serial No. 0209007600
10	M412562P	Gas Shut-Off Valve	Models through Serial No. 0209007599
11	M400749	Pipe	
12	M4983P3	Shut-Off Valve Kit	1/2 inch male NPT
13	44092201	Tailpiece	1/2 inch NPT
	44092202	Tailpiece	1/2 inch BPT
14	44154501P	Gas Valve	N.G.
	44154502P	Gas Valve	L.P.
	44042901P	Gas Valve Coil	60 Hertz; 24 Volt
15	M401548	Nut	
16	M406681	Manifold Pipe Assembly	
17	M406810	Spud Holder Assembly	
18	M406361	Burner Orifice	L.P.; Drill no. 40 (2.5 mm); 0-2,000 feet; 3 required
	M403017	Burner Orifice	L.P.; Drill no. 42 (2.4 mm); 2,001-4,000 feet; 3 required
	M406184	Burner Orifice	L.P.; Drill no. 43 (2.3 mm); 4,001-6,000 feet; 3 required
	M401011	Burner Orifice	L.P.; Drill no. 44 (2.2 mm); 6,001-8,000 feet; 3 required
	M401027	Burner Orifice	L.P.; Drill no. 45 (2.1 mm); 8,001-10,000 feet; 3 required
	M401002	Burner Orifice	N.G.; Drill no. 20 (4.1 mm); 0-2,000 feet; 3 required
	M401020	Burner Orifice	N.G.; Drill no. 23 (3.9 mm); 2,001-4,000 feet; 3 required
	M402997	Burner Orifice	N.G.; Drill no. 25 (3.8 mm); 4,001-6,000 feet; 3 required
	M400998	Burner Orifice	N.G.; Drill no. 27 (3.7 mm); 6,001-8,000 feet; 3 required
	M400997	Burner Orifice	N.G.; Drill no. 29 (3.4 mm); 8,001-10,000 feet; 3 required
19	70240301	Screw	6 required

info@zipnasklade.ru
8(800)500-69-51

© Copyright, Alliance Laundry Systems LLC – DO NOT COPY or TRANSMIT

Electric Heater Components for Non-CE Models

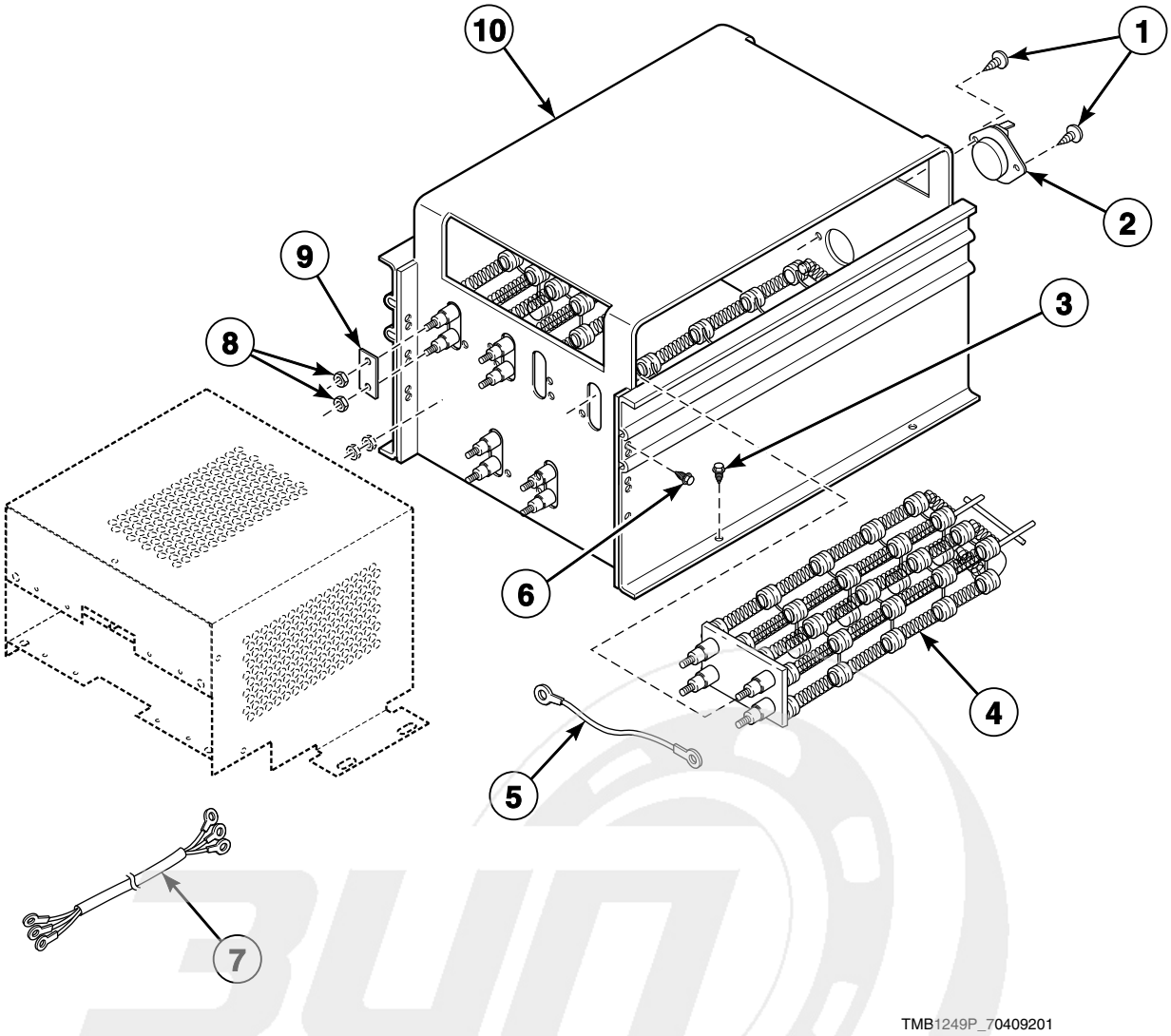

info@zipnasklade.ru
8(800)500-69-51

© Copyright, Alliance Laundry Systems LLC – DO NOT COPY or TRANSMIT

Electric Heater Components for Non-CE Models

REF	PART NO.	DESCRIPTION	COMMENTS
1	33562	Screw	
2	M409433	Limit Thermostat	21 kW; 240 Volt/50 Hertz/1 Phase
3	430497	Screw	
4	M410939P	Heater Element	10 kW; 240 Volt; 3 required for 240 Volt/60 Hertz/3 Phase, 400-415 Volt/50 Hertz/3 Phase and 480 Volt/60 Hertz/3 Phase
	M410940P	Heater Element	10 kW; 208 Volt; 3 required for 200 Volt/50 Hertz/3 Phase and 200-208 Volt/60 Hertz/3 Phase
	M410941P	Heater Element	10 kW; 220 Volt; 3 required for 380 Volt/50 Hertz/3 Phase
5	M412287	Jumper Wire Assembly	1 required for 380 Volt/50 Hertz/3 Phase and 400-415 Volt/50 Hertz/3 Phase; 2 required for 480 Volt/60 Hertz/3 Phase
6	70240301	Screw	
7	M413959	Heater Cable Assembly	H1-H3; 200 Volt/50 Hertz/3 Phase, 200-208 Volt/60 Hertz/3 Phase, 240 Volt/60 Hertz/3 Phase, 380 Volt/50 Hertz/3 Phase, 400-415 Volt/50 Hertz/3 Phase, 480 Volt/60 Hertz/3 Phase and 240 Volt/50 Hertz/1 Phase
	M413960	Heater Cable Assembly	H4-H6; 200 Volt/50 Hertz/3 Phase, 200-208 Volt/60 Hertz/3 Phase, 240 Volt/60 Hertz/3 Phase and 240 Volt/50 Hertz/1 Phase
8	70054	Nut	
9	M400866	Jumper Bar	380 Volt/50 Hertz/3 Phase, 400-415 Volt/50 Hertz/3 Phase and 480 Volt/60 Hertz/3 Phase
	M400869	Jumper Strip	3 required for 480 Volt/60 Hertz/3 Phase; 6 required for all others
10	M414825	Electric Heater Cabinet Assembly	

info@zipnasklade.ru
8(800)500-69-51

© Copyright, Alliance Laundry Systems LLC – DO NOT COPY or TRANSMIT

Electric Heater Components for CE Models

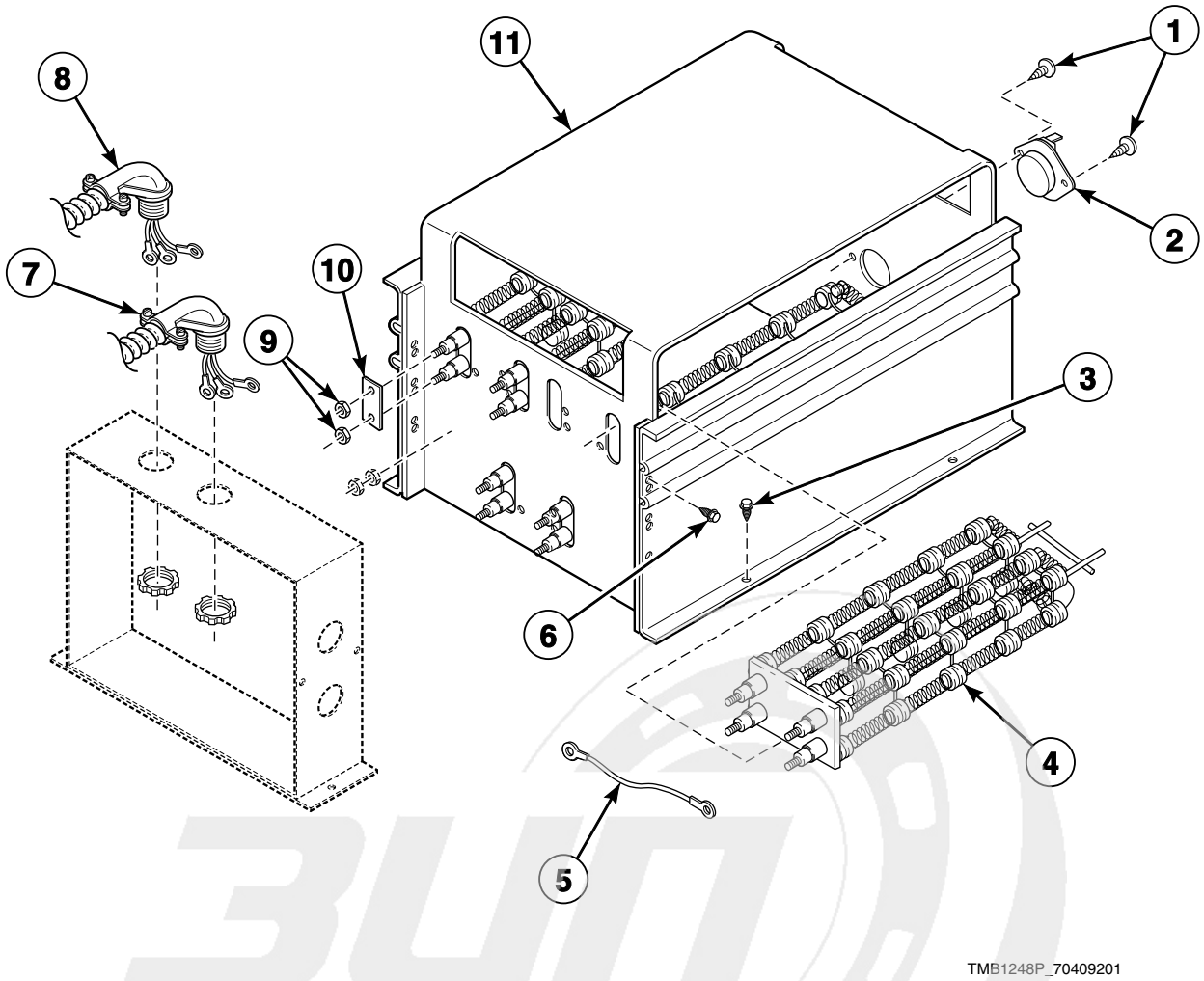

info@zipnasklade.ru
8(800)500-69-51

© Copyright, Alliance Laundry Systems LLC – DO NOT COPY or TRANSMIT

Electric Heater Components for CE Models

REF	PART NO.	DESCRIPTION	COMMENTS
1	33562	Screw	
2	M409433	Limit Thermostat	
3	430497	Screw	
4	M410939P	Heater Element	10 kW; 240 Volt; 3 required for 230 Volt/50 Hertz/3 Phase and 415 Volt/50 Hertz/3 Phase
	M410941P	Heater Element	10 kW; 220 Volt; 3 required for 380 Volt/50 Hertz/3 Phase
5	M412287	Jumper Wire Assembly	380 Volt/50 Hertz/3 Phase and 415 Volt/50 Hertz/3 Phase
6	70240301	Screw	
7	M412802	Heater Cable Harness Assembly	240 Volt; 230 Volt/50 Hertz/3 Phase; Includes nut
8	M412801	Heater Cable Harness Assembly	230 Volt/50 Hertz/3 Phase, 380 Volt/50 Hertz/3 Phase and 415 Volt/50 Hertz/3 Phase; Includes nut
9	70054	Nut	12 required
10	M400869	Jumper Strip	6 required
	M400866	Jumper Bar	380 Volt/50 Hertz/3 Phase and 415 Volt/50 Hertz/3 Phase
11	M414825	Electric Heater Cabinet Assembly	

info@zipnasklade.ru
8(800)500-69-51

© Copyright, Alliance Laundry Systems LLC – DO NOT COPY or TRANSMIT

Airflow Switch Assembly

Electric and Gas Models

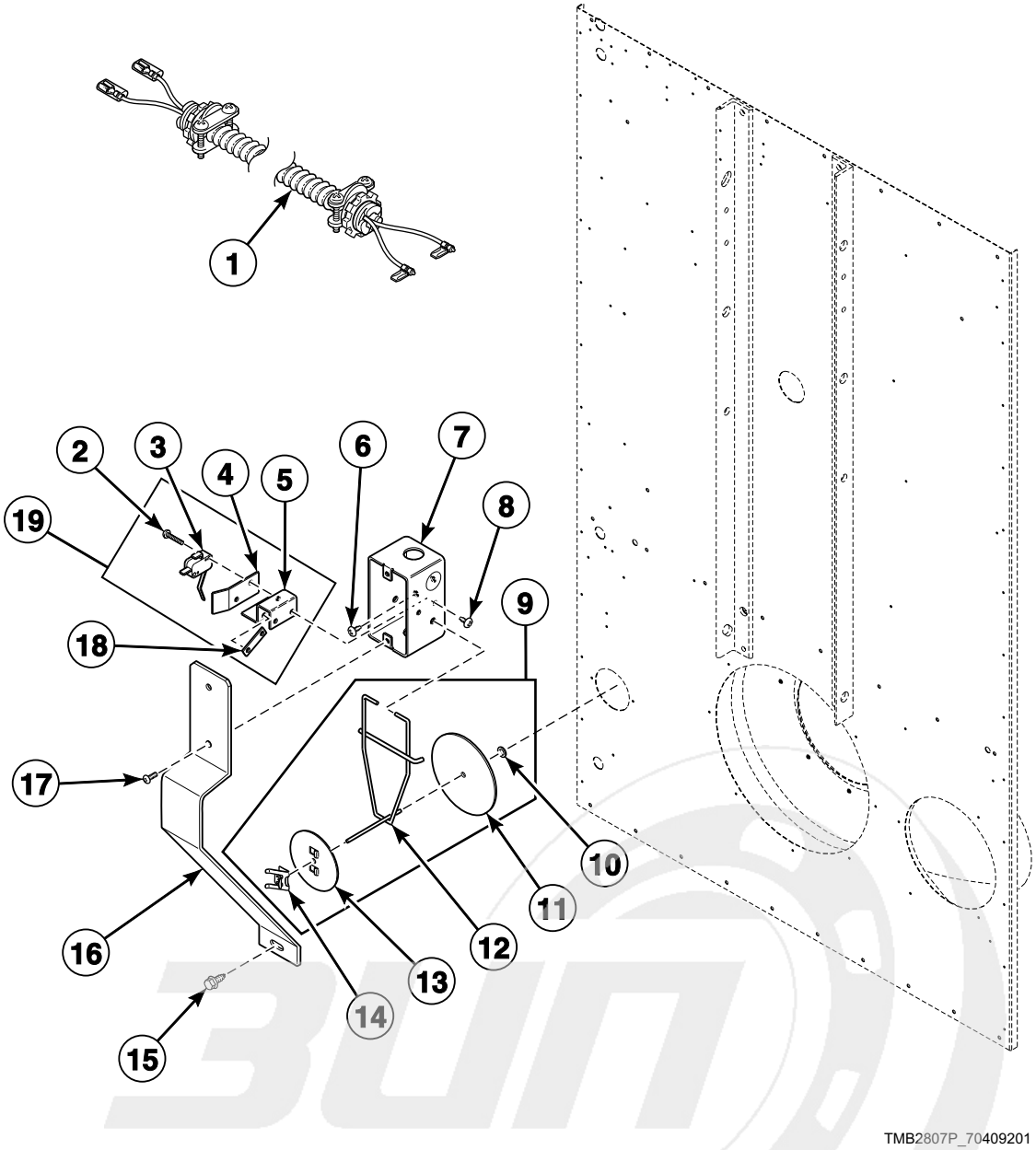

info@zipnasklade.ru
8(800)500-69-51

© Copyright, Alliance Laundry Systems LLC – DO NOT COPY or TRANSMIT

Airflow Switch Assembly

REF	PART NO.	DESCRIPTION	COMMENTS
1	M413689	Airflow Switch Harness Assembly	
2	M401938	Screw	
3	M400944	Airflow Switch	Non-CE models
	M412423	Actuator Switch	CE models
4	M400712	Airflow Switch Insulator Barrier	
5	M409202	Airflow Switch Bracket	
6	430497	Screw	2 required
7	M403235	Airflow Switch Handy Box	
8	M400664	Screw	
9	M400541	Vane Assembly	
10	M400977	Nut	
11	M413475	Airflow Switch Vane	STF and UTF models
	M400253	Vane	All other models
12	M400753	Airflow Switch Vane Lever	
13	M400822	Counterweight	
14	M400976	Clip	
15	51780	Screw	
16	M410544	Airflow Switch Guard	
17	M400072	Screw	
18	M400979	Nut	
19	M401883	Airflow Switch Assembly	Includes 2-5 and 18

info@zipnasklade.ru
8(800)500-69-51

© Copyright, Alliance Laundry Systems LLC – DO NOT COPY or TRANSMIT

Steam Heater and Valve

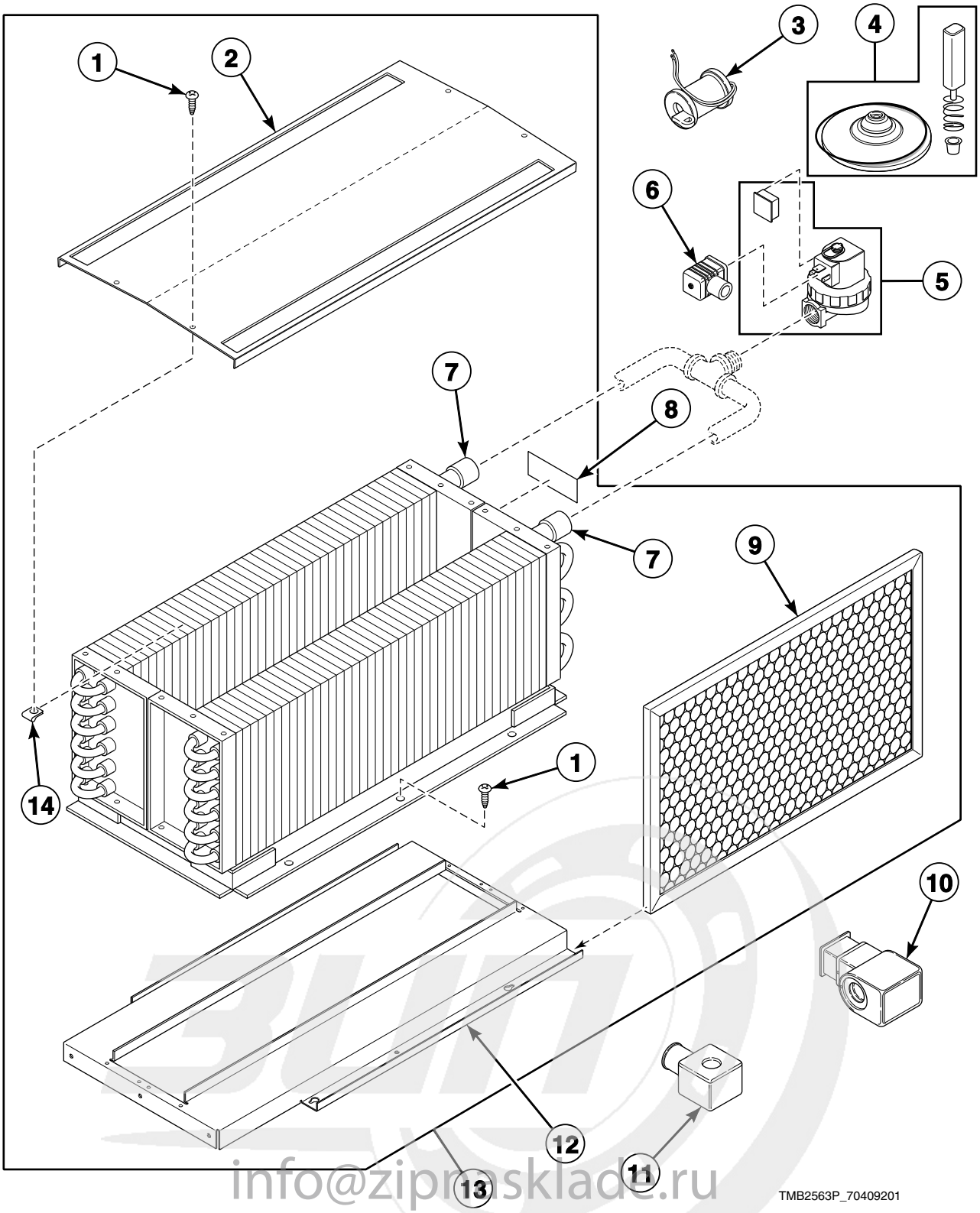

info@zipnasklade.ru
8(800)500-69-51

© Copyright, Alliance Laundry Systems LLC – DO NOT COPY or TRANSMIT

Steam Heater and Valve

REF	PART NO.	DESCRIPTION	COMMENTS
	M405188	Screw	Thermal oil models; 8 required
	33562	Screw	Thermal oil models; 4 required
	M414760	Top Cover	Thermal oil models
1	430497	Screw	
2	M400828	Low Pressure Steam Cover	
3	70205701P	Steam Valve Coil	All models except thermal oil models; Models through 2/28/05; 60 Hertz; 24 Volt
	M412258	Steam Valve Coil	All models except thermal oil models; Models through 2/28/05; 50 Hertz; 24 Volt
4	F8379502	Valve Rebuild Kit	All models except thermal oil models
5	F8322903	Steam Valve	All models except thermal oil models; 50 Hertz
	F8322902	Steam Valve	All models except thermal oil models; 60 Hertz
6	70370301P	Solenoid Valve DIN Connector	All models except thermal oil models
7	M400637P	Steam Coil	2 required; All models except thermal oil models
8	902303	Steam Pressure Label	All models except thermal oil models; Near inlet to indicate maximum steam pressure
9	44172001	Filter	2 required; Aluminum
	44104201	Air Filter	2 required; Fiberglass
10	70351012	Steam Solenoid	All models except thermal oil models; Models starting 3/1/05; 50 Hertz
11	70351011P	Steam Solenoid	All models except thermal oil models; Models starting 3/1/05; 60 Hertz
12	44007501	Steam Stand Box	
13	44020401P	Steam Heater Assembly	All models except thermal oil models
14	M400974	Clip	

info@zipnasklade.ru
8(800)500-69-51

© Copyright, Alliance Laundry Systems LLC – DO NOT COPY or TRANSMIT

Rotation Sensor

C, D and I Models

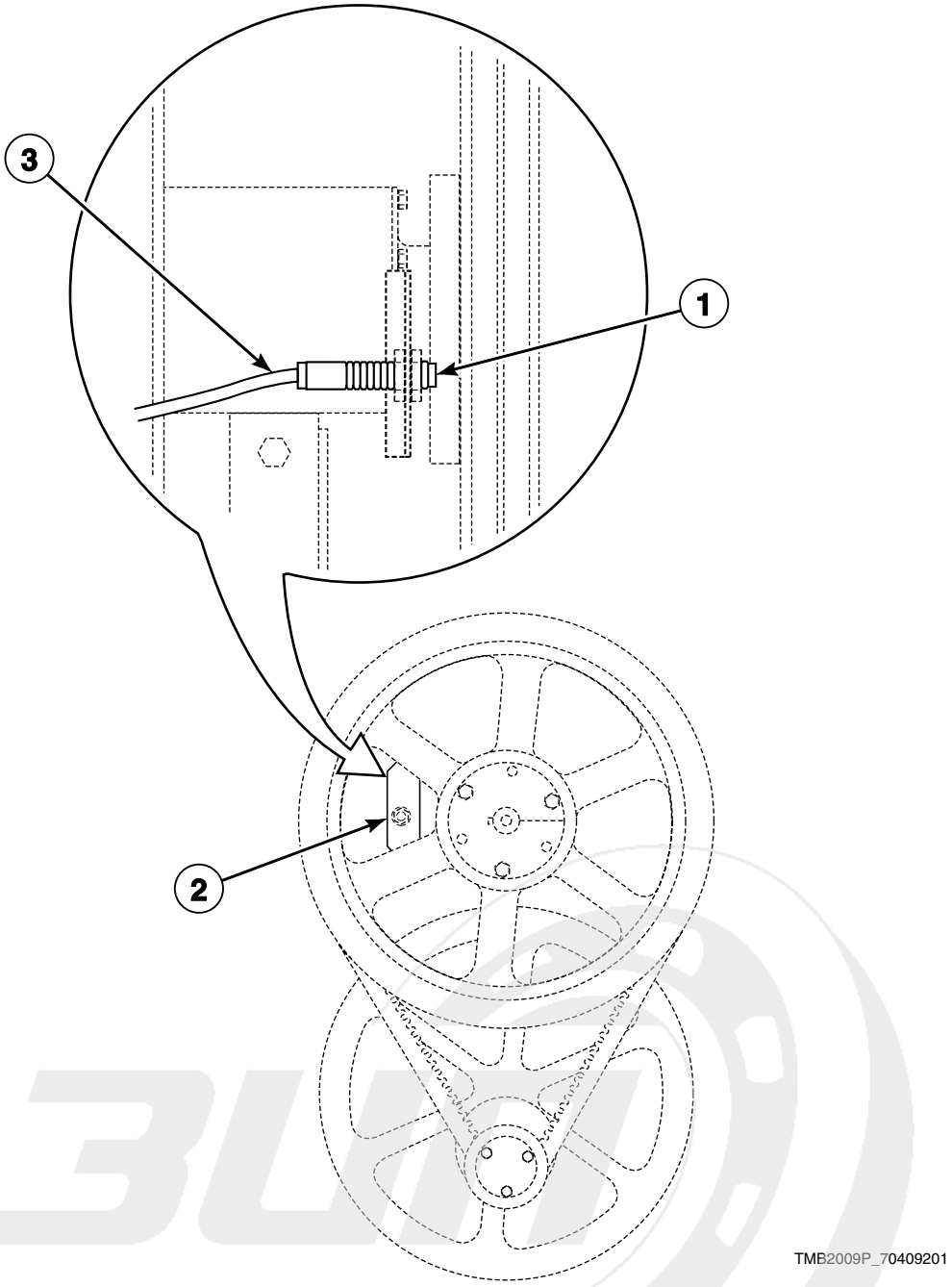

info@zipnasklade.ru
8(800)500-69-51

© Copyright, Alliance Laundry Systems LLC – DO NOT COPY or TRANSMIT

Rotation Sensor

REF	PART NO.	DESCRIPTION	COMMENTS
1	7009P	Rotation Sensor Kit	C and I models; Includes plug
	70417401P	Rotation Sensor Assembly	D models; Includes plug
2	44044501	Proximity Bracket	
3	70274102P	Rotation Sensor Cable Assembly	Includes connector

info@zipnasklade.ru
8(800)500-69-51

© Copyright, Alliance Laundry Systems LLC – DO NOT COPY or TRANSMIT

Duct and Damper Assembly

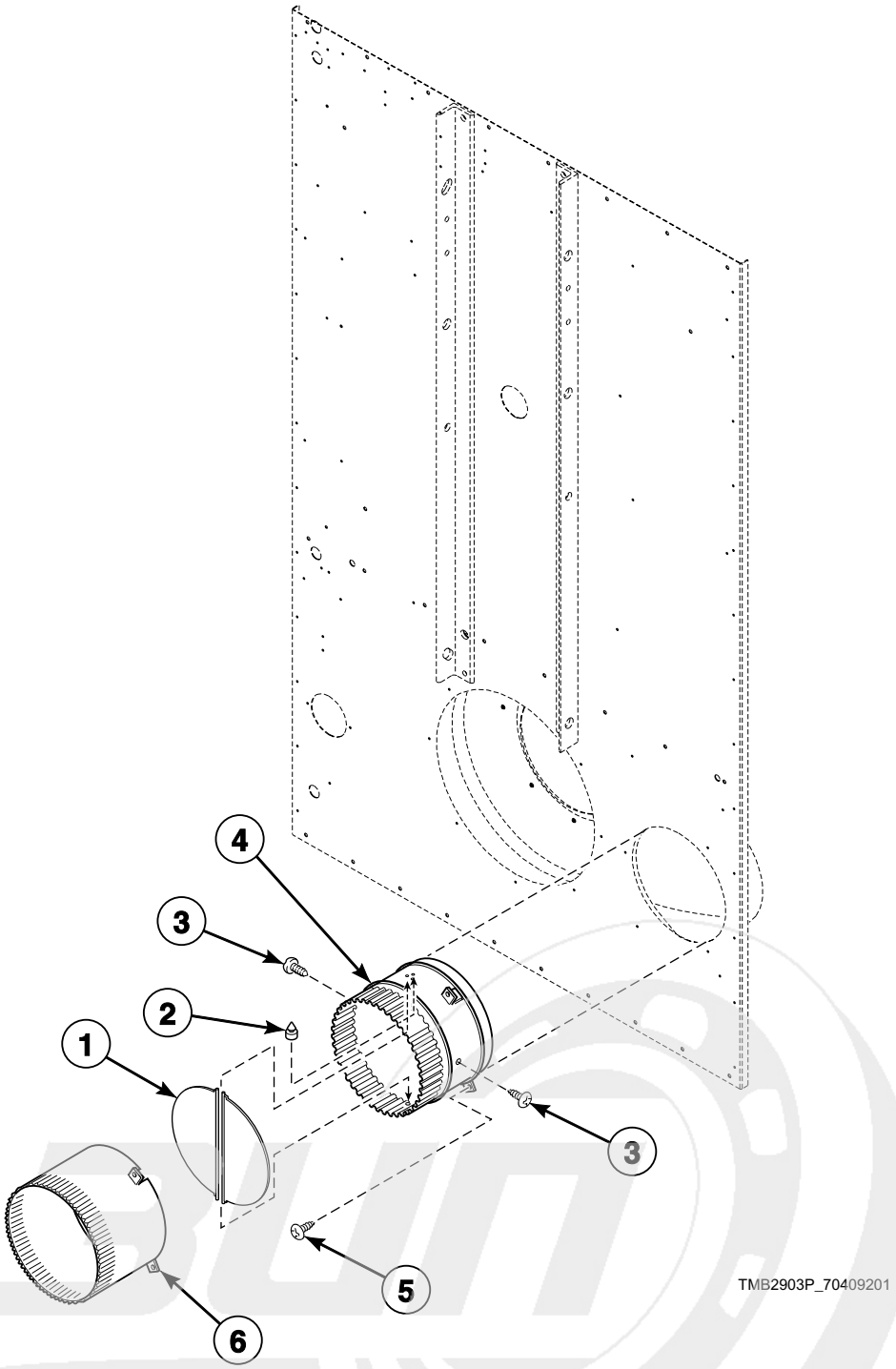

info@zipnasklade.ru
8(800)500-69-51

© Copyright, Alliance Laundry Systems LLC – DO NOT COPY or TRANSMIT

Duct and Damper Assembly

REF	PART NO.	DESCRIPTION	COMMENTS
1	M413382	Thimble Vane Assembly	STF and UTF models; 2 required
	M400503	Thimble Vane Assembly	All other models; 2 required
2	M400795	Bumper	
3	M405188	Screw	2 required
4	M412288	Exhaust Thimble Assembly	All models except STF75L, STF75N, UTF75L and UTF75N
5	M411072	Screw	3 required
6	M413173	Exhaust Thimble	STF and UTF models

info@zipnasklade.ru
8(800)500-69-51

© Copyright, Alliance Laundry Systems LLC – DO NOT COPY or TRANSMIT

Rear Panel Assembly

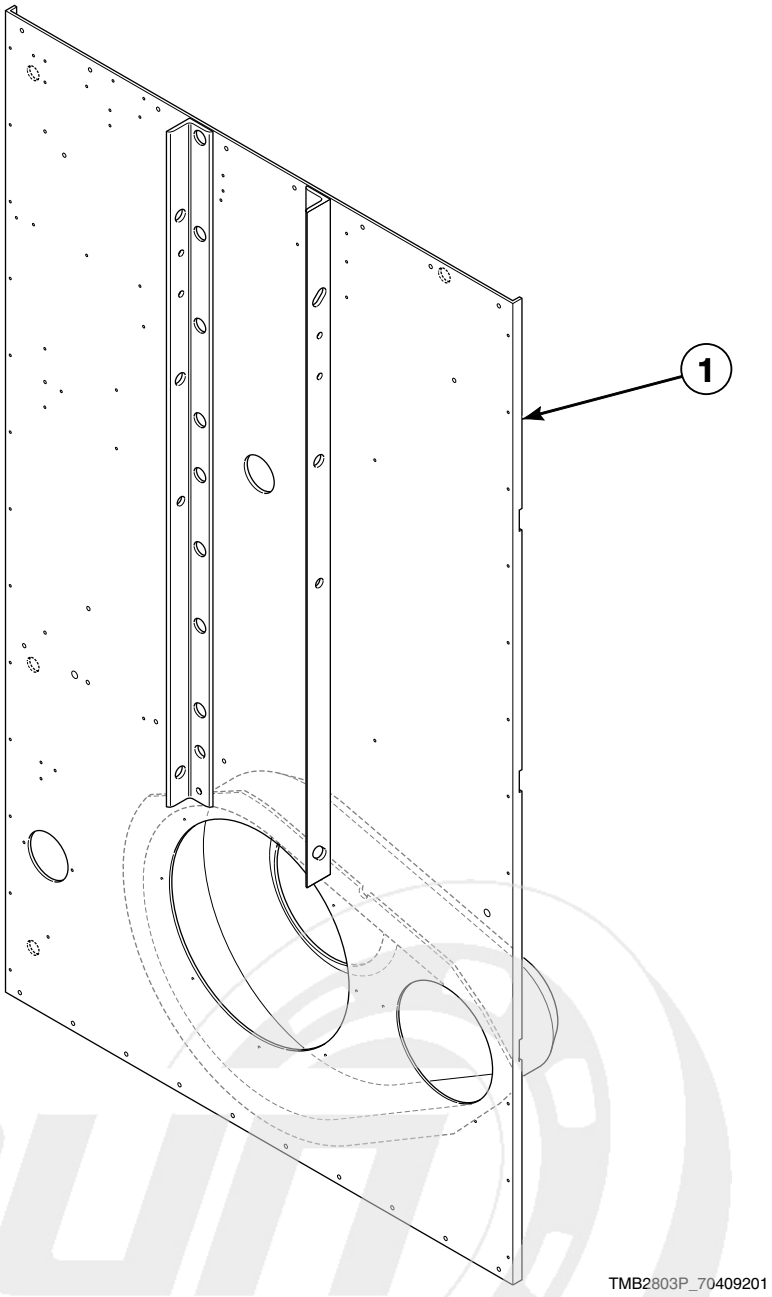

info@zipnasklade.ru
8(800)500-69-51

© Copyright, Alliance Laundry Systems LLC – DO NOT COPY or TRANSMIT

Rear Panel Assembly

REF	PART NO.	DESCRIPTION	COMMENTS
1	N/A	Rear Panel Assembly	STF and UTF models
	M414747	Rear Panel Assembly	All other models

N/A = Part no longer available

info@zipnasklade.ru
8(800)500-69-51

© Copyright, Alliance Laundry Systems LLC – DO NOT COPY or TRANSMIT

Contactor Box Assembly Harnesses (Drawing 1 of 3)

Use with Contactor Box Assembly (Drawing 1 of 21)
Non-CE Gas, Steam and Electric Nonreversing Models

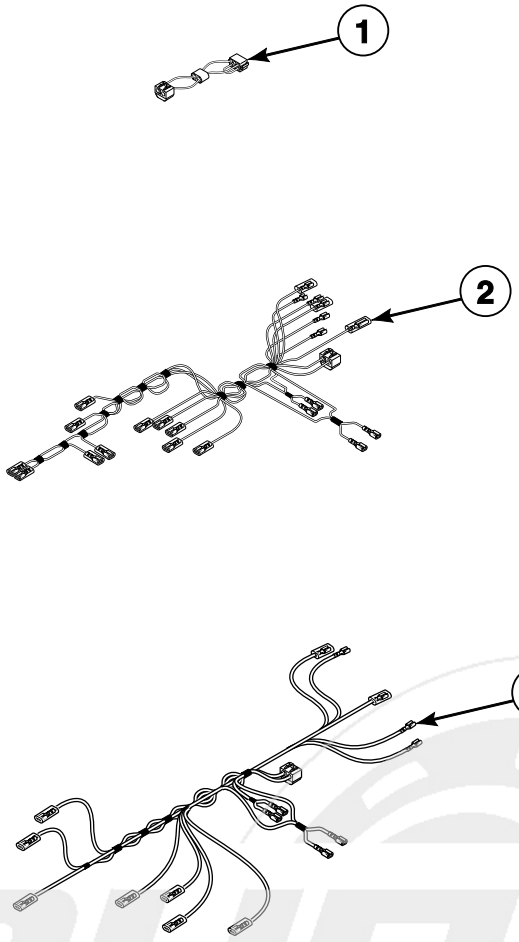

TMB2773P_70409201

info@zipnasklade.ru
8(800)500-69-51

© Copyright, Alliance Laundry Systems LLC – DO NOT COPY or TRANSMIT

Contactor Box Assembly Harnesses (Drawing 1 of 3)

REF	PART NO.	DESCRIPTION	COMMENTS
1	M413507	Jumper Configuration Assembly	240 Volt
	M413506	Jumper Harness Assembly	208 Volt; Use on 200 and 200-208 Volt
2	M413683P	Control Box Harness Assembly	3 Phase
3	44005801	Control Box Harness	2 wire
	44005901	Control Box Harness	3 wire; Gas and steam models

info@zipnasklade.ru
8(800)500-69-51

© Copyright, Alliance Laundry Systems LLC – DO NOT COPY or TRANSMIT

Contactor Box Assembly Harnesses (Drawing 2 of 3)

Use with Contactor Box Assembly (Drawing 3 of 21)
Non-CE Gas, Steam and Electric Reversing Models Except N Models

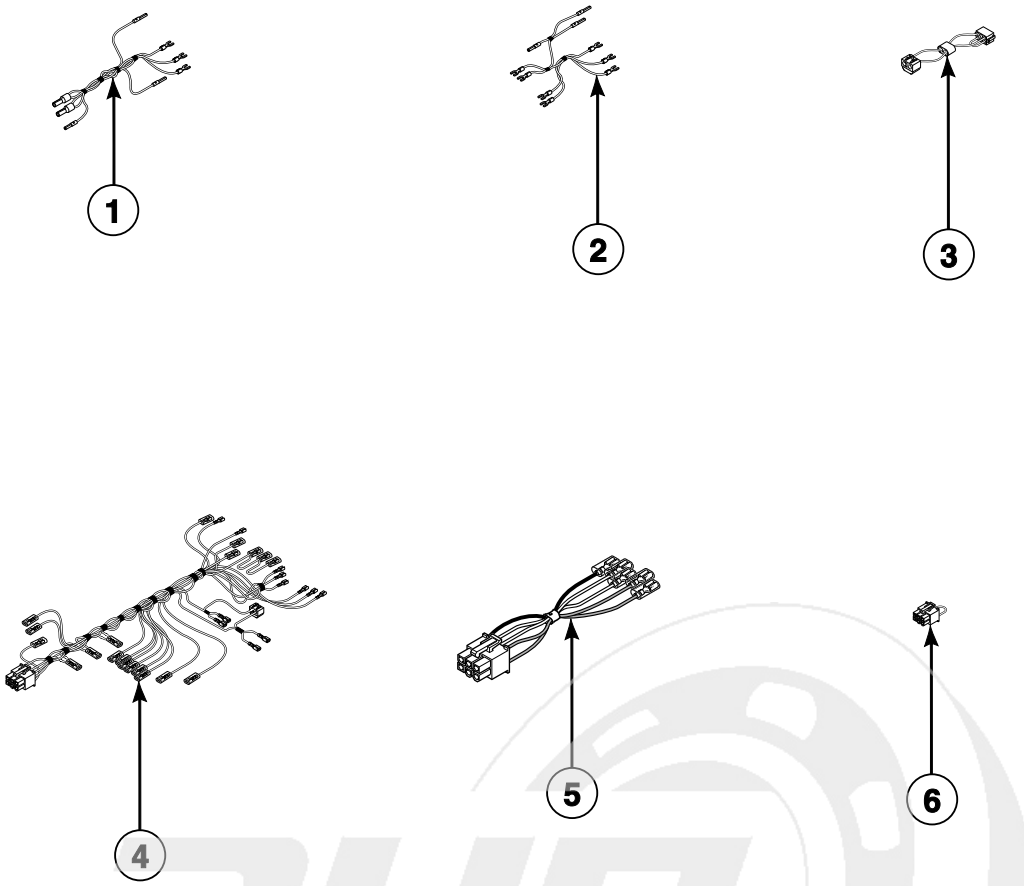

info@zipnasklade.ru
8(800)500-69-51

© Copyright, Alliance Laundry Systems LLC – DO NOT COPY or TRANSMIT

Contactor Box Assembly Harnesses (Drawing 2 of 3)

REF	PART NO.	DESCRIPTION	COMMENTS
1	M413695	Reversing Contactor Jumper Assembly	Lower; 1 Phase
2	M413624	Reversing Contactor Jumper Assembly	Upper; 3 Phase
3	M413506	Jumper Harness Assembly	208 Volt; 200 Volt/50 Hertz/3 Phase and 200-208 Volt/60 Hertz/3 Phase
	M413507	Jumper Configuration Assembly	240 Volt; 200-208 or 240 Volt/50 or 60 Hertz/1 or 3 Phase and 230-240 Volt/50 Hertz/1 or 3 Phase
4	M413684P	Contactor Box Harness Assembly	200 Volt/50 Hertz/3 Phase, 200-208 or 240 Volt/50 or 60 Hertz/3 Phase and 230-240 Volt/50 Hertz/3 Phase
	44006001	Control Box Harness	230-240 or 240 Volt/50 Hertz/1 Phase
5	44008001	Reversing Timer Harness	RT control suffix
6	M413168	Bypass Harness Assembly	R3, RD, RM and RQ control suffixes

info@zipnasklade.ru
8(800)500-69-51

© Copyright, Alliance Laundry Systems LLC – DO NOT COPY or TRANSMIT

Contactor Box Assembly Harnesses (Drawing 3 of 3)

Use with Contactor Box Assembly (Drawing 15 of 21)
CE Electric Models

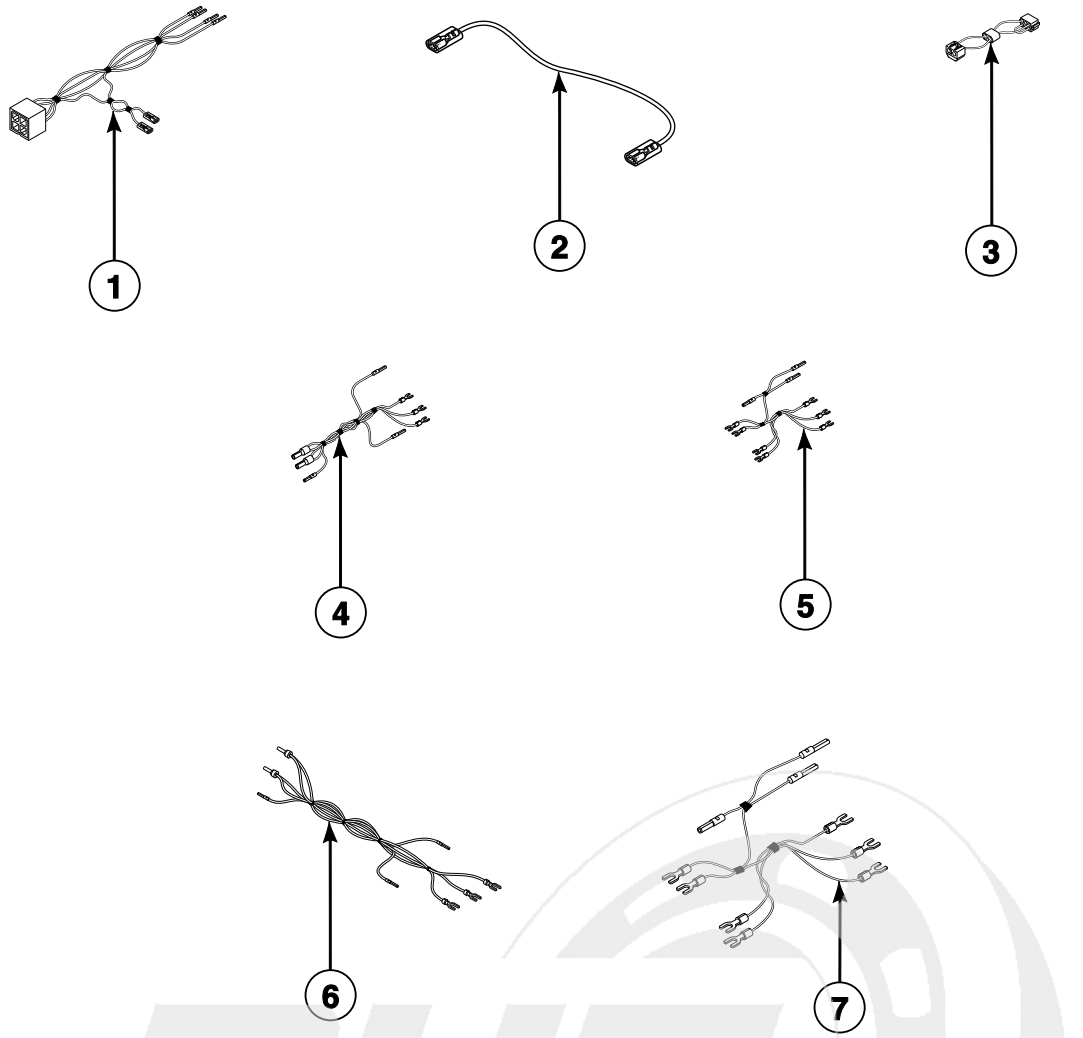

TMB2775P_70409201

info@zipnasklade.ru
8(800)500-69-51

© Copyright, Alliance Laundry Systems LLC – DO NOT COPY or TRANSMIT

Contactor Box Assembly Harnesses (Drawing 3 of 3)

REF	PART NO.	DESCRIPTION	COMMENTS
1	M414028	Transformer Harness Assembly	Primary
	M414029	Transformer Harness Assembly	Secondary
	44043101	Transformer Harness	Secondary; DO, DV, DX and RD control suffixes
2	M412740	Jumper Cable Wire	8 gauge; 6 required
	44014501	Jumper Wire	3 required
	44014601	Jumper Wire	3 required
	44014701	Jumper Wire	3 required
	M413934	Jumper Cable Assembly	3 required
3	M413507	Jumper Configuration Assembly	240 Volt; 3O, 3V, 3X, DO, DV, DX, OM, R3, RD and RM control suffixes
	M413506	Jumper Harness Assembly	208 Volt
4	M414078	Jumper Harness Assembly	3O, 3V, 3X, DO, DV, DX, OM, R3, RD and RM control suffixes
5	M412928	Reversing Jumper Harness Assembly	Upper; 2 required; R3, RD and RM control suffixes
	M412929	Reversing Jumper Harness Assembly	Lower; R3, RD and RM control suffixes
6	M412871	Jumper Harness Assembly	400 Volt; BC, BL, BU, BX, BY, NC, NR, NX, NY, ZC, ZR, ZX and ZY control suffixes
7	M414034	Reversing Contactor Harness Assembly	R3, RD and RM control suffixes

info@zipnasklade.ru
8(800)500-69-51

© Copyright, Alliance Laundry Systems LLC – DO NOT COPY or TRANSMIT

Contactor Box Assembly (Drawing 1 of 21)

Non-CE Gas, Steam and Electric Nonreversing Models
120 Volt/60 Hertz/1 Phase; 230-240 or 240 Volt/50 Hertz/1 Phase;
200-208 or 240 Volt/50 or 60 Hertz/1 or 3 Phase; 200 or 230-240 Volt/50 Hertz/3 Phase

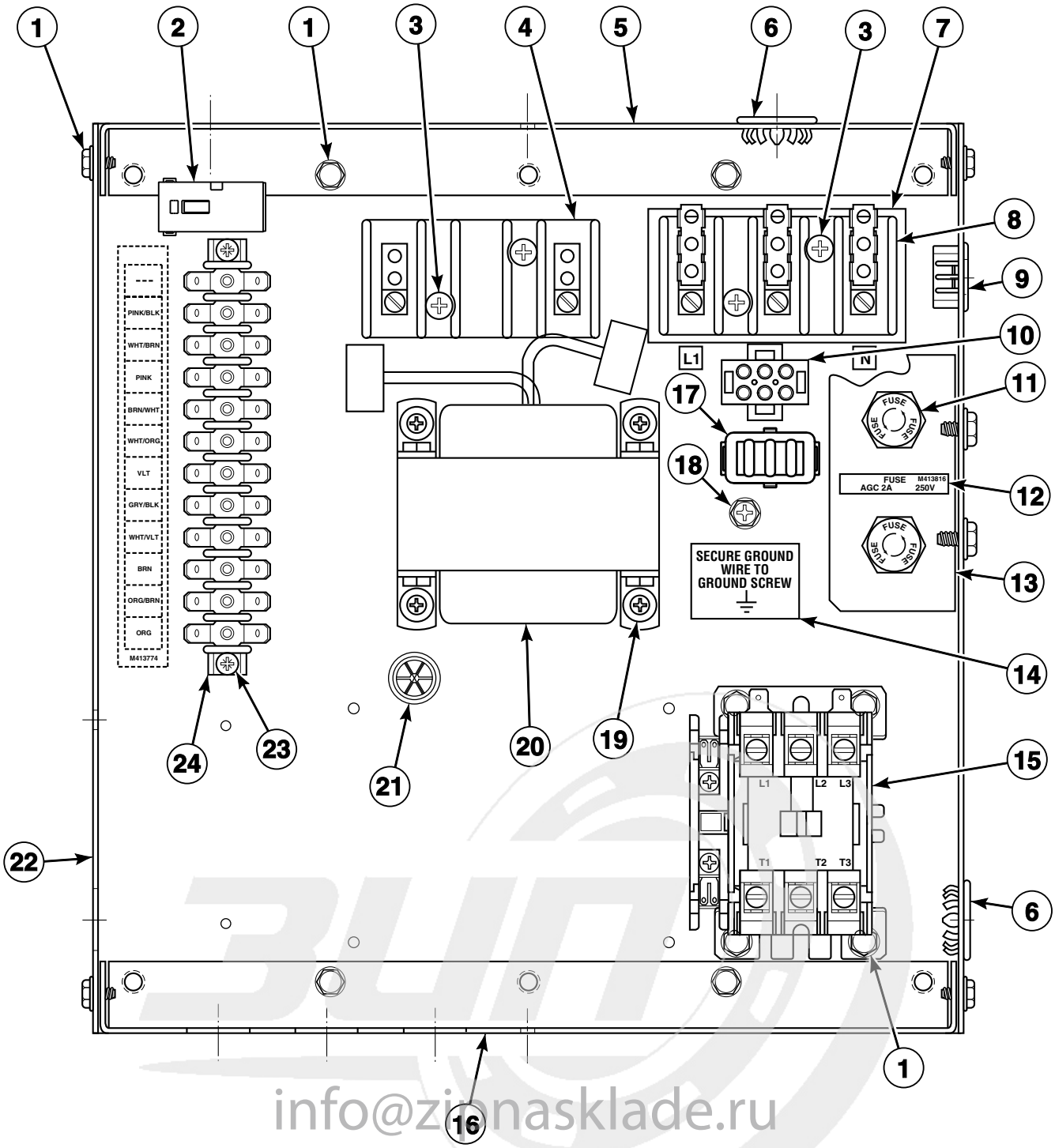

info@zipnasklade.ru
8(800)500-69-51

TMB2717P_70409201

© Copyright, Alliance Laundry Systems LLC – DO NOT COPY or TRANSMIT

Contactor Box Assembly (Drawing 1 of 21)

REF	PART NO.	DESCRIPTION	COMMENTS
	M413760	Contactor Box Cover	Gas and steam models
	M413856	Electric Accessory Box Cover	Electric models
	44127701	Warning Label	Extended tumble; On cover
1	51780	Screw	18 required for 200-208 or 240 Volt/50 or 60 Hertz/1 or 3 Phase and 200 or 230-240 Volt/50 Hertz/3 Phase; 14 required for 120 Volt/60 Hertz/1 Phase and 230-240 or 240 Volt/50 Hertz/1 Phase
2	M413930P	Ferrite Core Assembly	OM control suffix
3	M405824	Screw	4 required
4	M405364	Terminal Block	2 pole
5	M413757	Contactor Box End	Top
6	M400985	Plug	7/8 inch; 2 required
7	M413862	Insulator	
8	430642	Terminal Block	3 pole
9	M400770	Snap Bushing	7/8 inch; Electric models
10	M413878	Network Capacitor Harness Assembly	3O, 3V, 3X, DO, DV, DX and OM control suffixes
11	91024P	Fuse Receptacle	250 Volt; 2 required for 200-208 or 240 Volt/50 or 60 Hertz/1 or 3 Phase and 200 or 230-240 Volt/50 Hertz/3 Phase; 1 required for 120 Volt/60 Hertz/1 Phase and 230-240 or 240 Volt/50 Hertz/1 Phase
	M413118	Fuse	250 Volt; 2 Amp; 2 required for 200-208 or 240 Volt/50 or 60 Hertz/1 or 3 Phase and 200 or 230-240 Volt/50 Hertz/3 Phase; 1 required for 120 Volt/60 Hertz/1 Phase and 230-240 or 240 Volt/50 Hertz/1 Phase
12	M413816	Fuse Sticker	2 Amp
13	M413575	Fuse Holder Bracket	
14	M403047	Secure Ground Label	Electrical
15	M413614P	Fan Contactor	200-208 or 240 Volt/50 or 60 Hertz/1 or 3 Phase, 200 or 230-240 Volt/50 Hertz/3 Phase and 120 Volt/60 Hertz/1 Phase and 230-240 or 240 Volt/50 Hertz/1 Phase
16	M413758	Contactor Box End	Bottom
17	M413863	Network Capacitor Assembly	3O, 3V, 3X, DO, DV, DX and OM control suffixes
18	M402917	Screw	Ground; Gas and steam models
19	M400044	Screw	4 required; Use with 4 of 23951 Nut to attach item 20
20	M414230P	Transformer	120 Volt; Single secondary; 120 Volt/60 Hertz/1 Phase with CD, CX, CY, MT, QT, SD and SX control suffixes
	M414312P	Transformer	Dual secondary; 120 Volt/60 Hertz/1 Phase with 3O, 3V, 3X, BC, BL, BU, BX, BY, DO, DV, DX, NC, NR, NX, NY, OM, ZC, ZR, ZX and ZY control suffixes
	M414228P	Transformer	Dual secondary; Multitap; 100-240 Volt; 200, 200-208, 230-240 or 240 Volt/50 or 60 Hertz/1 or 3 Phase
21	M411537	Bushing	5/8 inch
22	44028401	Contactor Box Wrapper	
23	51778	Screw	2 required for 200-208 or 240 Volt/50 or 60 Hertz/1 or 3 Phase and 200 or 230-240 Volt/50 Hertz/3 Phase; 4 required for 120 Volt/60 Hertz/1 Phase and 230-240 or 240 Volt/50 Hertz/1 Phase
24	M413542	Terminal Strip	12 circuit

info@zipnaskladem.ru
8(800)500 69-51

© Copyright, Alliance Laundry Systems LLC – DO NOT COPY or TRANSMIT

Contactor Box Assembly (Drawing 2 of 21)

Non-CE Gas, Steam and Electric Nonreversing Models
380, 400-415 or 415 Volt/50 Hertz/3 Phase; 460-480 or 480 Volt/60 Hertz/3 Phase

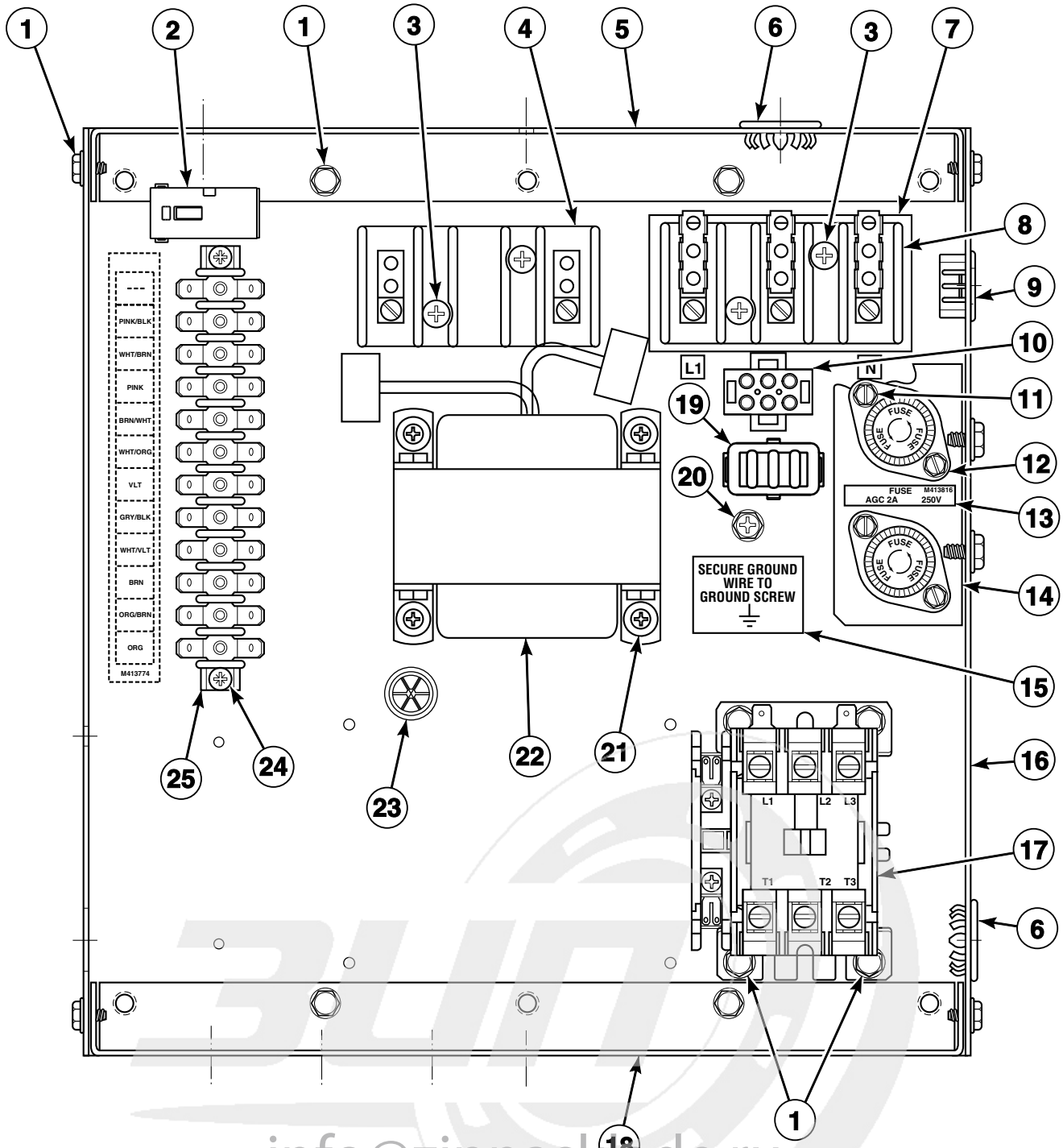

info@zipnasklade.ru
8(800)500-69-51

TMB2718P_70409201

© Copyright, Alliance Laundry Systems LLC – DO NOT COPY or TRANSMIT

Contactor Box Assembly (Drawing 2 of 21)

REF	PART NO.	DESCRIPTION	COMMENTS
	M413508	Jumper Harness Assembly	380 Volt; Use on 380, 400-415 or 415 Volt
	M413509	Jumper Harness Assembly	415 Volt
	M413510	Jumper Configuration Assembly	480 Volt; Use on 460-480 or 480 Volt
	M413683P	Control Box Harness Assembly	
	M413760	Contactor Box Cover	Gas and steam models
	M413856	Electric Accessory Box Cover	Electric models
	44127701	Warning Label	Extended tumble; On cover
1	51780	Screw	18 required
2	M413930P	Ferrite Core Assembly	OM control suffix
3	M405824	Screw	4 required
4	M405364	Terminal Block	2 pole
5	M413757	Contactor Box End	Top
6	M400985	Plug	7/8 inch; 2 required
7	M413862	Insulator	
8	430642	Terminal Block	3 pole
9	M400770	Snap Bushing	7/8 inch; Electric models
10	M413878	Network Capacitor Harness Assembly	3O, 3V, 3X, DO, DV, DX and OM control suffixes
11	501086	Screw	4 required
12	M413544P	Fuse Holder	600 Volt; 2 required
	M413621	Fuse	2 required; 500 Volt; 1/2 Amp
13	M413817	Fuse Sticker	1/2 Amp
14	M413576	Fuse Holder Bracket	
15	M403047	Secure Ground Label	Electrical
16	44028401	Contactor Box Wrapper	
17	M413614P	Fan Contactor	
18	M413758	Contactor Box End	Bottom
19	M413863	Network Capacitor Assembly	3O, 3V, 3X, DO, DV, DX and OM control suffixes
20	M402917	Screw	Ground; Gas and steam models
21	M400044	Screw	4 required; Use with 4 of 23951 Nut to attach item 22
22	M414229P	Transformer	Multitap; 380-480 Volt
	44074401	Transformer	440 Volt; Secondary; Models with the 9th and 10th characters of P1
23	M411537	Bushing	5/8 inch
24	51778	Screw	2 required
25	M413542	Terminal Strip	12 circuit

info@zipnasklade.ru
8(800)500-69-51

© Copyright, Alliance Laundry Systems LLC – DO NOT COPY or TRANSMIT

Contactor Box Assembly (Drawing 3 of 21)

Non-CE Gas, Steam and Electric Reversing Models Except N Models
230-240 or 240 Volt/50 Hertz/1 Phase; 200 Volt/50 Hertz/3 Phase;
200-208 or 240 Volt/50 or 60 Hertz/3 Phase; 230-240 Volt/50 Hertz/3 Phase

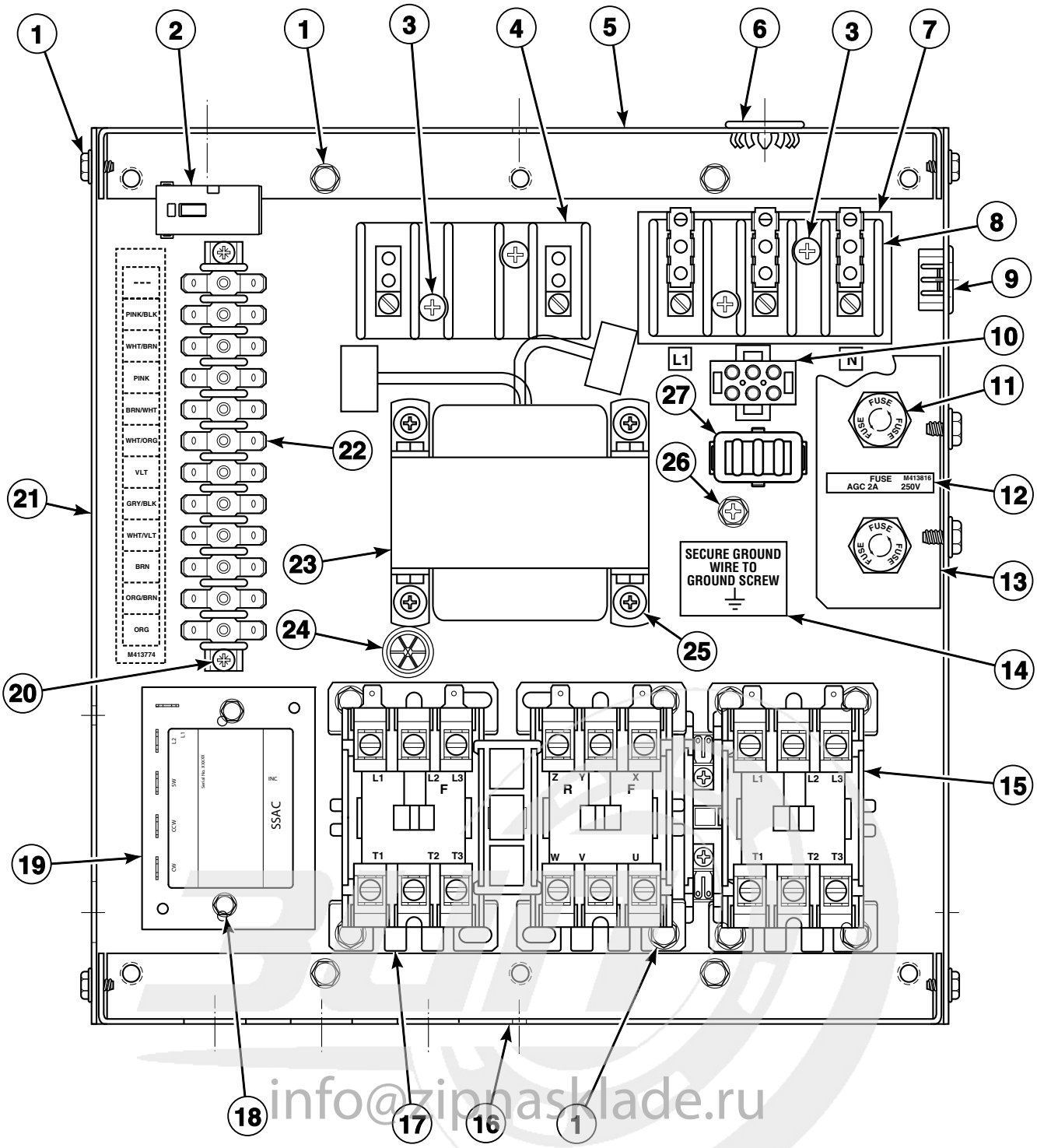

info@zipnashlade.ru
8(800)500-69-51

TMB2719P_70409201

© Copyright, Alliance Laundry Systems LLC – DO NOT COPY or TRANSMIT

Contactor Box Assembly (Drawing 3 of 21)

REF	PART NO.	DESCRIPTION	COMMENTS
	M413760	Contactor Box Cover	Gas and steam models
	M413856	Electric Accessory Box Cover	Electric models
	44127701	Warning Label	Extended tumble; On cover
1	51780	Screw	22 required for 200 Volt/50 Hertz/3 Phase, 200-208 or 240 Volt/50 or 60 Hertz/3 Phase and 230-240 Volt/50 Hertz/3 Phase; 18 required for 230-240 or 240 Volt/50 Hertz/1 Phase
2	M413930P	Ferrite Core Assembly	RM control suffix
3	M405824	Screw	4 required
4	M405364	Terminal Block	2 pole
5	M413757	Contactor Box End	Top
6	M400985	Plug	7/8 inch
7	M413862	Insulator	
8	430642	Terminal Block	3 pole
9	M400770	Snap Bushing	7/8 inch; Electric models
10	M413878	Network Capacitor Harness Assembly	R3, RD and RM control suffixes
11	91024P	Fuse Receptacle	250 Volt; 2 required for 200 Volt/50 Hertz/3 Phase, 200-208 or 240 Volt/50 or 60 Hertz/3 Phase and 230-240 Volt/50 Hertz/3 Phase; 1 required for 230-240 or 240 Volt/50 Hertz/1 Phase
	M413118	Fuse	250 Volt; 2 Amp; 2 required for 200 Volt/50 Hertz/3 Phase, 200-208 or 240 Volt/50 or 60 Hertz/3 Phase and 230-240 Volt/50 Hertz/3 Phase; 1 required for 230-240 or 240 Volt/50 Hertz/1 Phase
12	M413816	Fuse Sticker	2 Amp
13	M413575	Fuse Holder Bracket	
14	M403047	Secure Ground Label	Electrical
15	M413614P	Fan Contactor	200 Volt/50 Hertz/3 Phase, 200-208 or 240 Volt/50 or 60 Hertz/3 Phase, 230-240 Volt/50 Hertz/3 Phase and 230-240 or 240 Volt/50 Hertz/1 Phase
	502501	Relay	24 Volt; 230-240 or 240 Volt/50 Hertz/1 Phase
16	M413758	Contactor Box End	Bottom
17	M413615P	Reversing Contactor	
18	M412105	Screw	2 required; RT control suffix
19	M412081	Reversing Timer	24 Volt; RT control suffix
20	51778	Screw	2 required for 200 Volt/50 Hertz/3 Phase, 200-208 or 240 Volt/50 or 60 Hertz/3 Phase and 230-240 Volt/50 Hertz/3 Phase; 4 required for 230-240 or 240 Volt/50 Hertz/1 Phase
21	44028401	Contactor Box Wrapper	
22	M413542	Terminal Strip	12 circuit
23	M414228P	Transformer	Dual secondary; Multitap; 100-240 Volt
24	M411537	Bushing	5/8 inch
25	M400044	Screw	4 required; Use with 4 of 23951 Nut to attach item 23
26	M402917	Screw	Ground; Gas and steam models
27	M413863	Network Capacitor Assembly	R3, RD and RM control suffixes

info@zipnasklade.ru
8(800)500-69-51

© Copyright, Alliance Laundry Systems LLC – DO NOT COPY or TRANSMIT

Contactor Box Assembly (Drawing 4 of 21)

Non-CE Gas, Steam and Electric Reversing Models Except N Models
380, 400-415 or 415 Volt/50 Hertz/3 Phase; 460-480 or 480 Volt/60 Hertz/3 Phase

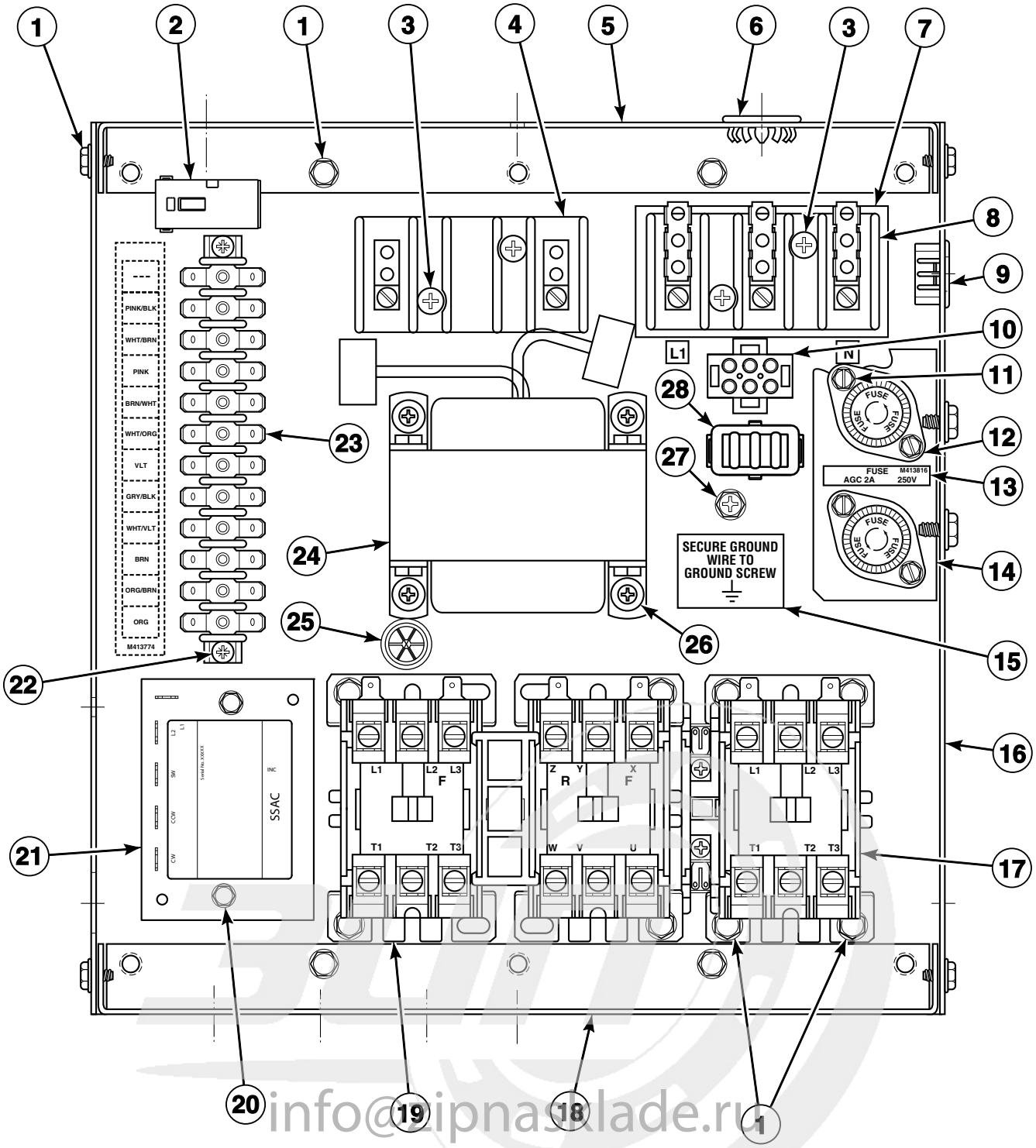

info@zipnasklade.ru
8(800)500-69-51

© Copyright, Alliance Laundry Systems LLC – DO NOT COPY or TRANSMIT

Contactor Box Assembly (Drawing 4 of 21)

REF	PART NO.	DESCRIPTION	COMMENTS
	M413508	Jumper Harness Assembly	380 Volt; 380, 400-415 or 415 Volt/50 Hertz/3 Phase
	M413509	Jumper Harness Assembly	415 Volt
	M413510	Jumper Configuration Assembly	480 Volt; 460-480 or 480 Volt/60 Hertz/3 Phase
	M413684P	Contactor Box Harness Assembly	
	M413168	Bypass Harness Assembly	R3, RD, RM and RQ control suffixes
	M413624	Reversing Contactor Jumper Assembly	Upper; 3 Phase
	44008001	Reversing Timer Harness	RT control suffix
	M413760	Contactor Box Cover	Gas and steam models
	M413856	Electric Accessory Box Cover	Electric models
	44127701	Warning Label	Extended tumble; On cover
1	51780	Screw	22 required
2	M413930P	Ferrite Core Assembly	RM control suffix
3	M413757	Contactor Box End	Top
4	M405824	Screw	4 required
5	M405364	Terminal Block	2 pole
6	M400985	Plug	7/8 inch
7	M413862	Insulator	
8	430642	Terminal Block	3 pole
9	M400770	Snap Bushing	7/8 inch; Electric models
10	M413878	Network Capacitor Harness Assembly	R3, RD and RM control suffixes
11	501086	Screw	4 required
12	M413544P	Fuse Holder	600 Volt; 2 required
	M413621	Fuse	2 required; 500 Volt; 1/2 Amp
13	M413817	Fuse Sticker	1/2 Amp
14	M413576	Fuse Holder Bracket	
15	M403047	Secure Ground Label	Electrical
16	44028401	Contactor Box Wrapper	
17	M413614P	Fan Contactor	
18	M413758	Contactor Box End	Bottom
19	M413615P	Reversing Contactor	
20	M412105	Screw	2 required; RT control suffix
21	M412081	Reversing Timer	24 Volt; RT control suffix
22	51778	Screw	2 required
23	M413542	Terminal Strip	12 circuit
24	M414229P	Transformer	Multitap; 380-480 Volt
	44074401	Transformer	440 Volt; Secondary; Models with the 9th and 10th characters of P1
25	M411537	Bushing	5/8 inch
26	M400044	Screw	4 required; Use with 4 of 23951 Nut to attach item 24
27	M402917	Screw	Ground; Gas and steam models
28	M413863	Network Capacitor Assembly	R3, RD and RM control suffixes

info@zipnasklade.ru
8(800)500-69-51

© Copyright, Alliance Laundry Systems LLC – DO NOT COPY or TRANSMIT

Contactor Box Assembly (Drawing 5 of 21)

CE Gas and Steam Models Except K and L Models
Models with MT and QT Control Suffixes and SD and SX Control Suffixes Starting 1/1/07;
230 Volt/50 Hertz/1 Phase

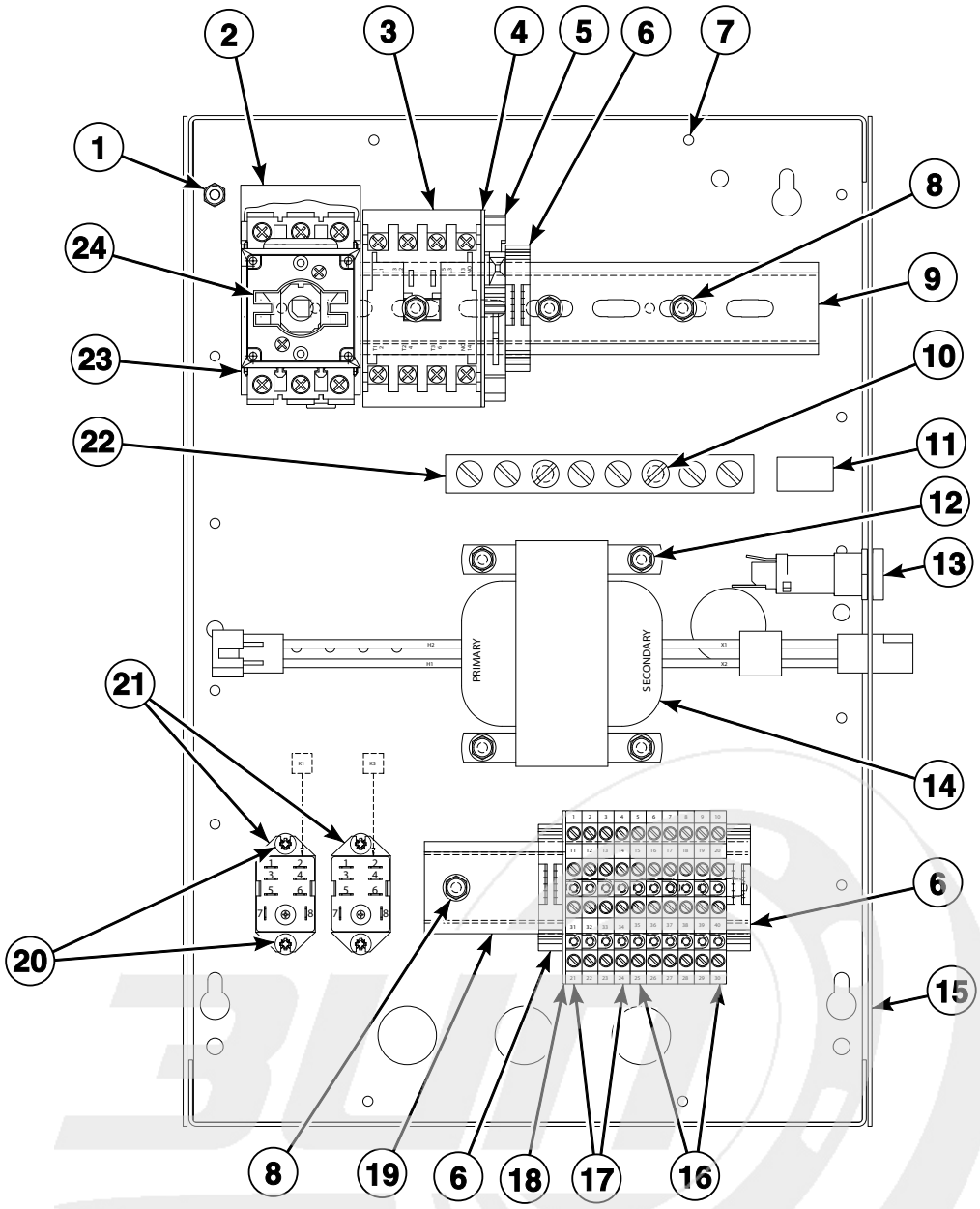

info@zipnasklade.ru
8(800)500-69-51

© Copyright, Alliance Laundry Systems LLC – DO NOT COPY or TRANSMIT

Contactor Box Assembly (Drawing 5 of 21)

REF	PART NO.	DESCRIPTION	COMMENTS
	M412636	Relay Harness Assembly	K1, K2, K3
	M412641	Transformer Harness Assembly	Secondary
	M412642	Transformer Harness Assembly	Primary; 240 Volt
	M412650	Junction Box Cover	Use 2 of M400713 Drive Rivet to secure cover to junction box; Use M412368 Door Interlock to mount M412208 Handle to cover
	44127701	Warning Label	Extended tumble; On junction box cover
1	430497	Screw	18 required; To secure junction box to backplane
2	M412366	Finger Guard	20 Amp
3	70323701P	Contactor	9 Amp
4	M412540	End Section	
5	M412537	Terminal Block	230 Volt primary; Use 502593 Fuse
6	70121001	End Stop	230 Volt; 3 required
7	N/A	Junction Box Bottom	
8	51780	Screw	5 required
9	N/A	Din Rail	
10	M412688	Nut	2 required
11	M412096	Earth Terminal Sticker	
12	33562	Screw	4 required
13	502591P	Fuse Holder Kit	Includes 502591 Fuse Holder Body and 502811 Fuse Carrier
	502592	Fuse	
14	M412477P	Transformer	240 Volt
15	M412649	Junction Box Side	2 required
16	M412631	Terminal Block	2 circuit; 6 required
17	M412632	Terminal Block	1 circuit; 4 required
18	M412633	End Barrier	
19	N/A	Din Rail	
20	501086	Screw	4 required
21	M412534	Relay	24 Volt; 2 required
22	M412656	Ground Buss Assembly	
23	M412187P	Mounting Switch Base	20 Amp
24	M412370	Extension Handle	20 Amp; Includes screws

N/A = Part no longer available

info@zipnasklade.ru
8(800)500-69-51

© Copyright, Alliance Laundry Systems LLC – DO NOT COPY or TRANSMIT

Contactor Box Assembly (Drawing 6 of 21)

CE Gas and Steam Reversing Models
230 Volt/50 Hertz/1 Phase

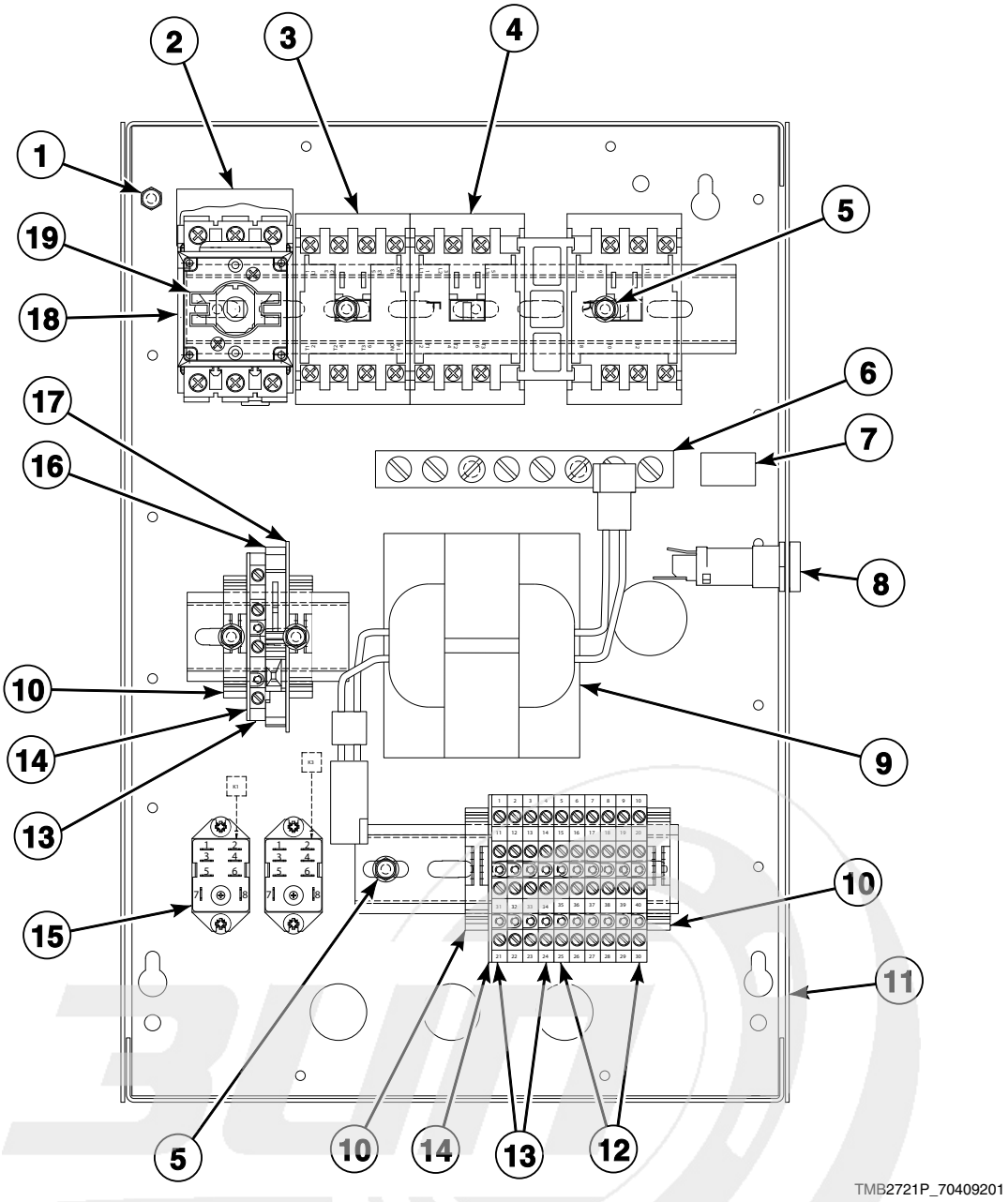

info@zipnasklade.ru
8(800)500-69-51

© Copyright, Alliance Laundry Systems LLC – DO NOT COPY or TRANSMIT

Contactor Box Assembly (Drawing 6 of 21)

REF	PART NO.	DESCRIPTION	COMMENTS
	M412636	Relay Harness Assembly	Gas models; RT control suffix
	M414224	Relay Harness Assembly	Gas models; R3, RD, RM and RQ control suffixes
	M414032	Relay Harness Assembly	Steam models; R3, RD, RM and RQ control suffixes
	M412641	Transformer Harness Assembly	Secondary; RQ and RT control suffixes
	M412642	Transformer Harness Assembly	Primary; 240 Volt; RQ and RT control suffixes
	M414076	Transformer Harness Assembly	Primary; R3, RD and RM control suffixes
	M414029	Transformer Harness Assembly	Secondary; R3, RD and RM control suffixes
	44043101	Transformer Harness	Secondary; R3 and RD control suffixes
	M413507	Jumper Configuration Assembly	240 Volt
	M413506	Jumper Harness Assembly	208 Volt
	M413863	Network Capacitor Assembly	R3, RD and RM control suffixes
	M414034	Reversing Contactor Harness Assembly	R3, RD, RM and RQ control suffixes
	M412927	Reversing Jumper Harness Assembly	Lower
	M412650	Junction Box Cover	Use 2 of M400713 Drive Rivet to secure cover to junction box; Use M412368 Door Interlock to mount M412208 Handle to cover
	44127701	Warning Label	Extended tumble; On junction box cover
1	430497	Screw	18 required; To secure junction box to backplane
2	M412366	Finger Guard	20 Amp
3	70323701P	Contactor	9 Amp
4	M412405P	Reversing Contactor	
5	51780	Screw	6 required
6	M412656	Ground Buss Assembly	Use 2 of M412688 Nut to attach
7	M412096	Earth Terminal Sticker	
8	502591P	Fuse Holder Kit	Includes 502591 Fuse Holder Body and 502811 Fuse Carrier
	502592	Fuse	RQ and RT control suffixes
	M413889	Fuse	4 Amp; R3, RD and RM control suffixes
9	M412477P	Transformer	Multitap; 230 Volt; RQ and RT control suffixes; Use 4 of 33562 Screw to attach
	M414228P	Transformer	Dual secondary; Multitap; 100-240 Volt; R3, RD and RM control suffixes; Use 4 of M400044 Screw and 4 of 23951 Nut to attach
10	70121001	End Stop	230 Volt; 4 required
11	M412649	Junction Box Side	2 required
12	M412631	Terminal Block	2 circuit; 6 required
13	M412632	Terminal Block	1 circuit; 4 required
14	M412633	End Barrier	2 required
15	M412534	Relay	24 Volt; 1 required, using 2 of 501086 Screw for RQ and RT control suffixes and 2 of M400071 Screw for R3, RD and RM control suffixes for steam models; 2 required, using 4 of 501086 Screw for RQ and RT control suffixes and 4 of M400071 Screw for R3, RD and RM control suffixes for gas models
16	M412537	Terminal Block	230 Volt; Primary; Use 502593 or M413867 Fuse
17	M412540	End Section	
18	M412187P	Mounting Switch Base	20 Amp
19	M412370	Extension Handle	20 Amp

info@zipnaskladu.ru
8(800)500-69-51

© Copyright, Alliance Laundry Systems LLC – DO NOT COPY or TRANSMIT

Contactor Box Assembly (Drawing 7 of 21)

CE Gas C, H, P and S Models
Models with CD, CX and CY Control Suffixes;
230 Volt/50 Hertz/1 Phase

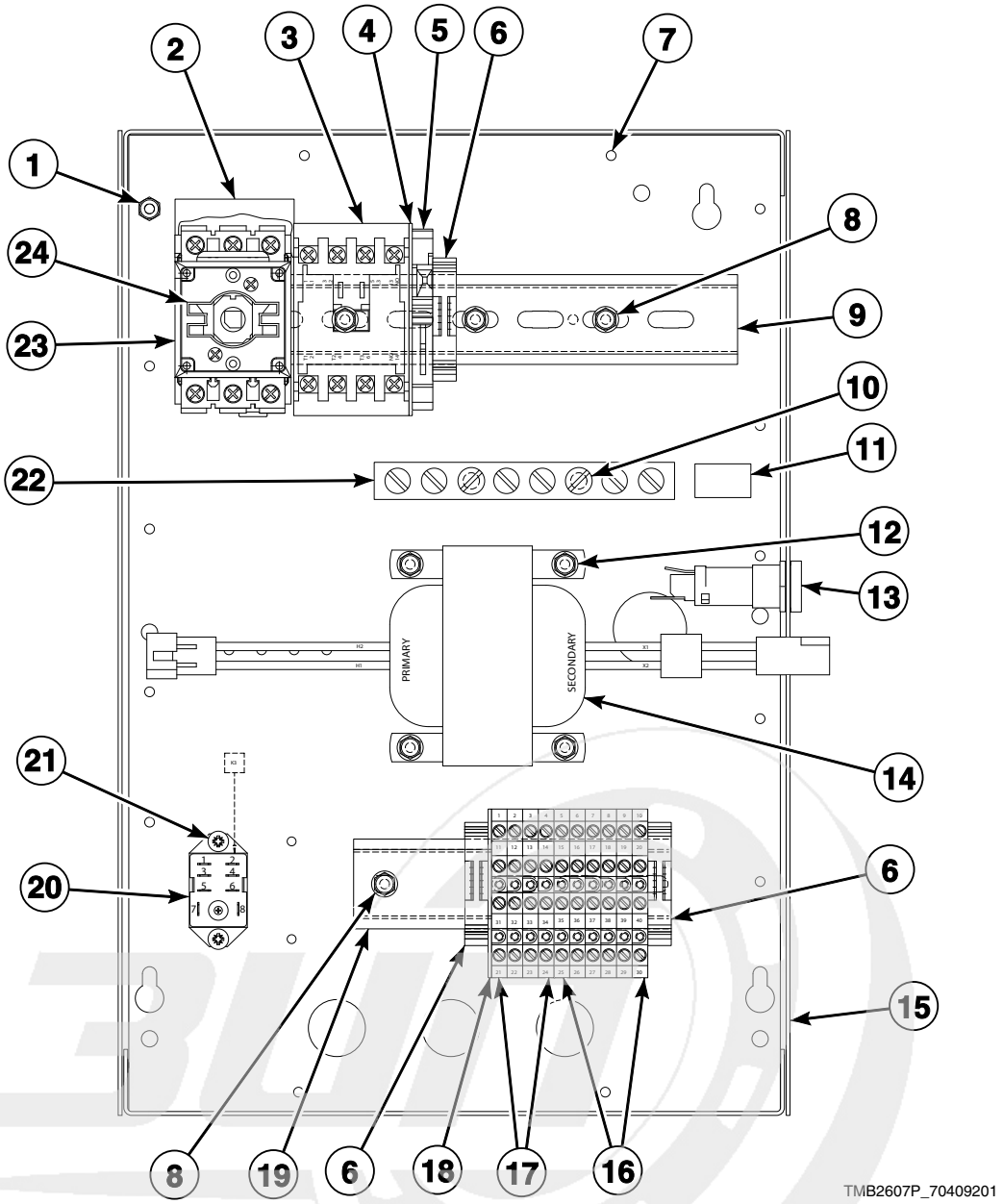

info@zipnasklade.ru
8(800)500-69-51

© Copyright, Alliance Laundry Systems LLC – DO NOT COPY or TRANSMIT

Contactor Box Assembly (Drawing 7 of 21)

REF	PART NO.	DESCRIPTION	COMMENTS
	44010701	Gas Relay Harness	
	M412641	Transformer Harness Assembly	Secondary
	M412642	Transformer Harness Assembly	Primary; 240 Volt
	M412650	Junction Box Cover	Use 2 of M400713 Drive Rivet to secure cover to junction box; Use M412368 Door Interlock to mount M412208 Handle to cover
	44127701	Warning Label	Extended tumble; On junction box cover
1	430497	Screw	18 required; To secure junction box to backplane
2	M412366	Finger Guard	20 Amp
3	70323701P	Contactor	9 Amp
4	M412540	End Section	
5	M412537	Terminal Block	Primary; Use 502593 Fuse
6	70121001	End Stop	3 required
7	N/A	Junction Box Bottom	
8	51780	Screw	5 required
9	N/A	Din Rail	
10	M412688	Nut	2 required
11	M412096	Earth Terminal Sticker	
12	33562	Screw	
13	502591P	Fuse Holder Kit	Includes 502591 Fuse Holder Body and 502811 Fuse Carrier
	502592	Fuse	3.15 Amp
14	M412477P	Transformer	230 Volt
15	M412649	Junction Box Side	2 required
16	M412631	Terminal Block	2 circuit; 6 required
17	M412632	Terminal Block	1 circuit; 4 required
18	M412633	End Barrier	
19	N/A	Din Rail	
20	M412534	Relay	
21	501086	Screw	2 required
22	M412656	Ground Buss Assembly	
23	M412187P	Mounting Switch Base	20 Amp
24	M412370	Extension Handle	20 Amp

N/A = Part no longer available

info@zipnasklade.ru
8(800)500-69-51

© Copyright, Alliance Laundry Systems LLC – DO NOT COPY or TRANSMIT

Contactor Box Assembly (Drawing 8 of 21)

CE Gas and Steam Models Except Y Models
Models with 3O, 3V, 3X, BC, BL, BU, BX, BY, DO, DV, DX, NC, NR, NX, NY,
OM, ZC, ZR, ZX and ZY Control Suffixes and SD and SX Control Suffixes Through 12/31/06;
230 Volt/50 Hertz/1 Phase

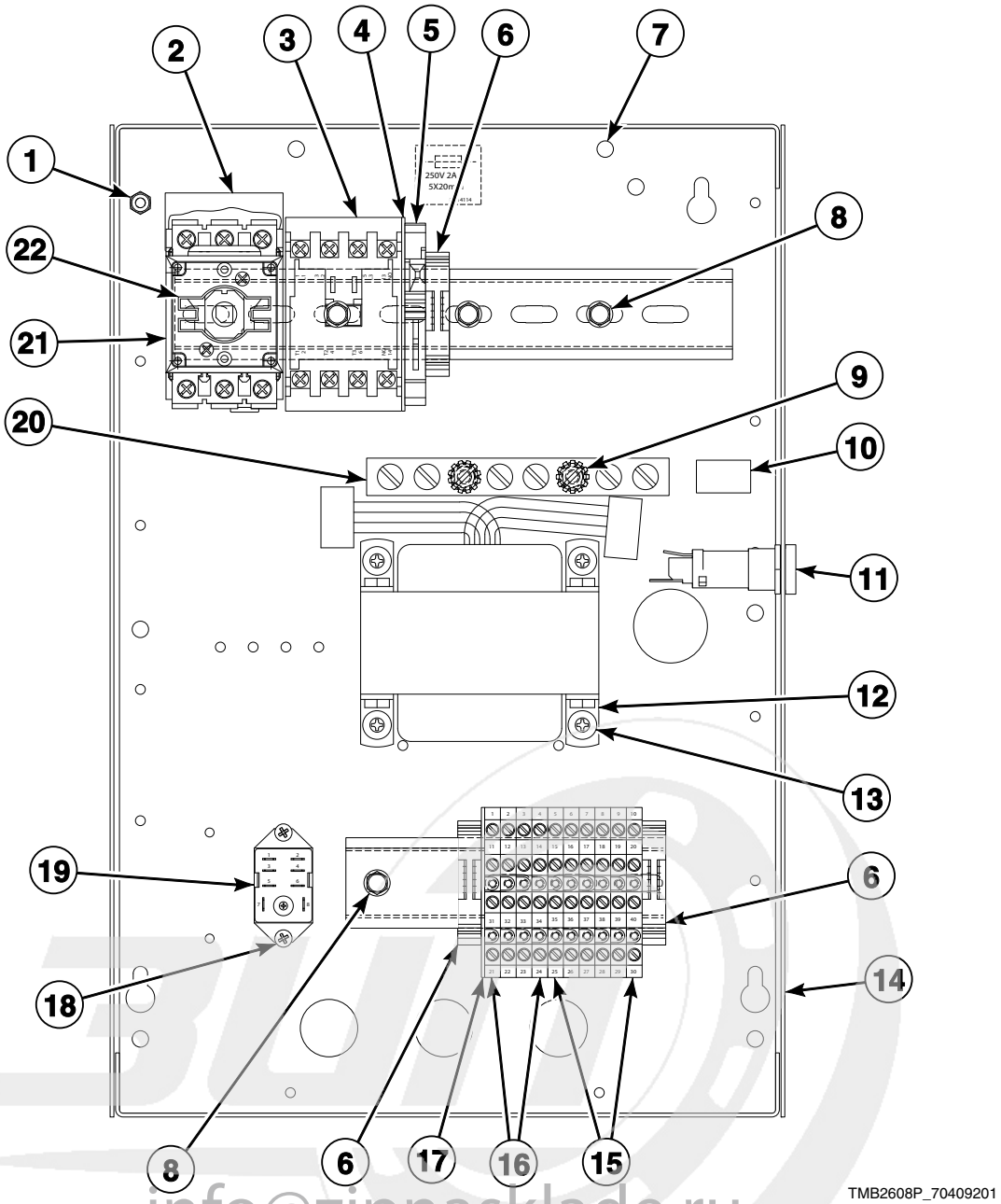

info@zipnasklade.ru
8(800)500-69-51

© Copyright, Alliance Laundry Systems LLC – DO NOT COPY or TRANSMIT

Contactor Box Assembly (Drawing 8 of 21)

REF	PART NO.	DESCRIPTION	COMMENTS
	M413863	Network Capacitor Assembly	3O, 3V, 3X, DO, DV, DX and OM control suffixes
	M414224	Relay Harness Assembly	Gas models; 3O, 3V, 3X, BC, BL, BU, BX, BY, DO, DV, DX, OM, SD and SX control suffixes
	M414032	Relay Harness Assembly	Steam models
	M414076	Transformer Harness Assembly	Primary; 3O, 3V, 3X, BC, BL, BU, BX, BY, DO, DV, DX, OM, SD and SX control suffixes
	M414029	Transformer Harness Assembly	Secondary; 3O, 3V, 3X, BC, BL, BU, BX, BY, DO, DV, DX, OM, SD and SX control suffixes
	44010701	Gas Relay Harness	
	M413506	Jumper Harness Assembly	208 Volt; 3O, 3V, 3X, BC, BL, BU, BX, BY, DO, DV and DX control suffixes
	M413507	Jumper Configuration Assembly	240 Volt; Gas models with OM control suffix; Steam models
	44043101	Transformer Harness	Secondary; C and D models; DO, DV and DX control suffixes
	M412650	Junction Box Cover	Use 2 of M400713 Drive Rivet to secure cover to junction box; Use M412368 Door Interlock to mount M412208 Handle to cover
	44127701	Warning Label	Extended tumble; On junction box cover
1	430497	Screw	18 required; To secure junction box to backplane
2	M412366	Finger Guard	20 Amp
3	70323701P	Contactor	9 Amp
4	M412540	End Section	
5	M412537	Terminal Block	Primary; Use M413867 Fuse
6	70121001	End Stop	3 required
7	N/A	Junction Box Bottom	
8	51780	Screw	5 required
9	M412688	Nut	2 required
10	M412096	Earth Terminal Sticker	
11	502591P	Fuse Holder Kit	Includes 502591 Fuse Holder Body and 502811 Fuse Carrier
	M413889	Fuse	4 Amp
12	M414228P	Transformer	Dual secondary; Multitap; 100-240 Volt
13	M400044	Screw	4 required; Use with 4 of 23951 Nut to attach item 12
14	M412649	Junction Box Side	2 required
15	M412631	Terminal Block	2 circuit; 6 required
16	M412632	Terminal Block	1 circuit; 4 required
17	M412633	End Barrier	
18	M400071	Screw	2 required; Gas models
19	M412534	Relay	24 Volt; Gas models
20	M412656	Ground Buss Assembly	
21	M412187P	Mounting Switch Base	20 Amp
22	M412370	Extension Handle	20 Amp

N/A = Part no longer available

info@zipnasklade.ru
8(800)500-69-51

© Copyright, Alliance Laundry Systems LLC – DO NOT COPY or TRANSMIT

Contactor Box Assembly (Drawing 9 of 21)

CE Gas and Steam C, H, S, U and Y Models
Models with QT Control Suffix and SD and SX Control Suffixes Starting 1/1/07;
230 Volt/50 Hertz/1 Phase

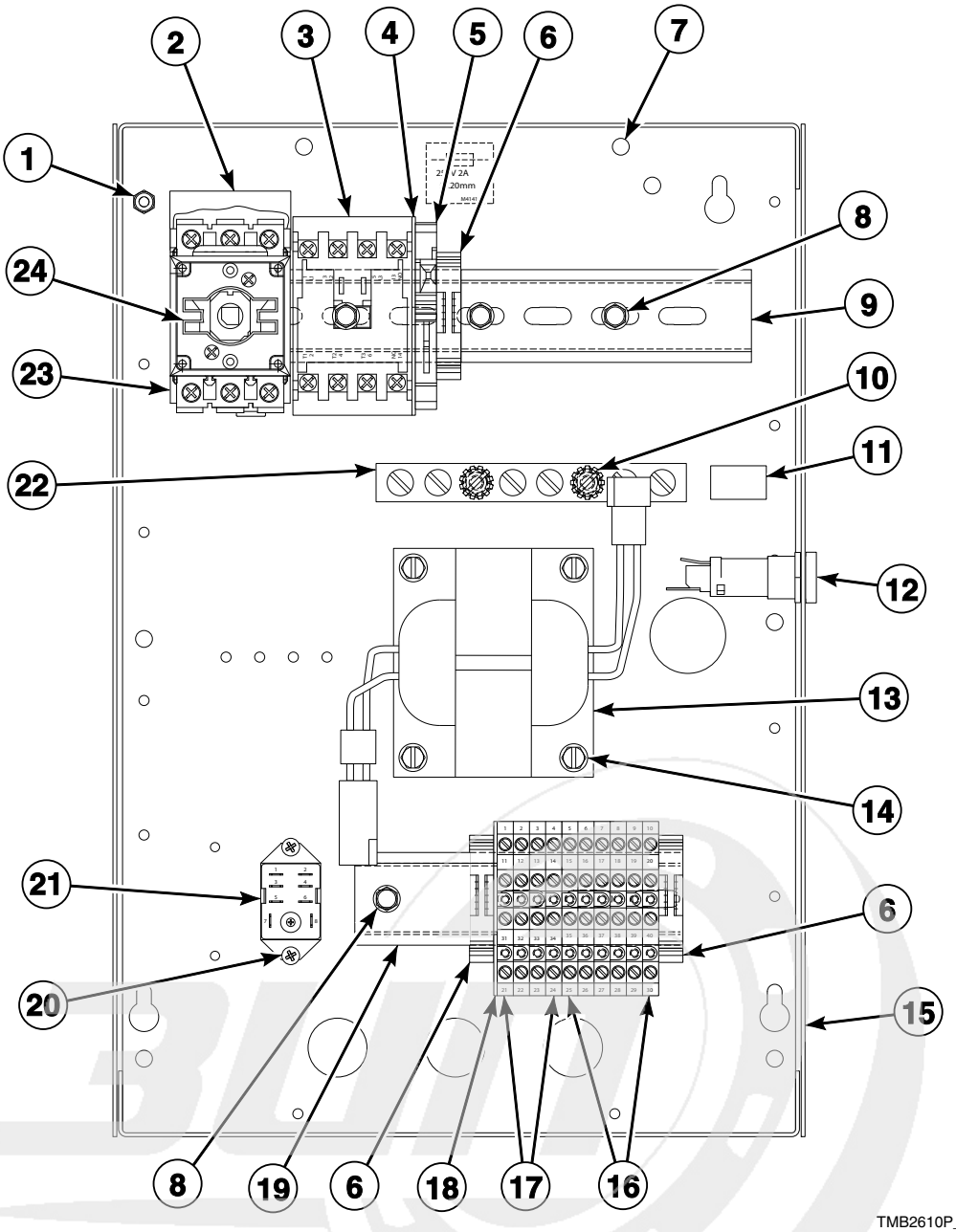

info@zipnasklade.ru
8(800)500-69-51

© Copyright, Alliance Laundry Systems LLC – DO NOT COPY or TRANSMIT

Contactor Box Assembly (Drawing 9 of 21)

REF	PART NO.	DESCRIPTION	COMMENTS
	M414224	Relay Harness Assembly	Gas models
	M414032	Relay Harness Assembly	Steam models
	M412642	Transformer Harness Assembly	Primary
	M412641	Transformer Harness Assembly	Secondary
	M414224	Relay Harness Assembly	SD and SX control suffixes
	M413506	Jumper Harness Assembly	208 or 240 Volt
	M412650	Junction Box Cover	Use 2 of M400713 Drive Rivet to secure cover to junction box; Use M412368 Door Interlock to mount M412208 Handle to cover
	44127701	Warning Label	Extended tumble; On junction box cover
1	430497	Screw	17 required; To secure junction box to backplane
2	M412366	Finger Guard	20 Amp
3	70323701P	Contactor	9 Amp
4	M412540	End Section	
5	M412537	Terminal Block	Primary; Use 502593 Fuse
6	70121001	End Stop	3 required
7	N/A	Junction Box Bottom	
8	51780	Screw	4 required
9	N/A	Din Rail	
10	M412688	Nut	2 required
11	M412096	Earth Terminal Sticker	
12	502591P	Fuse Holder Kit	Includes 502591 Fuse Holder Body and 502811 Fuse Carrier
	M413889	Fuse	4 Amp
13	M412477P	Transformer	Multitap; 100-240 Volt
14	33562	Screw	4 required
15	M412649	Junction Box Side	2 required
16	M412631	Terminal Block	2 circuit; 6 required
17	M412632	Terminal Block	1 circuit; 4 required
18	M412633	End Barrier	
19	N/A	Din Rail	
20	501086	Screw	2 required; Gas models
21	M412534	Relay	24 Volt; Gas models
22	M412656	Ground Buss Assembly	
23	M412187P	Mounting Switch Base	20 Amp
24	M412370	Extension Handle	20 Amp

N/A = Part no longer available

info@zipnasklade.ru
8(800)500-69-51

© Copyright, Alliance Laundry Systems LLC – DO NOT COPY or TRANSMIT

Contactor Box Assembly (Drawing 10 of 21)

CE Gas and Steam C, H, S, U and Y Models
Models with QT and RQ Control Suffixes and SD and SX Control Suffixes Starting 1/1/07;
380 or 400-415 Volt/50 Hertz/3 Phase

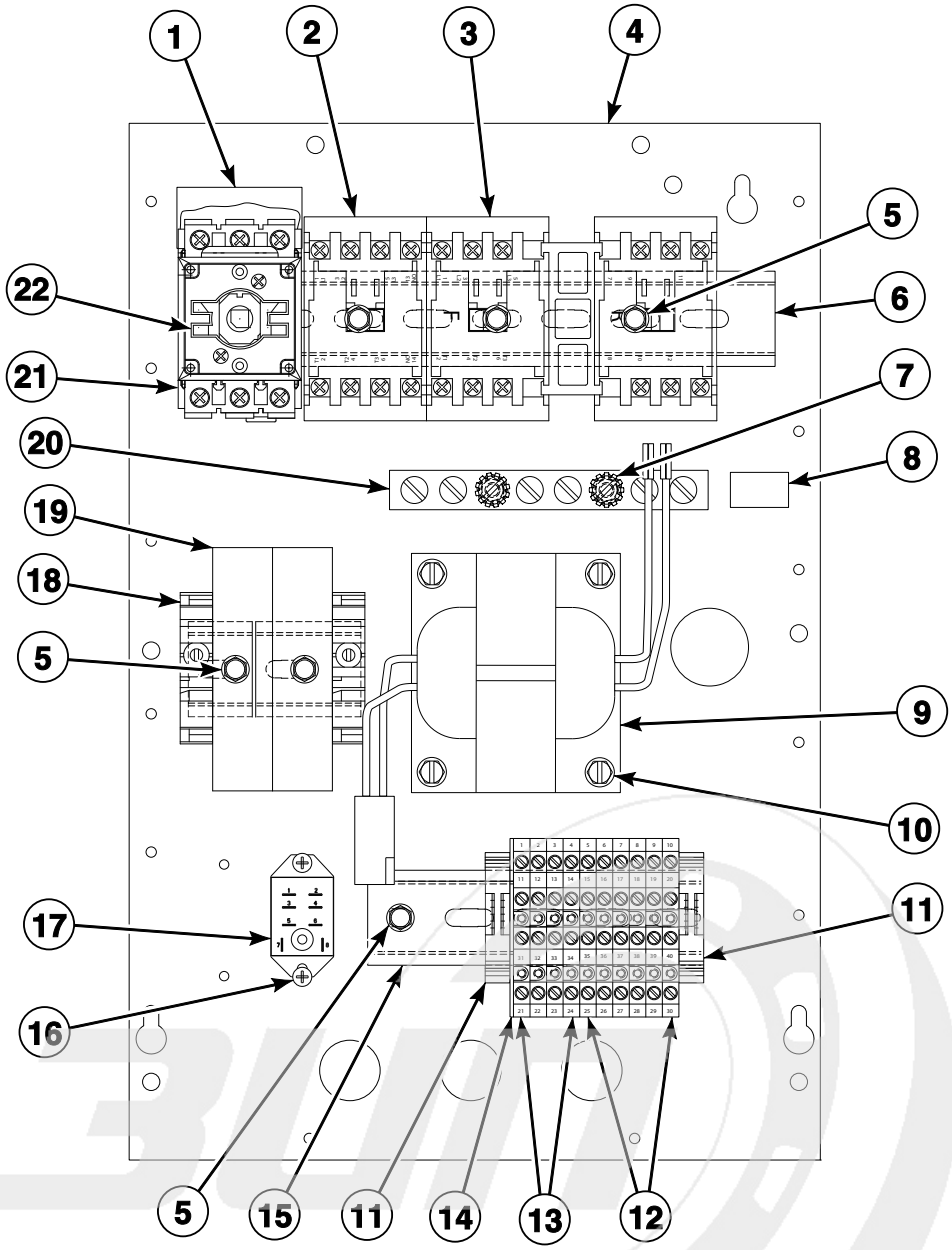

info@zipnasklade.ru
8(800)500-69-51

© Copyright, Alliance Laundry Systems LLC – DO NOT COPY or TRANSMIT

Contactor Box Assembly (Drawing 10 of 21)

REF	PART NO.	DESCRIPTION	COMMENTS
	M414224	Relay Harness Assembly	Gas models
	M414032	Relay Harness Assembly	Steam models
	M412641	Transformer Harness Assembly	Secondary
	M412928	Reversing Jumper Harness Assembly	Upper; 2 required; RQ control suffix
	M412929	Reversing Jumper Harness Assembly	Lower; RQ control suffix
	M414034	Reversing Contactor Harness Assembly	RQ control suffix
	M412650	Junction Box Cover	
	44127701	Warning Label	Extended tumble; On junction box cover
1	M412366	Finger Guard	20 Amp
2	70323701P	Contactor	9 Amp
3	M412405P	Reversing Contactor	RQ control suffix
4	N/A	Junction Box Bottom	
5	51780	Screw	7 required
6	N/A	Din Rail	
7	M412688	Nut	2 required
8	M412096	Earth Terminal Sticker	
9	M412412P	Transformer	
10	33562	Screw	4 required; Use with 4 of 23951 Nut to attach item 9
11	70121001	End Stop	2 required
12	M412631	Terminal Block	2 circuit; 6 required
13	M412632	Terminal Block	1 circuit; 4 required
14	M412633	End Barrier	
15	N/A	Din Rail	
16	M400071	Screw	Gas models
17	M412534	Relay	Gas models
18	M412615	End Stop	2 required
19	M412538	Terminal Block	400 Volt; Primary; 2 required; Use M412996 Fuse
20	M412656	Ground Buss Assembly	
21	M412187P	Mounting Switch Base	20 Amp
22	M412370	Extension Handle	20 Amp

N/A = Part no longer available

info@zipnasklade.ru
8(800)500-69-51

© Copyright, Alliance Laundry Systems LLC – DO NOT COPY or TRANSMIT

Contactor Box Assembly (Drawing 11 of 21)

CE Steam Models Except G, K and L Models
Models with MT, QT, RQ and RT Control Suffixes and SD and SX Control Suffixes Starting 1/1/07;
380 or 400-415 Volt/50 Hertz/3 Phase

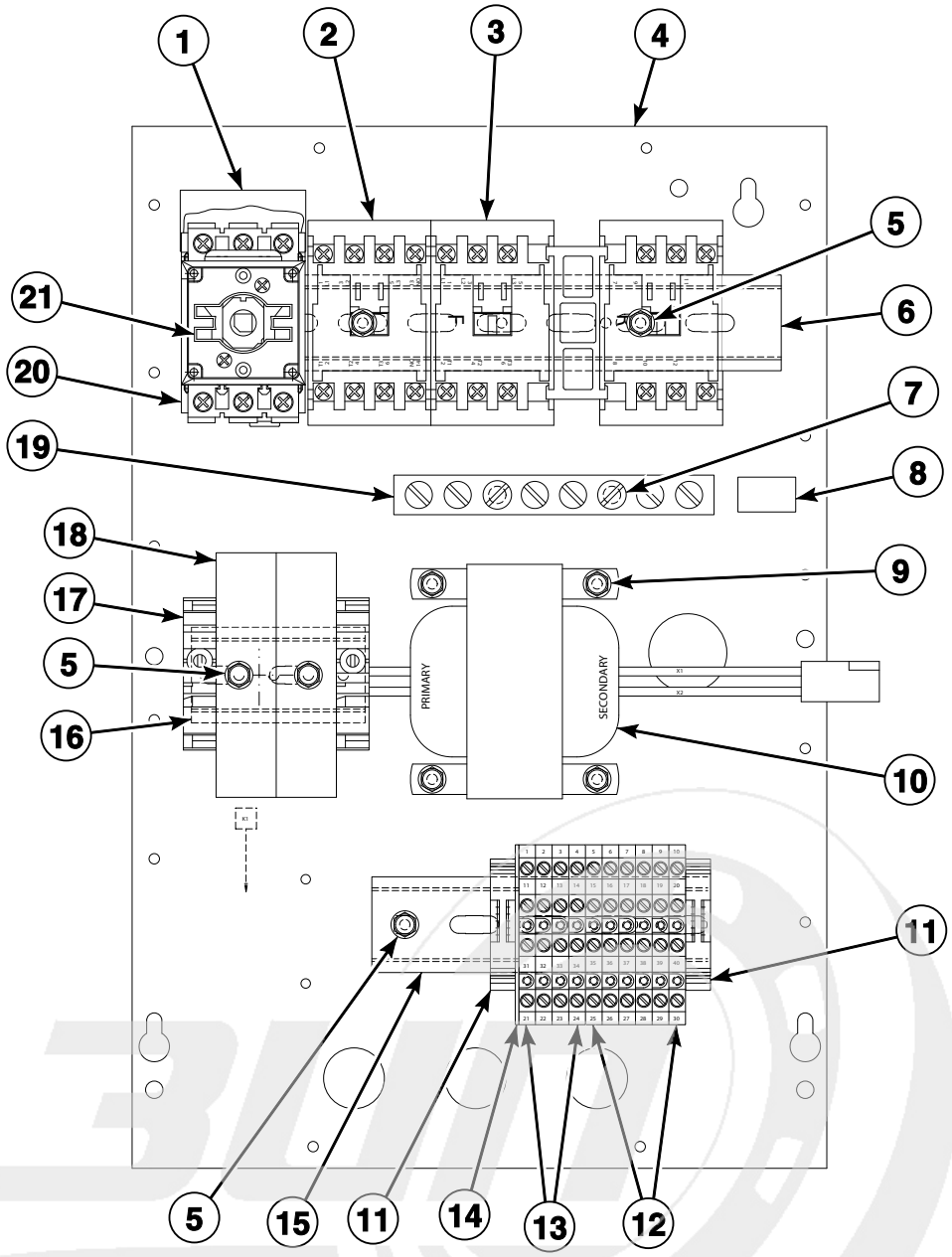

info@zipnasklade.ru
8(800)500-69-51

© Copyright, Alliance Laundry Systems LLC – DO NOT COPY or TRANSMIT

Contactor Box Assembly (Drawing 11 of 21)

REF	PART NO.	DESCRIPTION	COMMENTS
	M412641	Transformer Harness Assembly	Secondary
	M412928	Reversing Jumper Harness Assembly	Upper; 2 required; RQ and RT control suffixes
	M412929	Reversing Jumper Harness Assembly	Lower; RQ and RT control suffixes
	M412650	Junction Box Cover	
	44127701	Warning Label	Extended tumble; On junction box cover
1	M412366	Finger Guard	20 Amp
2	70323701P	Contactor	9 Amp
3	M412405P	Reversing Contactor	RQ and RT control suffixes
4	N/A	Junction Box Bottom	
5	51780	Screw	7 required
6	N/A	Din Rail	
7	M412688	Nut	2 required
8	M412096	Earth Terminal Sticker	
9	33562	Screw	4 required
10	M412412P	Transformer	400 Volt
11	70121001	End Stop	2 required
12	M412631	Terminal Block	2 circuit; 6 required
13	M412632	Terminal Block	1 circuit; 4 required
14	M412633	End Barrier	
15	N/A	Din Rail	
16	N/A	Din Rail	
17	M412615	End Stop	2 required
18	M412538	Terminal Block	400 Volt; Primary; 2 required; Use M412996 Fuse
19	M412656	Ground Buss Assembly	
20	M412187P	Mounting Switch Base	20 Amp
21	M412370	Extension Handle	20 Amp

N/A = Part no longer available

info@zipnasklade.ru
8(800)500-69-51

© Copyright, Alliance Laundry Systems LLC – DO NOT COPY or TRANSMIT

Contactor Box Assembly (Drawing 12 of 21)

CE Steam Models Except Y Models
Models with 3O, 3V, 3X, DO, DV, DX, OM, R3, RD and RM Control Suffixes;
380 or 400-415 Volt/50 Hertz/3 Phase

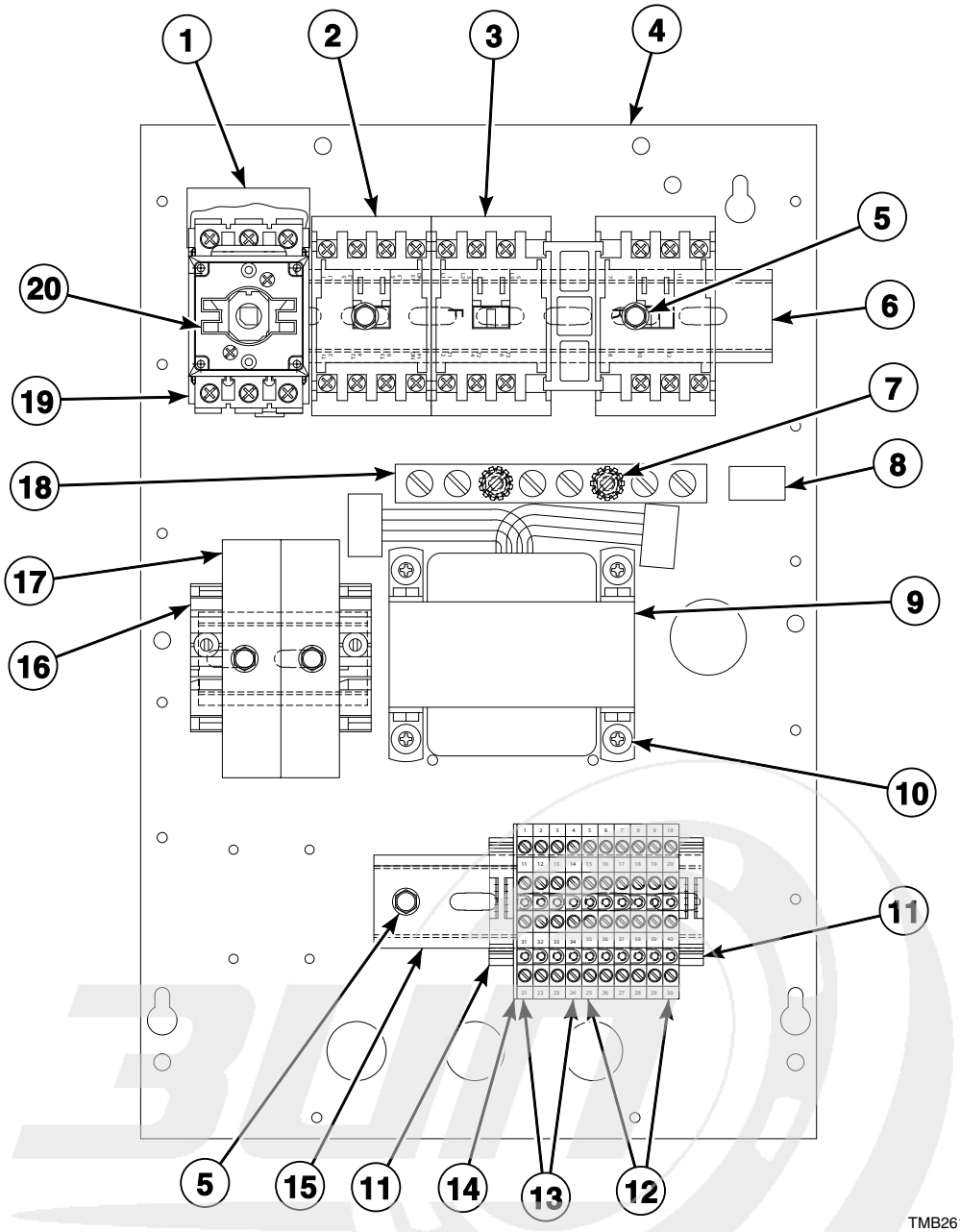

TMB2618P_70409201

info@zipnasklade.ru
8(800)500-69-51

© Copyright, Alliance Laundry Systems LLC – DO NOT COPY or TRANSMIT

Contactor Box Assembly (Drawing 12 of 21)

REF	PART NO.	DESCRIPTION	COMMENTS
	M414032	Relay Harness Assembly	
	M414028	Transformer Harness Assembly	Primary
	M414029	Transformer Harness Assembly	Secondary; 3O, 3V, 3X, DV, DX, OM, R3 and RM control suffixes
	44043101	Transformer Harness	Secondary; DO, DV, DX and RD control suffixes
	M414077	Jumper Wire	
	M413508	Jumper Harness Assembly	380 Volt
	M412928	Reversing Jumper Harness Assembly	Upper; 2 required; R3, RD and RM control suffixes
	M412929	Reversing Jumper Harness Assembly	Lower; R3, RD and RM control suffixes
	M414034	Reversing Contactor Harness Assembly	R3, RD and RM control suffixes
	M413863	Network Capacitor Assembly	
	M412650	Junction Box Cover	
	44127701	Warning Label	Extended tumble; On junction box cover
1	M412366	Finger Guard	20 Amp
2	70323701P	Contactor	9 Amp
3	M412405P	Reversing Contactor	R3, RD and RM control suffixes
4	N/A	Junction Box Bottom	
5	51780	Screw	7 required
6	N/A	Din Rail	
7	M412688	Nut	2 required
8	M412096	Earth Terminal Sticker	
9	M414229P	Transformer	
10	M400044	Screw	4 required; Use with 4 of 23951 Nut to attach item 9
11	70121001	End Stop	230 Volt; 2 required
12	M412631	Terminal Block	2 circuit; 6 required
13	M412632	Terminal Block	1 circuit; 4 required
14	M412633	End Barrier	
15	N/A	Din Rail	
16	M412615	End Stop	2 required
17	M412538	Terminal Block	400 Volt; Primary; 2 required; Use M413621 Fuse
18	M412656	Ground Buss Assembly	
19	M412187P	Mounting Switch Base	20 Amp
20	M412370	Extension Handle	20 Amp

N/A = Part no longer available

info@zipnasklade.ru
8(800)500-69-51

© Copyright, Alliance Laundry Systems LLC – DO NOT COPY or TRANSMIT

Contactor Box Assembly (Drawing 13 of 21)

CE Electric Models Except G, K and L Models
Models with CD, CX, CY, MT, QT, RQ and RT Control Suffixes and SD and SX Control Suffixes Starting 1/1/07;
230 Volt/50 Hertz/3 Phase

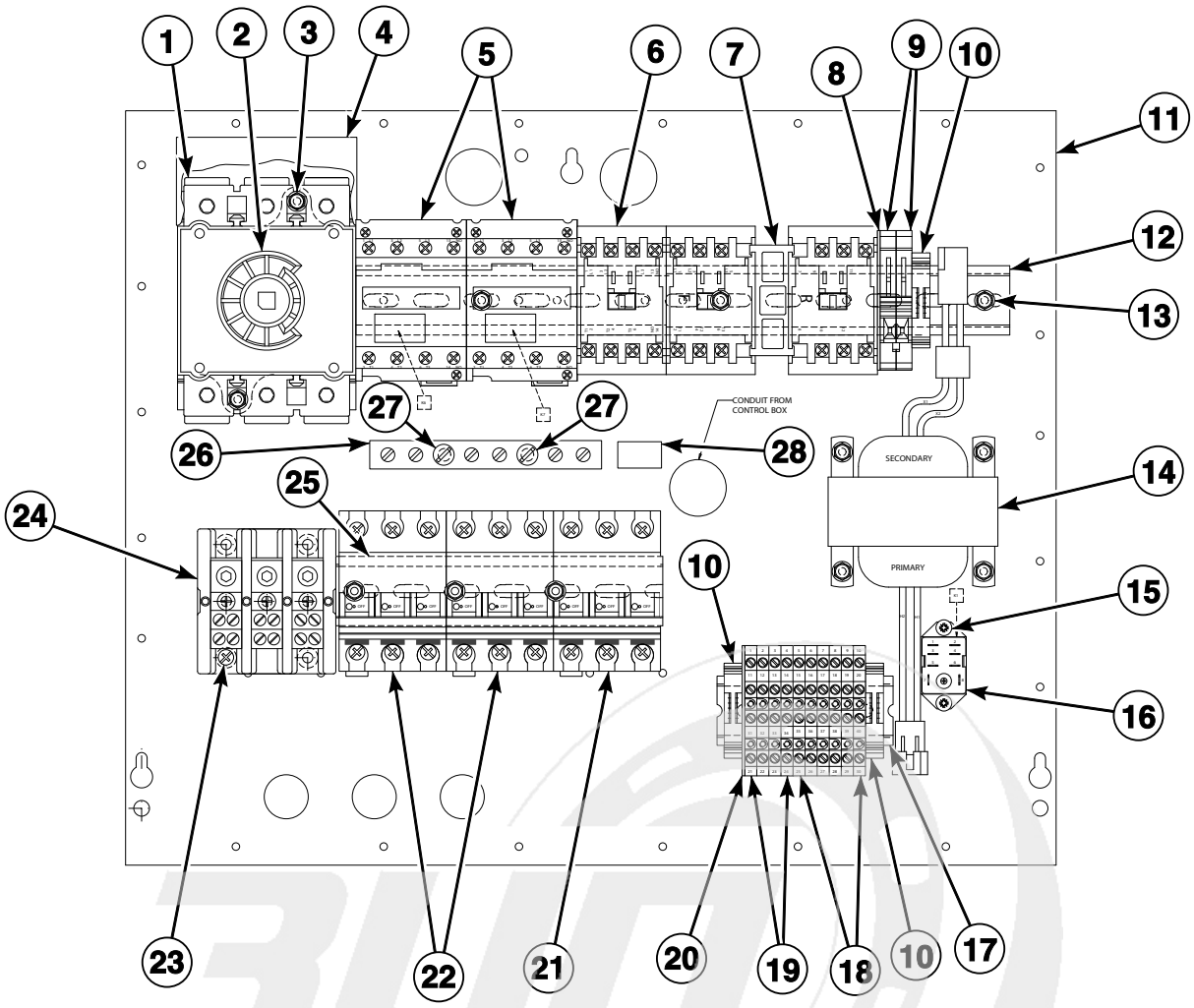

TMB2621P_70409201

info@zipnasklade.ru
8(800)500-69-51

© Copyright, Alliance Laundry Systems LLC – DO NOT COPY or TRANSMIT

Contactor Box Assembly (Drawing 13 of 21)

REF	PART NO.	DESCRIPTION	COMMENTS
	M412776P	Relay Harness Assembly	MT and RT control suffixes
	M412777	Relay Harness Assembly	CD, CX and CY control suffixes
	M414149	Relay Harness Assembly	QT, RQ and SD control suffixes
	M412641	Transformer Harness Assembly	Secondary
	M412642	Transformer Harness Assembly	Primary
	M412871	Jumper Harness Assembly	240 Volt
	M412740	Jumper Cable Wire	8 gauge; 6 required
	M412928	Reversing Jumper Harness Assembly	Upper; 2 required; RQ and RT control suffixes
	M412929	Reversing Jumper Harness Assembly	Lower; RQ and RT control suffixes
	44014501	Jumper Wire	3 required
	44014601	Jumper Wire	3 required
	44014701	Jumper Wire	3 required
	M413934	Jumper Cable Assembly	3 required
	44014901P	Power Distribution Block Cover	Includes 2 screws; Use with item 24
	M412265	Contactor Box Cover	
	44127701	Warning Label	Extended tumble; On contactor box cover
1	M412186	Mounting Switch Base	100 Amp
2	M412371P	Extension Handle	100 Amp
3	33562	Screw	6 required
4	M412367	Finger Guard	100 Amp
5	70343301P	Contactor	Electric; 50 Amp; 2 required
6	70323701P	Contactor	Motor; 9 Amp
7	M412405P	Reversing Contactor	RQ and RT control suffixes
8	M412540	End Section	230 Volt
9	M412537	Terminal Block	230 Volt; Primary; 2 required; Use 502593 Fuse
10	70121001	End Stop	3 required
11	M412267	Contactor Box Bottom	
12	N/A	Din Rail	13 inches
13	51780	Screw	12 required
14	M412477P	Transformer	240 Volt
15	501086	Screw	2 required; MT and RT control suffixes
16	M412534	Relay	24 Volt; MT and RT control suffixes
17	M412692	Din Rail	3.5 inches
18	M412631	Terminal Block	2 circuit; 6 required
19	M412632	Terminal Block	1 circuit; 4 required
20	M412633	End Barrier	
21	M412407P	Circuit Breaker	3 pole; 8 Amp
22	M412408P	Circuit Breaker	3 pole; 50 Amp; 2 required
23	39733	Screw	4 required
24	M413865	Terminal Block	3 pole
25	M412693	Din Rail	6.5 inches
26	M412656	Ground Buss Assembly	
27	M412688	Nut	2 required
28	M412096	Earth Terminal Sticker	

N/A = Part no longer available

info@zipnasklade.ru
8(800)500-69-51

© Copyright, Alliance Laundry Systems LLC – DO NOT COPY or TRANSMIT

Contactor Box Assembly (Drawing 14 of 21)

CE Electric Models Except G, K and L Models
Models with CD, CX, CY, MT, QT, RQ and RT Control Suffixes and SD and SX Control Suffixes Starting 1/1/07;
380 or 415 Volt/50 Hertz/3 Phase

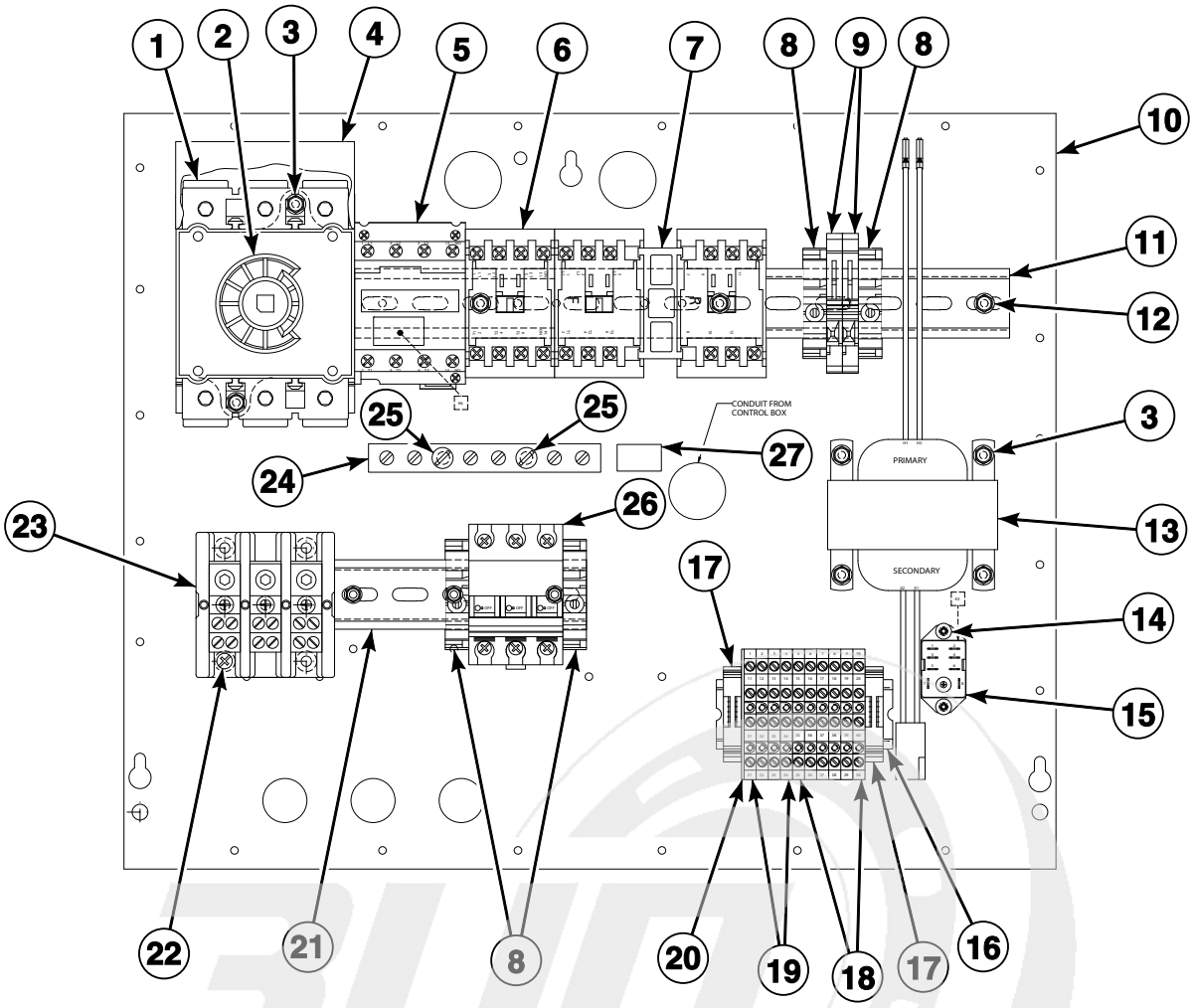

TMB2622P_70409201

info@zipnasklade.ru
8(800)500-69-51

© Copyright, Alliance Laundry Systems LLC – DO NOT COPY or TRANSMIT

Contactor Box Assembly (Drawing 14 of 21)

REF	PART NO.	DESCRIPTION	COMMENTS
	M412766	Relay Harness Assembly	MT and RT control suffixes
	M414150	Relay Harness Assembly	QT, RQ, SD and SX control suffixes
	M412641	Transformer Harness Assembly	Secondary
	M414121	Jumper Cable Assembly	8 gauge; 3 required
	M412928	Reversing Jumper Harness Assembly	Upper; 2 required; RQ and RT control suffixes
	M412929	Reversing Jumper Harness Assembly	Lower; RQ and RT control suffixes
	44014501	Jumper Wire	3 required
	44014801	Jumper Wire	3 required
	M413934	Jumper Cable Assembly	3 required
	44014901P	Power Distribution Block Cover	Includes 2 screws; Use with item 23
	M412265	Contactor Box Cover	
	44127701	Warning Label	Extended tumble; On contactor box cover
1	M412186	Mounting Switch Base	100 Amp
2	M412371P	Extension Handle	100 Amp
3	33562	Screw	6 required
4	M412367	Finger Guard	100 Amp
5	70343301P	Contactor	Electric; 50 Amp
6	70323701P	Contactor	Motor; 9 Amp
7	M412405P	Reversing Contactor	RQ and RT control suffixes
8	M412615	End Stop	400 Volt; 4 required
9	M412538	Terminal Block	400 Volt; Primary; 2 required; Use M412996 Fuse
10	M412267	Contactor Box Bottom	
11	N/A	Din Rail	13 inches
12	51780	Screw	10 required
13	M412412P	Transformer	400 Volt
14	501086	Screw	2 required; MT and RT control suffixes
15	M412534	Relay	MT and RT control suffixes
16	M412692	Din Rail	3.5 inches
17	70121001	End Stop	230 Volt; 2 required
18	M412631	Terminal Block	2 circuit; 6 required
19	M412632	Terminal Block	1 circuit; 4 required
20	M412633	End Barrier	
21	N/A	Din Rail	5 inches
22	39733	Screw	4 required
23	M413865	Terminal Block	3 pole
24	M412656	Ground Buss Assembly	
25	M412688	Nut	2 required
26	M412407P	Circuit Breaker	3 pole; 8 Amp
27	M412096	Earth Terminal Sticker	

N/A = Part no longer available

info@zipnasklade.ru
8(800)500-69-51

© Copyright, Alliance Laundry Systems LLC – DO NOT COPY or TRANSMIT

Contactor Box Assembly (Drawing 15 of 21)

CE Electric Models
Models with 3O, 3V, 3X, BC, BL, BU, BX, BY, DO, DV, DX, NC, NR, NX,
NY, OM, R3, RD, RM, ZC, ZR, ZX and ZY Control Suffixes;
230 Volt/50 Hertz/3 Phase

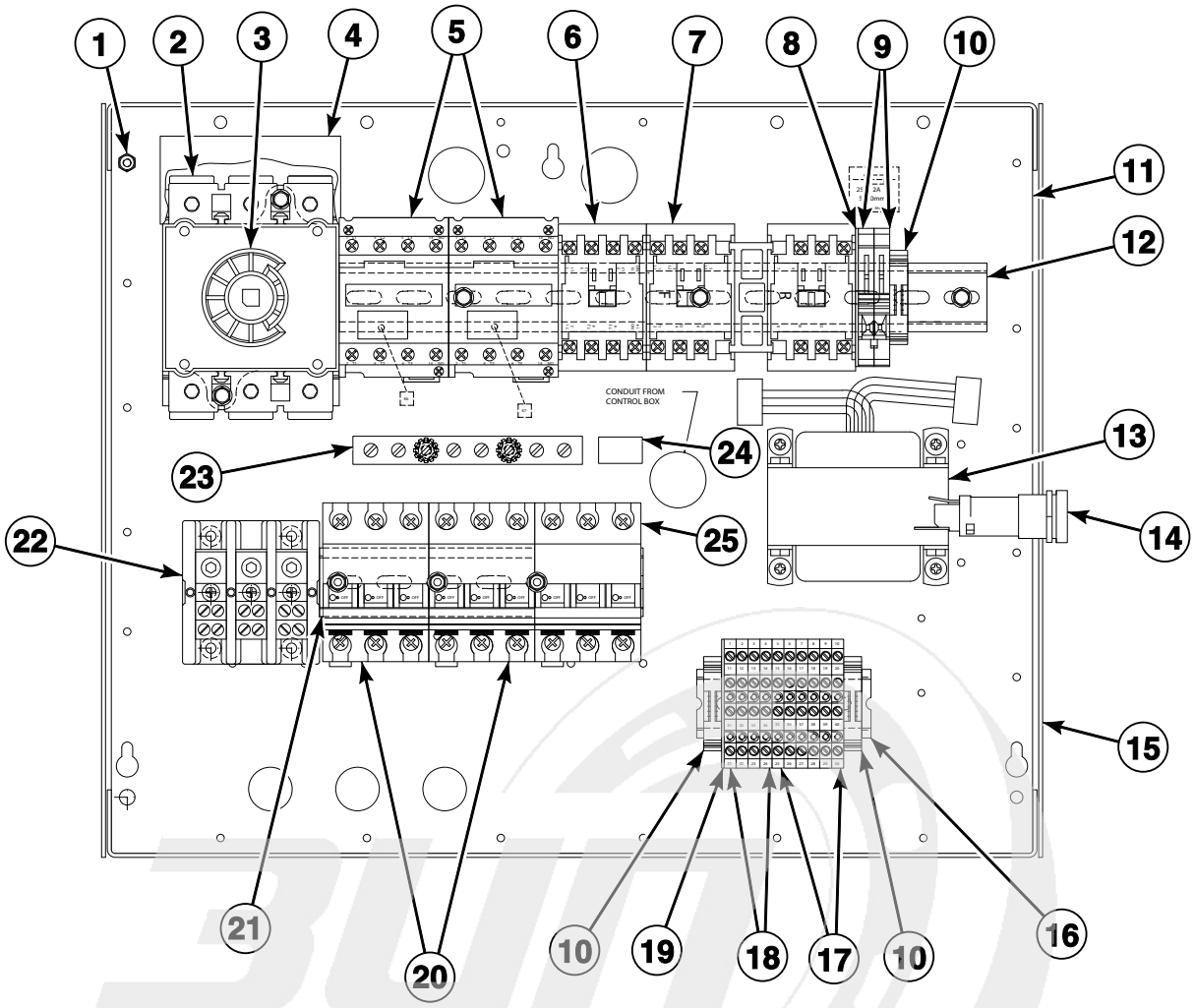

TMB2625P_70409201

info@zipnasklade.ru
8(800)500-69-51

© Copyright, Alliance Laundry Systems LLC – DO NOT COPY or TRANSMIT

Contactor Box Assembly (Drawing 15 of 21)

REF	PART NO.	DESCRIPTION	COMMENTS
	M413930P	Ferrite Core Assembly	
	M413863	Network Capacitor Assembly	
	44014901P	Power Distribution Block Cover	Includes 2 screws; Use with item 22
	M412265	Contactor Box Cover	Use 2 of M400713 Drive Rivet to secure cover to junction box; Use M412368 Door Interlock to mount M412208 Handle to cover
	44127701	Warning Label	Extended tumble; On contactor box cover
1	430497	Screw	24 required; Use to secure contactor box to backplane
2	M412186	Mounting Switch Base	100 Amp; Use 2 of 33562 Screw to secure
3	M412371P	Extension Handle	100 Amp
4	M412367	Finger Guard	100 Amp
5	70343301P	Contactor	Electric; 50 Amp; 2 required
6	70323701P	Contactor	Motor; 9 Amp
7	M412405P	Reversing Contactor	R3, RD and RM control suffixes
8	M412540	End Section	230 Volt
9	M412537	Terminal Block	230 Volt; Primary; 2 required; Use M413867 Fuse
10	70121001	End Stop	230 Volt; 3 required for R3, RD and RM control suffixes; 4 required for all other control suffixes
11	M412267	Contactor Box Bottom	
12	N/A	Din Rail	13 inches; Use 51780 Screw to secure
13	M414228P	Transformer	Dual secondary; Multitap; 100-240 Volt; Use 4 of 23951 Nut and 4 of M400044 Screw to secure
14	502591P	Fuse Holder Kit	Includes 502591 Fuse Holder Body and 502811 Fuse Carrier; Use M413889 Fuse
15	M412266	Contactor Box Side	2 required
16	M412692	Din Rail	3.5 inches; Use 51780 Screw to secure
17	M412631	Terminal Block	2 circuit; 6 required
18	M412632	Terminal Block	1 circuit; 4 required
19	M412633	End Barrier	
20	M412408P	Circuit Breaker	3 pole; 50 Amp; 2 required
21	M412693	Din Rail	6.5 inches; Use 51780 Screw to secure
22	M413865	Terminal Block	3 pole; Use 4 of 39733 Screw to secure
23	M412656	Ground Buss Assembly	Use 2 of M412688 Nut to secure
24	M412096	Earth Terminal Sticker	
25	M412407P	Circuit Breaker	3 pole; 8 Amp

N/A = Part no longer available

info@zipnasklade.ru
8(800)500-69-51

© Copyright, Alliance Laundry Systems LLC – DO NOT COPY or TRANSMIT

Contactor Box Assembly (Drawing 16 of 21)

CE Electric Models
Models with 3O, 3V, 3X, BC, BL, BU, BX, BY, DO, DV, DX, NC, NR, NX,
NY, OM, R3, RD, RM, ZC, ZR, ZX and ZY Control Suffixes;
380 Volt/50 Hertz/3 Phase; 415 Volt/50 Hertz/3 Phase

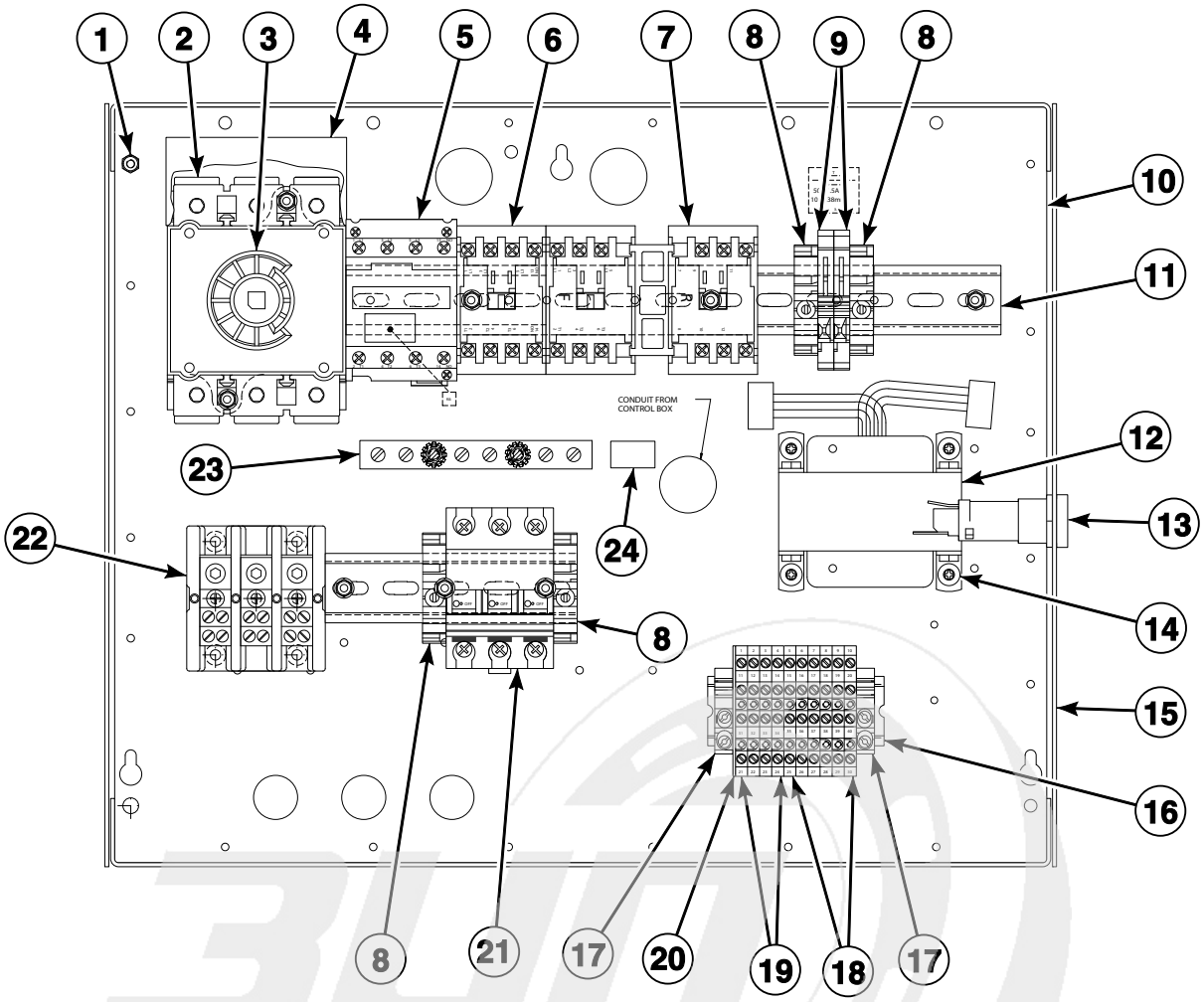

TMB2626P_70409201

info@zipnasklade.ru
8(800)500-69-51

© Copyright, Alliance Laundry Systems LLC – DO NOT COPY or TRANSMIT

Contactor Box Assembly (Drawing 16 of 21)

REF	PART NO.	DESCRIPTION	COMMENTS
	M413930P	Ferrite Core Assembly	
	M413863	Network Capacitor Assembly	3O, 3V, 3X, DO, DV, DX, OM, R3, RD and RM control suffixes
	M413508	Jumper Harness Assembly	380 Volt/50 Hertz/3 Phase
	M413509	Jumper Harness Assembly	415 Volt/50 Hertz/3 Phase
	M414121	Jumper Cable Assembly	8 gauge; 3 required
	M414150	Relay Harness Assembly	
	M414034	Reversing Contactor Harness Assembly	R3, RD and RM control suffixes
	M414028	Transformer Harness Assembly	Primary
	M414029	Transformer Harness Assembly	Secondary
	M412928	Reversing Jumper Harness Assembly	Upper; 2 required; R3, RD and RM control suffixes
	M412929	Reversing Jumper Harness Assembly	Lower; R3, RD and RM control suffixes
	44014501	Jumper Wire	3 required
	44014801	Jumper Wire	3 required
	M413934	Jumper Cable Assembly	3 required
	44043101	Transformer Harness	Secondary; DO, DV, DX and RD control suffixes
	44014901P	Power Distribution Block Cover	Includes 2 screws; Use with item 22
	M412265	Contactor Box Cover	Use 2 of M400713 Drive Rivet to secure cover to junction box; Use M412368 Door Interlock to mount M412208 Handle to cover
	44127701	Warning Label	Extended tumble; On contactor box cover
1	430497	Screw	24 required; Use to secure contactor box to backplane
2	M412186	Mounting Switch Base	100 Amp: Use 2 of 33562 Screw to secure
3	M412371P	Extension Handle	100 Amp
4	M412367	Finger Guard	100 Amp
5	70343301P	Contactor	Electric; 50 Amp
6	70323701P	Contactor	Motor; 9 Amp
7	M412405P	Reversing Contactor	RM control suffix
8	M412615	End Stop	400 Volt; 4 required
9	M412538	Terminal Block	400 Volt; Primary; 2 required; Use M413621 Fuse
10	M412267	Contactor Box Bottom	
11	N/A	Din Rail	13 inches; Use 51780 Screw to secure
12	M414229P	Transformer	Multitap; 380-480 Volt
13	502591P	Fuse Holder Kit	Includes 502591 Fuse Holder Body and 502811 Fuse Carrier; Use M413889 Fuse
14	M400044	Screw	4 required; Use with 4 of 23951 Nut to secure item 12
15	M412266	Contactor Box Side	2 required
16	M412692	Din Rail	3.5 inches; Use 51780 Screw to secure
17	70121001	End Stop	2 required
18	M412631	Terminal Block	2 circuit; 6 required
19	M412632	Terminal Block	1 circuit; 4 required
20	M412633	End Barrier	
21	M412407P	Circuit Breaker	3 pole; 8 Amp
22	M413865	Terminal Block	3 pole; Use 4 of 39733 Screw to secure
23	M412656	Ground Buss Assembly	Use 2 of M412688 Nut to secure
24	M412096	Earth Terminal Sticker	

N/A = Part no longer available

info@zipnasklade.ru
8(800)500-69-31

© Copyright, Alliance Laundry Systems LLC – DO NOT COPY or TRANSMIT

Contactor Box Assembly (Drawing 17 of 21)

CE Electric C, H, S and U Models
Models with QT and RQ Control Suffixes and SD and SX Sontrol Suffixes Starting 1/1/07;
230 Volt/50 Hertz/3 Phase

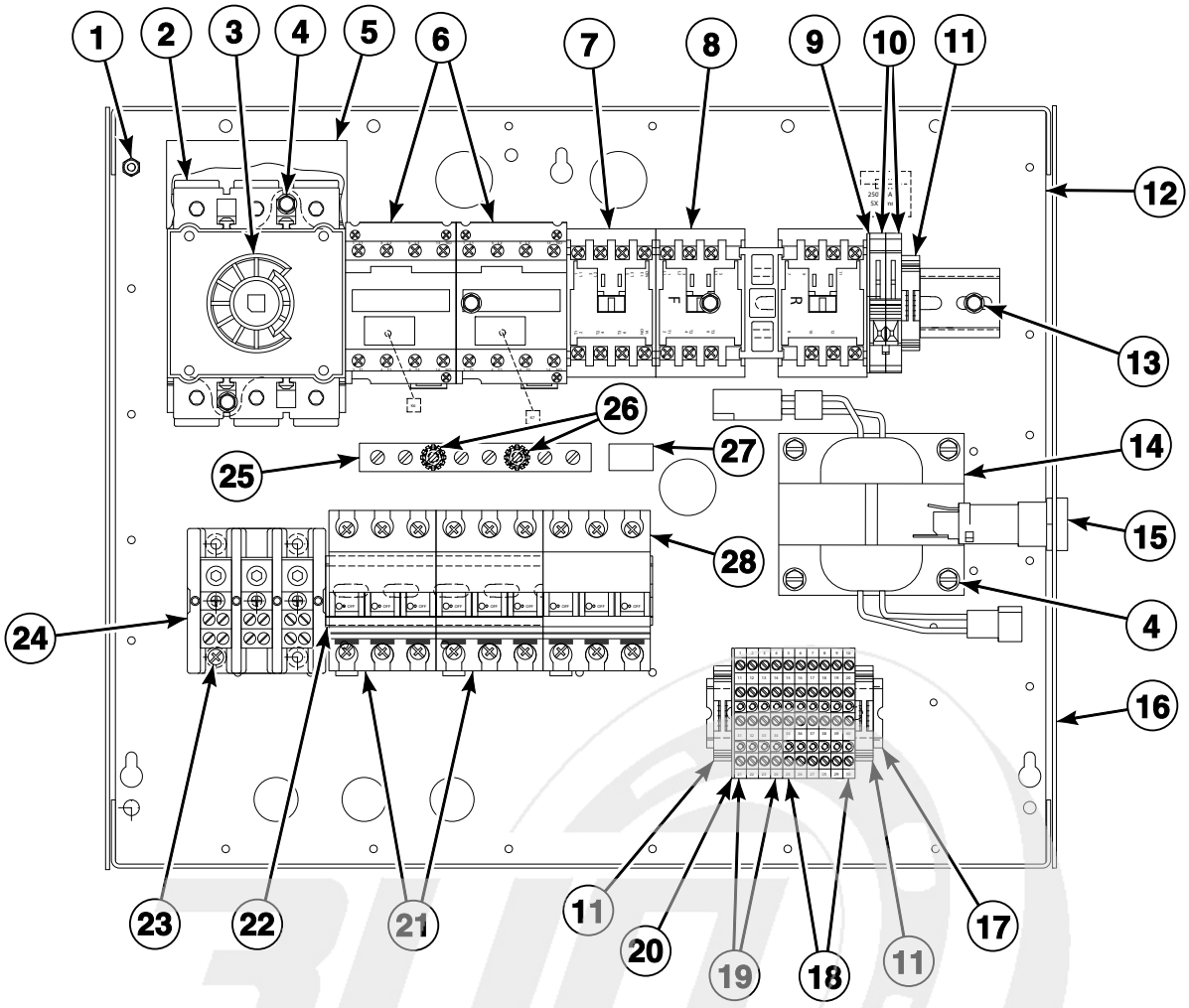

info@zipnasklade.ru
8(800)500-69-51

© Copyright, Alliance Laundry Systems LLC – DO NOT COPY or TRANSMIT

Contactor Box Assembly (Drawing 17 of 21)

REF	PART NO.	DESCRIPTION	COMMENTS
	M413930P	Ferrite Core Assembly	
	M412642	Transformer Harness Assembly	Primary
	M412641	Transformer Harness Assembly	Secondary
	M412740	Jumper Cable Wire	8 gauge; 6 required
	M414034	Reversing Contactor Harness Assembly	RQ control suffix
	M412928	Reversing Jumper Harness Assembly	Upper; 2 required; RQ control suffix
	M412929	Reversing Jumper Harness Assembly	Lower; RQ control suffix
	M413506	Jumper Harness Assembly	208 Volt
	44014501	Jumper Wire	3 required
	44014601	Jumper Wire	3 required
	44014701	Jumper Wire	3 required
	M413934	Jumper Cable Assembly	3 required
	44014901P	Power Distribution Block Cover	Includes 2 screws; Use with item 25
	M412265	Contactor Box Cover	Use 2 of M400713 Drive Rivet to secure cover to junction box; Use M412368 Door Interlock to mount M412208 Handle to cover
	44127701	Warning Label	Extended tumble; On contactor box cover
1	430497	Screw	23 required; Use to secure contactor box to backplane
2	M412186	Mounting Switch Base	100 Amp
3	M412371P	Extension Handle	100 Amp
4	33562	Screw	6 required
5	M412367	Finger Guard	100 Amp
6	70343301P	Contactor	Electric; 50 Amp; 2 required
7	70323701P	Contactor	Motor; 9 Amp
8	M412405P	Reversing Contactor	RQ control suffix
9	M412540	End Section	230 Volt
10	M412537	Terminal Block	230 Volt; Primary; 2 required; Use 502593 Fuse
11	70121001	End Stop	230 Volt; 3 required
12	M412267	Contactor Box Bottom	
13	51780	Screw	7 required
14	M412477P	Transformer	Multitap; 100-240 Volt
15	502591P	Fuse Holder Kit	Includes 502591 Fuse Holder Body and 502811 Fuse Carrier; Use M413889 Fuse
16	M412266	Contactor Box Side	2 required
17	M412692	Din Rail	3.5 inches
18	M412631	Terminal Block	2 circuit; 6 required
19	M412632	Terminal Block	1 circuit; 4 required
20	M412633	End Barrier	
21	M412408P	Circuit Breaker	3 pole; 50 Amp; 2 required
22	M412693	Din Rail	6.5 inches
23	39733	Screw	4 required
24	M413865	Terminal Block	3 pole
25	M412656	Ground Buss Assembly	
26	M412688	Nut	2 required
27	M412096	Earth Terminal Sticker	
28	M412407P	Circuit Breaker	3 pole; 8 Amp

info@zipnasklade.ru
8(800)500-69-51

© Copyright, Alliance Laundry Systems LLC – DO NOT COPY or TRANSMIT

Contactor Box Assembly (Drawing 18 of 21)

CE Electric C, H, S and U Models
Models with QT and RQ Control Suffixes and SD and SX Control Suffixes Starting 1/1/07;
380 Volt/50 Hertz/3 Phase; 415 Volt/50 Hertz/3 Phase

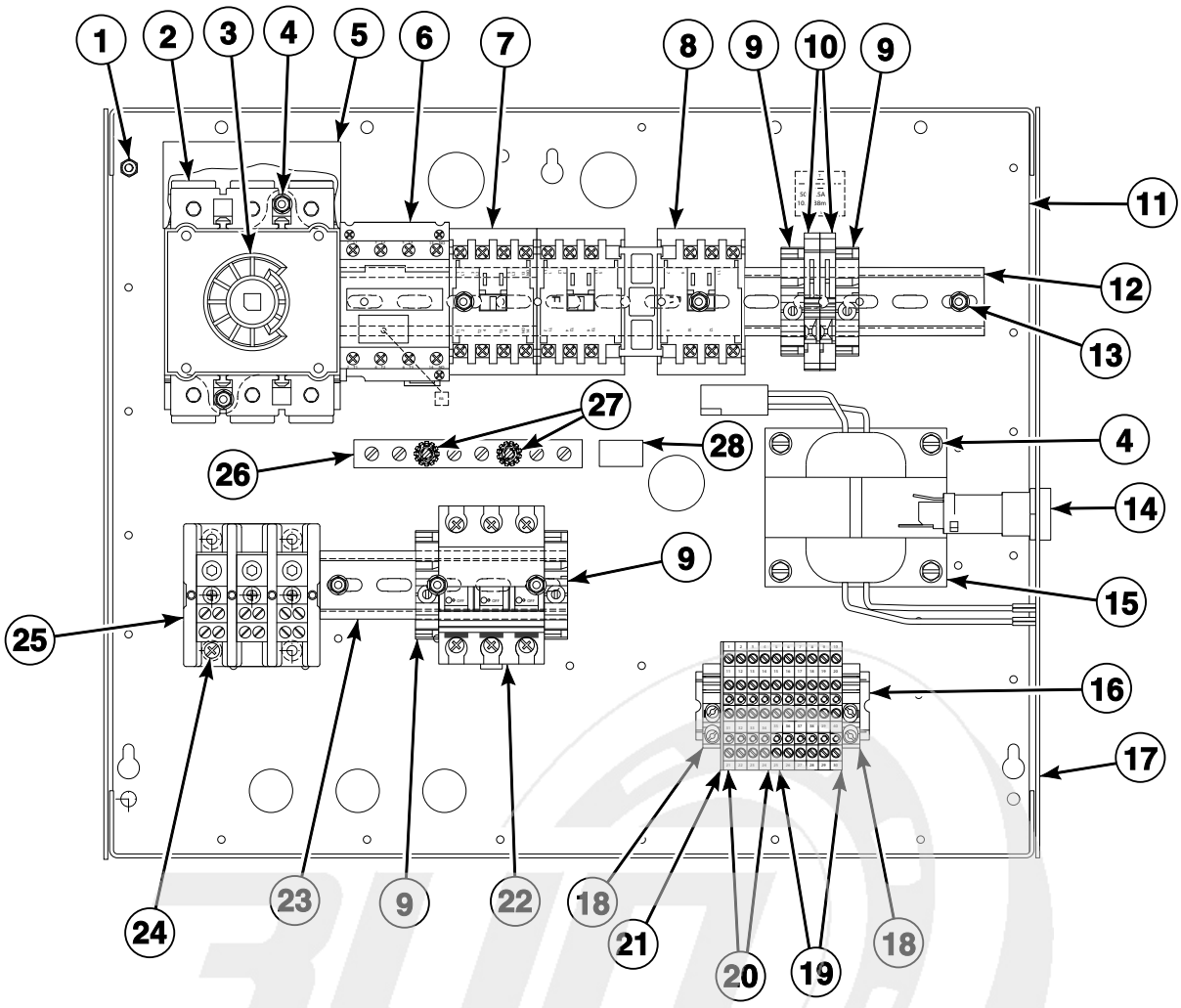

TMB2723P_70409201

info@zipnasklade.ru
8(800)500-69-51

© Copyright, Alliance Laundry Systems LLC – DO NOT COPY or TRANSMIT

Contactor Box Assembly (Drawing 18 of 21)

REF	PART NO.	DESCRIPTION	COMMENTS
	M413930P	Ferrite Core Assembly	
	M414150	Relay Harness Assembly	
	M414034	Reversing Contactor Harness Assembly	RQ control suffix
	M412641	Transformer Harness Assembly	Secondary
	M412928	Reversing Jumper Harness Assembly	Upper; 2 required; RQ control suffix
	M412929	Reversing Jumper Harness Assembly	Lower; RQ control suffix
	44014501	Jumper Wire	3 required
	44014801	Jumper Wire	3 required
	M413934	Jumper Cable Assembly	3 required
	M414121	Jumper Cable Assembly	8 gauge; 3 required
	44014901P	Power Distribution Block Cover	Includes 2 screws; Use with item 25
	M412265	Contactor Box Cover	Use 2 of M400713 Drive Rivet to secure cover to junction box; Use M412368 Door Interlock to mount M412208 Handle to cover
	44127701	Warning Label	Extended tumble; On contactor box cover
1	430497	Screw	23 required; Use to secure contactor box to backplane
2	M412186	Mounting Switch Base	100 Amp
3	M412371P	Extension Handle	100 Amp
4	33562	Screw	6 required
5	M412367	Finger Guard	100 Amp
6	70343301P	Contactor	Electric; 50 Amp
7	70323701P	Contactor	Motor; 9 Amp
8	M412405P	Reversing Contactor	RQ control suffix
9	M412615	End Stop	400 Volt; 4 required
10	M412538	Terminal Block	400 Volt; Primary; 2 required; Use M412996 Fuse
11	M412267	Contactor Box Bottom	
12	N/A	Din Rail	13 inches
13	51780	Screw	9 required
14	502591P	Fuse Holder Kit	Includes 502591 Fuse Holder Body and 502811 Fuse Carrier; Use M413889 Fuse at secondary and M413621 Fuse at primary
15	M412412P	Transformer	Multitap; 380-480 Volt
16	M412692	Din Rail	3.5 inches
17	M412266	Contactor Box Side	2 required
18	70121001	End Stop	2 required
19	M412631	Terminal Block	2 circuit; 6 required
20	M412632	Terminal Block	1 circuit; 4 required
21	M412633	End Barrier	
22	M412407P	Circuit Breaker	3 pole; 8 Amp
23	N/A	Din Rail	5 inches
24	39733	Screw	4 required
25	M413865	Terminal Block	3 pole
26	M412656	Ground Buss Assembly	
27	M412688	Nut	2 required
28	M412096	Earth Terminal Sticker	

N/A = Part no longer available

info@zipnasklade.ru
8(800)500-69-51

© Copyright, Alliance Laundry Systems LLC – DO NOT COPY or TRANSMIT

Contactor Box Assembly (Drawing 19 of 21)

CE Electric Models
240 Volt/50 Hertz/1 Phase

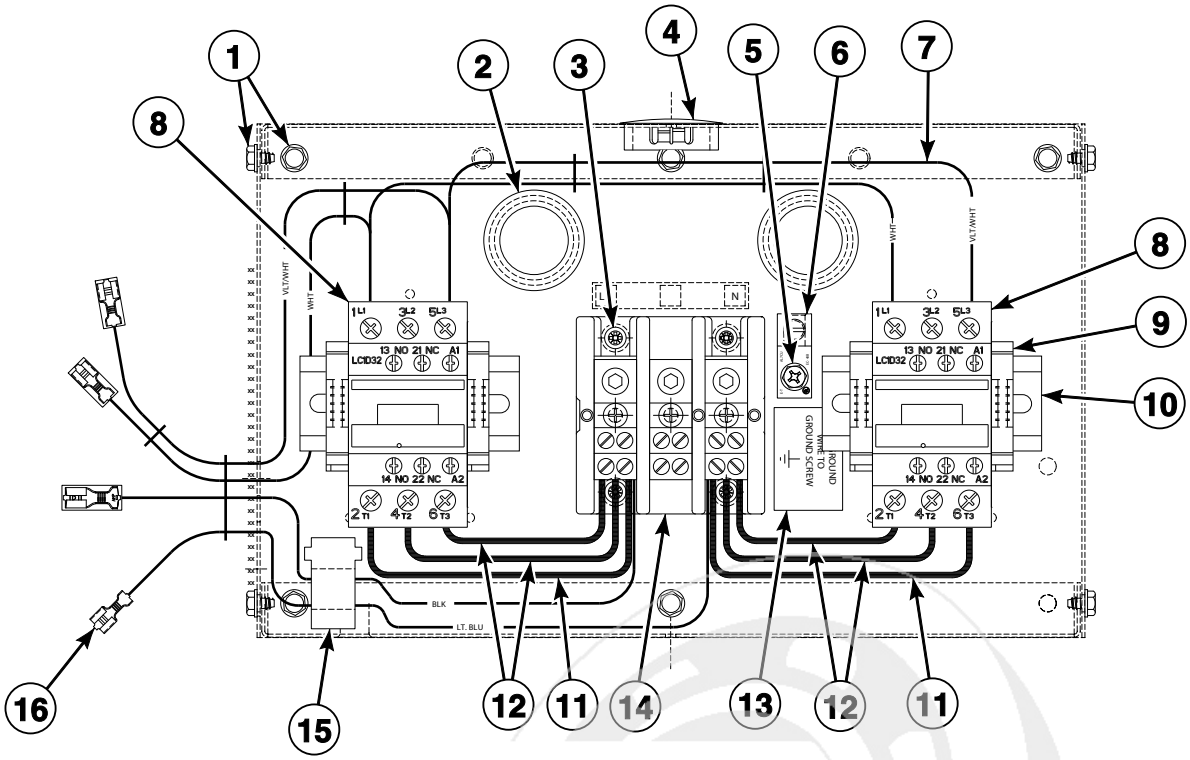

TMB2632P_70409201

info@zipnasklade.ru
8(800)500-69-51

© Copyright, Alliance Laundry Systems LLC – DO NOT COPY or TRANSMIT

Contactor Box Assembly (Drawing 19 of 21)

REF	PART NO.	DESCRIPTION	COMMENTS
	M413856	Electric Accessory Box Cover	
	44127701	Warning Label	Extended tumble; On electric accessory box cover
	M4919P3	Electric Heater Contactor Kit	Use to replace contactors on models through 7/10/07
1	51780	Screw	15 required
2	M402542	Snap Bushing	1 3/8 inches; 2 required
3	39733	Screw	4 required
4	N/A	Hole Plug	1 3/8 inches
5	M402917	Screw	Ground
6	M411283	Ground Lug Connector	
7	44129201P	Jumper Harness	
8	70343301P	Contactor	2 required; Models starting 7/10/07
9	M412615	End Stop	4 required; Models starting 7/10/07
10	44137901	Din Rail	2 required; Models starting 7/10/07
11	M413934	Jumper Cable Assembly	2 required
12	M413933	Jumper Cable Assembly	4 required
13	M403047	Secure Ground Label	Electrical
14	M413865	Terminal Block	3 pole
15	M413930P	Ferrite Core Assembly	3O, 3V, 3X, DO, DV, DX, OM, R3, RD and RM control suffixes
16	44129001	Accessory Box Harness Assembly	

N/A = Part no longer available

info@zipnasklade.ru
8(800)500-69-51

© Copyright, Alliance Laundry Systems LLC – DO NOT COPY or TRANSMIT

Contactor Box Assembly (Drawing 20 of 21)

Electric Models

200 Volt/50 Hertz/3 Phase; 200-208 Volt/60 Hertz/3 Phase; 240 Volt/50 or 60 Hertz/3 Phase

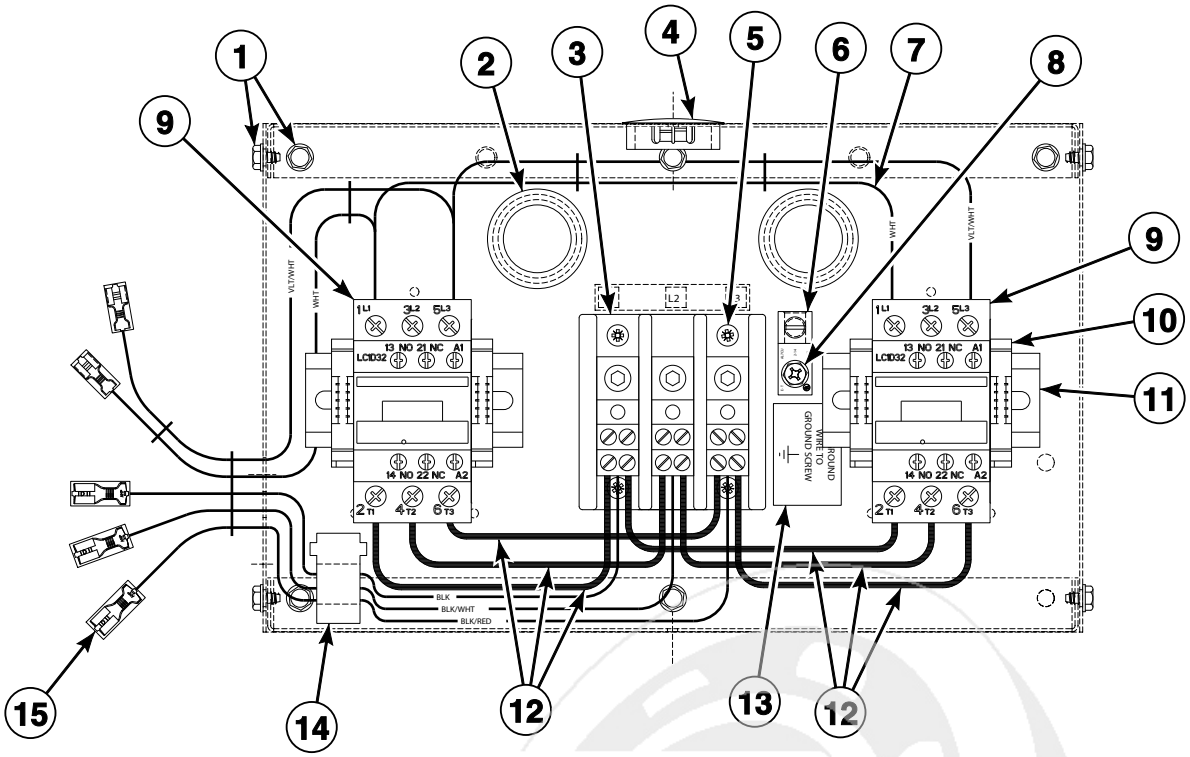

TMB2633P_70409201

info@zipnasklade.ru
8(800)500-69-51

© Copyright, Alliance Laundry Systems LLC – DO NOT COPY or TRANSMIT

Contactor Box Assembly (Drawing 20 of 21)

REF	PART NO.	DESCRIPTION	COMMENTS
	M413856	Electric Accessory Box Cover	
	44127701	Warning Label	Extended tumble; On electric accessory box cover
	M4919P3	Electric Heater Contactor Kit	Use to replace contactors on models through 7/10/07
1	51780	Screw	15 required
2	M402542	Snap Bushing	1 3/8 inches; 2 required
3	M413865	Terminal Block	3 pole
4	N/A	Hole Plug	1 3/8 inches
5	39733	Screw	4 required
6	M411283	Ground Lug Connector	
7	44129201P	Jumper Harness	
8	M402917	Screw	Ground
9	70343301P	Contactor	2 required; Models starting 7/10/07
10	M412615	End Stop	4 required; Models starting 7/10/07
11	44137901	Din Rail	2 required; Models starting 7/10/07
12	M413933	Jumper Cable Assembly	6 required
13	M403047	Secure Ground Label	Electrical
14	M413930P	Ferrite Core Assembly	3O, 3V, 3X, DO, DV, DX, OM, R3, RD and RM control suffixes
15	44129101P	Accessory Box Harness Assembly	

N/A = Part no longer available

info@zipnasklade.ru
8(800)500-69-51

© Copyright, Alliance Laundry Systems LLC – DO NOT COPY or TRANSMIT

Contactor Box Assembly (Drawing 21 of 21)

Electric Models

380 Volt/50 Hertz/3 Phase; 415 Volt/50 Hertz/3 Phase; 480 Volt/60 Hertz/3 Phase

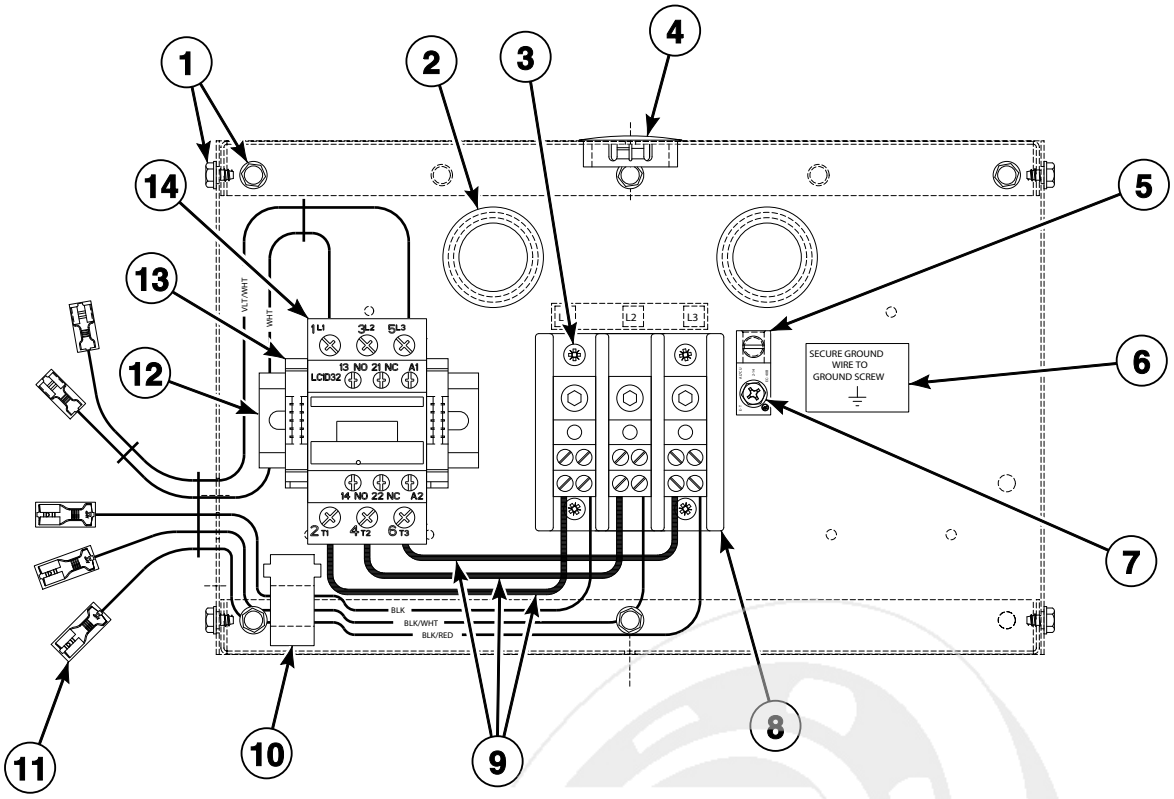

TMB2634P_70409201

info@zipnasklade.ru
8(800)500-69-51

© Copyright, Alliance Laundry Systems LLC – DO NOT COPY or TRANSMIT

Contactor Box Assembly (Drawing 21 of 21)

REF	PART NO.	DESCRIPTION	COMMENTS
	M413856	Electric Accessory Box Cover	
	44127701	Warning Label	Extended tumble; On electric accessory box cover
	M4945P3	Electric Heater Contactor Kit	Use to replace contactors on models through 7/10/07
1	51780	Screw	13 required
2	M402542	Snap Bushing	1 3/8 inches; 2 required
3	39733	Screw	4 required
4	N/A	Hole Plug	1 3/8 inches
5	M411283	Ground Lug Connector	
6	M403047	Secure Ground Label	Electrical
7	M402917	Screw	Ground
8	M413865	Terminal Block	3 pole
9	M413933	Jumper Cable Assembly	3 required
10	M413930P	Ferrite Core Assembly	3O, 3V, 3X, DO, DV, DX, OM, R3, RD and RM control suffixes
11	44129101P	Accessory Box Harness Assembly	
12	44137901	Din Rail	Models starting 7/10/07
13	M412615	End Stop	Models starting 7/10/07
14	70343301P	Contactor	Models starting 7/10/07

info@zipnasklade.ru
8(800)500-69-51

© Copyright, Alliance Laundry Systems LLC – DO NOT COPY or TRANSMIT

Notes

info@zipnasklade.ru
8(800)500-69-51

© Copyright, Alliance Laundry Systems LLC – DO NOT COPY or TRANSMIT

Parts Index

A

Access Panel Trim
70399402 65
Accessory Box Harness Assembly
44129001 173
44129101P 175, 177
Actuator Switch
M412423 121
Adjustable Buzzer
505447 31
Air Filter
44104201 123
Airflow Switch
M400944 121
Airflow Switch Assembly
M401883 121
Airflow Switch Bracket
M409202 121
Airflow Switch Guard
M410544 121
Airflow Switch Handy Box
M403235 121
Airflow Switch Harness Assembly
M413689 121
Airflow Switch Insulator Barrier
M400712 121
Airflow Switch Vane
M413475 121
Airflow Switch Vane Lever
M400753 121
Anti-Torque Ring
M400605 107

B

Baffle
44005001P 77
44005301P 77
44065601P 77
Baffle Gasket
70015701 77
Ball Bearing
M401375P 95
44041901P 85
Bearing
F100136P 85
Bearing Retainer
M401370 95
Belt
M401182P 93
M412090 91
M412981 91
Belt Guard
M413008 101
M413541 89
Belt Guard Assembly
44132404 91
44132405 93
44132407 91
Blower Cover
M413399 105
Bolt
M400650 85
M401393 ..... 91, 101
M412119 97
Bottom Pan
44000701 77
Bracket
44065901 17
Bumper
M400795 127
Burner Assembly
M410541P 107, 109, 115
Burner Orifice
M400997 ..... 111, 115
M400998 115
M400999 111
M401001 111
M401002 115
M401003 111
M401011 ..... 111, 115
M401014 111
M401017 111
M401020 115
M401021 111
M401027 ..... 111, 115
M402997 115
M403017 115
M406184 115
M406361 115
Bushing
H87529111P 105
M411537 ..... 137, 139, 141, 143
M412086P 91
M412885P 91
M412917P 91
Bypass Harness Assembly
M413168 ..... 15, 133, 143

C

Cabinet Limit Harness Assembly
M412670 75
M413693P 75
Cable Screw Clamp
M404550 77
Calibration Jumper
70084104P 19, 25
Cam and Hinge Kit
M4771P3 79
M4772P3 81
Cam Package
M409532 19
Card Reader and Bracket Assembly
510068P 39, 49
Card Reader Harness Assembly
70211801 49
Card Reader Network Harness Assembly
70206601 49

N/A items do not appear in index.

info@zipnaskladе.ru
8(800)500 69 51

© Copyright, Alliance Laundry Systems LLC – DO NOT COPY or TRANSMIT

Card Reader Overlay
70334201 41
70334301 41

Circuit Board Support
34896 ..... 19, 25
501523 17
70178801 19

Circuit Breaker
M412407P 161, 163, 165, 167, 169, 171
M412408P 161, 165, 169

Clean Lint Compartment Sticker
70114001 73

Clip
M400974 123
M400976 121

Coil Spring
M402455 21

Coin Carrier Spring
M405138A 21

Coin Chute Assembly
70296401 77

Coin Cover Overlay
70246301 37

Coin Drop
38963P 43
39748 43
70256402P 43
70429001 43
70441601P 43

Coin Drop Assembly
210195 43
210196 43
38462P 43
38463 43
38464P 43
38467 43
38472 43
38475 43
38519 43
38521 43
39157 43
44039701P 43
44039702 43
44039703 43
44039704 43
44039705 43
44039706 43
44039707 43
70281102 43
70283102 43
70441602 43

Coin Drop Kit
CK077 43

Coin Drop Overlay
39564 37

Coin Drop Switch
CM1100P 43

Coin Identification Paper
38725 43

Coin Meter
M412546 21
70112501P 21
70112701P 21
70137301P 21
70137401P 21
70138401P 21
70151301 21
70262401 21

Coin Meter Drive
M400754 21

Coin Retainer Spring
M406297 21

Coin Vault Assembly
70180101 77

Coin Vault Switch Harness
44023001 ..... 55, 57

Coin Vault Trim
70117501 ..... 55, 57
70117502 ..... 55, 57

Communication Board
210095P 51

Communication Cable
M414875P 47, 49

Communication Connector
210099 51

Conduit Retainer
M405343 115

Contact Block
44018701 53
44018901 53

Contact Block Switch
F200233401 53

Contact Switch
F8069501 53

Contactor
70323701P 145, 147, 149, 151, 153, 155, 157, 159, 161, 163, 165, 167, 169, 171
70343301P 161, 163, 165, 167, 169, 171, 173, 175, 177

Contactor Box Bottom
M412267 ..... 161, 163, 165, 167, 169, 171

Contactor Box Cover
M412265 ..... 161, 163, 165, 167, 169, 171
M413760 ..... 137, 139, 141, 143

Contactor Box End
M413757 ..... 137, 139, 141, 143
M413758 ..... 137, 139, 141, 143

Contactor Box Harness Assembly
M413684P 133, 143

Contactor Box Side
M412266 ..... 165, 167, 169, 171

Contactor Box Wrapper
44028401 ..... 137, 139, 141, 143

Control
44063801P 17

Control Assembly
44013601P 35
44016201P 25, 27
511867P 37, 39
512202P 29
513139P 23
70462305P 33
70462306P 33
70462365P 33

Control Box Base
44065301 17

Control Box Cover
44065201 17

Control Box Harness
44005801 131

info@zipnasklade.ru
8(800)500-69-51

N/A items do not appear in index.

© Copyright, Alliance Laundry Systems LLC – DO NOT COPY or TRANSMIT

44005901 131
44006001 133
44045601 15

Control Box Harness Assembly
M413678P 15
M413679 15
M413680 15
M413683P 131, 139
M413824 15
M413993 15

Control Box Housing
44065101 17

Control Box Top
44065401 17

Control Chassis Mounting Bracket
70357901 ..... 23, 29

Control Conversion Kit
M4797P3 31
M4799P3 25

Control Door Assembly
70363401 23

Control Door Latch
431318 77

Control Harness
44076901P 17
44100001P 29
44100101P 29

Control Kit
505905P 47, 49
70228401P 35

Control Panel
44000117BP 59
44000117*P 59, 61
44000118P 59, 61
44000119* 59
44040001*P 59, 61
44040002 ..... 59, 61
44040003* 59, 61
44040004 ..... 59, 61
44040005* 59
44040006 59

Control Panel Harness
44005501P 19
44005601P 25
44005701P 25
44006601 19
44006701 25
44006801 25
44010801P 37, 39, 47, 49
44010901 ..... 37, 39, 47, 49
44016701P 35
44016702 35
44017001 35
44017002 35
44025601 25
44025701 25
44025801 19
44042601 31
44043201P 31
44051401 33
44052601 33
44098601 33
44099901P 23
44100201P 23
44100301P 29

Control Panel Harness Assembly
44040301 31

Control Plate Assembly
44040901 31
44041001 31
70175803 25
70175804 19
70175805 35
70175807 47
70348801 ..... 39, 41, 49
70360601 29
70419701 47

Control Plate Kit
44050701P 33
70291001P 37, 39, 47

Control Trim
44016301 ..... 55, 57
44016401 ..... 55, 57

Counterweight
M400822 121

Cover Plate
M401362 101

Cylinder
M401985P 83
M402517P 83

Cylinder and Trunnion Assembly
M406906P 87
M409015P 87
M409090P 87
M409091 87
44057501P 87
44057502 87
44057503P 87
44057504P 87
44080001 87
44131001 87
44131101 87
44131302 87
44131402 87

Cylinder Assembly
44079901P 83
44130702 83

Cylinder Kit
44057201P 83
44057301P 83

Cylinder Motor Harness
M412745 89

Cylinder Motor Harness Assembly
M412573 89
M413687 89
M413688 89

Cylinder, Trunnion and Bearing Housing Kit
M4818P3 87

D

Din Rail
M412692 ..... 161, 163, 165, 167, 169, 171
M412693 ..... 161, 165, 169
44137901 ..... 173, 175, 177

Display Assembly
512218P 29

Door Assembly
44028902P 81
44046701 79
44058001P 79
44058102P 81

N/A items do not appear in index.

info@zipnasklade.ru
8(800)500-63-51

© Copyright, Alliance Laundry Systems LLC – DO NOT COPY or TRANSMIT

44086801P 81
44112101 81
70176503 79
70212200 79
70212300 79
70407401 81
70408901 79

Door Glass
M400784P 79
44008401P 81
44008402P 81
70133601P 79

Door Glass Installation Tool
M4221P4 ..... 79, 81

Door Glass Seal Kit
70211901P 79

Door Handle
M400133 ..... 79, 81
430117 79
44007901 81
44007902P 79
44057701 79
44057702 81

Door Hinge
70115901* 79
70115902 79
70115903B 79

Door Hinge Assembly
44075203* 81
44075204 81
44075208B 81

Door Hinge Cam Assembly
44035102 81
70436202 ..... 79, 81

Door Hinge Lug Assembly
44035001 ..... 55, 57, 79, 81
44035002 ..... 79, 81

Door Latch
M401223 ..... 55, 57

Door Ring
44007703B 81
70081801 79
70082001 79
70399701B 79

Door Ring and Handle Assembly
44043501 79
44112001 81

Door Ring Gasket
44008201P 81
70296801 79

Door Seal Kit
70211902P 81

Door Switch
44018201 55

Door Switch Actuator Kit
70215001P 81

Door Switch Cover
44001301 55

Door Switch Wire Channel
44001801 55

Double V Sheave
M412916 91

Drive Rivet
M400713 17

Drum Idler Wheel Assembly
430619 ..... 97, 99

E

Earth Terminal Sticker
M412096 ..... 145, 147, 149, 151, 153, 155, 157, 159, 161, 163, 165, 167, 169, 171

Electric Accessory Box Cover
M413856 ..... 137, 139, 141, 143, 173, 175, 177

Electric Heater Cabinet Assembly
M414825 ..... 117, 119

Electric Heater Contactor Kit
M4919P3 ..... 173, 175
M4945P3 177

Electronic Coin Drop Assembly
70294103P 43
70294104 43
70294105P 43
70294106 43
70294107 43
70294111 43
70294116 43

Electronic Coin Drop Harness
44065801 43

Electronic Coin Drop Kit
CK099 45
CK100 45
CK101 45
CK103 45
CK108 45
CK109 45
CK113 45
CK115 45
CK116 45
CK117 45
CK118 45
CK502 45

Electronic Control
44037801P 31

Emergency Stop Button Kit
F200233700P 53

Emergency Stop Label
M412235 53
44012901 53

Emergency Stop Pushbutton
F200233500 53

Emergency Stop Switch Harness Assembly
70083901 ..... 53, 65, 67

End Barrier
M412633 ..... 145, 147, 149, 151, 153, 155, 157, 159, 161, 163, 165, 167, 169, 171

End Section
M412540 ..... 145, 147, 149, 151, 153, 161, 165, 169

End Stop
M412615 155, 157, 159, 163, 167, 171, 173, 175, 177
70121001 ..... 145, 147, 149, 151, 153, 155, 157, 159, 161, 163, 165, 167, 169, 171

Exhaust Thimble
M413173 127

Exhaust Thimble Assembly
M412288 127

Expansion Clip
70030501 ..... 55, 57

info@zipnasklade.ru
8(800)500 60 51

N/A items do not appear in index.

© Copyright, Alliance Laundry Systems LLC – DO NOT COPY or TRANSMIT

Extension Handle
M412370 ..... 145, 147, 149, 151, 153, 155, 157, 159
M412371P 161, 163, 165, 167, 169, 171

Extension Spring
M412120 93

F

Fan and Bushing Assembly
M414546 105

Fan Contactor
M413614P 137, 139, 141, 143

Fan Kit
M4936P3 101

Fan Motor
44045901P 103
44046001P 103

Fan Motor Harness
44006101P 101
44006201P 101

Fan Motor Harness Assembly
M413281 101
M413686 ..... 101, 105

Felt Pad
M402144 83

Ferrite Core Assembly
M413930P 35, 137, 139, 141, 143, 165, 167, 169, 171, 173, 175, 177

Filter
44172001 123

Finger Guard
M412366 ..... 145, 147, 149, 151, 153, 155, 157, 159
M412367 ..... 161, 163, 165, 167, 169, 171

Fire Suppression System Label
44128901 ..... 65, 67

Front Panel Assembly
44077801*P 63
44077802P 63
44077805*P 63
44077806P 63
44077811*P 63
44077812 63
44077901*P 67
44077902P 67
44077903* 67
44077904P 67
44077905*P 67
44077906P 67
44077907*P 67
44077908P 67
44077909* 63
44077910 63
44077911* 63
44077912 63
44077913*P 63
44077914 63
44077915*P 63
44077916 63

Front Panel Harness
44006901 65
44007001P 65

Front Panel Harness Assembly
44047801 65
44047901 65
44063101P 65, 67
44063201P 53, 65, 67

Front Pillar
44001201 71

Fuse
M413118 ..... 137, 141
M413621 ..... 139, 143
M413889 ..... 147, 151, 153
M414232 15
502592 ..... 145, 147, 149
70406501 35

Fuse Holder
M413544P 139, 143

Fuse Holder Bracket
M413575 ..... 137, 141
M413576 ..... 139, 143

Fuse Holder Kit
502591P 145, 147, 149, 151, 153, 165, 167, 169, 171

Fuse Receptacle
91024P 15, 137, 141

Fuse Sticker
M413816 ..... 137, 141
M413817 ..... 139, 143

G

Gas Relay Harness
44010701 ..... 149, 151

Gas Shut-Off Valve
M412562P 107, 115

Gas Stove Assembly
M413657P 115
M414366 ..... 107, 109

Gas Valve
M410907P 107
M410908 107
M413332P 107
44154501P 107, 109, 115
44154502P 109, 115

Gas Valve Bracket
M406814 ..... 107, 115
44040401 ..... 109, 115

Gas Valve Coil
44042901P 107, 115

Gas Valve Harness Assembly
M413650 107

Gas Valve Kit
44138701P 107

Graphic Overlay
44050401 33
44050501 33
44050502 33

Ground Buss Assembly
M412656 ..... 145, 147, 149, 151, 153, 155, 157, 159, 161, 163, 165, 167, 169, 171

Ground Lug Connector
M411283 ..... 173, 175, 177

Guide Rail
M412476 ..... 91, 93, 99

Guide Rail Spacer
M413269 91

Guide Rail Support
M413267 91
M413268 91

info@zipnaskade.ru
8(800)500-69-51

N/A items do not appear in index.

© Copyright, Alliance Laundry Systems LLC – DO NOT COPY or TRANSMIT

H

Handle and Caps Assembly
70154405 73
70154406 73

Handle Bar
70399501B 81
70399502B 79

Handle Bumper
70407202 73

Harness Assembly
M412997 ..... 107, 109, 115

Heater Cable Assembly
M413959 117
M413960 117

Heater Cable Harness Assembly
M412801 119
M412802 119

Heater Element
M410939P 117, 119
M410940P 117
M410941P 117, 119

High Temperature Lead
44061603 15
44061604 15

Hose
44073301 17

Hose Clamp
36801 17

Hose Fitting
44069101 17

Housing and Trunnion Assembly
M4644P3 87
M4645P3 87

I

ICM Return Lead
M411061 15

Idler Arm
44102701 99

Idler Arm Kit
M414320P 97, 99

Idler Housing
M412612 95

Idler Housing Kit
917P3 95
943P3P 97, 99

Idler Shaft
M412223P 97
M414241 95

Idler/Belt Assembly Kit
942P3P 99

Ignition Control
70367301P 15
70367401P 15

Indicator Light
70082201 ..... 19, 27

Instant Electronic Ignition Control
M410904P 15

Insulation
M414503 ..... 107, 109, 115
44020601 ..... 59, 61

Insulator
M413862 ..... 137, 139, 141, 143

J

Jumper Bar
M400866 ..... 117, 119

Jumper Cable Assembly
M413933 ..... 173, 175, 177
M413934 ..... 135, 161, 163, 167, 169, 171, 173
M414121 ..... 163, 167, 171

Jumper Cable Wire
M412740 ..... 135, 161, 169

Jumper Calibration Wire
70324604 23
70324605 29

Jumper Configuration Assembly
M413507 ..... 131, 133, 135, 147, 151
M413510 ..... 139, 143

Jumper Harness
44129201P 173, 175

Jumper Harness Assembly
M412871 ..... 135, 161
M413506 ..... 131, 133, 135, 147, 151, 153, 169
M413508 ..... 139, 143, 159, 167
M413509 ..... 139, 143, 167
M414078 135

Jumper Set Assembly
44042701 31
44042801 31

Jumper Strip
M400869 ..... 117, 119

Jumper Wire
M414077 159
44014501 ..... 135, 161, 163, 167, 169, 171
44014601 ..... 135, 161, 169
44014701 ..... 135, 161, 169
44014801 ..... 163, 167, 171

Jumper Wire Assembly
M412287 ..... 117, 119
M412645 ..... 19, 23, 27, 29, 35, 37, 39, 47, 49

Junction Box Cover
M412650 ..... 145, 147, 149, 151, 153, 155, 157, 159

Junction Box Side
M412649 ..... 145, 147, 149, 151, 153

K

Key
H8752006H 105
M400008 ..... 85, 93
M400993 ..... 95, 101
M401327 ..... 93, 95, 97, 99
M405232 85
44132301 101
70155601 ..... 17, 55, 57
70155602 ..... 55, 57

Key and Instruction Kit
M400994P 101

Kickplate
70117607 73
70117608 73

N/A items do not appear in index.

info@zipmasklade.ru
8(800)500-69-51

© Copyright, Alliance Laundry Systems LLC – DO NOT COPY or TRANSMIT

Knob
M400773 27
M410927 27
44020501 ..... 19, 27
44020502 ..... 19, 27

L

Label
70414001 65
Latch Mounting Bracket
44003201 77
Lever Arm Switch
44011601 69
Light
801431 23
801432 17
Lighted Switch Bracket
44005101 15
Limit Thermostat
M401404 113
M409433 ..... 117, 119
M410220 115
M410542 75
M411813 75
Lint Panel
44000001*P 73
44000002P 73
Lint Panel Harness Assembly
44048101P 71
Lint Panel Switch Bracket
44011501 69
44118601 71
Lint Screen
44063601 77
Loading Spring
M400401 95
Lock, Key and Nut Kit
44089301P 17, 55, 57
44089302P 55, 57
Low Pressure Steam Cover
M400828 123
L.P. Conversion Kit
M4454P3 ..... 107, 109
M4543P3 107
M4609P3 115
L.P. Gas Valve Kit
M4897P3 107

M

Main Harness
44006301P 15
44006501P 15
44098801 15
Male Tab Terminal
00177 ..... 19, 23, 27, 29, 31
Manifold Pipe
44040501 107
Manifold Pipe Assembly
M406681 ..... 107, 109, 115
M413395 107
Manual Reset Thermostat
M411941 75
M411943 113
Membrane Switch
M414368P 35
44037901P 31
44039402P 31
Micro V Belt
M411425P 93
Micro V Pulley
M411466P 97, 99
Micro V Sheave
M412156 93
Mixing Valve
36958P 17
Motor
44045701P 103
44046201P 103
44046301P 105
44048801P 103
Motor Base
M413391 105
Motor Bracket
M411483 ..... 91, 93, 101
44117201 ..... 91, 93, 101
Motor Hardware Kit
M4426P3 101
Motor Harness
44250101 101
Motor Kit
M412519P 89
M412520P 89
44245502 103
Motor Mount Assembly
M413617 89
Motor Switch
M414563 89
Mounting Bracket
70080701 ..... 19, 25
Mounting Plate
70208801 ..... 39, 41, 49
Mounting Switch Base
M412186 ..... 161, 163, 165, 167, 169, 171
M412187P 145, 147, 149, 151, 153, 155, 157, 159

N

Nameplate
44010401 ..... 59, 61
44010601 ..... 59, 61
44035801 61
44046801 ..... 59, 61
44062901 59
70243901 59
Nameplate Bezel
70117401 59
Nameplate Overlay
M412963 ..... 59, 61
44104501 59
44130601 59
44144401 ..... 59, 61
70128901 59
70410201 ..... 59, 61

info@zipnasklade.ru
8(800)500-69-51

N/A items do not appear in index.

© Copyright, Alliance Laundry Systems LLC – DO NOT COPY or TRANSMIT

Network Board Assembly
210016P 51
Network Capacitor Assembly
M413863 137, 139, 141, 143, 147, 151, 159, 165, 167
Network Capacitor Harness Assembly
M413878 ..... 137, 139, 141, 143
Network Wire Harness Assembly
800217 ..... 47, 49
Nut
H88412101 ..... 91, 93, 99
M400022 101
M400026 ..... 85, 91, 93
M400034 101
M400035 93
M400977 ..... 55, 57, 59, 121
M400979 ..... 69, 121
M401548 ..... 107, 109, 115
M404993 83
M412688 ..... 145, 149, 151, 153, 155, 157, 159, 161, 163, 169, 171
M414215 ..... 79, 81
02428 ..... 89, 91, 101, 105
02788 55
20274 ..... 89, 91, 101, 105
21899 77
23951 ..... 73, 79, 81
24205 ..... 23, 29
29786 ..... 23, 33, 37, 47, 55, 79
29787 ..... 31, 33
44071201 ..... 79, 81
44087201 99
51236 73
52566 97
56156 ..... 97, 99
70030401 77
70054 ..... 19, 23, 25, 29, 31, 35, 39, 41, 49, 117, 119
70142 89

O

Opto Coupler
200674P 43
Overlay
44130001 35
44130002 35
44144301 47
44144302 47
44147801 47
44149301 49
70113501 19
70114301 19
70114501 27
70114502 27
70115801 35
70128401 35
70128601 35
70128701 35
70129202 27
70129501 ..... 37, 47
70129601 37
70130301 35
70130401 35
70130501 35
70130601 35
70130701 35
70131001 19
70134801 19
70134901 27
70135301 35
70183501 19
70184301 47
70184302 47
70184401 49
70239601 47
70239602 47
70245901 27
70246001 27
70246101 27
70257701 37
70257702 37
70257703 ..... 39, 41
70258001 37
70258002 37
70258003 ..... 39, 41
70259001 ..... 37, 39
70261001 37
70261002 37
70261003 39
70261201 37
70261202 37
70266701 39
70266801 39
70275401 37
70286701 37
70304401 41
70321001 37
70362201 29
70362202 29
70362501 29
70362502 29
70362901 23
70363001 23
70411701 37
70411702 37
70411703 39

P

Panel Locator
56079 ..... 55, 57, 73
PC Board Standoff
210098 51
Pipe
M400749 ..... 107, 109, 115
Plug
M400985 ..... 137, 139, 141, 143
Pop Rivet
M400003 ..... 55, 57, 77
70058501 81
70126301 ..... 73, 79, 81
70126401 73
Porcelain Touch-Up Paint
122P4P 77
215P4P 77
370P4P 77
Power Distribution Block Cover
44014901P 161, 163, 165, 167, 169, 171
Proximity Bracket
44044501 125
Pulley
M412884 91
M414564 101
M414565 89

N/A items do not appear in index.

info@zipnaskladu.ru
8(800)500-69-51

© Copyright, Alliance Laundry Systems LLC – DO NOT COPY or TRANSMIT

M414566 101
M414567 89

Pushbutton
44018801 53

Pushbutton Switch
M413431 15
70413301 ..... 37, 39, 41, 47, 49, 57, 71

Push-to-Start Switch
801434W 17

R

Rear Panel Assembly
M414747 ..... 77, 129

Relay
M412534 ..... 27, 35, 145, 147, 149, 151, 153, 155, 161, 163
502501 141

Relay Harness Assembly
M412636 ..... 145, 147
M412766 163
M412776P 161
M412777 161
M414032 ..... 147, 151, 153, 155, 159
M414149 161
M414150 ..... 163, 167, 171
M414224 ..... 147, 151, 153, 155

Relay/Buzzer Bracket
44041701 31

Resilient Ring Kit
M4525P3P 101

Return Spring
M405138B 21

Reversing Contactor
M412405P 147, 155, 157, 159, 161, 163, 165, 167, 169, 171
M413615P 141, 143

Reversing Contactor Harness Assembly
M414034 ..... 135, 147, 155, 159, 167, 169, 171

Reversing Contactor Jumper Assembly
M413624 ..... 133, 143
M413695 133

Reversing Jumper Harness Assembly
M412927 147
M412928 135, 155, 157, 159, 161, 163, 167, 169, 171
M412929 135, 155, 157, 159, 161, 163, 167, 169, 171

Reversing Timer
M412081 ..... 141, 143

Reversing Timer Harness
44008001 ..... 133, 143

Rib Rod
M404992 83

Ring
M400399 ..... 93, 99

Rocker Switch
M413270 27
44099601 29
70455101 ..... 23, 29
70461301 29

Roller Bracket Assembly
70404001 73

Roller Catch Arm
70030301 73

Roller Catch Spacer
70030201 73

Roller Catch Wheel
70297601 73

Rotary Drop Shroud
70061701 19

Rotation Sensor
7009P 125

Rotation Sensor Assembly
70417401P 125

Rotation Sensor Cable Assembly
70274102P 125

S

Screw
H8800901H 105
M400043 ..... 91, 93, 99
M400044 ... 79, 81, 137, 139, 141, 143, 151, 159, 167
M400056 ..... 89, 99
M400057 ..... 89, 91, 101, 105
M400061 ..... 91, 93
M400063 85
M400065 ..... 93, 99
M400071 ..... 151, 155
M400072 121
M400077 ..... 97, 99, 101
M400661 ..... 79, 81
M400664 ..... 75, 113, 115, 121
M401938 ..... 69, 121
M402574 55
M402585 79
M402797 ..... 27, 75, 113
M402917 ..... 137, 139, 141, 143, 173, 175, 177
M405188 ..... 123, 127
M405525 91
M405824 ..... 137, 139, 141, 143
M409385 ..... 79, 81
M410059 101
M411052 27
M411072 ..... 55, 57, 127
M411143 15
M412105 ..... 141, 143
M412627 ..... 91, 93, 99
M413565 89
22688 ..... 89, 105
33562 ..... 117, 119, 123, 145, 149, 153, 155, 157, 161, 163, 169, 171
39733 ..... 161, 163, 169, 171, 173, 175, 177
430497 ..... 15, 17, 19, 27, 71, 75, 77, 101, 107, 109, 113, 115, 117, 119, 121, 123, 145, 147, 149, 151, 153, 165, 167, 169, 171
430648 ..... 97, 99
430756 79
430757 73
431287 ..... 55, 77
44023301 ..... 55, 79
501086 ..... 139, 143, 145, 149, 153, 161, 163
501524 ..... 23, 29, 37, 39, 41, 47, 49
51778 ..... 137, 139, 141, 143
51780 ..... 15, 17, 121, 137, 139, 141, 143, 145, 147, 149, 151, 153, 155, 157, 159, 161, 163, 169, 171, 173, 175, 177
51782 69
61199 ..... 79, 81
70033502 ..... 55, 57, 81
70033504 ..... 55, 79

N/A items do not appear in index.

info@zimaskade.ru
8(800)500-69-51

© Copyright, Alliance Laundry Systems LLC – DO NOT COPY or TRANSMIT

70069901 ..... 15, 19, 23, 25, 29, 35
70072801 73
70132301 73
70182601 ..... 55, 57
70187201 ..... 85, 95
70240301 ..... 109, 115, 117, 119
70247701 77
70275801 ..... 55, 57
70409801 ..... 79, 81

Secure Ground Label
M403047 ..... 137, 139, 141, 143, 173, 175, 177

Sensor Harness Assembly
44068702P 17

Shadow Box Clip
M400972 ..... 55, 57

Sheave Kit
44086901P 93, 99

Shut-Off Valve Kit
M4983P3 ..... 107, 109, 115

Side Panel
44004701WP 77
44004801* 77

Side Panel and Bracket Assembly
44056702*P 77
44056802* 77

Single V Sheave
M412931 91

Sleeve
44050601 33

Slot Card Plate Assembly
44089501 41

Snap Bushing
M400770 ..... 71, 75, 137, 139, 141, 143
M402542 ..... 173, 175, 177
M411826 71
70178701 17

Solenoid Valve DIN Connector
70370301P 123

Spacer
M401402 83
44024001 91

Spark Igniter
M406934P 107, 109, 115
M410905P 107

Spray Paint
286P4 77
297P4 77
298P4P 77

Spud Holder Assembly
M406810 ..... 107, 109, 115

Start Switch
70108501 ..... 19, 27

Steam Coil
M400637P 123

Steam Heater Assembly
44020401P 123

Steam Pressure Label
902303 123

Steam Solenoid
70351011P 123
70351012 123

Steam Stand Box
44007501 123

Steam Valve
F8322902 123
F8322903 123

Steam Valve Coil
M412258 123
70205701P 123

Stove Limit Harness Assembly
M413691 113

Support Bearing
70448701 97

Switch
M400947 21

Switch Assembly
70413401 71

Switch Hole Plug
44057801B 57
44057801Q 57
44057801W 57

Switch Plate
M413236 ..... 27, 29

T

Tailpiece
44092201 ..... 107, 109, 115
44092202 ..... 107, 109, 115

Temperature Control Bracket
44018601 ..... 19, 27, 35

Temperature Kit
70475001P 19, 25

Temperature Knob
44020503 ..... 19, 27
44104601 ..... 23, 29

Temperature Selector Bracket
70350201 23

Temperature Selector Switch
511711 ..... 23, 29

Temperature Selector Switch Bracket
70391701 29

Tension Plate Assembly
M414405 ..... 91, 93, 99

Terminal Block
M405364 ..... 137, 139, 141, 143
M412537 ..... 145, 147, 149, 151, 153, 161, 165, 169
M412538 ..... 155, 157, 159, 163, 167, 171
M412631 ..... 145, 147, 149, 151, 153, 155, 157, 159, 161, 163, 165, 167, 169, 171
M412632 ..... 145, 147, 149, 151, 153, 155, 157, 159, 161, 163, 165, 167, 169, 171
M413865 161, 163, 165, 167, 169, 171, 173, 175, 177
430642 ..... 137, 139, 141, 143

Terminal Strip
M413542 ..... 137, 139, 141, 143

Thermistor
M414704 75
44064701 17

Thermistor Bracket Assembly
44051201 75

Thermistor Cable
44016901P 75

Thermodisc Bracket
M400838 75

Thermostat Bracket
M406882 113

info@zipnasklade.ru
8(800)500-69-51

N/A items do not appear in index.

© Copyright, Alliance Laundry Systems LLC – DO NOT COPY or TRANSMIT

Thermostat Cover
M414477 ..... 75, 113

Thermostat Module
431347P 19, 25

Thimble Vane Assembly
M400503 127
M413382 127

Timer
M412079P 27
70131701P 25
70131801P 27

Timer Control Assembly
70175301P 19

Timer Knob
70082101 27

Timer Motor
70218201 21
70218301 21

Timing Cam
M400732P 21
M400733P 21
M400734P 21
M400735P 21
M400736P 21
M400737P 21
M400738P 21
M400739P 21
M400740P 21
M400741P 21

Top Cover
M414760 ..... 77, 123

Top Cover Pan
M414676P 77

Transformer
M412412P 155, 157, 163, 171
M412477P 145, 147, 149, 153, 161, 169
M414228P 137, 141, 147, 151, 165
M414229P 139, 143, 159, 167
M414230P 137
M414312P 137
44074401 ..... 139, 143

Transformer Harness
44043101 ..... 135, 147, 151, 159, 167

Transformer Harness Assembly
M412641 ..... 145, 147, 149, 153, 155, 157, 161, 163, 169, 171
M412642 ..... 145, 147, 149, 153, 161, 169
M414028 ..... 135, 159, 167
M414029 ..... 135, 147, 151, 159, 167
M414076 ..... 147, 151

Trunnion and Bearing Assembly
M4640P3 87
M4641P3 87

Trunnion Assembly
M413833P 83
M413836 83
44036801P 83

Trunnion Housing
M413826 85

Trunnion Housing Assembly
M413832 87

Trunnion Kit
M413834P 83
44261801 83

Tumbler Dolly Kit
M4379P4 ..... 55, 57

V

Valve Rebuild Kit
F8379502 123

Valve Replacement Kit
M4909P3 107

Vane
M400253 121

Vane Assembly
M400541 121

W

Warning Label
M410892 ..... 65, 67
44127701 ..... 137, 139, 141, 143, 145, 147, 149, 151, 153, 155, 157, 159, 161, 163, 165, 167, 169, 171, 173, 175, 177

Washer
M400013 ..... 89, 91, 101, 105
M400014 ..... 91, 93, 101, 105
M400080 ..... 89, 91, 93, 99, 101, 105
M400991 101
M403958 ..... 89, 91, 93, 99
M405535 ..... 19, 97
M412188 ..... 91, 93, 99
02834 89
20103 85
430782 97
70261401 85
70265901 99
70270301 99
70409301 ..... 79, 81
91200 ..... 83, 85

Water Hose
F200116 17

Wire Guard
201595P 43

N/A items do not appear in index.

info@zipnasklade.ru
8(800)500-69-51

© Copyright, Alliance Laundry Systems LLC – DO NOT COPY or TRANSMIT

Notes

info@zipnasklade.ru
8(800)500-69-51

© Copyright, Alliance Laundry Systems LLC – DO NOT COPY or TRANSMIT