# Washer-Extractor

## Cabinet Freestanding

Refer to Page 5 for Model Numbers

Parts

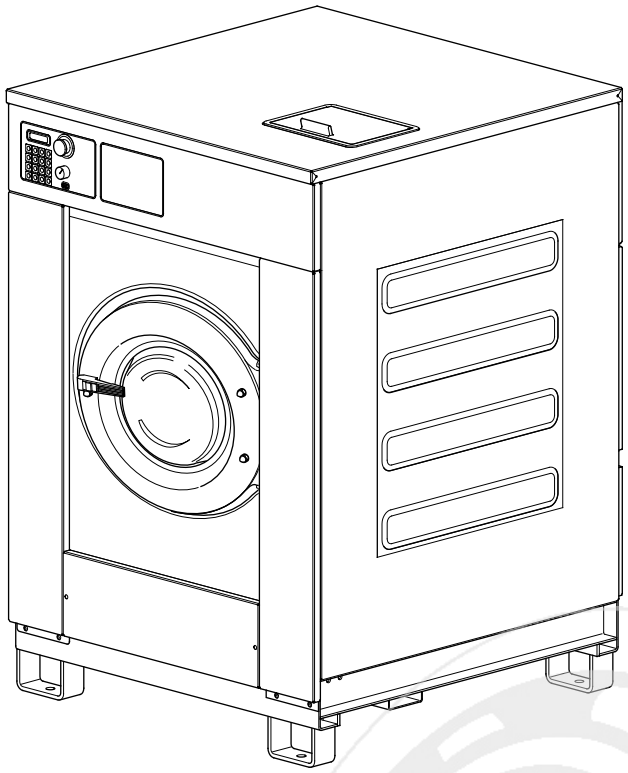

CFD8C_9001005

info@zipnasklade.ru
8(800)500-69-51

Alliance Laundry Systems

www.alliancelaundry.com

Part No. 9001005R21
February 2014

info@zipnasklade.ru
8(800)500-69-51

# Table of Contents


| Title | Page |
|---|---|
| Parts Ordering Information | 3 |
| Nameplate Location | 3 |
| Model Identification | 5 |
| Cabinet Freestanding Washer-Extractor Product Overview | 6 |
| Frame - 55 Pound Models | 8 |
| Frame - 75 Pound Models | 10 |
| Shock and Spring Assembly - 55 Pound Models Through 6/20/11 and 75 Pound Models Through 11/13/11 | 12 |
| Shock and Spring Assembly - 55 Pound Models Starting 6/21/11 | 14 |
| Shock and Spring Assembly - 75 Pound Models Starting 11/14/11 | 16 |
| Shell, Basket and Front Panel - Design 6 Models | 18 |
| Shell, Basket and Front Panel - Design 7 Models | 20 |
| Bearing Assembly - 55 Pound Models Through 1/30/11 | 22 |
| Bearing Assembly - 55 Pound Models Starting 1/31/11 | 24 |
| Bearing Assembly - 75 Pound Models | 26 |
| Basket, Pulley and Belt - 55 Pound Models | 28 |
| Basket, Pulley and Belt - 75 Pound Models | 30 |
| Motor - 55 Pound Models | 32 |
| Motor - 75 Pound Models | 34 |
| Drain Assembly | 36 |
| Single Drain Assembly | 38 |
| Dual Drain Assembly | 40 |
| Door Lock | 42 |
| Door - Design 6 Models | 44 |
| Door - Design 7 Models Through 9/30/07 | 46 |
| Door - Design 7 Models Starting 10/1/07 | 48 |
| Door Handle | 50 |
| Control Panel - Models UX055PVXF7, UX55PVXF6 and UX55PVXF7 | 52 |
| Control Panel - All Models Except UX055PVXF7, UX55PVXF6 and UX55PVXF7 | 54 |
| Control Module Through February 2006 - 55 Pound Models | 56 |
| Control Module Through February 2006 - 75 Pound Models | 58 |
| Control Module Starting March 2006 | 60 |
| Front, Left Side and Upper Back Panels - 55 Pound Models Except Models UX055PVXF7, UX55PVXF6 and UX55PVXF7 | 62 |
| Front, Left Side and Upper Back Panels - Models UX055PVXF7, UX55PVXF6 and UX55PVXF7 | 64 |
| Front, Left Side and Upper Back Panels - 75 Pound Models Through 9/30/08 | 66 |
| Front, Left Side and Upper Back Panels - 75 Pound Models Starting 10/1/08 Through 11/13/11 | 68 |
| Front, Left Side and Upper Back Panels - 75 Pound Models Starting 11/14/11 | 70 |
| Top, Right Side and Lower Back Panels - Models UX055PVXF7, UX55PVXF6 and UX55PVXF7 | 72 |
| Top, Right Side and Lower Back Panels - All Models Except UX055PVXF7, UX55PVXF6 and UX55PVXF7 | 74 |
| Fill Plumbing - Models UX055PVXF7, UX55PVXF6 and UX55PVXF7 | 76 |
| Fill Plumbing - All Models Except UX055PVXF7, UX55PVXF6 and UX55PVXF7 | 78 |



info@zipnasklade.ru
8(800)500-69-51



© Copyright 2014, Alliance Laundry Systems LLC

All rights reserved. No part of the contents of this book may be reproduced or transmitted in any form or by any means without the expressed written consent of the publisher.

Upper Back Panel - 55 Pound Models ..... 80
Upper Back Panel - 75 Pound Models ..... 82
Upper Back Panel - 55 Pound Models Starting Serial No. 0605755253 and 75 Pound Models Starting Serial No. 060775059 ..... 84
Balance Switch ..... 86
Supply Dispenser - Models UX055PVXF7, UX55PVXF6 and UX55PVXF7 ..... 88
Supply Dispenser - All Models Except UX055PVXF7, UX55PVXF6 and UX55PVXF7 ..... 90
Electric Heating Option ..... 92
Steam Heating Option ..... 94
Parts Index ..... 97

info@zipnasklade.ru
8(800)500-69-51


© Copyright, Alliance Laundry Systems LLC – DO NOT COPY or TRANSMIT

# Parts Ordering Information

If literature or replacement parts are required, contact the source from whom the machine was purchased or contact Alliance Laundry Systems at (920) 748-3950 for the name and address of the nearest authorized parts distributor.

For technical assistance, call either of the numbers listed below:

(920) 748-3121 Ripon, Wisconsin

+32 56 41 20 54 Wevelgem, Belgium

# Nameplate Location

When calling or writing about your product, be sure to mention model and serial numbers. Model and serial numbers are located on nameplate(s).

info@zipnasklade.ru
8(800)500-69-51


© Copyright, Alliance Laundry Systems LLC – DO NOT COPY or TRANSMIT

# Notes

info@zipnasklade.ru
8(800)500-69-51


© Copyright, Alliance Laundry Systems LLC – DO NOT COPY or TRANSMIT

# Model Identification

Information in this manual is applicable to these washer-extractor models:

HX055PVNU7
HX055PVQU7
HX055PVXU7
HX075PVNU7
HX075PVPU7
HX075PVQU7
HX55PVNU6
HX55PVNU7
HX55PVQU6
HX55PVQU7
HX55PVXU6
HX55PVXU7
HX75PVNU6
HX75PVNU7
HX75PVPU7
HX75PVQU6
HX75PVQU7

SX055PVNU7
SX055PVPU7
SX055PVQU7
SX055PVXU7
SX075PVNU7
SX075PVPU7
SX075PVQU7
SX55PVNU6
SX55PVNU7
SX55PVPU6
SX55PVPU7
SX55PVQU6
SX55PVQU7
SX55PVXU6
SX55PVXU7
SX75PVNU6
SX75PVNU7
SX75PVPU7
SX75PVQU6
SX75PVQU7

UX055PVNU7
UX055PVPU7
UX055PVQU7
UX055PVXF7
UX055PVXU7
UX075PVNU7
UX075PVPU7
UX075PVQU7
UX55PVNU6
UX55PVNU7
UX55PVPU6
UX55PVPU7
UX55PVQU6
UX55PVQU7
UX55PVXF6
UX55PVXF7
UX55PVXU6
UX55PVXU7
UX75PVNU6
UX75PVNU7
UX75PVPU6
UX75PVPU7
UX75PVQU6
UX75PVQU7

info@zipnasklade.ru
8(800)500-69-51


© Copyright, Alliance Laundry Systems LLC – DO NOT COPY or TRANSMIT

# Cabinet Freestanding Washer-Extractor Product Overview

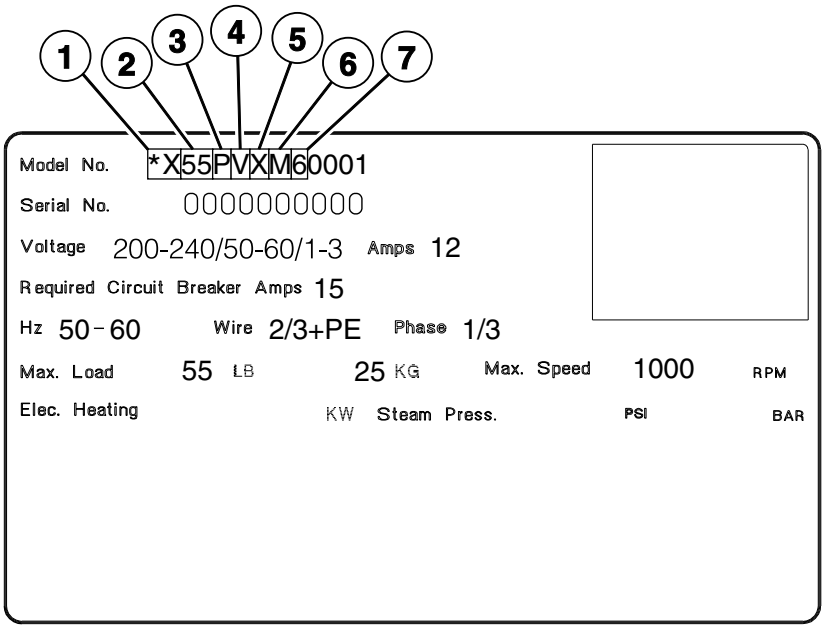


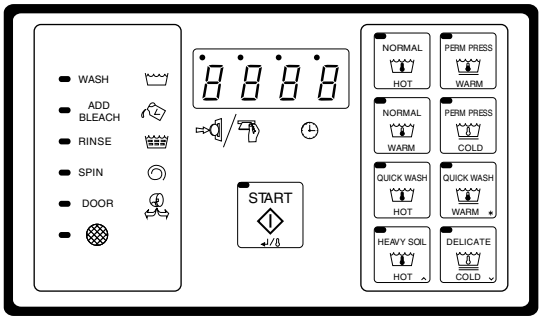


B Computer (Domestic)

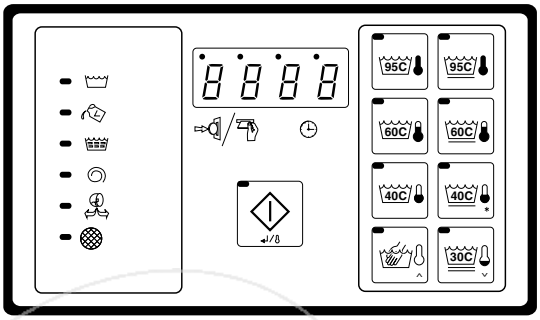


B Computer (International)

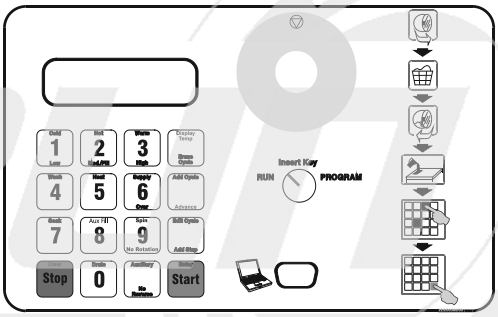


WE-8 Micro

CFD266P_9001005

info@zipnasklade.ru
8(800)500-69-51


© Copyright, Alliance Laundry Systems LLC – DO NOT COPY or TRANSMIT

# Cabinet Freestanding Washer-Extractor Product Overview

| REF | PART NO. | DESCRIPTION | COMMENTS |
|---|---|---|---|
| **1** | - | Product Family | HX<br>NX<br>SX<br>UX |
| **2** | - | Capacity (Pounds) | 18<br>25<br>30<br>35<br>55 or 055<br>75 or 075<br>100<br>135<br>165 |
| **3** | - | Control | B (B Computer)<br>P (WE-8 Micro) |
| **4** | - | Speed | V (Variable) |
| **5** | - | Voltage | N (440-480/50-60/3/3)<br>P (380-415/50-60/3/3)<br>Q (200-240/50-60/3/3)<br>X (200-240/50-60/1/3) |
| **6** | - | OEM | A<br>F<br>M<br>U |
| **7** | - | Design | 6 and 7 |

info@zipnasklade.ru
8(800)500-69-51


© Copyright, Alliance Laundry Systems LLC – DO NOT COPY or TRANSMIT

# Frame - 55 Pound Models

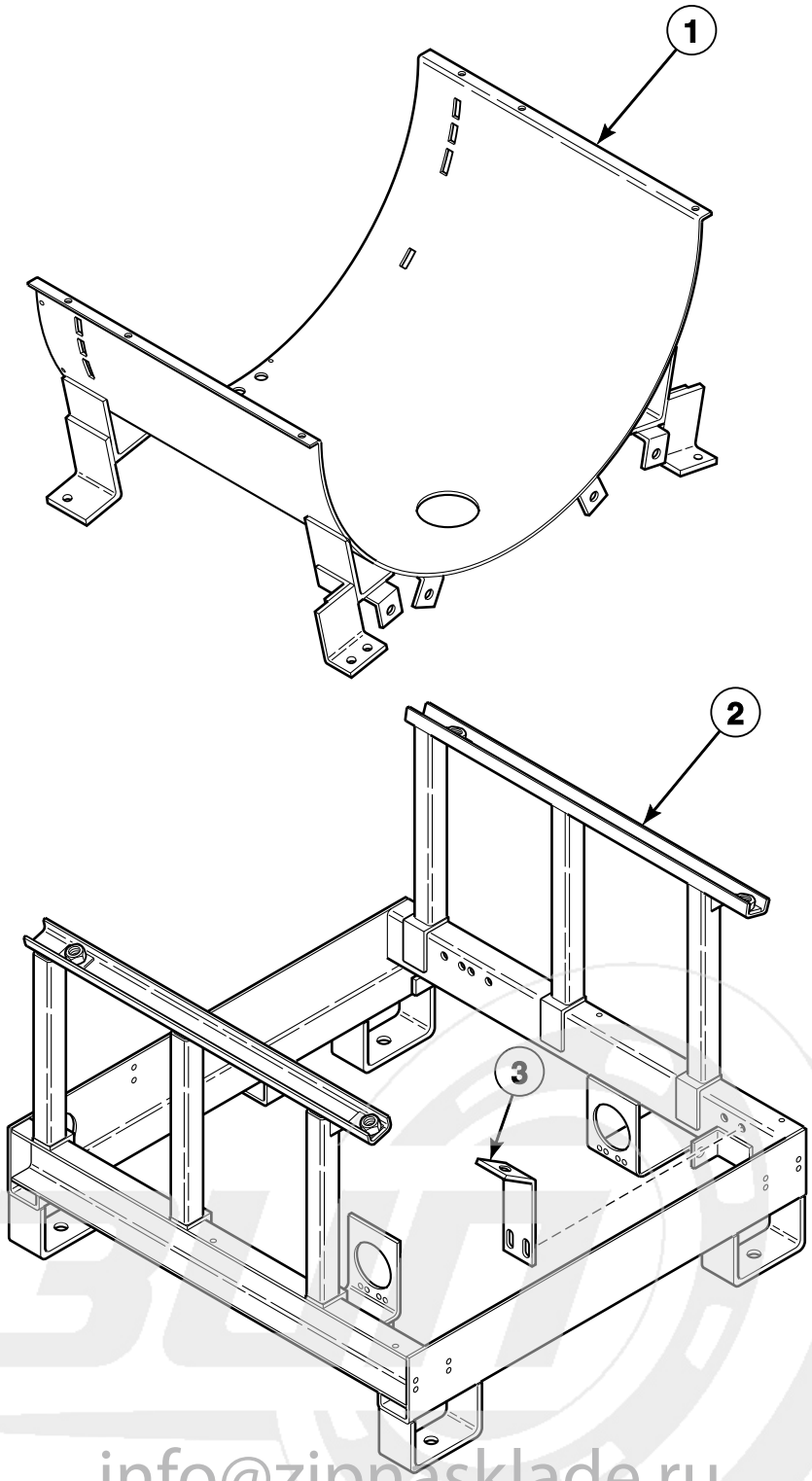


CFD110P_9001005

info@zipnasklade.ru
8(800)500-69-51


© Copyright, Alliance Laundry Systems LLC – DO NOT COPY or TRANSMIT

# Frame - 55 Pound Models

| REF | PART NO. | DESCRIPTION | COMMENTS |
|---|---|---|---|
| **1** | 9001025 | Tub Support | |
| **2** | 9001101 | Frame | |
| **3** | 9001771 | Shipping Brace | |

info@zipnasklade.ru
8(800)500-69-51


© Copyright, Alliance Laundry Systems LLC – DO NOT COPY or TRANSMIT

# Frame - 75 Pound Models

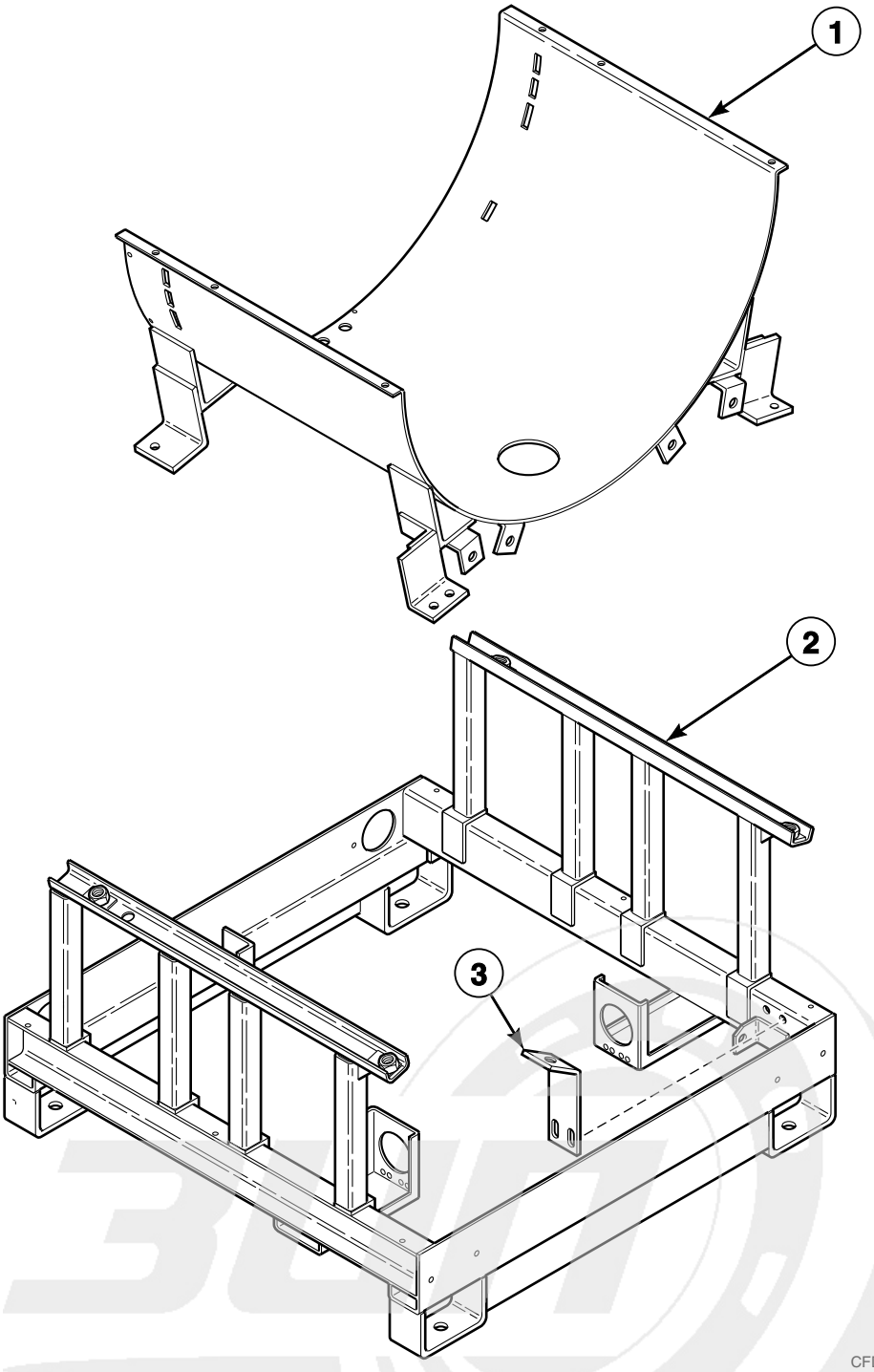


CFD111P_9001005

info@zipnasklade.ru
8(800)500-69-51


© Copyright, Alliance Laundry Systems LLC – DO NOT COPY or TRANSMIT

# Frame - 75 Pound Models

| REF | PART NO. | DESCRIPTION | COMMENTS |
|---|---|---|---|
| **1** | 9001016 | Tub Support | |
| **2** | 9001100 | Frame | |
| **3** | 9001772 | Shipping Brace | |

info@zipnasklade.ru
8(800)500-69-51


© Copyright, Alliance Laundry Systems LLC – DO NOT COPY or TRANSMIT

# Shock and Spring Assembly - 55 Pound Models Through 6/20/11 and 75 Pound Models Through 11/13/11

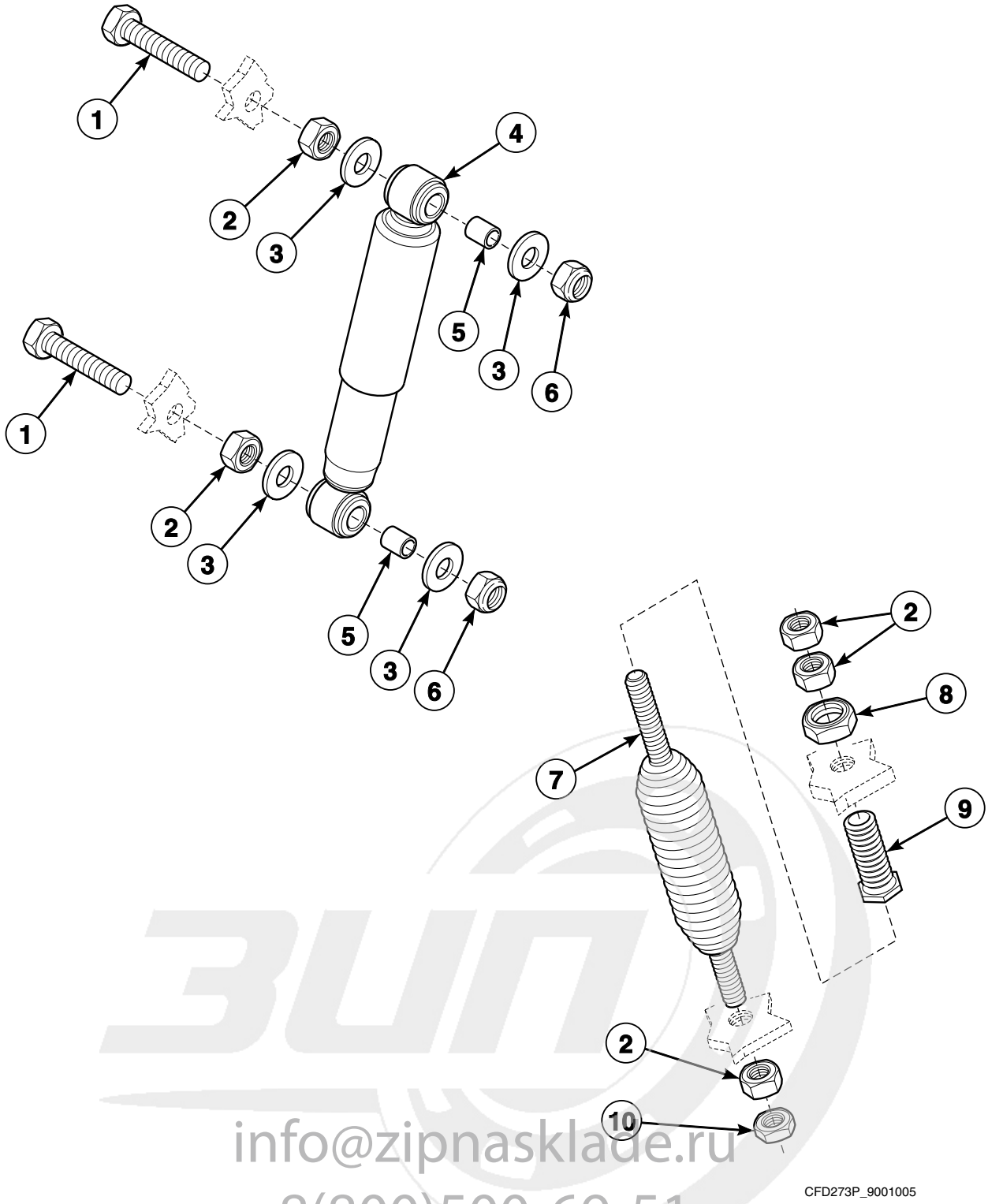


info@zipnasklade.ru
8(800)500-69-51


© Copyright, Alliance Laundry Systems LLC – DO NOT COPY or TRANSMIT

# Shock and Spring Assembly - 55 Pound Models Through 6/20/11 and 75 Pound Models Through 11/13/11

| REF | PART NO. | DESCRIPTION | COMMENTS |
|---|---|---|---|
| | B12419101 | Shock Absorber Service Kit | 55 pound models; Used to convert to the dual shock absorber configuration |
| | B12460901 | Shock Absorber Service Kit | 75 pound models; Used to convert to the dual shock absorber configuration |
| **1** | 206/00153/00 | Bolt | |
| **2** | 9001255 | Nut | |
| **3** | 9001223 | Washer | |
| **4** | 9001617 | Shock Absorber | Includes 2 of item 5 |
| **5** | 211/00137/10 | Shock Absorber Bushing | |
| **6** | 9001266 | Nut | |
| **7** | B12456301 | Suspension Spring | 55 pound models |
| | B12440101 | Suspension Spring | 75 pound models |
| **8** | 9001256 | Nut | |
| **9** | 9001557 | Bolt | |
| **10** | 9001257 | Nut | |

info@zipnasklade.ru
8(800)500-69-51


© Copyright, Alliance Laundry Systems LLC – DO NOT COPY or TRANSMIT

# Shock and Spring Assembly - 55 Pound Models Starting 6/21/11

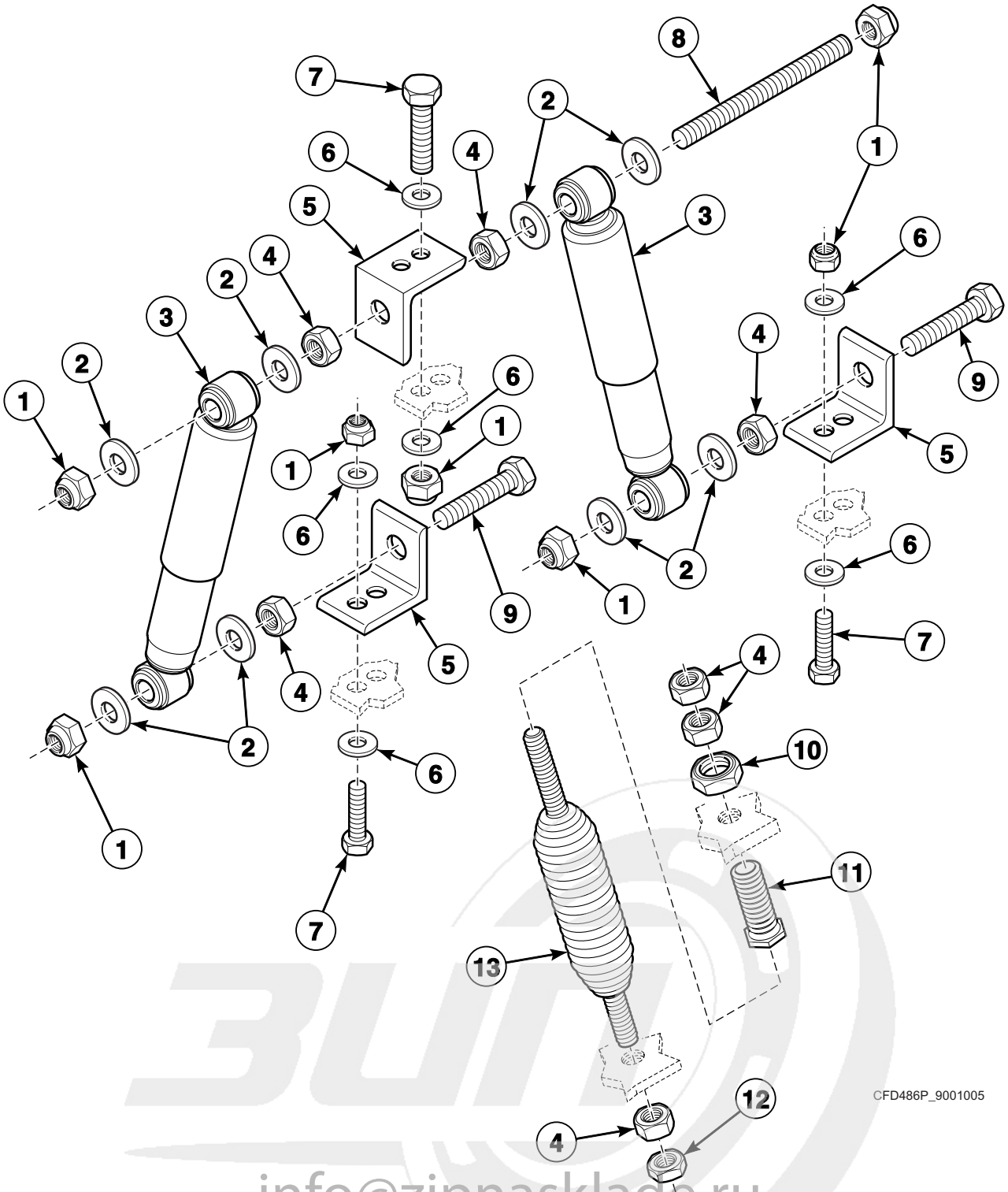


info@zipnasklade.ru
8(800)500-69-51


© Copyright, Alliance Laundry Systems LLC – DO NOT COPY or TRANSMIT

# Shock and Spring Assembly - 55 Pound Models Starting 6/21/11

| REF | PART NO. | DESCRIPTION | COMMENTS |
|---|---|---|---|
| | B12419101 | Shock Absorber Service Kit | Includes items 1-6, 8, 9, 206/00119/00 Bolt, 204/00110/00 Nut, 111/10101/00 Dispenser Front Mounting Plate, 111/10102/00 Dispenser Rear Mounting Plate, 206/00027/00 Bolt, 202/00004/00 Washer, 204/00114/00 Nut, B12419501 Small Caliber and B12419401 Large Caliber |
| **1** | 9001266 | Nut | |
| **2** | 9001208 | Washer | |
| **3** | 9001617P | Shock Absorber | |
| **4** | 9001255 | Nut | |
| **5** | B12418401 | Support | |
| **6** | 9001216 | Washer | |
| **7** | 206/00087/00 | Bolt | |
| **8** | B12511601 | Threaded Rod | |
| **9** | 206/00153/00 | Bolt | |
| **10** | 9001256 | Nut | |
| **11** | 9001557 | Bolt | |
| **12** | 9001257 | Nut | |
| **13** | B12456301 | Suspension Spring | |

info@zipnasklade.ru
8(800)500-69-51


© Copyright, Alliance Laundry Systems LLC – DO NOT COPY or TRANSMIT

# Shock and Spring Assembly - 75 Pound Models Starting 11/14/11

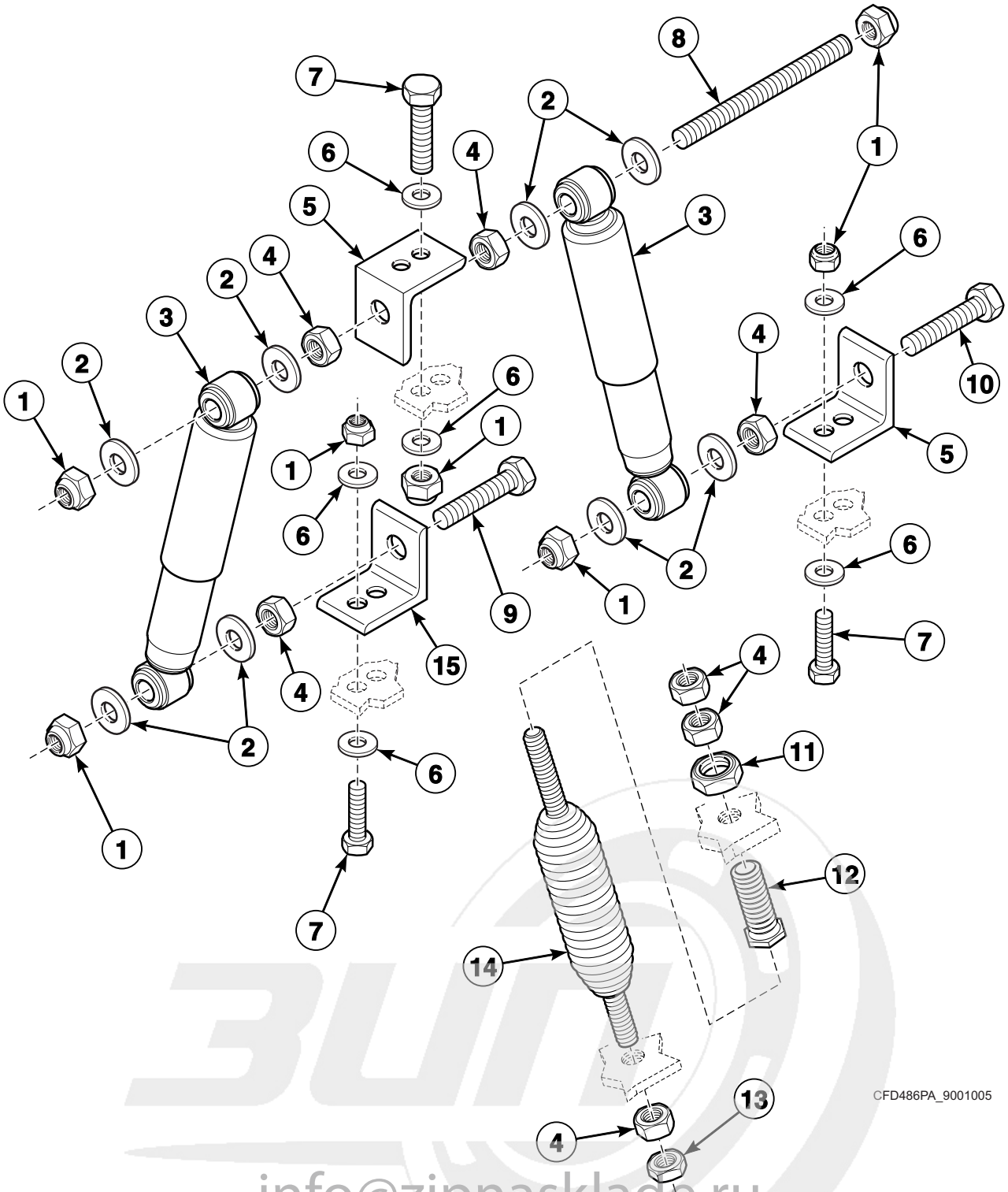


info@zipnasklade.ru
8(800)500-69-51


© Copyright, Alliance Laundry Systems LLC – DO NOT COPY or TRANSMIT

# Shock and Spring Assembly - 75 Pound Models Starting 11/14/11

| REF | PART NO. | DESCRIPTION | COMMENTS |
|---|---|---|---|
| | B12460901 | Shock Absorber Service Kit | Includes items 1-6, 8-10, and 15, 206/00119/00 Bolt, 204/00110/00 Nut, B12459801 Out-of-Balance Frame, B12456101 Support Bracket, B12456201 Support Bracket, 206/00027/00 Bolt, 202/00004/00 Washer, 204/00114/00 Nut, B12463301 Small Caliber and B12463201 Large Caliber |
| **1** | 9001266 | Nut | |
| **2** | 9001208 | Washer | |
| **3** | 9001617P | Shock Absorber | |
| **4** | 9001255 | Nut | |
| **5** | B12455401 | Support | |
| **6** | 9001216 | Washer | |
| **7** | 206/00087/00 | Bolt | |
| **8** | B12511601 | Threaded Rod | |
| **9** | 206/00153/00 | Bolt | |
| **10** | B12455301 | Support | |
| **11** | 9001256 | Nut | |
| **12** | 9001557 | Bolt | |
| **13** | 9001257 | Nut | |
| **14** | B12456301 | Suspension Spring | |
| **15** | B12418401 | Support | |

info@zipnasklade.ru
8(800)500-69-51


© Copyright, Alliance Laundry Systems LLC – DO NOT COPY or TRANSMIT

# Shell, Basket and Front Panel - Design 6 Models

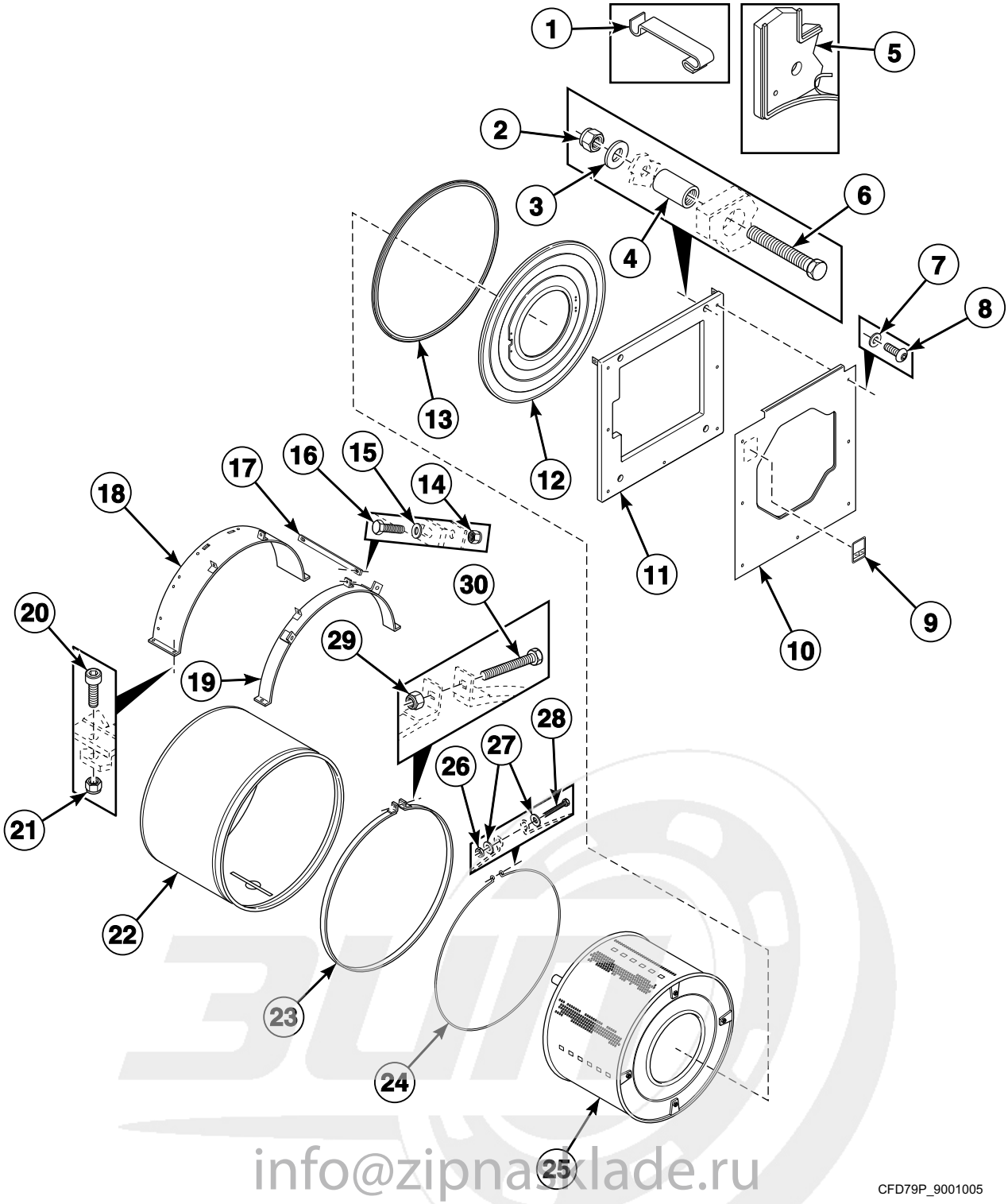


info@zipnaklade.ru
8(800)500-69-51


© Copyright, Alliance Laundry Systems LLC – DO NOT COPY or TRANSMIT

# Shell, Basket and Front Panel - Design 6 Models

| REF | PART NO. | DESCRIPTION | COMMENTS |
|---|---|---|---|
| 1 | 9001464 | Tub Front Panel Clip | |
| 2 | 9001266 | Nut | |
| 3 | B12522101 | Washer | |
| 4 | 115/00151/00 | Spacer | |
| 5 | 9001607 | Gasket | |
| 6 | 9001306 | Bolt | |
| 7 | 9001214 | Washer | 55 pound models |
| | 9001233 | Washer | 75 pound models |
| 8 | 9001657 | Screw | 55 pound models |
| | 9001675 | Screw | 75 pound models |
| 9 | 9001741 | Door Handle Decal | |
| 10 | 9001096 | Door Front Panel | 55 pound models |
| | 9001088 | Door Front Panel | 75 pound models |
| 11 | 9001024 | Counterweight | 55 pound models |
| | 9001023 | Counterweight | 75 pound models |
| 12 | 9001139 | Tub Front | 55 pound models |
| | 9001130 | Front Panel | 75 pound models |
| 13 | 223/00242/30 | Tub Front Panel Gasket | 55 pound models |
| | 223/00242/50 | Front Panel Gasket | 75 pound models |
| 14 | 9001262 | Nut | |
| 15 | 9001216 | Washer | |
| 16 | 9001287 | Bolt | |
| 17 | 115/00125/00 | Tub Mount Rings Bracket | |
| 18 | 115/00162/00 | Tub Tightening Ring | |
| 19 | 115/00161/00 | Tub Front Mounting Strap | 55 pound models |
| | 115/00163/00 | Tub Tightening Ring | 75 pound models |
| 20 | 9001313 | Screw | |
| 21 | 9001264 | Nut | |
| 22 | 119/00213/11 | Tub | Model UX55PVXF6 |
| | B12330201 | Tub | All other 55 pound models; Standard |
| | B12330101 | Tub | All other 55 pound models; Electric heat |
| | B12330301 | Tub | All other 55 pound models; Electric and steam heat |
| | B12330601 | Tub | 75 pound models; Standard |
| | B12330501 | Tub | 75 pound models; Electric and steam heat |
| | 9001124 | Tub | 75 pound models; Steam heat |
| 23 | 9001138 | Tub Mounting Strap | 55 pound models |
| | 9001132 | Tub Strap | 75 pound models |
| 24 | 9001603 | Tub Clamp Ring | 55 pound models |
| | 9001598 | Tub Front Ring Clamp | 75 pound models |
| 25 | B12327101 | Cylinder and Shaft Assembly | 55 pound models; Models through 1/30/11 |
| | B12543201 | Basket Kit | 55 pound models; Models through 1/30/11; Includes B12380901 Basket and 3884P Bearing and Seal Kit |
| | B12380901 | Basket | 55 pound models; Models starting 1/31/11; 3 mm |
| | B12381001 | Basket | 55 pound models; Models starting 1/31/11; 9 mm |
| | B12327301 | Drum | 75 pound models; Models starting Serial No. 10040300103 |
| | B12537901 | Basket and Pulley Kit | Models through Serial No. 10040300102; Includes B12327301 Basket, 226/00150/00 Basket Pulley, 206/00056/00 Screw, 226/00152/00 Motor Pulley, 226/00151/00 Belt and 9001445 Key |
| 26 | 9001254 | Nut | |
| 27 | 9001214 | Washer | |
| 28 | 206/00032/00 | Bolt | |
| 29 | 9001264 | Nut | |
| 30 | 9001305 | Bolt | |

info@zipnas
8(800)500-69-51


© Copyright, Alliance Laundry Systems LLC – DO NOT COPY or TRANSMIT

# Shell, Basket and Front Panel - Design 7 Models

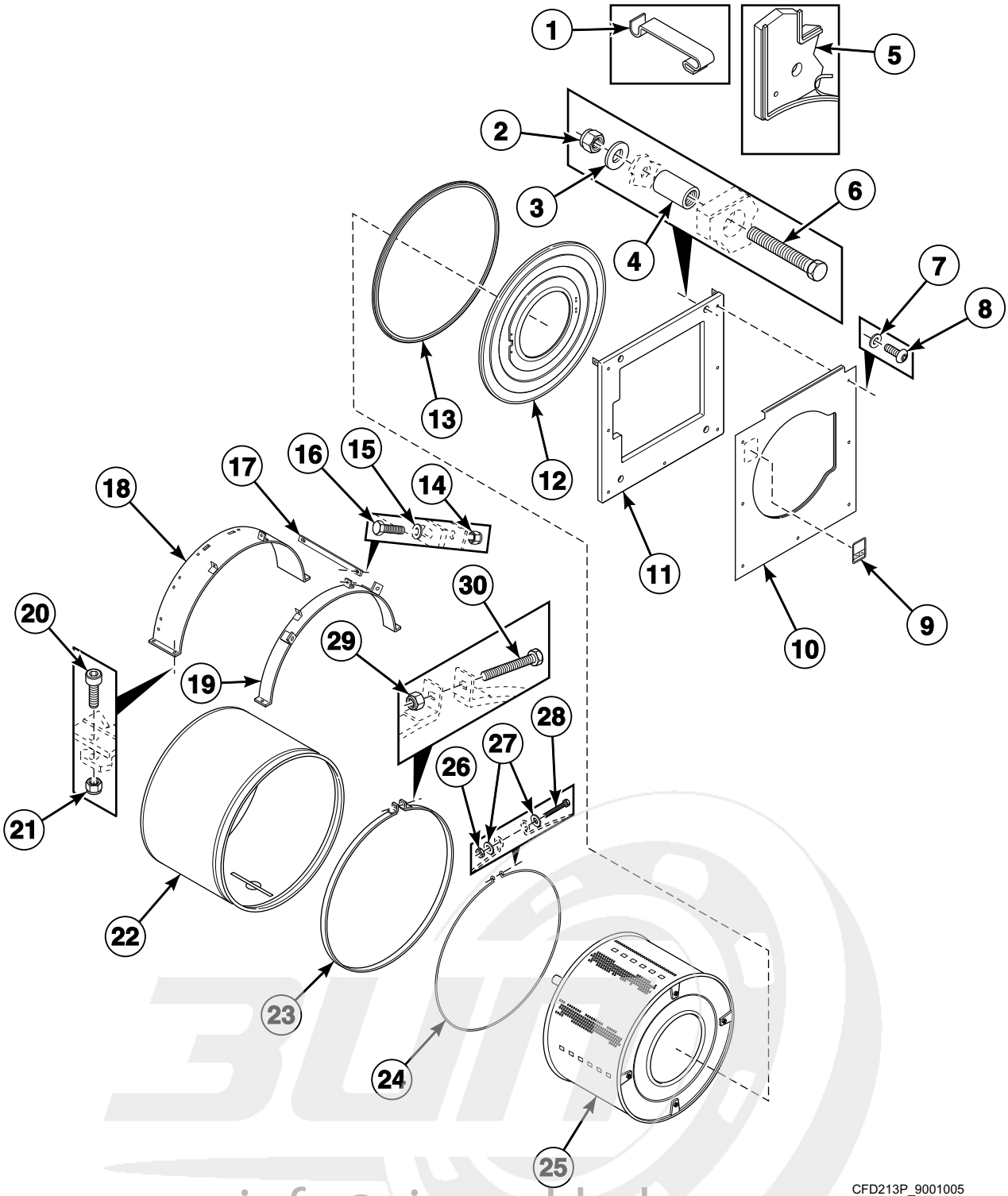


info@zipnasklade.ru
8(800)500-69-51


© Copyright, Alliance Laundry Systems LLC – DO NOT COPY or TRANSMIT

# Shell, Basket and Front Panel - Design 7 Models

| REF | PART NO. | DESCRIPTION | COMMENTS |
|---|---|---|---|
| 1 | 9001464 | Tub Front Panel Clip | |
| 2 | 9001266 | Nut | |
| 3 | 9001208 | Washer | |
| 4 | 115/00151/00 | Spacer | |
| 5 | 9001607 | Gasket | |
| 6 | 9001306 | Bolt | |
| 7 | 9001214 | Washer | 55 pound models |
| | 9001233 | Washer | 75 pound models |
| 8 | 9001657 | Screw | 55 pound models |
| | 9001675 | Screw | 75 pound models |
| 9 | 9001741 | Door Handle Decal | |
| 10 | 111/05015/00 | Door Front Panel | |
| 11 | 9001024 | Counterweight | 55 pound models |
| | 9001023 | Counterweight | 75 pound models |
| 12 | 9001139 | Tub Front | 55 pound models |
| | 9001130 | Front Panel | 75 pound models |
| 13 | 223/00242/30 | Tub Front Panel Gasket | 55 pound models |
| | 223/00242/50 | Front Panel Gasket | 75 pound models |
| 14 | 9001262 | Nut | |
| 15 | 9001216 | Washer | |
| 16 | 9001287 | Bolt | |
| 17 | 115/00125/00 | Tub Mount Rings Bracket | |
| 18 | 115/00162/00 | Tub Tightening Ring | |
| 19 | 115/00161/00 | Tub Front Mounting Strap | 55 pound models |
| | 115/00163/00 | Tub Tightening Ring | 75 pound models |
| 20 | 9001313 | Screw | |
| 21 | 9001264 | Nut | |
| 22 | 119/00213/11 | Tub | Models UX055PVXF7 and UX55PVXF7 |
| | B12330201 | Tub | All other 55 pound models; Standard |
| | B12330101 | Tub | All other 55 pound models; Electric heat |
| | B12330301 | Tub | All other 55 pound models; Electric and steam heat |
| | B12330601 | Tub | 75 pound models; Standard |
| | B12330501 | Tub | 75 pound models; Electric and steam heat |
| | 9001124 | Tub | 75 pound models; Steam heat |
| 23 | 9001138 | Tub Mounting Strap | 55 pound models |
| | 9001132 | Tub Strap | 75 pound models |
| 24 | 9001603 | Tub Clamp Ring | 55 pound models |
| | 9001598 | Tub Front Ring Clamp | 75 pound models |
| 25 | B12327101 | Cylinder and Shaft Assembly | 55 pound models; Models through 1/30/11 |
| | B12543201 | Basket Kit | 55 pound models; Models through 1/30/11; Includes B12380901 Basket and 3884P Bearing and Seal Kit |
| | B12380901 | Basket | 55 pound models; Models starting 1/31/11; 3 mm |
| | B12381001 | Basket | 55 pound models; Models starting 1/31/11; 9 mm |
| | B12327301 | Drum | 75 pound models; Models starting Serial No. 10040300103 |
| | B12537901 | Basket and Pulley Kit | Models through Serial No. 10040300102; Includes B12327301 Basket, 226/00150/00 Basket Pulley, 206/00056/00 Screw, 226/00152/00 Motor Pulley, 226/00151/00 Belt and 9001445 Key |
| 26 | 9001254 | Nut | |
| 27 | 9001214 | Washer | |
| 28 | 206/00032/00 | Bolt | |
| 29 | 9001264 | Nut | |
| 30 | 9001305 | Bolt | |

info@zipnaskaa.ru
8(800)500-69-51


© Copyright, Alliance Laundry Systems LLC – DO NOT COPY or TRANSMIT

# Bearing Assembly - 55 Pound Models Through 1/30/11

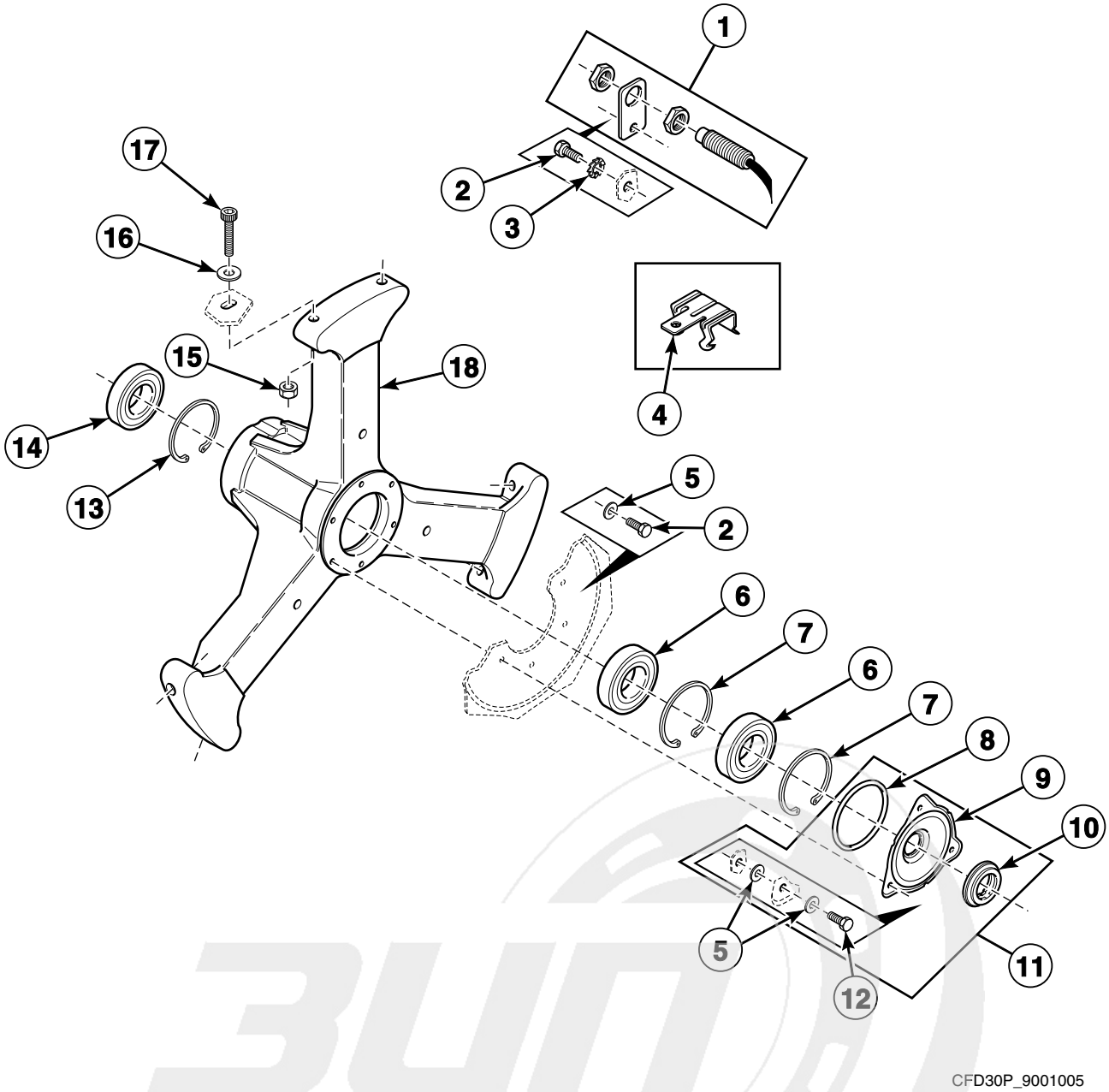


info@zipnasklade.ru
8(800)500-69-51


© Copyright, Alliance Laundry Systems LLC – DO NOT COPY or TRANSMIT

# Bearing Assembly - 55 Pound Models Through 1/30/11

| REF | PART NO. | DESCRIPTION | COMMENTS |
|---|---|---|---|
| | 891P3 | Bearing Replacement Kit | Includes items 5, 6, 11, 12, 14, 9001483 Counter Ring and 9001548 Tub Front Gasket |
| | 385P4 | Bearing Replacement Tool Kit | |
| **1** | 210/00074/00 | Speed Detector | |
| **2** | 9001274 | Bolt | |
| **3** | 9001241 | Washer | |
| **4** | 9001559 | Caddy Bracket | 4H58-4 |
| | 9001560 | Caddy Bracket | 4H912 |
| **5** | 9001225 | Washer | |
| **6** | 9001438 | Ball Bearing | |
| **7** | 9001440 | Retainer Ring | |
| **8** | 9001460 | O-Ring | |
| **9** | 9001116 | Seal Plate | |
| **10** | 9001482 | Shaft Seal | |
| **11** | 9001117 | Seal Holder Assembly | |
| **12** | 9001272 | Bolt | |
| **13** | 9001452 | Retainer Ring | |
| **14** | 212/00024/01 | Ball Bearing | |
| **15** | 9001266 | Nut | |
| **16** | 9001208 | Washer | |
| **17** | 9001697 | Screw | |
| **18** | 139/10006/00 | Bearing Housing Assembly | Includes items 6-7 and 13-14 |

info@zipnasklade.ru
8(800)500-69-51


© Copyright, Alliance Laundry Systems LLC – DO NOT COPY or TRANSMIT

# Bearing Assembly - 55 Pound Models Starting 1/31/11

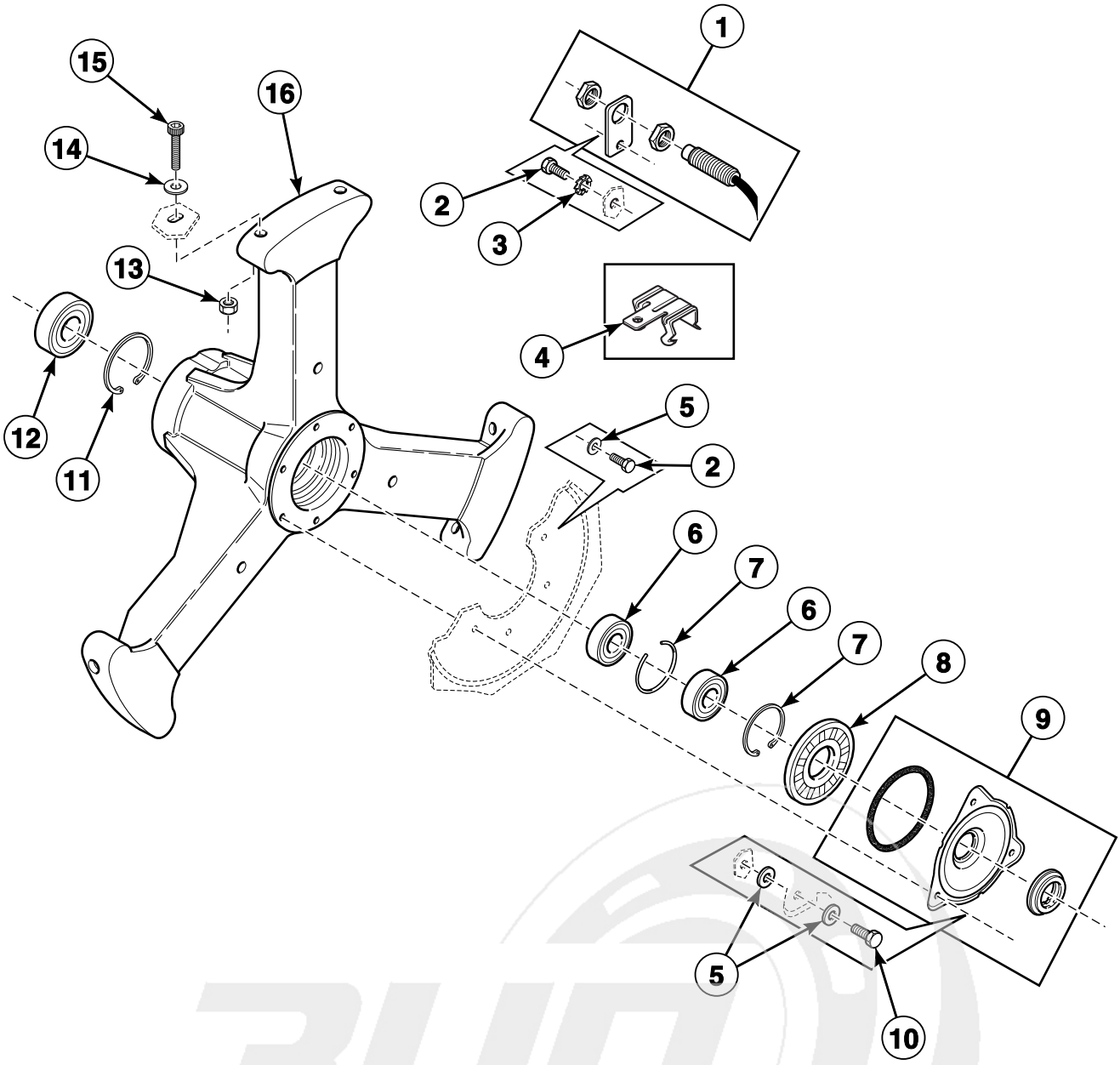


CFD546P_9001005

info@zipnasklade.ru
8(800)500-69-51


© Copyright, Alliance Laundry Systems LLC – DO NOT COPY or TRANSMIT

# Bearing Assembly - 55 Pound Models Starting 1/31/11

| REF | PART NO. | DESCRIPTION | COMMENTS |
|---|---|---|---|
| | 3884P | Bearing and Seal Kit | Includes items 5, 6, 8-10, 12, 9001483 Counter Ring and 223/00242/40 Tub Front Panel Gasket |
| | 381P3 | Bearing Replacement Tool Kit | |
| **1** | 210/00074/00 | Speed Detector | |
| **2** | 9001274 | Bolt | |
| **3** | 9001241 | Washer | |
| **4** | 9001559 | Caddy Bracket | 4H58-4 |
| | 9001560 | Caddy Bracket | 4H912 |
| **5** | 9001225 | Washer | |
| **6** | 9001438 | Ball Bearing | |
| **7** | 9001440 | Retainer Ring | |
| **8** | B12332301 | Lip Seal | |
| **9** | B12333701 | Seal Plate Assembly | |
| **10** | 9001272 | Bolt | |
| **11** | 9001452 | Retainer Ring | |
| **12** | F100134 | Bearing | |
| **13** | 9001266 | Nut | |
| **14** | 9001208 | Washer | |
| **15** | 9001697 | Screw | |
| **16** | 139/10006/00 | Bearing Housing Assembly | Includes items 6, 7, 11 and 12 |

info@zipnasklade.ru
8(800)500-69-51


© Copyright, Alliance Laundry Systems LLC – DO NOT COPY or TRANSMIT

# Bearing Assembly - 75 Pound Models

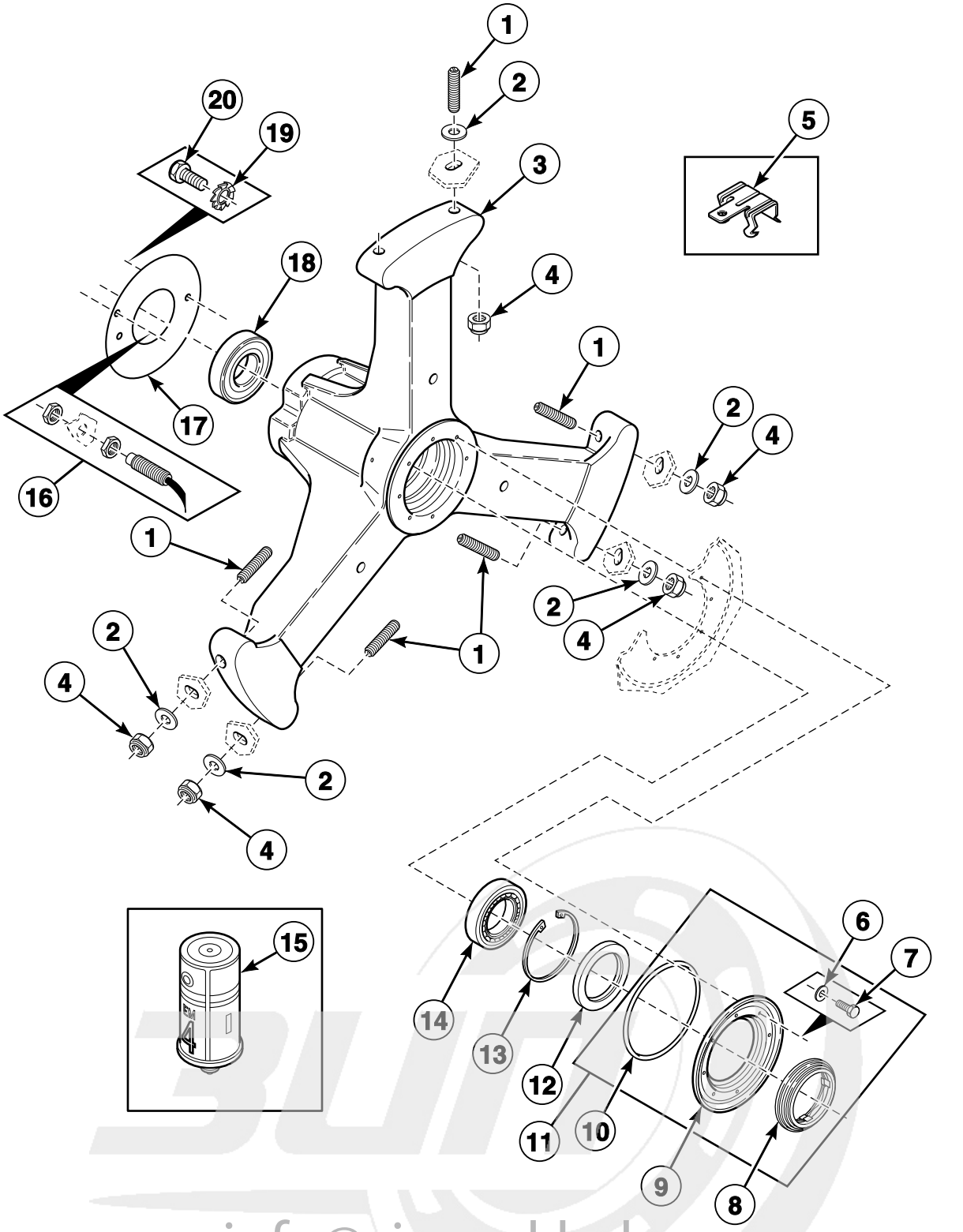


info@zipnasklade.ru
8(800)500-69-51


© Copyright, Alliance Laundry Systems LLC – DO NOT COPY or TRANSMIT

# Bearing Assembly - 75 Pound Models

| REF | PART NO. | DESCRIPTION | COMMENTS |
|---|---|---|---|
| | 892P3 | Bearing Replacement Kit | Includes 9001134 Shaft Seal, 9001548 Tub Front Gasket, 9001601 Counterring and items 6, 7, 11, 12, 14, 15 and 18 |
| | 385P4 | Bearing Replacement Tool Kit | |
| **1** | 9001697 | Screw | |
| **2** | 9001208 | Washer | |
| **3** | 9001451 | Bearing Housing Assembly | Includes items 14 and 18 |
| **4** | 9001266 | Nut | |
| **5** | 9001559 | Caddy Bracket | 4H58-4 |
| | 9001560 | Caddy Bracket | 4H912 |
| **6** | 201/00202/00 | Washer | |
| **7** | 9001274 | Bolt | |
| **8** | 9001744 | Seal Holder Assembly | |
| **9** | 9001133 | Seal Plate | |
| **10** | 9001599 | O-Ring | |
| **11** | 9001744 | Seal Holder Assembly | Includes items 6-10 |
| **12** | 9001441 | Grease Ring | |
| **13** | 9001440 | Retainer Ring | |
| **14** | 9001439 | Roller Bearing | |
| **15** | 212/00002/00 | Lubricator | FAG manufactured bearings |
| **16** | 210/00075/00 | Speed Detector | |
| **17** | 9001097 | Bearing Housing Cover | |
| **18** | 9001438 | Ball Bearing | |
| **19** | 9001240 | Washer | |
| **20** | 9001288 | Bolt | |

info@zipnasklade.ru
8(800)500-69-51


© Copyright, Alliance Laundry Systems LLC – DO NOT COPY or TRANSMIT

# Basket, Pulley and Belt - 55 Pound Models

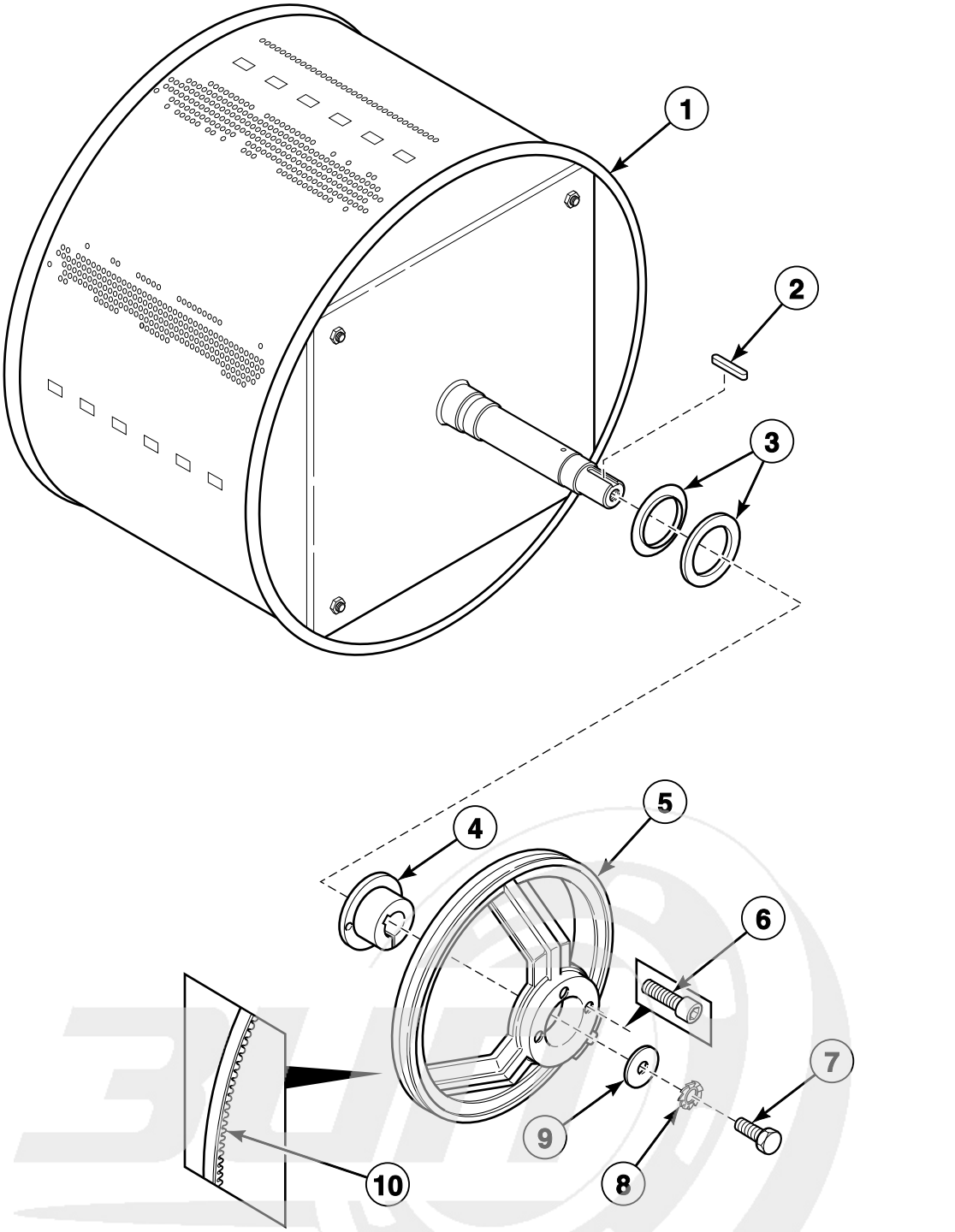


info@zipnasklade.ru
8(800)500-69-51


© Copyright, Alliance Laundry Systems LLC – DO NOT COPY or TRANSMIT

# Basket, Pulley and Belt - 55 Pound Models

| REF | PART NO. | DESCRIPTION | COMMENTS |
|---|---|---|---|
| 1 | B12327101 | Cylinder and Shaft Assembly | Models through 1/30/11 |
| | B12543201 | Basket Kit | Models through 1/30/11; Includes B12380901 Basket and 3884P Bearing and Seal Kit |
| | B12380901 | Basket | Models starting 1/31/11; 3 mm |
| | B12381001 | Basket | Models starting 1/31/11; 9 mm |
| 2 | 9001445 | Key | |
| 3 | 9001483 | Counter Ring | |
| 4 | 239/00013/00 | Pulley | |
| 5 | 967P3 | Pulleys and Belt Kit | Models through Serial No. 08010230051; Includes 185/00086/00 Pulley, 226/00148/00 Pulley and 226/00149/00P Belt; Converts V-belt to flat belt configuration |
| | 226/00148/00 | Pulley | Used with serpentine/poly-V belt |
| 6 | 9001901 | Bolt | 2 required |
| 7 | 9001284 | Bolt | |
| 8 | 9001238 | Washer | |
| 9 | 9001217 | Washer | |
| 10 | 9001569 | Belt | Models through Serial No. 08010230051; V-belt; 2 required |
| | 226/00149/00 | Belt | Models starting Serial No. 08010230052; Serpentine/poly-V; 1 required |

info@zipnasklade.ru
8(800)500-69-51


© Copyright, Alliance Laundry Systems LLC – DO NOT COPY or TRANSMIT

# Basket, Pulley and Belt - 75 Pound Models

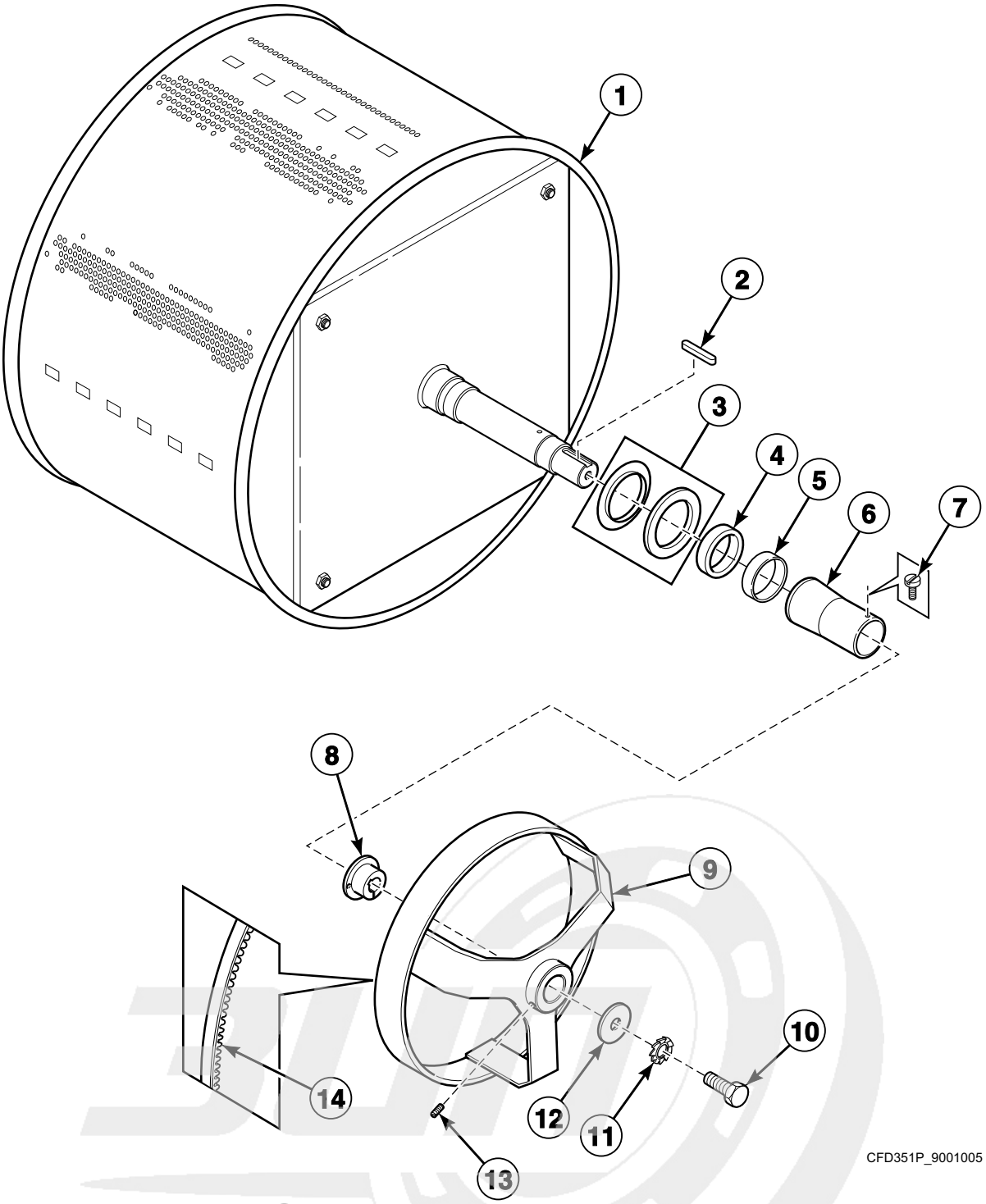


info@zipnasklade.ru
8(800)500-69-51


© Copyright, Alliance Laundry Systems LLC – DO NOT COPY or TRANSMIT

# Basket, Pulley and Belt - 75 Pound Models

| REF | PART NO. | DESCRIPTION | COMMENTS |
|---|---|---|---|
| 1 | B12537901 | Basket and Pulley Kit | Models through Serial No. 10040300102; Includes B12327301 Basket, 226/00150/00 Basket Pulley, 206/00056/00 Screw, 226/00152/00 Motor Pulley, 226/00151/00 Belt and 9001445 Key |
| | B12327301 | Drum | Models starting Serial No. 10040300103 |
| 2 | 9001445 | Key | Models starting Serial No. 10040300103 |
| 3 | 9001601 | Counter Ring | |
| 4 | 9001134 | Shaft Seal | |
| 5 | 9001439 | Roller Bearing | |
| 6 | 9001602 | Bearing Spacer | |
| 7 | 9001335 | Screw | |
| 8 | 212/00009/00 | Pulley | Models through 12/31/07 |
| | 239/00013/00 | Pulley | Models starting 1/1/08 |
| 9 | 9001629 | Pulley | Models through Serial No. 10040300102 |
| | 226/00150/00 | Pulley | Models starting Serial No. 10040300103 |
| 10 | 9001284 | Bolt | |
| 11 | 9001238 | Washer | |
| 12 | 9001217 | Washer | |
| 13 | 206/00056/00 | Screw | Models starting Serial No. 10040300103 |
| 14 | 9001575 | V-Belt | 3 required; Models through Serial No. 10040300102 |
| | 226/00151/00 | Belt | 1 required; Models starting Serial No. 10040300103 |

info@zipnasklade.ru
8(800)500-69-51


© Copyright, Alliance Laundry Systems LLC – DO NOT COPY or TRANSMIT

# Motor - 55 Pound Models

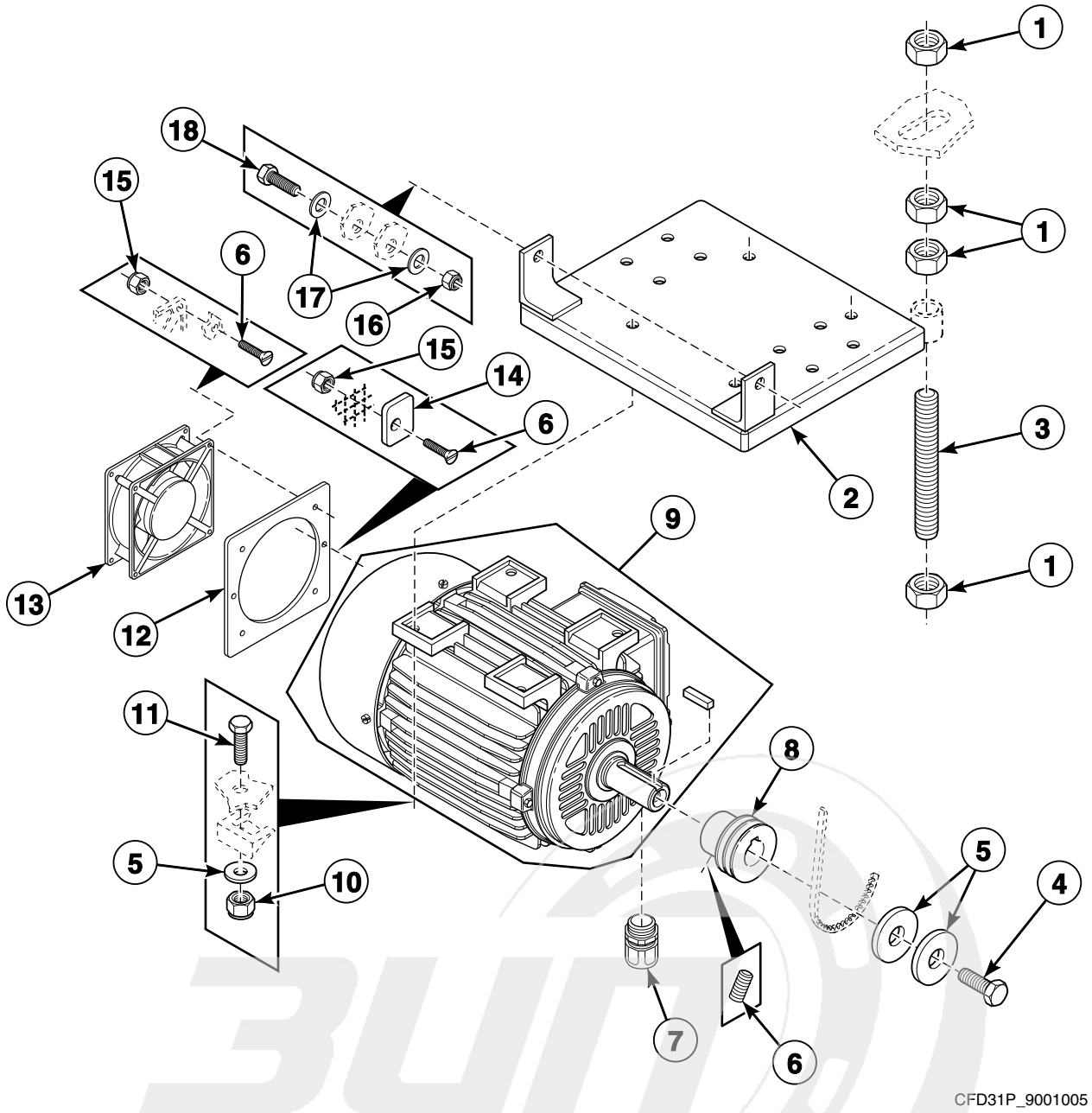


info@zipnasklade.ru
8(800)500-69-51


© Copyright, Alliance Laundry Systems LLC – DO NOT COPY or TRANSMIT

# Motor - 55 Pound Models

| REF | PART NO. | DESCRIPTION | COMMENTS |
|---|---|---|---|
| 1 | 9001257 | Nut | |
| 2 | 9001030 | Motor Plate | |
| 3 | 9001020 | Belt Adjusting Rod | |
| 4 | 9001286 | Bolt | |
| 5 | 9001211 | Washer | |
| 6 | 9001294 | Screw | |
| 7 | 9001432 | Cordlock | |
| 8 | 9001570 | Pulley | Models through Serial No. 08010230051 |
| | 185/00086/00 | Pulley | Models starting Serial No. 08010230052 |
| 9 | B12510901 | Motor | |
| 10 | 9001264 | Nut | |
| 11 | 9001283 | Bolt | |
| 12 | 9001055 | Intermediate Fan Motor Plate | |
| 13 | 9001375 | Cooling Fan | |
| 14 | 9001036 | Bearing Retainer Ring | |
| 15 | 9001268 | Nut | |
| 16 | 9001266 | Nut | |
| 17 | 9001209 | Washer | |
| 18 | 9001307 | Bolt | |

info@zipnasklade.ru
8(800)500-69-51


© Copyright, Alliance Laundry Systems LLC – DO NOT COPY or TRANSMIT

# Motor - 75 Pound Models

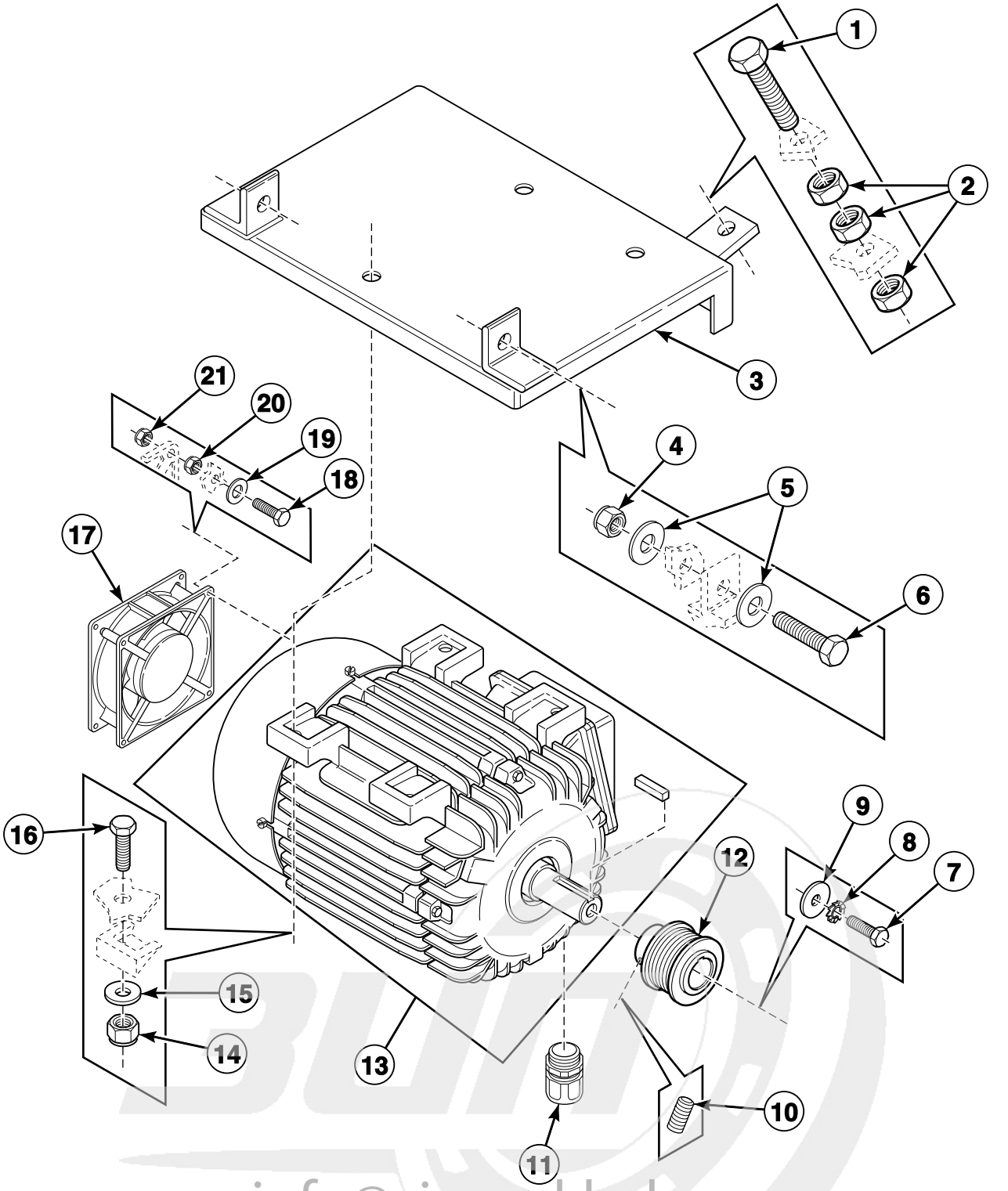


info@zipnasklade.ru
8(800)500-69-51


© Copyright, Alliance Laundry Systems LLC – DO NOT COPY or TRANSMIT

# Motor - 75 Pound Models

| REF | PART NO. | DESCRIPTION | COMMENTS |
|---|---|---|---|
| 1 | 9001297 | Bolt | |
| 2 | 9001255 | Nut | |
| 3 | 9001029 | Motor Plate | |
| 4 | 9001266 | Nut | |
| 5 | 9001208 | Washer | |
| 6 | 9001307 | Bolt | |
| 7 | 9001286 | Bolt | |
| 8 | 9001239 | Washer | |
| 9 | 9001211 | Washer | |
| 10 | 9001302 | Screw | Models through Serial No. 10040300102 |
| | 206/00056/00 | Screw | Models starting Serial No. 10040300103 |
| 11 | 9001432 | Cordlock | |
| 12 | 9001574 | Pulley | Models through Serial No. 10040300102 |
| | 226/00152/00 | Pulley | Models starting Serial No. 10040300103 |
| 13 | 9001576P | Motor | |
| 14 | 9001264 | Nut | |
| 15 | 9001211 | Washer | |
| 16 | 9001283 | Bolt | |
| 17 | 9001375 | Cooling Fan | |
| 18 | 9001329 | Screw | |
| 19 | 9001243 | Washer | |
| 20 | 9001252 | Nut | |
| 21 | 9001267 | Nut | |

info@zipnasklade.ru
8(800)500-69-51


© Copyright, Alliance Laundry Systems LLC – DO NOT COPY or TRANSMIT

# Drain Assembly

Models UX055PVXF7, UX55PVXF6 and UX55PVXF7

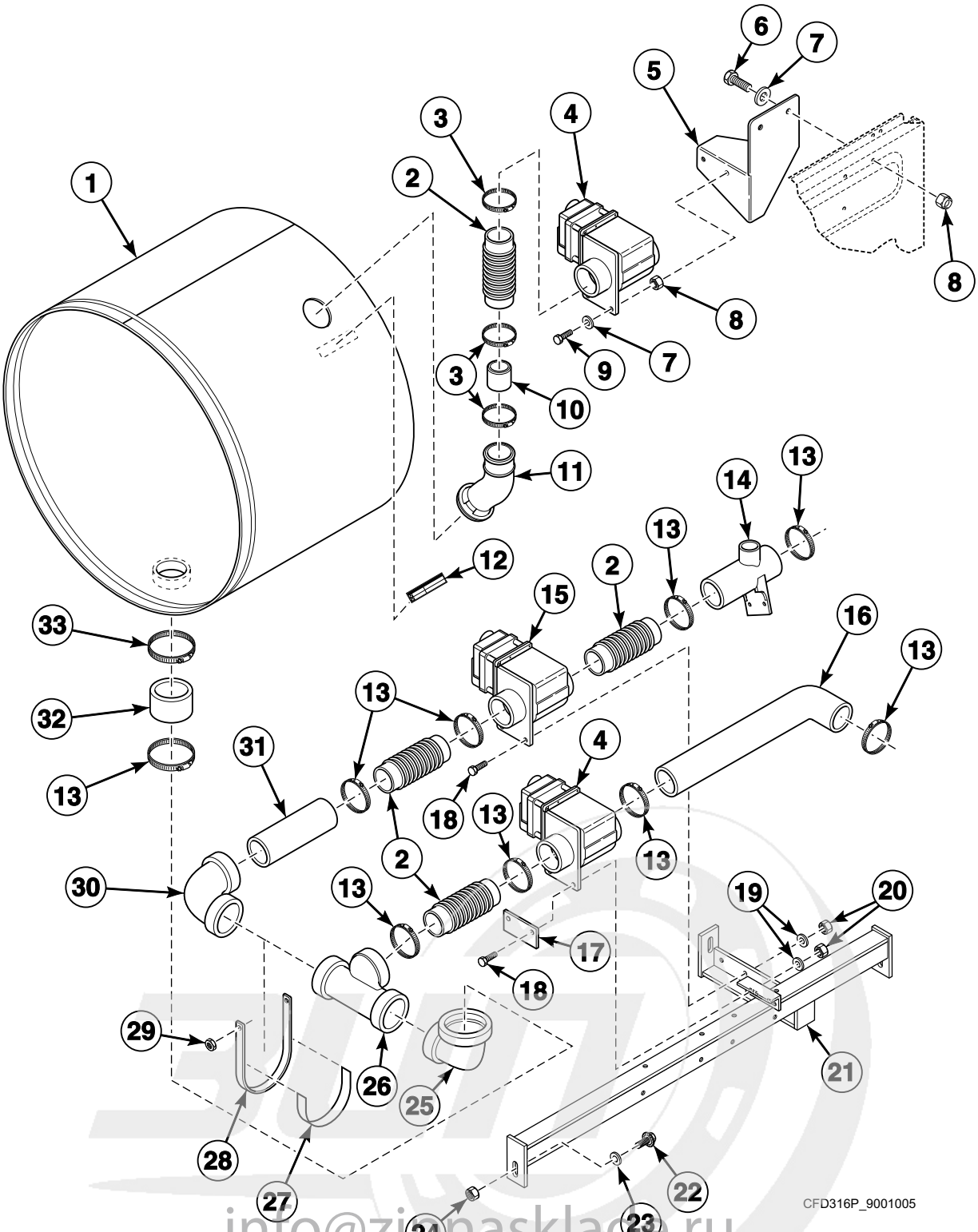


info@zipnasklade.ru
8(800)500-69-51


© Copyright, Alliance Laundry Systems LLC – DO NOT COPY or TRANSMIT

# Drain Assembly

| REF | PART NO. | DESCRIPTION | COMMENTS |
|---|---|---|---|
| | 210/00905/00 | Drain Valve Wiring Harness | |
| 1 | 119/00213/11 | Tub | |
| 2 | F200171 | Supply Hose | |
| 3 | 9001494 | Hose Clamp | |
| 4 | F0380632-00 | Drain Valve | |
| 5 | 111/10312/00 | Drain Valve Mounting Bracket | |
| 6 | 9001277 | Bolt | |
| 7 | 202/00101/00 | Washer | |
| 8 | 9001254 | Nut | |
| 9 | 9001275 | Bolt | |
| 10 | B12341901 | Coupling | |
| 11 | F0200236-01 | Supply Dispenser Hose | |
| 12 | 44127701 | Warning Label | |
| 13 | F200213 | Hose Clamp | |
| 14 | F0380318-00 | Drain Tee | |
| 15 | 803292 | Gravity Drain Valve | |
| 16 | F0150470-01 | Hose | |
| 17 | 111/10318/00 | Drain Valve Bracket Plate | |
| 18 | F430939 | Screw | |
| 19 | F431147 | Washer | |
| 20 | F431024 | Nut | |
| 21 | F0638013-00 | Drain Valve Bracket | |
| 22 | F430927 | Screw | |
| 23 | M400080 | Washer | |
| 24 | F430218 | Nut | |
| 25 | 223/00363/00 | Elbow | |
| 26 | 223/00369/00 | Tee | |
| 27 | 246/00149/00 | Gasket | 1.2 meters used |
| 28 | 111/10300/00 | Drain Support Bracket | |
| 29 | 9001266 | Nut | |
| 30 | 223/00368/00 | Drain Elbow | |
| 31 | 223/00370/00 | Pipe | |
| 32 | 9001526 | Drain Valve to Drain Pipe Hose | |
| 33 | F200201 | Hose Clamp | |

info@zipnasklade.ru
8(800)500-69-51


© Copyright, Alliance Laundry Systems LLC – DO NOT COPY or TRANSMIT

# Single Drain Assembly

All Models Except UX055PVXF7, UX55PVXF6 and UX55PVXF7

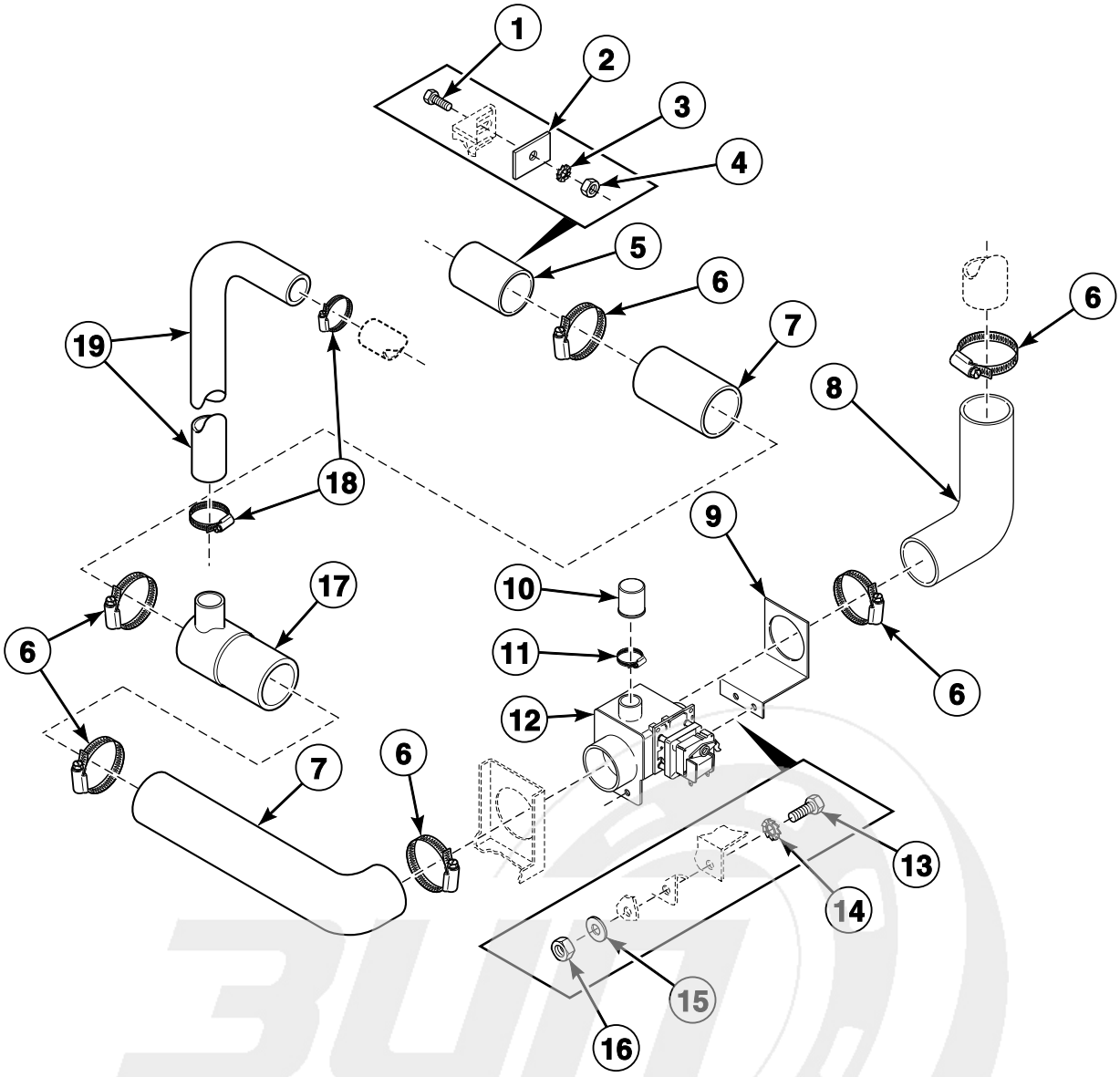


info@zipnasklade.ru
8(800)500-69-51


© Copyright, Alliance Laundry Systems LLC – DO NOT COPY or TRANSMIT

# Single Drain Assembly

| REF | PART NO. | DESCRIPTION | COMMENTS |
|---|---|---|---|
| | 900/00261/UL00 | Drain Valve Harness | |
| 1 | 9001273 | Bolt | |
| 2 | 9001037 | Outlet Pipe Plate Assembly | |
| 3 | 9001241 | Washer | |
| 4 | 9001260 | Nut | |
| 5 | 9001518 | Drain Pipe | |
| 6 | 9001502 | Hose Clamp | |
| 7 | 9001526 | Drain Valve to Drain Pipe Hose | |
| 8 | 9001525 | Drain Tub to Drain Valve Hose | |
| 9 | 9001099 | Drain Valve Plate Assembly | |
| 10 | 9001503 | Drain Valve Overflow Plug | |
| 11 | 9001493 | Hose Clamp | |
| 12 | 9001355 | Drain Valve | |
| 13 | 9001287 | Bolt | |
| 14 | 9001240 | Washer | |
| 15 | 9001227 | Washer | |
| 16 | 9001249 | Nut | |
| 17 | 9001518 | Drain Pipe | |
| 18 | 9001494 | Hose Clamp | |
| 19 | 223/00131/00 | Overflow Hose | |

info@zipnasklade.ru
8(800)500-69-51


© Copyright, Alliance Laundry Systems LLC – DO NOT COPY or TRANSMIT

# Dual Drain Assembly

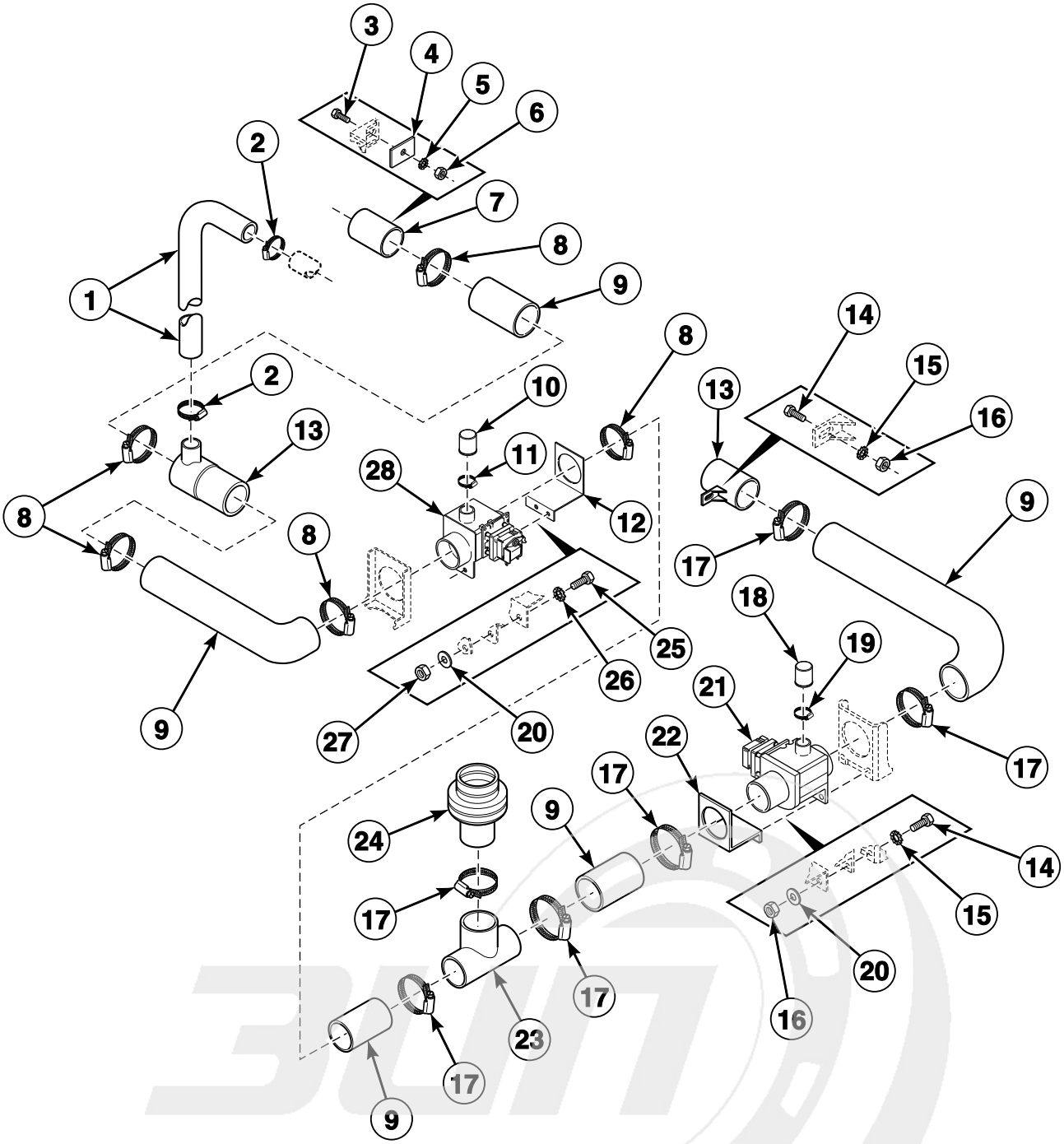


CFD113P_9001005

info@zipnasklade.ru
8(800)500-69-51


© Copyright, Alliance Laundry Systems LLC – DO NOT COPY or TRANSMIT

# Dual Drain Assembly

| REF | PART NO. | DESCRIPTION | COMMENTS |
|---|---|---|---|
| | 900/00261/UL00 | Drain Valve Harness | |
| | 831P3 | Drain Kit | Includes items 9 and 13-24, F200104100 2-Drain Harness and installation instructions |
| 1 | 223/00131/00 | Overflow Hose | |
| 2 | 9001494 | Hose Clamp | |
| 3 | 9001273 | Bolt | |
| 4 | 9001037 | Outlet Pipe Plate Assembly | |
| 5 | 9001241 | Washer | |
| 6 | 9001260 | Nut | |
| 7 | 9001518 | Drain Pipe | |
| 8 | 9001502 | Hose Clamp | |
| 9 | 9001526 | Drain Valve to Drain Pipe Hose | |
| 10 | 9001503 | Drain Valve Overflow Plug | |
| 11 | 9001493 | Hose Clamp | |
| 12 | 9001099 | Drain Valve Plate Assembly | |
| 13 | 9001518 | Drain Pipe | |
| 14 | 9001287 | Bolt | |
| 15 | 9001240 | Washer | |
| 16 | 9001260 | Nut | |
| 17 | 9001502 | Hose Clamp | |
| 18 | 9001503 | Drain Valve Overflow Plug | |
| 19 | 9001493 | Hose Clamp | |
| 20 | 9001227 | Washer | |
| 21 | 9001361 | Drain Valve | |
| 22 | 9001099 | Drain Valve Plate Assembly | |
| 23 | 253/00006/00 | T-Piece | |
| 24 | 223/00170/00 | Exhaust Valve Hose | |
| 25 | 9001287 | Bolt | |
| 26 | 9001240 | Washer | |
| 27 | 9001249 | Nut | |
| 28 | 9001355 | Drain Valve | |

info@zipnasklade.ru
8(800)500-69-51


© Copyright, Alliance Laundry Systems LLC – DO NOT COPY or TRANSMIT

# Door Lock

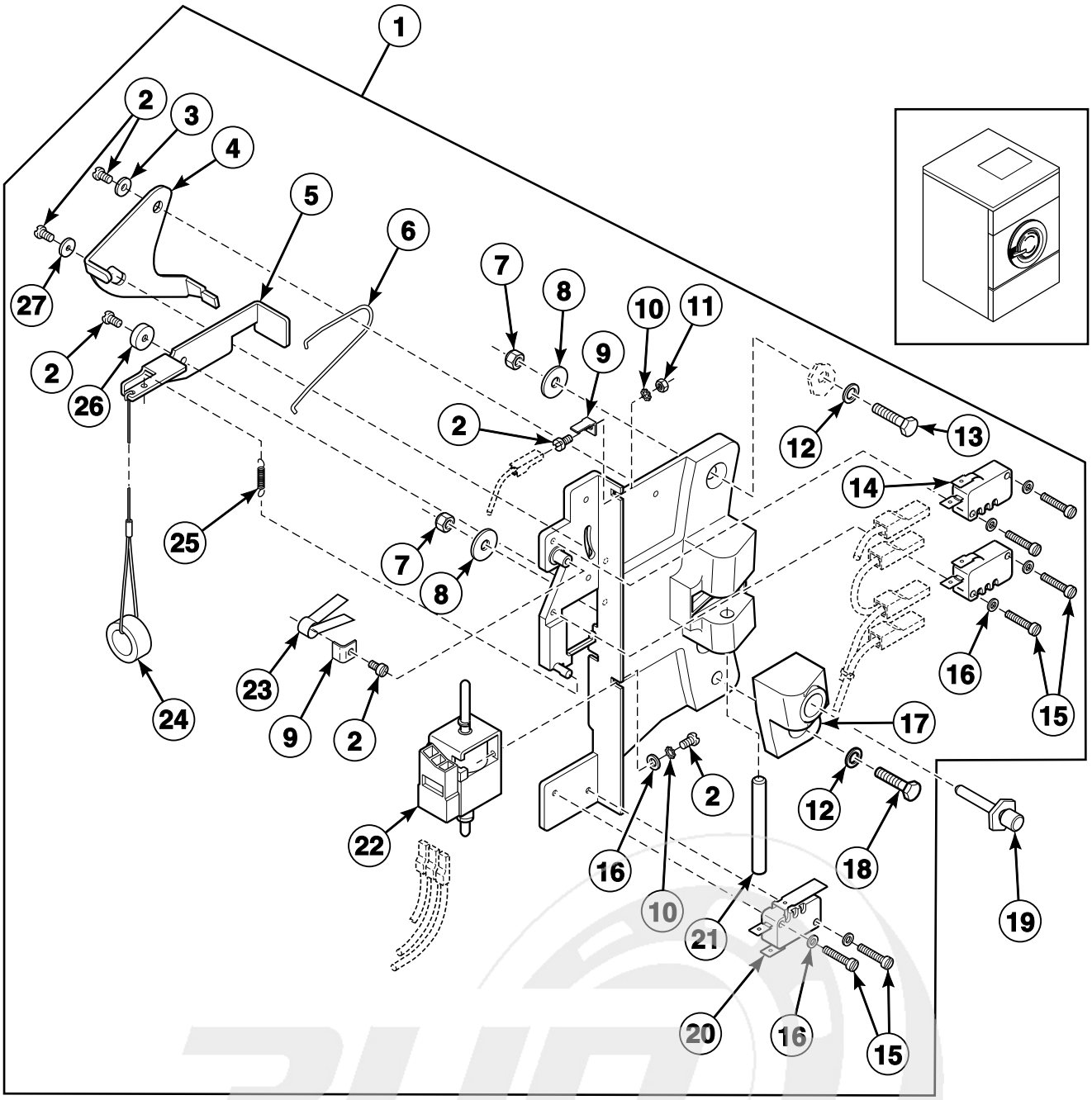


CFD543P_9001005

info@zipnasklade.ru
8(800)500-69-51


© Copyright, Alliance Laundry Systems LLC – DO NOT COPY or TRANSMIT

# Door Lock

| REF | PART NO. | DESCRIPTION | COMMENTS |
|---|---|---|---|
| 1 | B12517701 | Door Lock Assembly | |
| 2 | 207/00135/00 | Screw | |
| 3 | 9001221 | Washer | |
| 4 | 9001479 | Switch Lever | |
| 5 | 9001478 | Interlock Lever | |
| 6 | 9001553 | Lever Spring | |
| 7 | 9001254 | Nut | |
| 8 | 9001213 | Washer | |
| 9 | 9001419 | Ground Terminal | |
| 10 | 9001244 | Washer | |
| 11 | 9001253 | Nut | |
| 12 | 9001230 | Washer | |
| 13 | 9001273 | Bolt | |
| 14 | 9001371 | Door Lock Microswitch | |
| 15 | 9001324 | Screw | |
| 16 | 9001222 | Washer | |
| 17 | 9001998 | Door Lock Pin Bracket | |
| 18 | 9001949 | Bolt | |
| 19 | 9001997 | Door Lock Pin and Pivot Block Kit | |
| 20 | 9001372 | Light Microswitch | |
| 21 | 9001468 | Lock Shaft | |
| 22 | 209/00703/50 | Door Solenoid | |
| 23 | 9001558 | Door Lock Spring | |
| 24 | 9001950 | Door Release Wire | |
| 25 | 9001554 | Interlock Coil Spring | |
| 26 | 9001477 | Door Lock Spacer | |
| 27 | 202/00124/00 | Washer | |

info@zipnasklade.ru
8(800)500-69-51


© Copyright, Alliance Laundry Systems LLC – DO NOT COPY or TRANSMIT

# Door - Design 6 Models

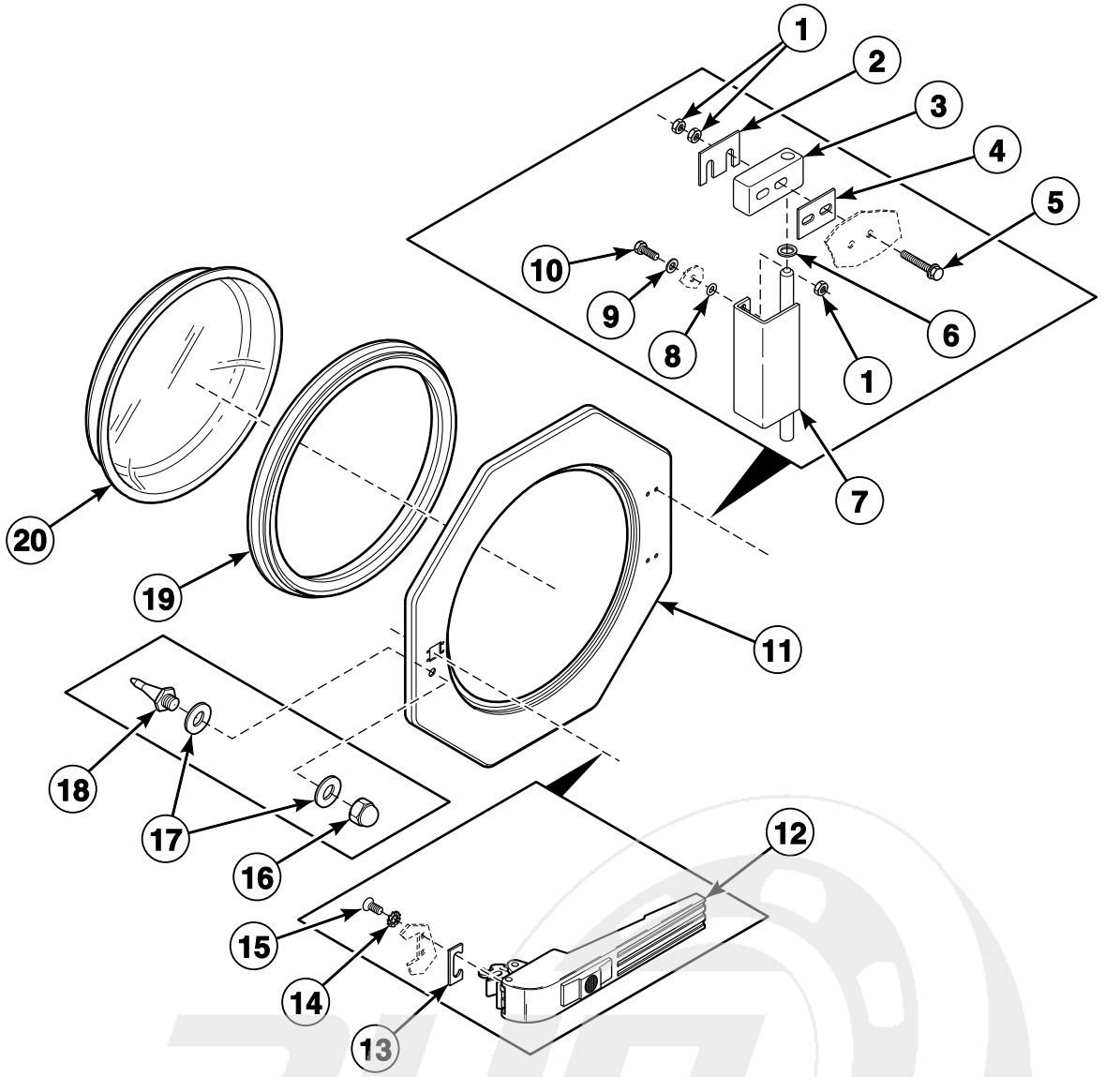


CFD34P_9001005

info@zipnasklade.ru
8(800)500-69-51


© Copyright, Alliance Laundry Systems LLC – DO NOT COPY or TRANSMIT

# Door - Design 6 Models

| REF | PART NO. | DESCRIPTION | COMMENTS |
|---|---|---|---|
| 1 | 9001260 | Nut | |
| 2 | 9001038 | Door Hinge Plate Assembly | |
| 3 | 9001628 | Door Hinge Block | |
| 4 | 9001105 | Door Hinge Spacer | 1.5 mm |
| | 9001106 | Door Hinge Spacer | 2 mm |
| 5 | 9001341 | Screw | |
| 6 | 9001232 | Washer | |
| 7 | 9001486 | Hinge | |
| 8 | 9001469 | O-Ring | |
| 9 | 9001230 | Washer | |
| 10 | 9001274 | Bolt | |
| 11 | 9001131 | Door | |
| 12 | 217/00055/00 | Door Handle | |
| 13 | 9001467 | Door Handle Stop | |
| 14 | 9001245 | Washer | |
| 15 | 9001326 | Screw | |
| 16 | 9001258 | Nut | |
| 17 | 202/00111/00 | Washer | |
| 18 | 9001997 | Door Lock Pin and Pivot Block Kit | Includes door lock pin |
| 19 | 9001501 | Door Glass Seal | |
| 20 | B12449801 | Door Glass | |

info@zipnasklade.ru
8(800)500-69-51


© Copyright, Alliance Laundry Systems LLC – DO NOT COPY or TRANSMIT

# Door - Design 7 Models Through 9/30/07

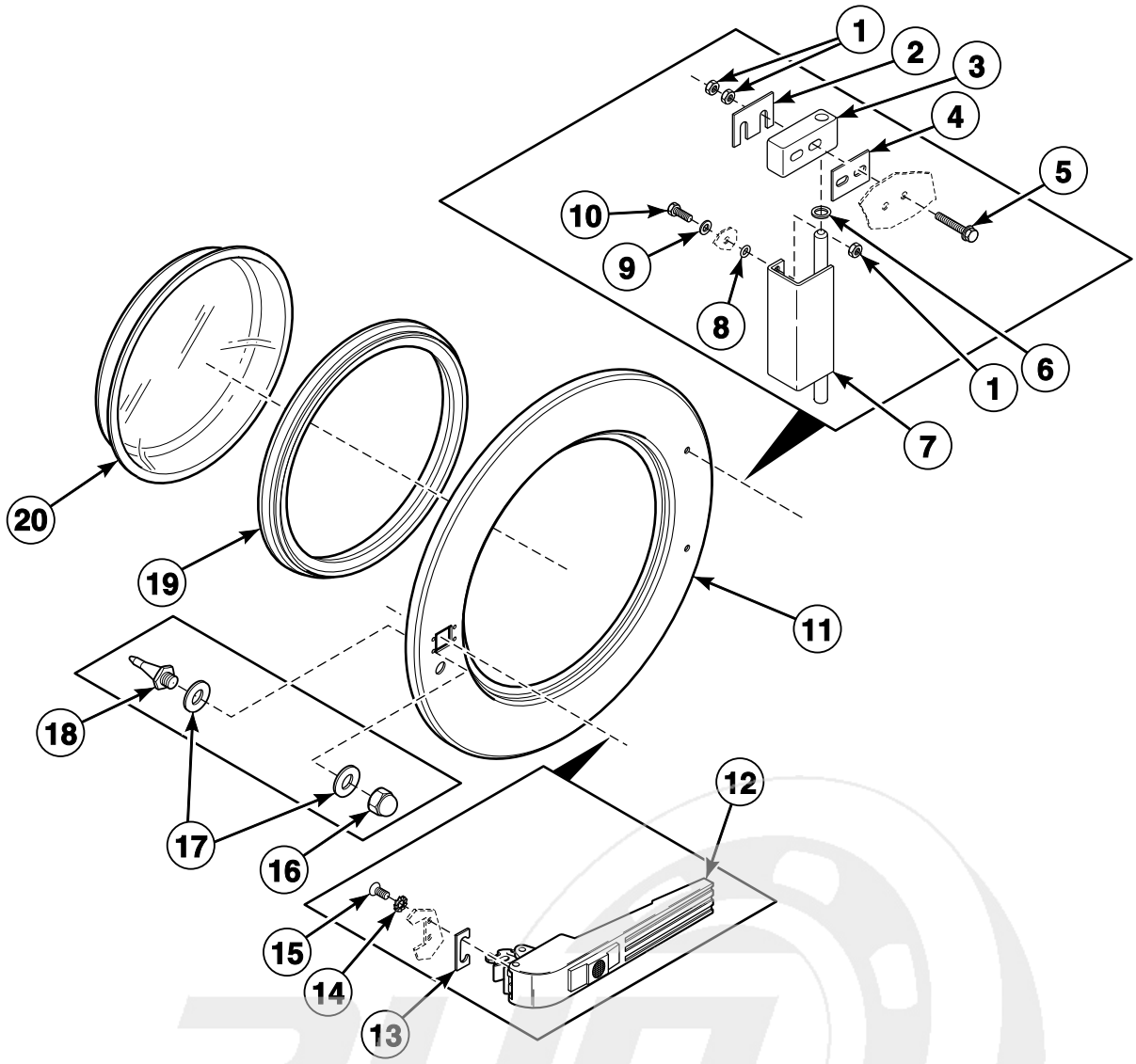


CFD207P_9001005

info@zipnasklade.ru
8(800)500-69-51


© Copyright, Alliance Laundry Systems LLC – DO NOT COPY or TRANSMIT

# Door - Design 7 Models Through 9/30/07

| REF | PART NO. | DESCRIPTION | COMMENTS |
|---|---|---|---|
| 1 | 9001260 | Nut | |
| 2 | 9001038 | Door Hinge Plate Assembly | |
| 3 | 9001628 | Door Hinge Block | |
| 4 | 9001105 | Door Hinge Spacer | 1.5 mm |
| | 9001106 | Door Hinge Spacer | 2 mm |
| 5 | 9001341 | Screw | |
| 6 | 9001232 | Washer | |
| 7 | 9001486 | Hinge | |
| 8 | 9001469 | O-Ring | |
| 9 | 9001230 | Washer | |
| 10 | 9001274 | Bolt | |
| 11 | 118/00125/00 | Door | |
| 12 | 217/00055/00 | Door Handle | |
| 13 | 9001467 | Door Handle Stop | |
| 14 | 9001245 | Washer | |
| 15 | 9001326 | Screw | |
| 16 | 9001258 | Nut | |
| 17 | 202/00111/00 | Washer | |
| 18 | 9001997 | Door Lock Pin and Pivot Block Kit | Includes door lock pin |
| 19 | 9001501 | Door Glass Seal | |
| 20 | B12449801 | Door Glass | |

info@zipnasklade.ru
8(800)500-69-51


© Copyright, Alliance Laundry Systems LLC – DO NOT COPY or TRANSMIT

# Door - Design 7 Models Starting 10/1/07

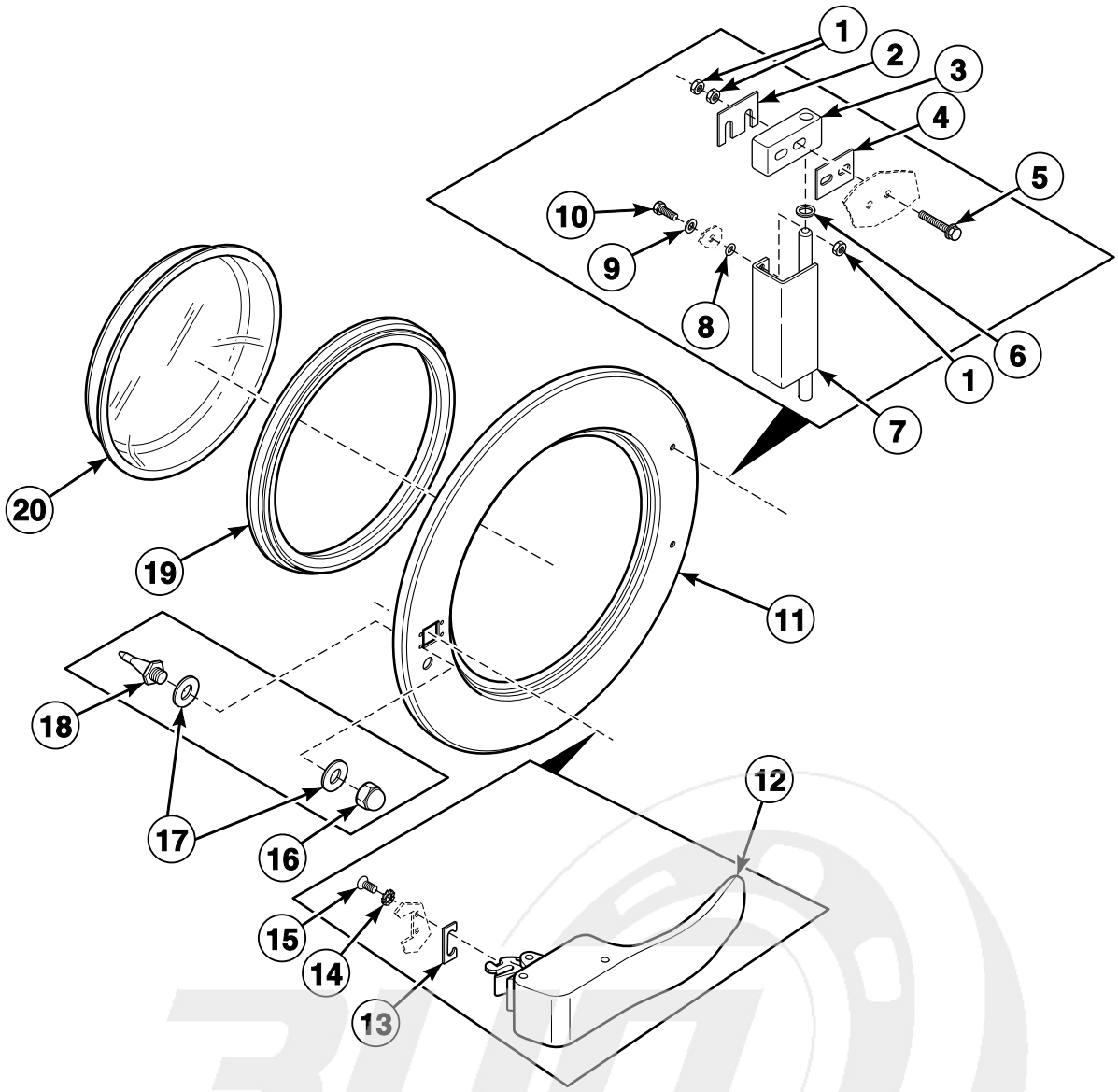


CFD263P_9001005

info@zipnasklade.ru
8(800)500-69-51


© Copyright, Alliance Laundry Systems LLC – DO NOT COPY or TRANSMIT

# Door - Design 7 Models Starting 10/1/07

| REF | PART NO. | DESCRIPTION | COMMENTS |
|---|---|---|---|
| 1 | 9001260 | Nut | |
| 2 | 9001038 | Door Hinge Plate Assembly | |
| 3 | 9001628 | Door Hinge Block | |
| 4 | 9001105 | Door Hinge Spacer | 1.5 mm |
| | 9001106 | Door Hinge Spacer | 2 mm |
| 5 | 9001341 | Screw | |
| 6 | 9001232 | Washer | |
| 7 | 9001486 | Hinge | |
| 8 | 9001469 | O-Ring | |
| 9 | 9001230 | Washer | |
| 10 | 9001274 | Bolt | |
| 11 | 118/00125/00 | Door | |
| 12 | 217/00065/00 | Door Handle | |
| 13 | 9001467 | Door Handle Stop | |
| 14 | 9001245 | Washer | |
| 15 | B12500801 | Screw | |
| 16 | 9001258 | Nut | |
| 17 | 202/00111/00 | Washer | |
| 18 | 9001997 | Door Lock Pin and Pivot Block Kit | Includes door lock pin |
| 19 | 9001501 | Door Glass Seal | |
| 20 | B12449801 | Door Glass | |

info@zipnasklade.ru
8(800)500-69-51


© Copyright, Alliance Laundry Systems LLC – DO NOT COPY or TRANSMIT

# Door Handle

Models Through 9/30/07

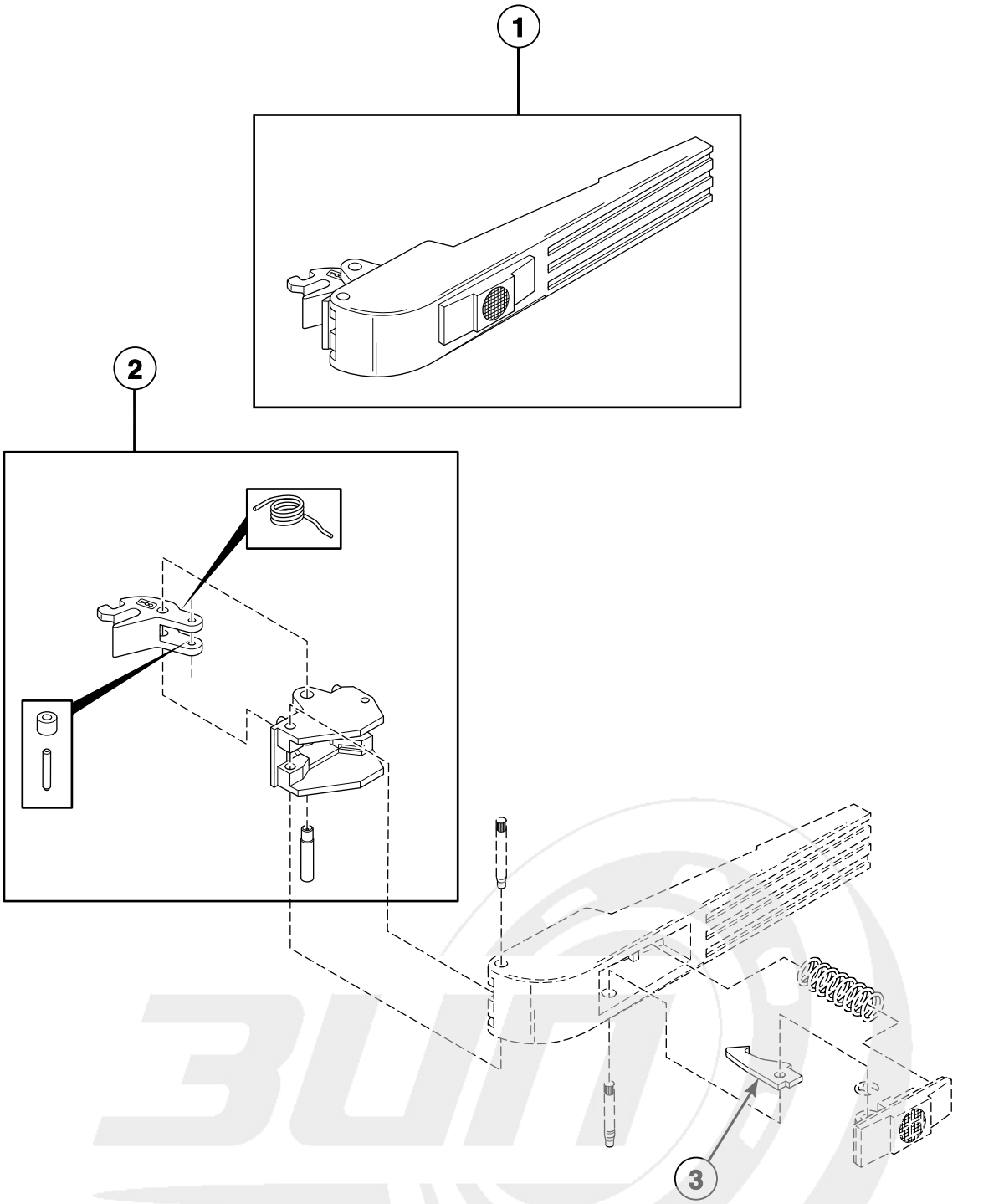


CFD10P_9001005

info@zipnasklade.ru
8(800)500-69-51


© Copyright, Alliance Laundry Systems LLC – DO NOT COPY or TRANSMIT

# Door Handle

| REF | PART NO. | DESCRIPTION | COMMENTS |
|---|---|---|---|
| **1** | 217/00055/00 | Door Handle | |
| **2** | 9001474 | Door Handle Latch | |
| **3** | 9001473 | Door Handle Catch | |

info@zipnasklade.ru
8(800)500-69-51


© Copyright, Alliance Laundry Systems LLC – DO NOT COPY or TRANSMIT

# Control Panel - Models UX055PVXF7, UX55PVXF6 and UX55PVXF7

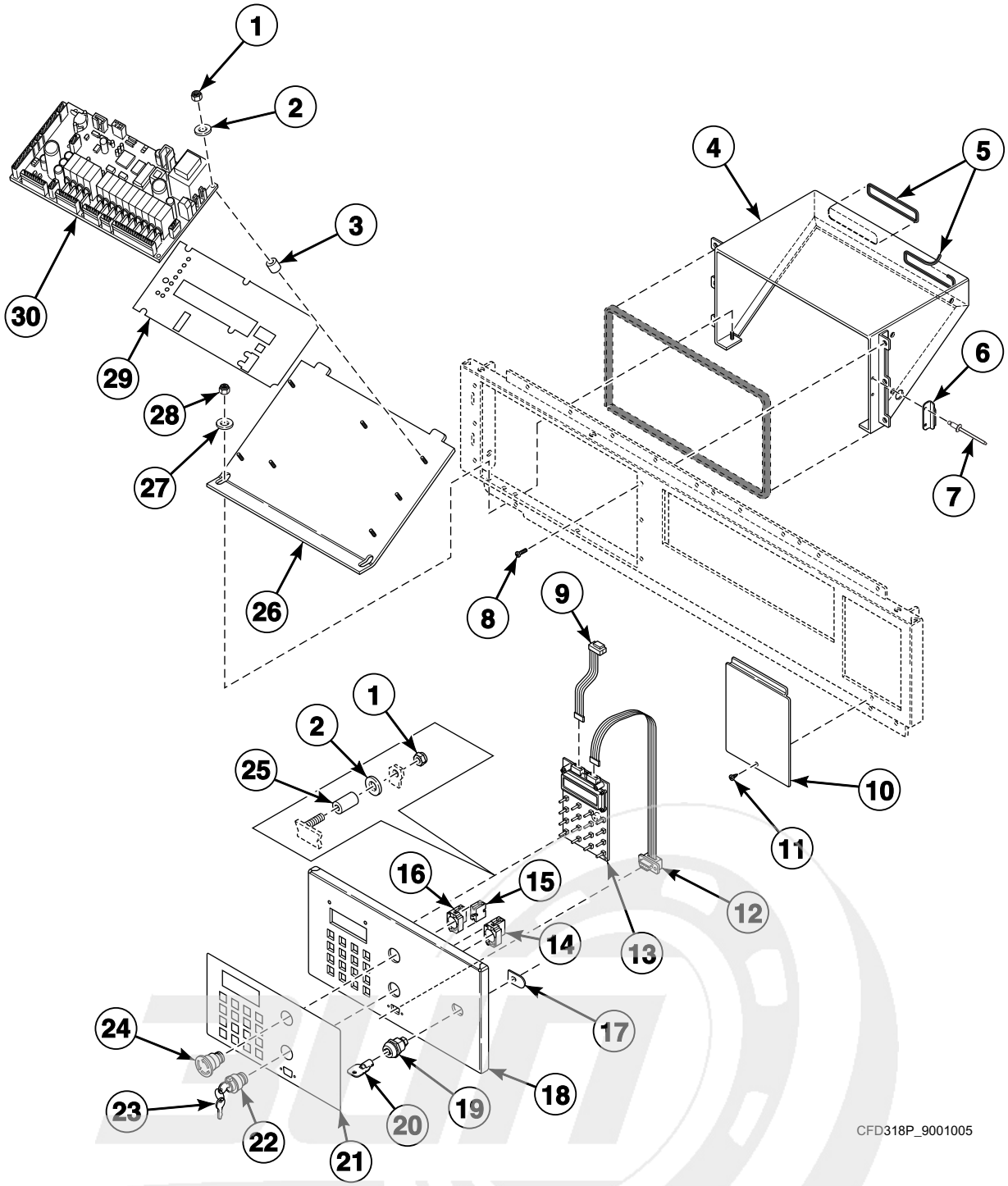


info@zipnasklade.ru
8(800)500-69-51


© Copyright, Alliance Laundry Systems LLC – DO NOT COPY or TRANSMIT

# Control Panel - Models UX055PVXF7, UX55PVXF6 and UX55PVXF7

| REF | PART NO. | DESCRIPTION | COMMENTS |
|---|---|---|---|
| 1 | 9001269 | Nut | |
| 2 | 9001523 | Washer | |
| 3 | 211/00128/00 | Printboard Separator | |
| 4 | F0637819-00 | Control Module Wrap | |
| 5 | 211/00143/00 | Trim | |
| 6 | 111/10310/03 | Latch | |
| 7 | 9001346 | Rivet | |
| 8 | 201415 | Screw | |
| 9 | 9001417 | Flat Cable | |
| 10 | F0637820-00 | Balance Switch Access Cover | |
| 11 | F430956 | Screw | |
| 12 | 9001418 | Programming Cable | |
| 13 | 209/00580/03 | Display | |
| 14 | 9001356 | Switch Base | |
| 15 | 44018901 | Contact Block | |
| 16 | 44018701 | Contact Block | |
| 17 | F606295 | Lock Latch | |
| 18 | F0637813-00 | Control Module Face | |
| 19 | F190802P | Lid Lock | |
| 20 | F160562 | Key | |
| 21 | 9001561 | Overlay | |
| 22 | 9001378 | Programming Key Contact Switch | |
| 23 | 9001756 | Programming Key | |
| 24 | 44018801 | Pushbutton | |
| 25 | 211/00140/00 | Spacer | |
| 26 | F0637821-00 | Control Module Bottom Assembly | |
| 27 | F431017 | Nut | |
| 28 | F431123 | Washer | |
| 29 | 229/00255/00 | Insulating Sticker | |
| 30 | 9002100AR | Main Control | Army cycles |
| | 9002100MA | Main Control | Marine cycles |

info@zipnasklade.ru
8(800)500-69-51


© Copyright, Alliance Laundry Systems LLC – DO NOT COPY or TRANSMIT

# Control Panel - All Models Except UX055PVXF7, UX55PVXF6 and UX55PVXF7

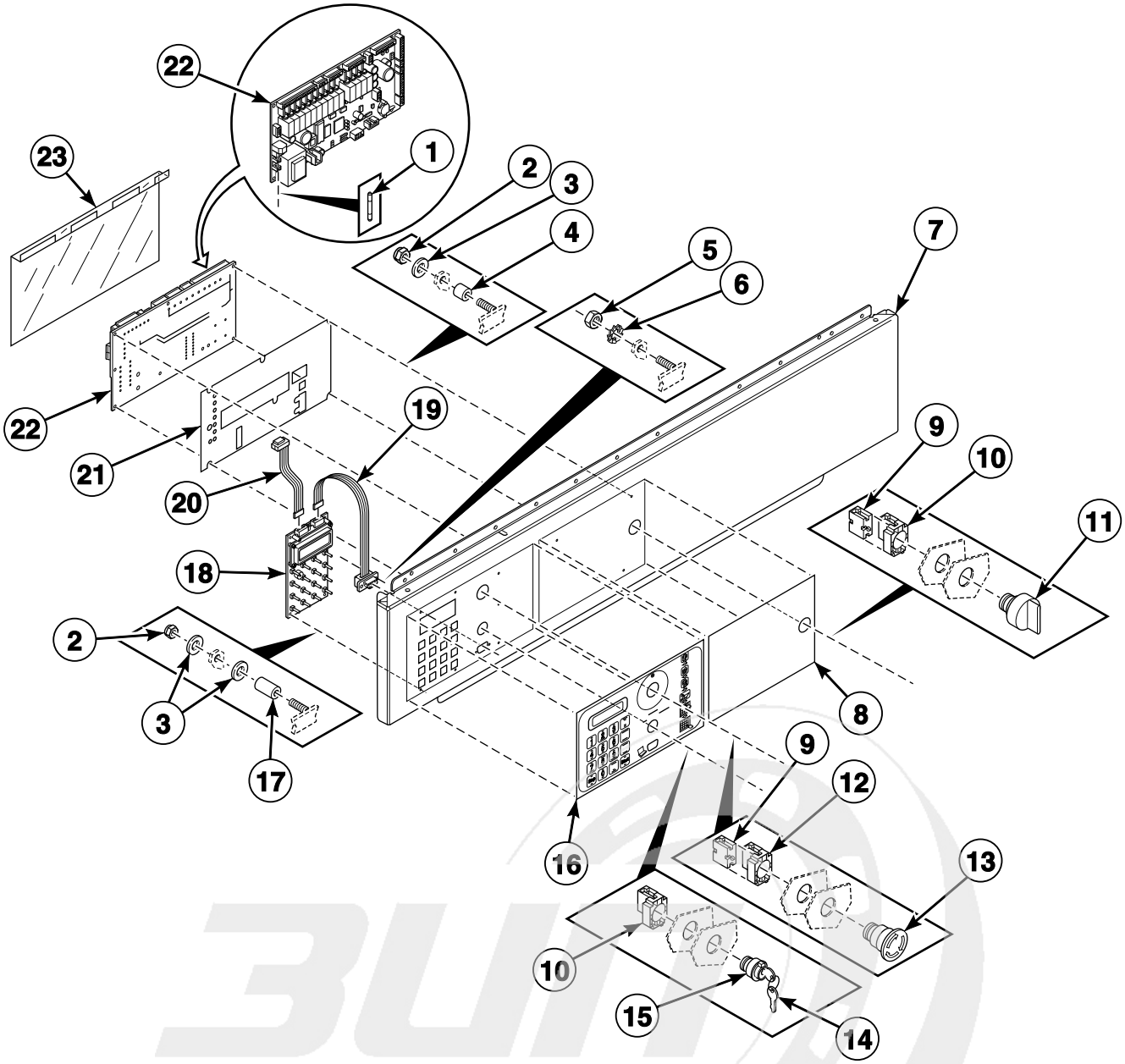


info@zipnasklade.ru
8(800)500-69-51


© Copyright, Alliance Laundry Systems LLC – DO NOT COPY or TRANSMIT

# Control Panel - All Models Except UX055PVXF7, UX55PVXF6 and UX55PVXF7

| REF | PART NO. | DESCRIPTION | COMMENTS |
|---|---|---|---|
| 1 | 9001379 | Fuse | |
| 2 | 9001269 | Nut | |
| 3 | 9001523 | Washer | |
| 4 | 9001425 | Spacer | |
| 5 | 9001253 | Nut | |
| 6 | 9001244 | Washer | |
| 7 | 9001089 | Control Panel | 55 pound models |
| | 9001068 | Control Panel | 75 pound models |
| 8 | F8435601 | Overlay | UX models |
| | 9001563 | Overlay | SX models |
| | 9001890 | Logo Decal | HX models |
| 9 | 44018901 | Contact Block | |
| 10 | 9001356 | Switch Base | |
| 11 | 9002072 | Switch Knob | Steam and electric heat |
| 12 | 44018701 | Contact Block | |
| 13 | 44018801 | Pushbutton | |
| 14 | 9001756 | Programming Key | Key code 455 |
| 15 | 9001378 | Programming Key Contact Switch | |
| 16 | 9001561 | Overlay | |
| 17 | 9001659 | Spacer | |
| 18 | 209/00580/03 | Display | |
| 19 | 9001418 | Programming Cable | |
| 20 | 9001417 | Flat Cable | |
| 21 | 229/00255/00 | Insulating Sticker | |
| 22 | 9002100 | Main Control | |
| | 210/01304/07 | Soap Harness | Main control to soap board |
| 23 | 229/00289/00 | Circuit Board Cover | |

info@zipnasklade.ru
8(800)500-69-51


© Copyright, Alliance Laundry Systems LLC – DO NOT COPY or TRANSMIT

# Control Module Through February 2006 - 55 Pound Models

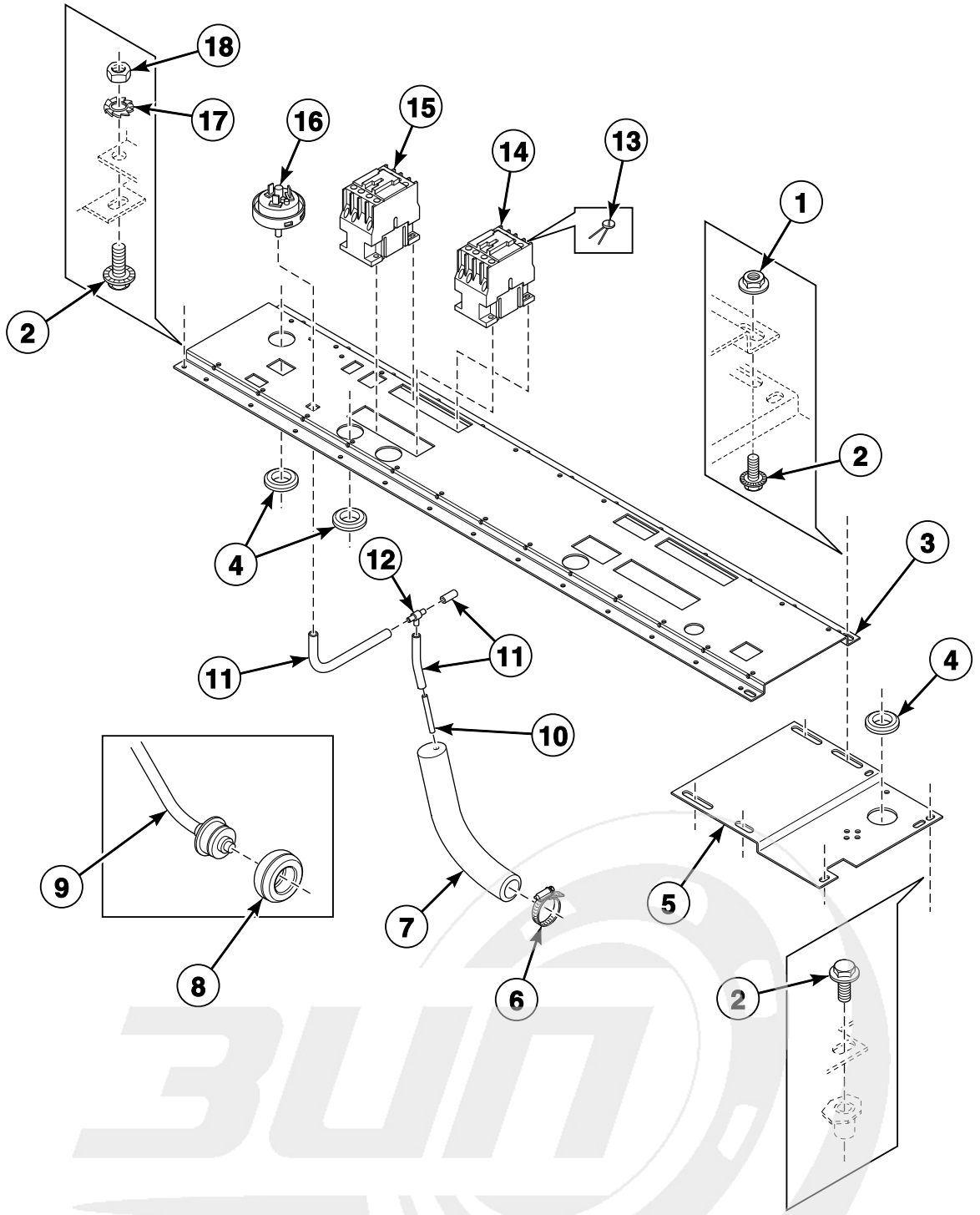


info@zipnasklade.ru
8(800)500-69-51


© Copyright, Alliance Laundry Systems LLC – DO NOT COPY or TRANSMIT

# Control Module Through February 2006 - 55 Pound Models

| REF | PART NO. | DESCRIPTION | COMMENTS |
|---|---|---|---|
| 1 | 9001311 | Nut | |
| 2 | 9001310 | Bolt | |
| 3 | 9001053 | Electrical Component Plate | |
| 4 | 9001539 | Grommet | |
| 5 | 9001144 | Electrical Component Extension Plate | |
| 6 | 9001492 | Hose Clamp | |
| 7 | 9001542 | Pressure Switch Elbow | |
| 8 | 9001564 | Thermostat Seal | |
| 9 | 210/01064/16 | Thermostat | |
| 10 | 9001496 | Hose Barb | |
| 11 | 223/00333/00 | Pressure Hose | |
| 12 | 223/00173/10 | Pressure Switch Hose Tee | |
| 13 | 9001746 | Noise Suppressor | |
| 14 | 9002066 | Contactor | Heating |
| 15 | 9001352 | Contactor | |
| 16 | 9001351 | Pressure Switch | |
| 17 | 9001241 | Washer | |
| 18 | 9001250 | Nut | |

info@zipnasklade.ru
8(800)500-69-51


© Copyright, Alliance Laundry Systems LLC – DO NOT COPY or TRANSMIT

# Control Module Through February 2006 - 75 Pound Models

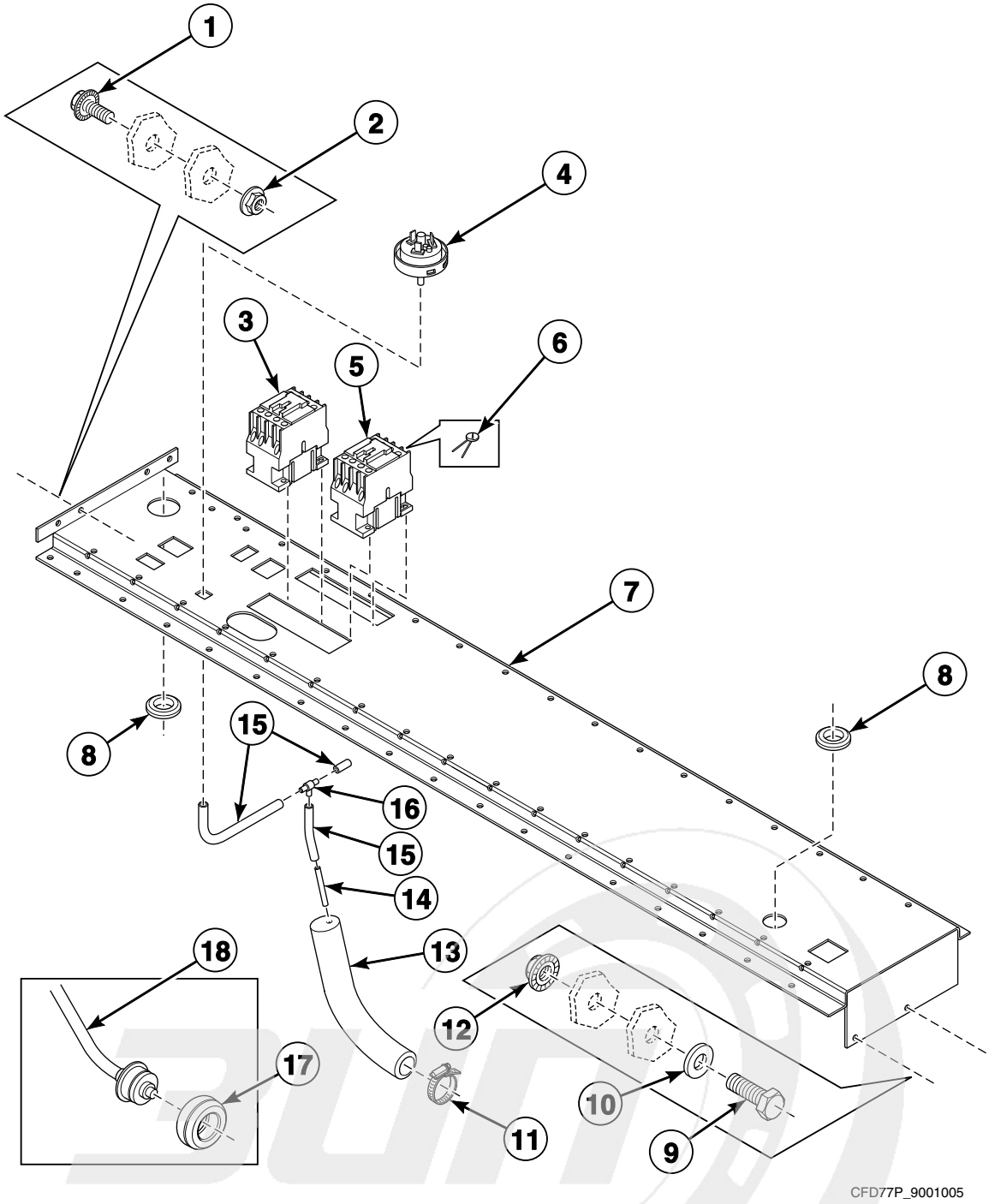


info@zipnasklade.ru
8(800)500-69-51


© Copyright, Alliance Laundry Systems LLC – DO NOT COPY or TRANSMIT

# Control Module Through February 2006 - 75 Pound Models

| REF | PART NO. | DESCRIPTION | COMMENTS |
|---|---|---|---|
| 1 | 9001310 | Bolt | |
| 2 | 9001311 | Nut | |
| 3 | 9001352 | Contactor | |
| 4 | 9001351 | Pressure Switch | |
| 5 | 9002066 | Contactor | Heating |
| 6 | 9001746 | Noise Suppressor | |
| 7 | 9001057 | Electrical Components Plate | |
| 8 | 9001539 | Grommet | |
| 9 | 9001277 | Bolt | |
| 10 | 9001230 | Washer | |
| 11 | 9001492 | Hose Clamp | |
| 12 | 9001146 | Electrical Components Plate | |
| 13 | 9001542 | Pressure Switch Elbow | |
| 14 | 9001496 | Hose Barb | |
| 15 | 223/00333/00 | Pressure Hose | |
| 16 | 223/00173/10 | Pressure Switch Hose Tee | |
| 17 | 9001564 | Thermostat Seal | |
| 18 | 9001669 | Thermostat | |

info@zipnasklade.ru
8(800)500-69-51


© Copyright, Alliance Laundry Systems LLC – DO NOT COPY or TRANSMIT

# Control Module Starting March 2006

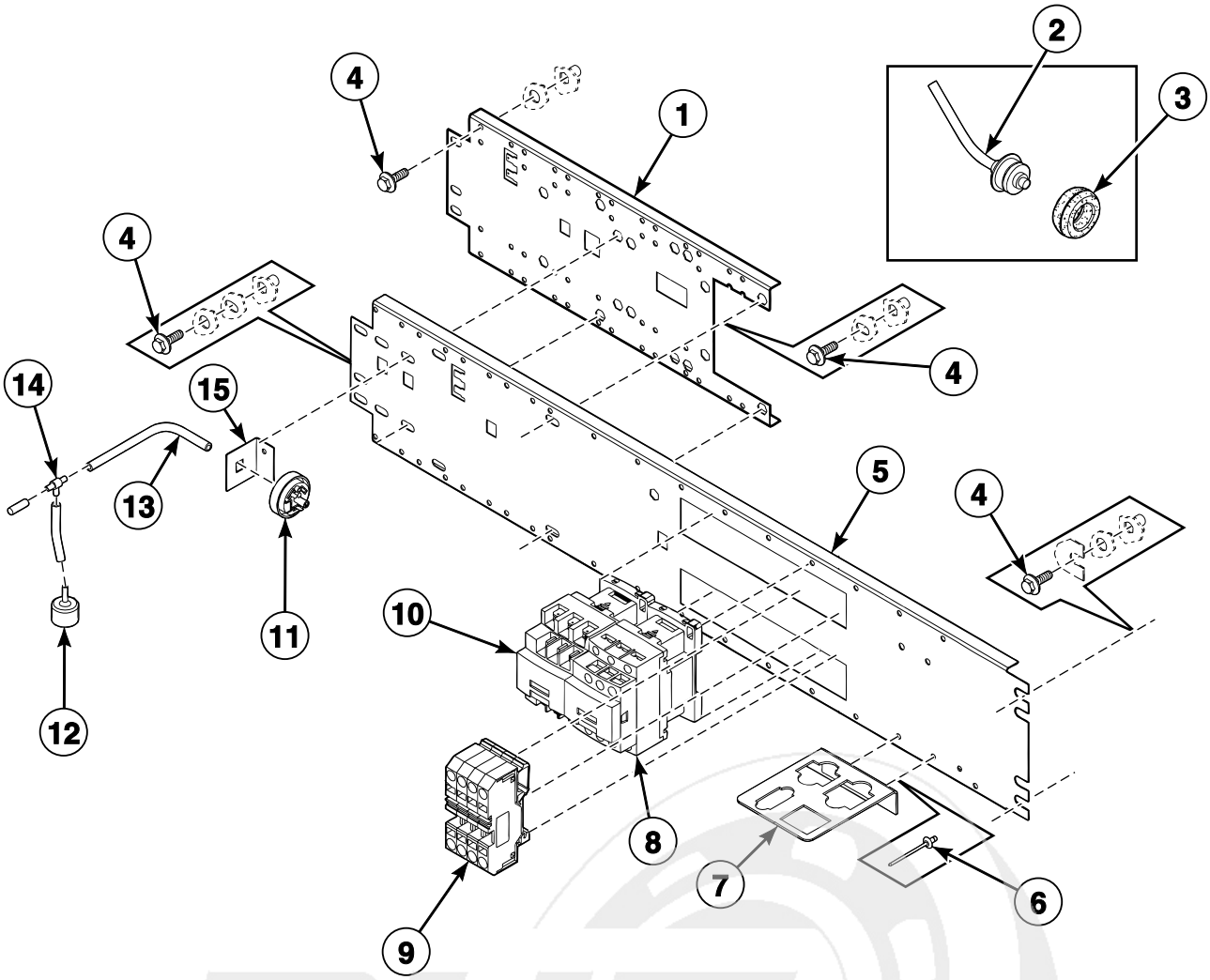


CFD198P_9001005

info@zipnasklade.ru
8(800)500-69-51


© Copyright, Alliance Laundry Systems LLC – DO NOT COPY or TRANSMIT

# Control Module Starting March 2006

| REF | PART NO. | DESCRIPTION | COMMENTS |
|---|---|---|---|
| 1 | 9001958 | Electrical Component Mounting Plate | |
| 2 | 9001669 | Thermostat | |
| 3 | 9001564 | Thermostat Seal | |
| 4 | 9001310 | Bolt | |
| 5 | 9002081 | Electrical Components Plate | Includes item 7 |
| 6 | 9002087 | Screw | |
| 7 | 9001960 | Support Connector | |
| 8 | 9002066 | Contactor | Heating |
| 9 | 9002021 | Overload Contactor | 2006-1201 |
| | 9002022 | Overload Contactor | 2006-1204 |
| | 9002023 | Overload Contactor | 2006-1304 |
| | 9002024 | Overload Contactor | 2006-1301 |
| | 9002025 | Overload Contactor | 2010-1201 |
| | 9002026 | Overload Contactor | 2010-1204 |
| | 9002027 | Overload Contactor | 2010-1301 |
| 10 | 9001352 | Contactor | Heating |
| 11 | 9001351 | Pressure Switch | Models through 7/8/08 |
| | 209/00029/00 | Water Level Switch | Models starting 7/9/08 |
| 12 | 9001932 | Pressure Switch Cap | |
| 13 | 223/00333/00 | Pressure Hose | |
| 14 | 223/00173/10 | Pressure Switch Hose Tee | |
| 15 | 9002082 | Electrical Components Plate | |

info@zipnasklade.ru
8(800)500-69-51


© Copyright, Alliance Laundry Systems LLC – DO NOT COPY or TRANSMIT

# Front, Left Side and Upper Back Panels - 55 Pound Models Except Models UX055PVXF7, UX55PVXF6 and UX55PVXF7

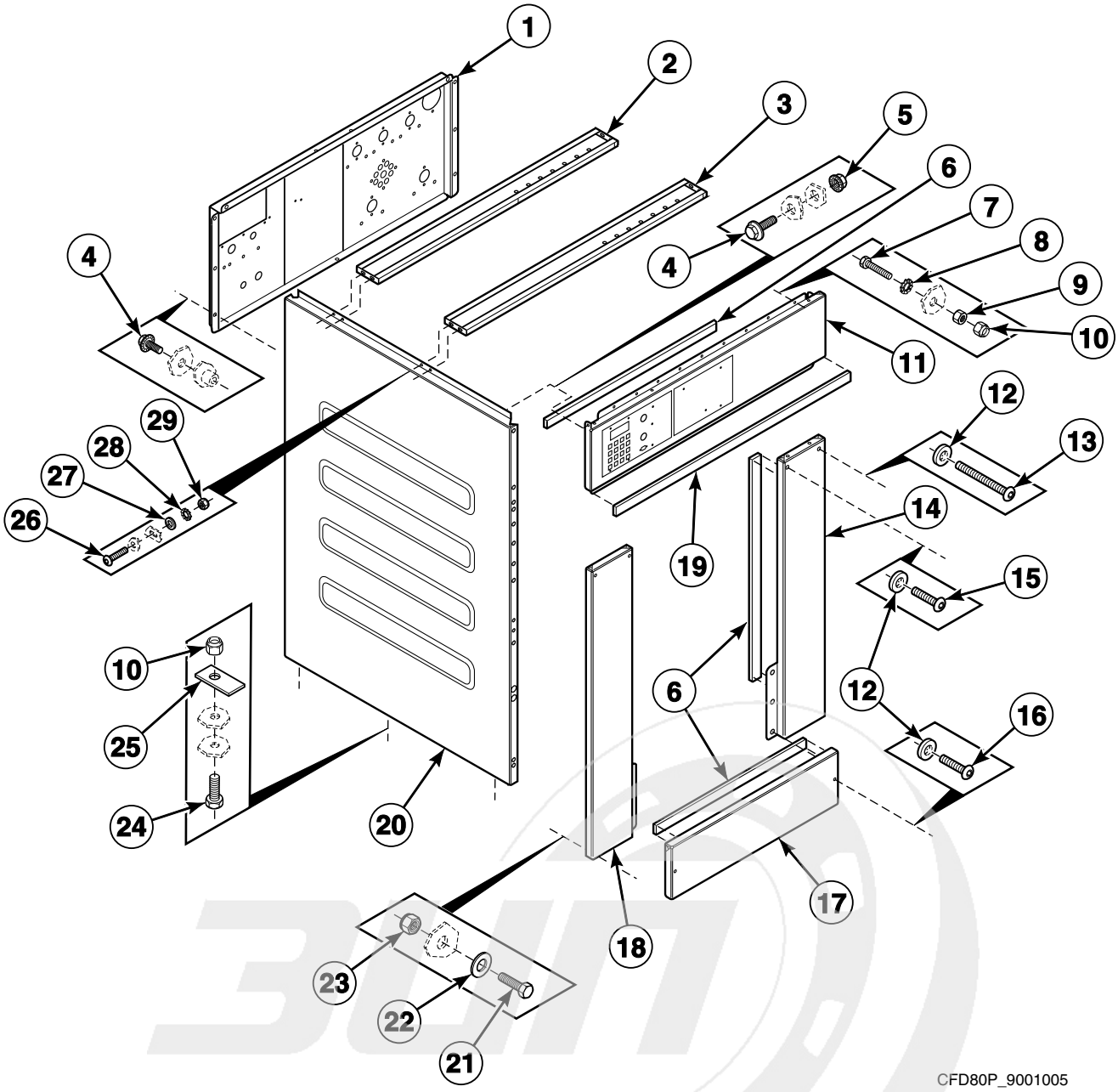


info@zipnasklade.ru
8(800)500-69-51


© Copyright, Alliance Laundry Systems LLC – DO NOT COPY or TRANSMIT

# Front, Left Side and Upper Back Panels - 55 Pound Models Except Models UX055PVXF7, UX55PVXF6 and UX55PVXF7

| REF | PART NO. | DESCRIPTION | COMMENTS |
|---|---|---|---|
| 1 | 9001062 | Backbridge | |
| 2 | 9001076 | Dispenser Rear Mounting Plate | |
| 3 | 9001075 | Dispenser Front Mounting Plate | |
| 4 | 9001310 | Bolt | |
| 5 | 9001311 | Nut | |
| 6 | 9001608 | Gasket | |
| 7 | 9001273 | Bolt | |
| 8 | 9001241 | Washer | |
| 9 | 9001260 | Nut | |
| 10 | 9001254 | Nut | |
| 11 | 9001089 | Control Panel | |
| 12 | 9001236 | Washer | |
| 13 | 9001661 | Screw | |
| 14 | 9001671 | Right Front Panel | |
| 15 | 9001670 | Screw | |
| 16 | 9001332 | Screw | |
| 17 | 9001090 | Kickplate | |
| 18 | 9001672 | Left Front Panel | |
| 19 | F0637762-00 | Finger Guard Extension Assembly | |
| 20 | 9001142 | Side Panel | |
| 21 | 9001296 | Bolt | |
| 22 | 9001216 | Washer | |
| 23 | 9001262 | Nut | |
| 24 | 9001275 | Bolt | |
| 25 | 9001037 | Outlet Pipe Plate Assembly | |
| 26 | 9001330 | Screw | |
| 27 | 9001229 | Washer | |
| 28 | 9001243 | Washer | |
| 29 | 9001252 | Nut | |

info@zipnasklade.ru
8(800)500-69-51


© Copyright, Alliance Laundry Systems LLC – DO NOT COPY or TRANSMIT

# Front, Left Side and Upper Back Panels - Models UX055PVXF7, UX55PVXF6 and UX55PVXF7

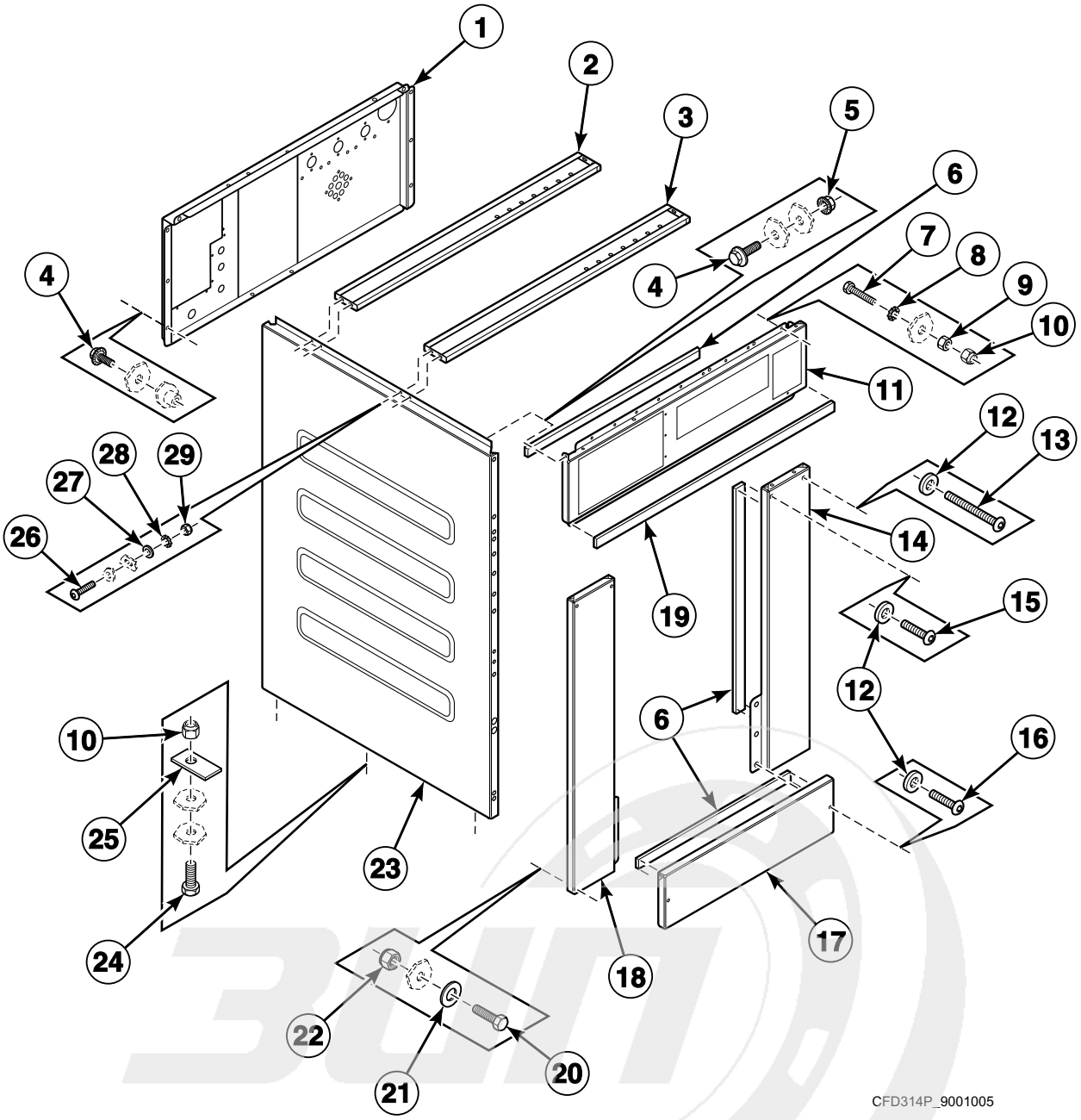


info@zipnasklade.ru
8(800)500-69-51


© Copyright, Alliance Laundry Systems LLC – DO NOT COPY or TRANSMIT

# Front, Left Side and Upper Back Panels - Models UX055PVXF7, UX55PVXF6 and UX55PVXF7

| REF | PART NO. | DESCRIPTION | COMMENTS |
|---|---|---|---|
| 1 | 111/10303/00 | Backbridge | |
| 2 | 9001076 | Dispenser Rear Mounting Plate | |
| 3 | 9001075 | Dispenser Front Mounting Plate | |
| 4 | 9001310 | Bolt | |
| 5 | 9001311 | Nut | |
| 6 | 9001608 | Gasket | |
| 7 | 9001273 | Bolt | |
| 8 | 9001241 | Washer | |
| 9 | 9001260 | Nut | |
| 10 | 9001254 | Nut | |
| 11 | 111/10302/00 | Control Panel | |
| 12 | 9001236 | Washer | |
| 13 | 9001661 | Screw | |
| 14 | 9001671 | Right Front Panel | |
| 15 | 9001670 | Screw | |
| 16 | 9001332 | Screw | |
| 17 | 9001090 | Kickplate | |
| 18 | 9001672 | Left Front Panel | |
| 19 | F0637762-00 | Finger Guard Extension Assembly | |
| 20 | 9001296 | Bolt | |
| 21 | 9001216 | Washer | |
| 22 | 9001262 | Nut | |
| 23 | 9001142 | Side Panel | |
| 24 | 9001275 | Bolt | |
| 25 | 9001037 | Outlet Pipe Plate Assembly | |
| 26 | 9001330 | Screw | |
| 27 | 9001229 | Washer | |
| 28 | 9001243 | Washer | |
| 29 | 9001252 | Nut | |

info@zipnasklade.ru
8(800)500-69-51


© Copyright, Alliance Laundry Systems LLC – DO NOT COPY or TRANSMIT

# Front, Left Side and Upper Back Panels - 75 Pound Models Through 9/30/08

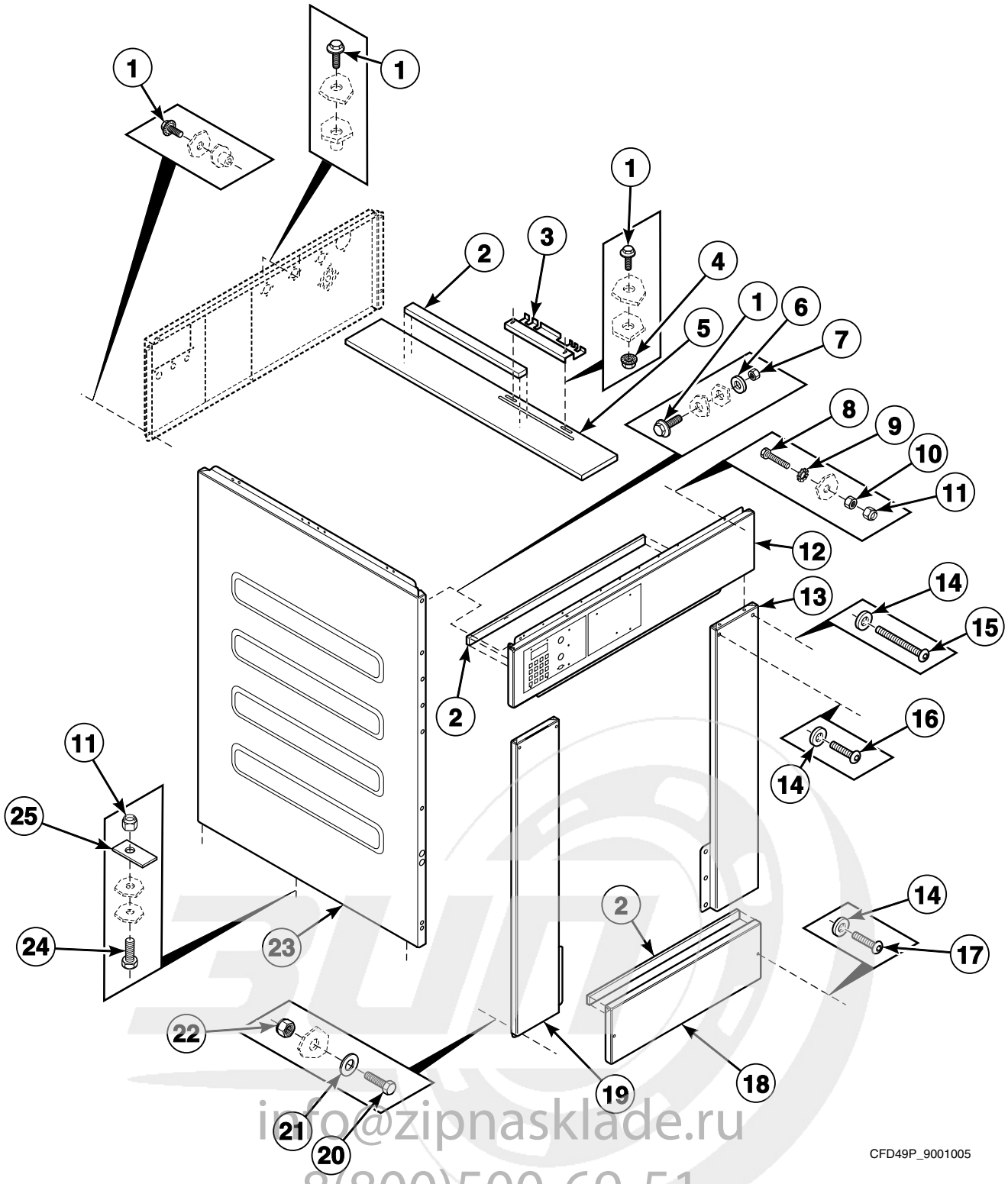


info@zipnasklade.ru
8(800)500-69-51


© Copyright, Alliance Laundry Systems LLC – DO NOT COPY or TRANSMIT

# Front, Left Side and Upper Back Panels - 75 Pound Models Through 9/30/08

| REF | PART NO. | DESCRIPTION | COMMENTS |
|---|---|---|---|
| 1 | 9001310 | Bolt | |
| 2 | 9001608 | Gasket | |
| 3 | 9001044 | Soap Box Support Plate | |
| 4 | 9001311 | Nut | |
| 5 | 9001054 | Dispenser Mounting Plate | |
| 6 | 9001213 | Washer | |
| 7 | 9001250 | Nut | |
| 8 | 9001273 | Bolt | |
| 9 | 9001241 | Washer | |
| 10 | 9001260 | Nut | |
| 11 | 9001254 | Nut | |
| 12 | 9001068 | Control Panel | |
| 13 | 9001676 | Right Front Panel | |
| 14 | 9001236 | Washer | |
| 15 | 9001661 | Screw | |
| 16 | 9001670 | Screw | |
| 17 | 9001332 | Screw | |
| 18 | 9001090 | Kickplate | |
| 19 | 9001677 | Left Front Panel | |
| 20 | 9001296 | Bolt | |
| 21 | 9001216 | Washer | |
| 22 | 9001262 | Nut | |
| 23 | 9001135 | Side Panel | |
| 24 | 9001275 | Bolt | |
| 25 | 9001037 | Outlet Pipe Plate Assembly | |

info@zipnasklade.ru
8(800)500-69-51


© Copyright, Alliance Laundry Systems LLC – DO NOT COPY or TRANSMIT

# Front, Left Side and Upper Back Panels - 75 Pound
# Models Starting 10/1/08 Through 11/13/11

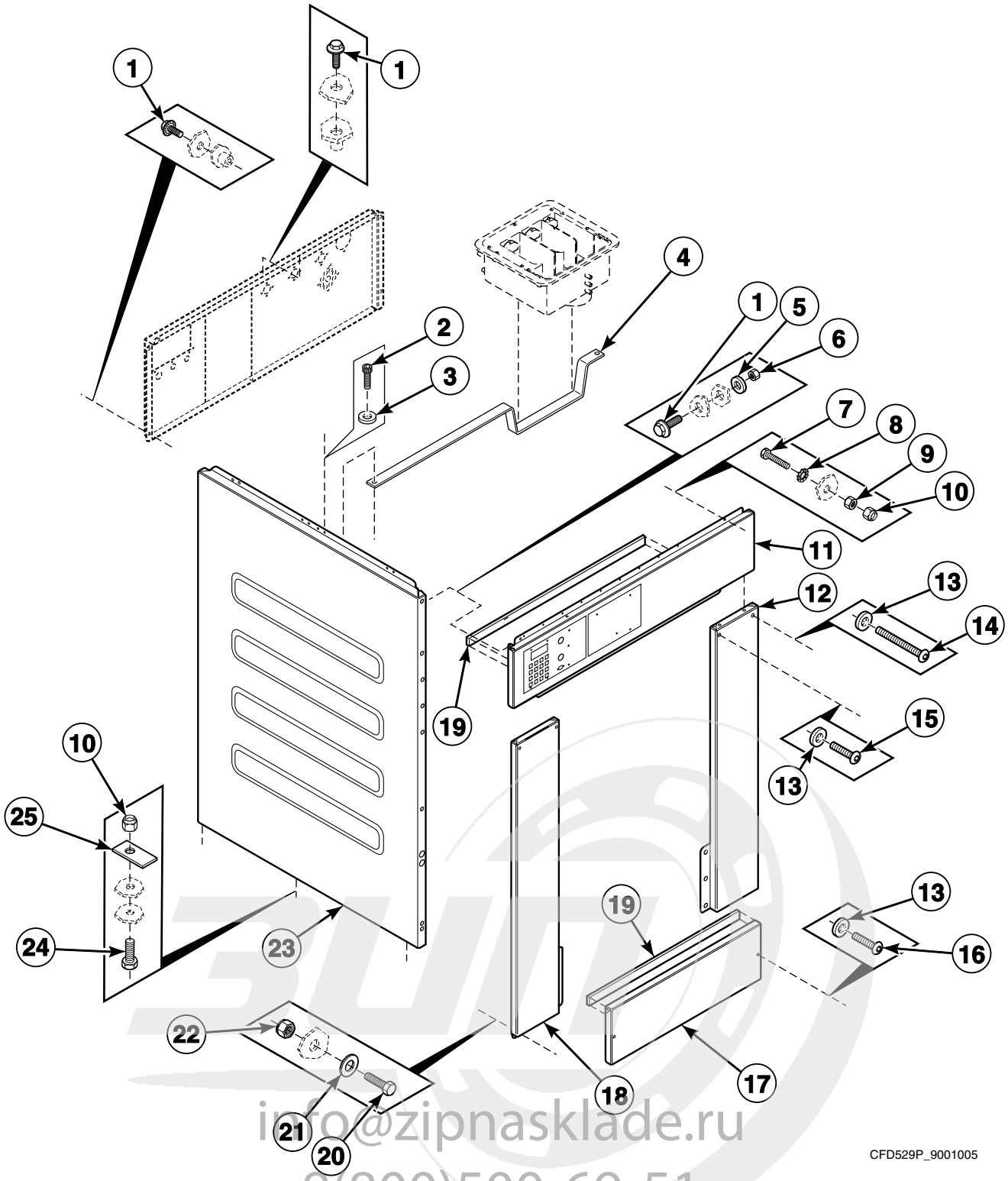


info@zipnasklade.ru
8(800)500-69-51


© Copyright, Alliance Laundry Systems LLC – DO NOT COPY or TRANSMIT

# Front, Left Side and Upper Back Panels - 75 Pound
# Models Starting 10/1/08 Through 11/13/11

| REF | PART NO. | DESCRIPTION | COMMENTS |
|---|---|---|---|
| 1 | 9001310 | Bolt | |
| 2 | 206/00166/00 | Screw | |
| 3 | B12421401 | Washer | |
| 4 | 111/00207/11 | Support Bracket | |
| 5 | 9001213 | Washer | |
| 6 | 9001250 | Nut | |
| 7 | 9001273 | Bolt | |
| 8 | 9001241 | Washer | |
| 9 | 9001260 | Nut | |
| 10 | 9001254 | Nut | |
| 11 | 9001068 | Control Panel | |
| 12 | 9001676 | Right Front Panel | |
| 13 | 9001236 | Washer | |
| 14 | 9001661 | Screw | |
| 15 | 9001670 | Screw | |
| 16 | 9001332 | Screw | |
| 17 | 9001090 | Kickplate | |
| 18 | 9001677 | Left Front Panel | |
| 19 | 9001608 | Gasket | |
| 20 | 9001296 | Bolt | |
| 21 | 9001216 | Washer | |
| 22 | 9001262 | Nut | |
| 23 | 9001135 | Side Panel | |
| 24 | 9001275 | Bolt | |
| 25 | 9001037 | Outlet Pipe Plate Assembly | |

info@zipnasklade.ru
8(800)500-69-51


© Copyright, Alliance Laundry Systems LLC – DO NOT COPY or TRANSMIT

# Front, Left Side and Upper Back Panels - 75 Pound
# Models Starting 11/14/11

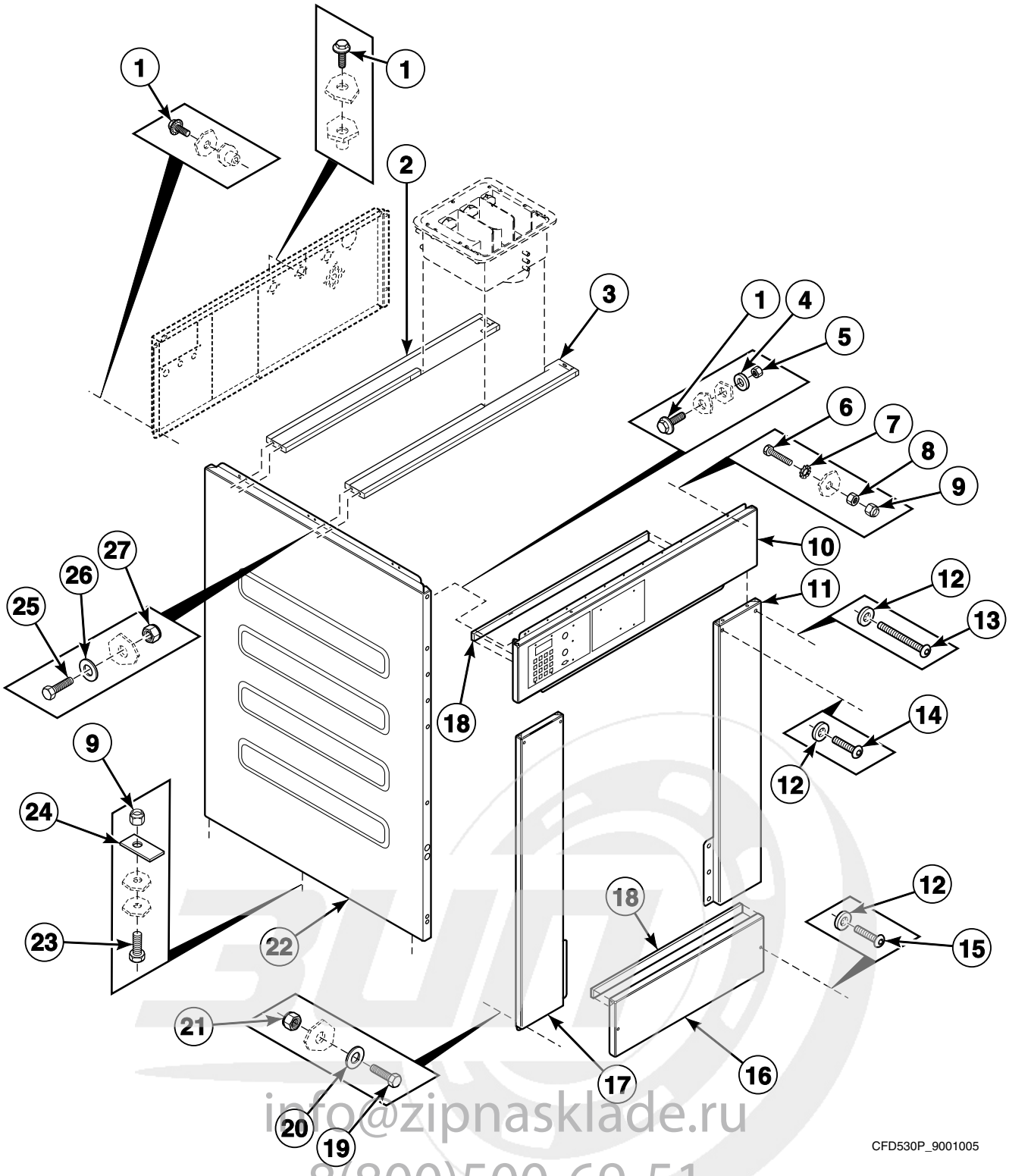


info@zipnasklade.ru
8(800)500-69-51


© Copyright, Alliance Laundry Systems LLC – DO NOT COPY or TRANSMIT

# Front, Left Side and Upper Back Panels - 75 Pound Models Starting 11/14/11

| REF | PART NO. | DESCRIPTION | COMMENTS |
|---|---|---|---|
| 1 | 9001310 | Bolt | |
| 2 | B12456101 | Support Bracket | Rear |
| 3 | B12456201 | Support Bracket | Front |
| 4 | 9001213 | Washer | |
| 5 | 9001250 | Nut | |
| 6 | 9001273 | Bolt | |
| 7 | 9001241 | Washer | |
| 8 | 9001260 | Nut | |
| 9 | 9001254 | Nut | |
| 10 | 9001068 | Control Panel | |
| 11 | 9001676 | Right Front Panel | |
| 12 | 9001236 | Washer | |
| 13 | 9001661 | Screw | |
| 14 | 9001670 | Screw | |
| 15 | 9001332 | Screw | |
| 16 | 9001090 | Kickplate | |
| 17 | 9001677 | Left Front Panel | |
| 18 | 9001608 | Gasket | |
| 19 | 9001296 | Bolt | |
| 20 | 9001216 | Washer | |
| 21 | 9001262 | Nut | |
| 22 | 9001135 | Side Panel | |
| 23 | 9001275 | Bolt | |
| 24 | 9001037 | Outlet Pipe Plate Assembly | |
| 25 | 9001292 | Bolt | |
| 26 | 9001229 | Washer | |
| 27 | 9001267 | Nut | |

info@zipnasklade.ru
8(800)500-69-51


© Copyright, Alliance Laundry Systems LLC – DO NOT COPY or TRANSMIT

# Top, Right Side and Lower Back Panels - Models UX055PVXF7, UX55PVXF6 and UX55PVXF7

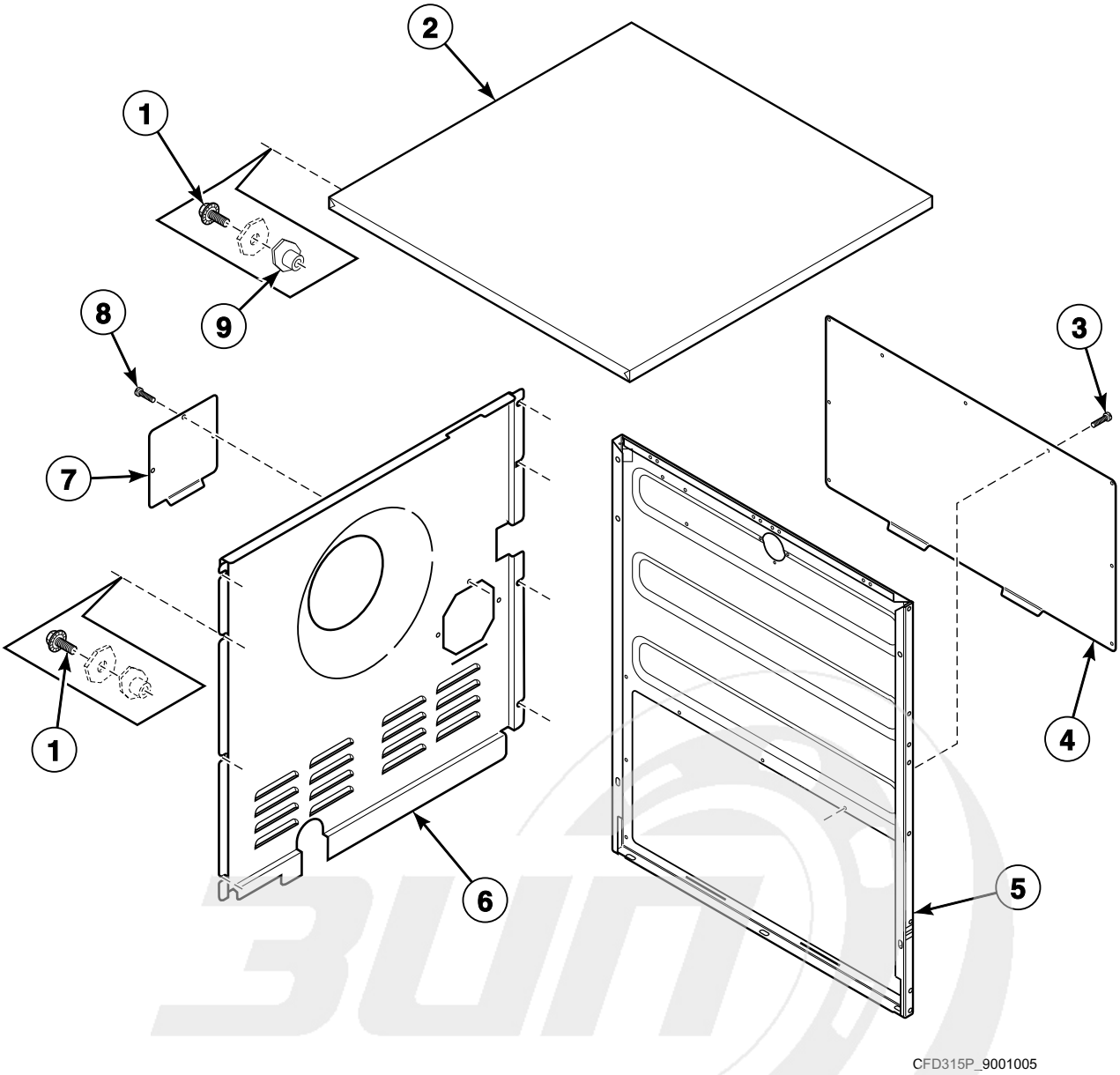


info@zipnasklade.ru
8(800)500-69-51


© Copyright, Alliance Laundry Systems LLC – DO NOT COPY or TRANSMIT

# Top, Right Side and Lower Back Panels - Models UX055PVXF7, UX55PVXF6 and UX55PVXF7

| REF | PART NO. | DESCRIPTION | COMMENTS |
|---|---|---|---|
| 1 | 9001310 | Bolt | |
| 2 | 111/10304/00 | Top Panel | |
| 3 | 206/00104/00 | Screw | |
| 4 | 111/10316/00 | Side Panel Cover | |
| 5 | 111/10301/00 | Right Side Panel | |
| 6 | 111/10308/00 | Rear Panel | |
| 7 | 111/10315/00 | Cover | |
| 8 | 206/00099/00 | Bolt | |

info@zipnasklade.ru
8(800)500-69-51


© Copyright, Alliance Laundry Systems LLC – DO NOT COPY or TRANSMIT

# Top, Right Side and Lower Back Panels - All Models Except UX055PVXF7, UX55PVXF6 and UX55PVXF7

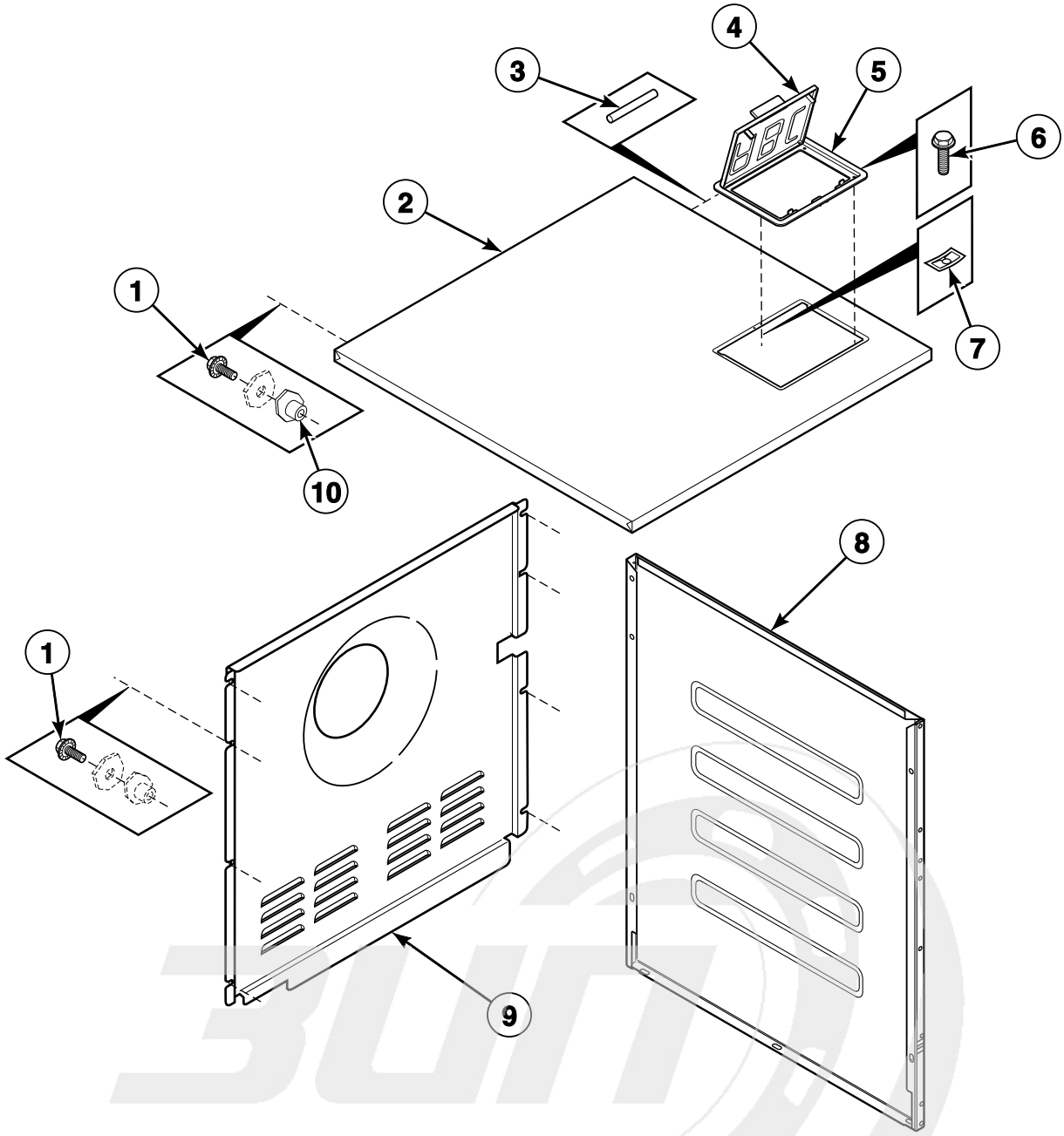


CFD40P_9001005

info@zipnasklade.ru
8(800)500-69-51


© Copyright, Alliance Laundry Systems LLC – DO NOT COPY or TRANSMIT

# Top, Right Side and Lower Back Panels - All Models Except UX055PVXF7, UX55PVXF6 and UX55PVXF7

| REF | PART NO. | DESCRIPTION | COMMENTS |
|---|---|---|---|
| **1** | 9001310 | Bolt | |
| **2** | 9001145 | Top Panel | 55 pound models |
| | 9001067 | Top Panel | 75 pound models |
| **3** | 9001516 | Soap Dispenser Cover Hinge Rod | 2 required |
| **4** | 9001514 | Soap Dispenser Cover | |
| **5** | 9001515 | Soap Dispenser Frame | |
| **6** | 9001342 | Bolt | |
| **7** | 9001349 | Nut | |
| **8** | 9001142 | Side Panel | 55 pound models |
| | 9001135 | Side Panel | 75 pound models |
| **9** | 9001046 | Rear Panel | 55 pound models |
| | 9001045 | Rear Panel | 75 pound models |
| **10** | 9001271 | Bushing | |

info@zipnasklade.ru
8(800)500-69-51


© Copyright, Alliance Laundry Systems LLC – DO NOT COPY or TRANSMIT

# Fill Plumbing - Models UX055PVXF7, UX55PVXF6 and UX55PVXF7

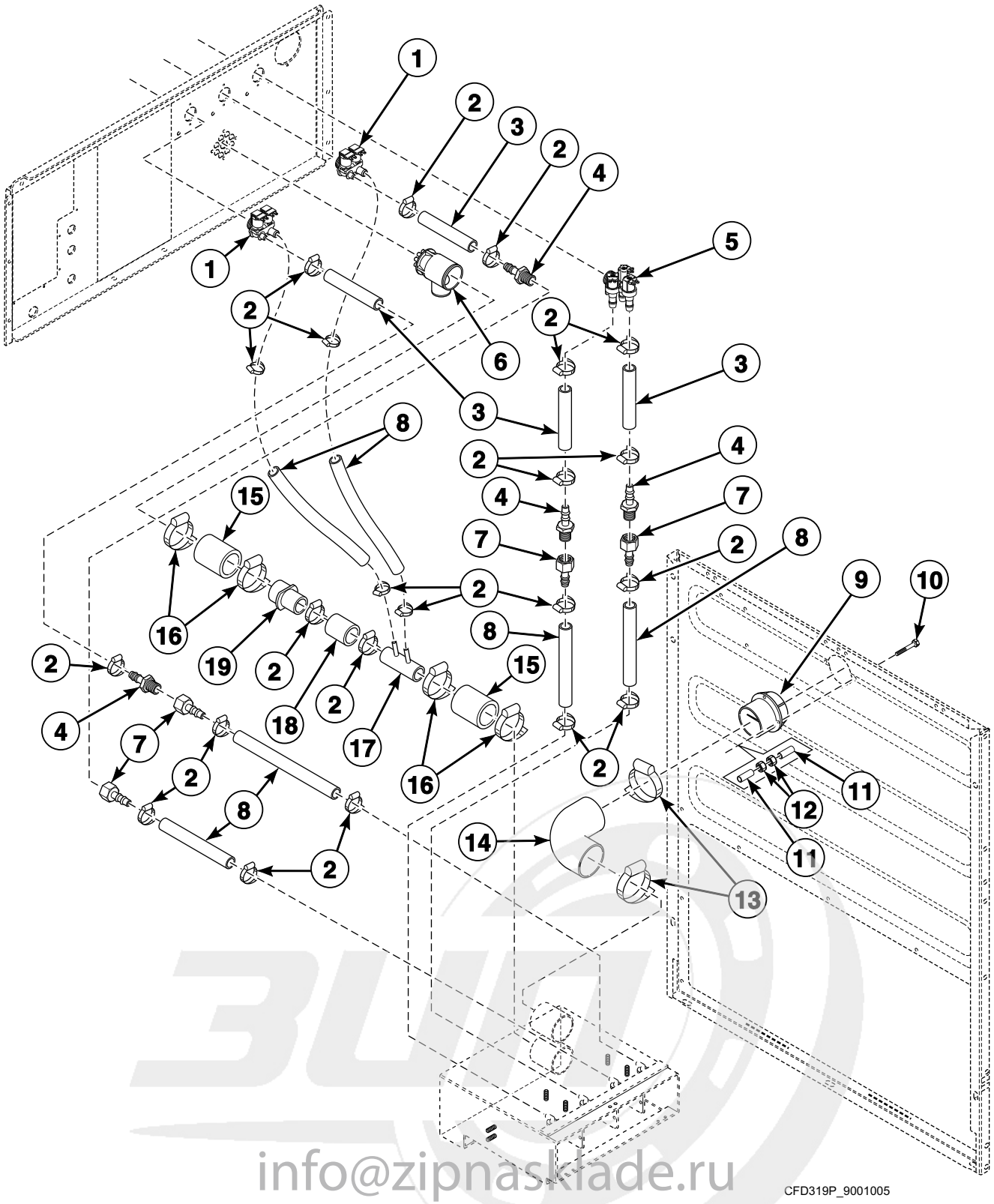


info@zipnasklade.ru
8(800)500-69-51


© Copyright, Alliance Laundry Systems LLC – DO NOT COPY or TRANSMIT

# Fill Plumbing - Models UX055PVXF7, UX55PVXF6 and UX55PVXF7

| REF | PART NO. | DESCRIPTION | COMMENTS |
|---|---|---|---|
| | G582P3 | Diaphragm and Guide Kit | Use with F0381737-00P 3-Way Valve |
| 1 | 9001377 | 2-Way Inlet Valve | Used with F380939 Valve Repair Kit |
| | 223/00367/00 | Flow Restrictor | |
| 2 | 223/00009/00 | Clamp | |
| 3 | 9001498 | Water Hose | |
| 4 | 223/00360/60 | Coupling | |
| 5 | F0381737-00 | 3-Way Valve | |
| | 223/00367/00 | Flow Restrictor | |
| 6 | 9001550 | Liquid Soap Manifold | |
| 7 | 223/00360/50 | Coupling | |
| 8 | 223/00360/00 | Hose | |
| 9 | 9001510 | Hose Vent | |
| 10 | 107/00136/00 | Screw | |
| 11 | 211/00147/00 | Standoff | |
| 12 | 204/00114/00 | Nut | |
| 13 | 9001495 | Hose Clamp | |
| 14 | 223/00359/00 | Hose | |
| 15 | 223/00059/00 | Water Hose | |
| 16 | 223/00010/00 | Hose Clamp | |
| 17 | F0638025-00 | Fill Inlet Tube | |
| 18 | F200107P | Water Hose | |
| 19 | F130315 | Bushing | |

info@zipnasklade.ru
8(800)500-69-51


© Copyright, Alliance Laundry Systems LLC – DO NOT COPY or TRANSMIT

# Fill Plumbing - All Models Except UX055PVXF7, UX55PVXF6 and UX55PVXF7

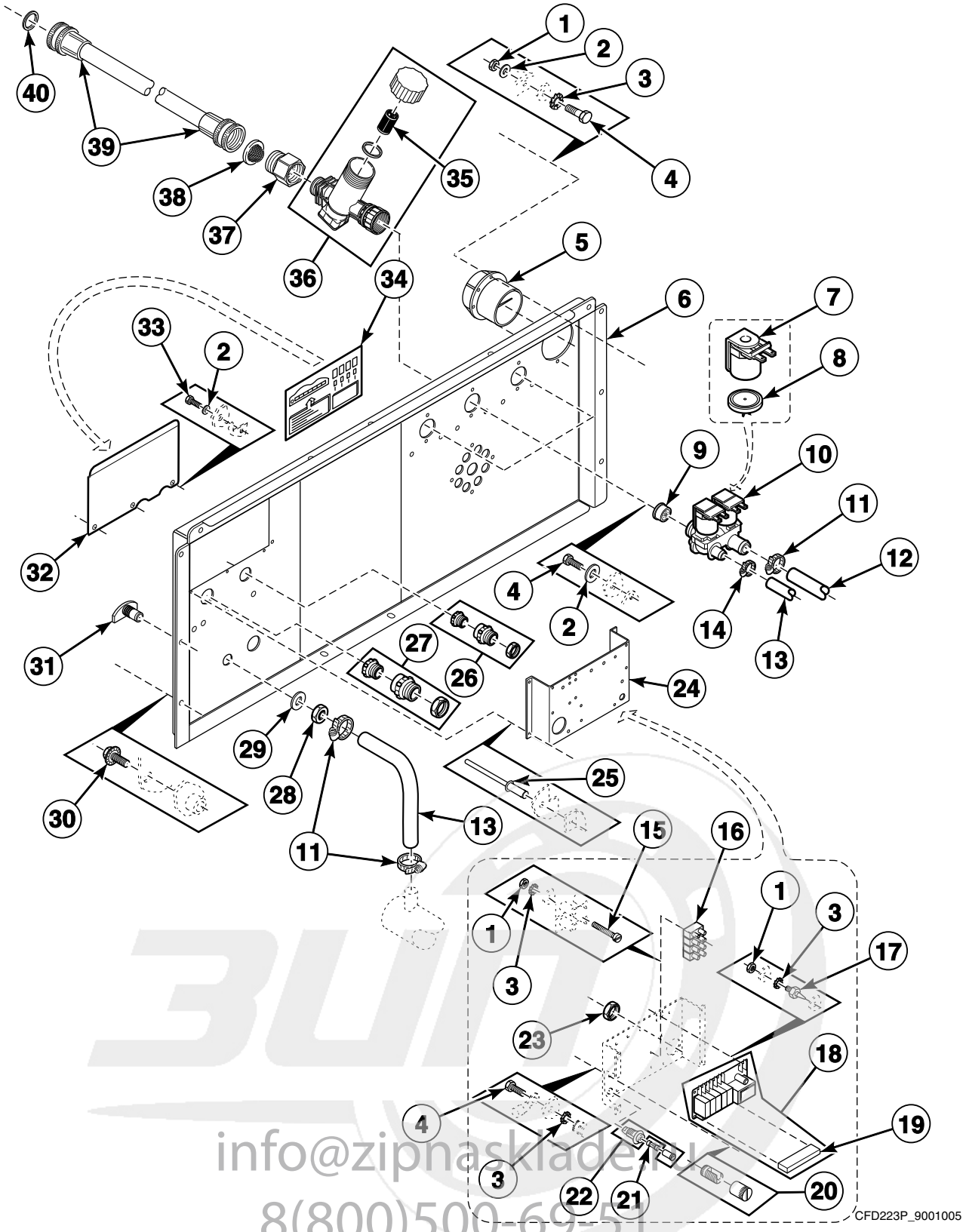


info@zipnaskladem.ru
8(800)500-69-51


© Copyright, Alliance Laundry Systems LLC – DO NOT COPY or TRANSMIT

# Fill Plumbing - All Models Except UX055PVXF7, UX55PVXF6 and UX55PVXF7

| REF | PART NO. | DESCRIPTION | COMMENTS |
|---|---|---|---|
| 1 | 9001252 | Nut | |
| 2 | 9001229 | Washer | |
| 3 | 9001243 | Washer | |
| 4 | 9001292 | Bolt | |
| 5 | 9001510 | Hose Vent | |
| 6 | 9001062 | Backbridge | 55 pound models; Models through Serial No. 0605755252 |
| | N/A | Backbridge | 75 pound models; Models through Serial No. 0605775058 |
| 7 | 9001753 | Inlet Valve Solenoid | |
| 8 | 9001743 | Diaphragm | |
| 9 | F200052400 | Inlet Valve Restrictor | Cold water valve |
| | 223/00390/00 | Flow Restrictor | Hot water valve |
| 10 | 9001377 | 2-Way Inlet Valve | Standard thread; 3 required; Used with F380939 Valve Repair Kit |
| | 209/00316/00 | 2-Way Inlet Valve | Metric thread; 3 required; Used with F380939 Valve Repair Kit |
| 11 | 9001492 | Hose Clamp | |
| 12 | 9001500 | Water Hose | |
| 13 | 9001498 | Water Hose | |
| 14 | F200205 | Hose Clamp | No. 10 |
| 15 | 9001329 | Screw | |
| 16 | 9001354 | Terminal Block | |
| 17 | 9001429 | Standoff | |
| 18 | 9001366 | Soap Injection PCB with Fuse | Includes item 19 |
| 19 | 9001888 | Connector | |
| 20 | 9001350 | Ground Terminal | |
| 21 | 9001384 | Fuse | |
| 22 | 9001364 | Fuse Holder | |
| 23 | 9001539 | Grommet | |
| 24 | 9001040 | Electrical Connection Plate | |
| 25 | 9001346 | Rivet | |
| 26 | 9001431 | Cordlock | PE16 |
| 27 | 9001432 | Cordlock | PG21 |
| 28 | 9001270 | Nut | |
| 29 | 9001209 | Washer | |
| 30 | 9001310 | Bolt | |
| 31 | 9001487 | Prewash and Mainwash Nozzle | |
| 32 | 9001040 | Electrical Connection Plate | |
| 33 | 9001279 | Bolt | |
| 34 | 9001594 | Electrical Connection Sticker | |
| 35 | 209/00385/01 | Filter | |
| 36 | 209/00385/00 | Filter | |
| 37 | 223/00050/01 | Water Valve Adapter | Converts from metric to standard thread |
| 38 | 803615 | Washer | |
| 39 | F200164 | Water Hose | Standard thread |
| | F200166 | Water Hose | Metric thread |
| 40 | 20290 | Washer | |

**N/A = Part no longer available**

info@zipnasklade.ru
8(800)500 69 51


© Copyright, Alliance Laundry Systems LLC – DO NOT COPY or TRANSMIT

# Upper Back Panel - 55 Pound Models

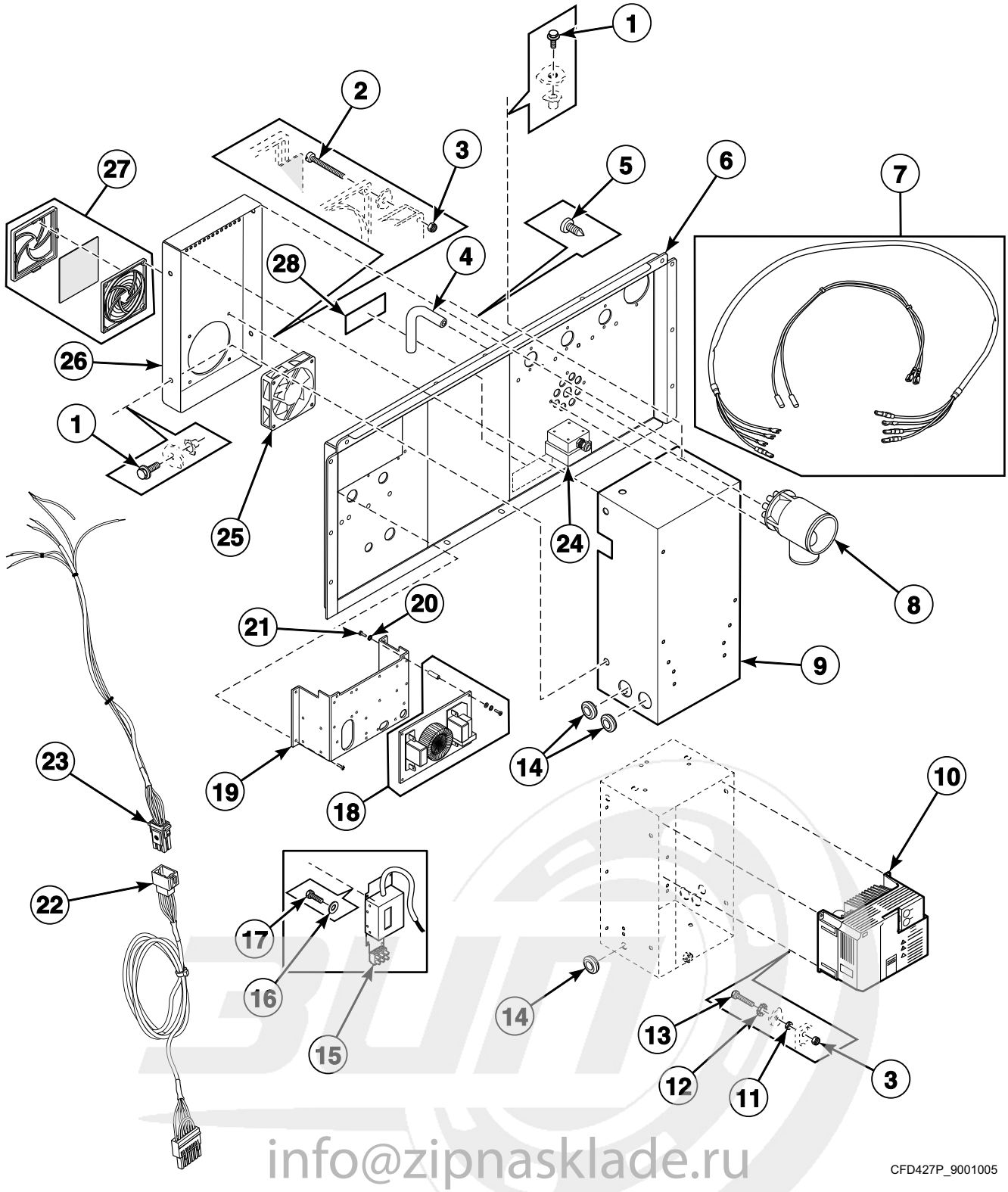


info@zipnasklade.ru
8(800)500-69-51


© Copyright, Alliance Laundry Systems LLC – DO NOT COPY or TRANSMIT

# Upper Back Panel - 55 Pound Models

| REF | PART NO. | DESCRIPTION | COMMENTS |
|---|---|---|---|
| | 9001011 | Parameter Unit Assembly | Includes 9001011 Parameter Unit Assembly and 9001895 Parameter Unit Program Cable; Hand held |
| | F8410901 | Parameter Unit Assembly | Used with 500-series inverter drives; Mounts to the inverter drive |
| 1 | 9001310 | Bolt | |
| 2 | 9001317 | Bolt | |
| 3 | 9001267 | Nut | |
| 4 | 9001531 | Pressure Hose | |
| 5 | B12350903 | Screw | |
| 6 | 9001062 | Backbridge | Models through Serial No. 0605755252 |
| 7 | 9002078 | Inverter to Motor Harness | |
| 8 | 9001550 | Liquid Soap Manifold | |
| 9 | 9001060 | Inverter Drive Box | |
| 10 | 227/00238/00 | Inverter | N-voltage; 440-480 Volt/3 Phase, 2.2 kW; 500-series |
| | 9002035 | Inverter Fan | |
| | F8421105 | Drive | Q and X-voltage; 700-series; Used with models with V-belts |
| | F8421107 | Drive | Q and X-voltage; 700-series; Used with models with flat belts |
| | F8421106 | Drive | N and P-voltage; 700-series; Used with models with V-belts |
| | F8421108 | Drive | N and P-voltage; 700-series; Used with models with flat belts |
| | F8421005 | Inverter Kit | Q and X-voltage; 700-series; Used with models with V-belts; Includes F8421105 Drive |
| | F8421007 | Inverter Kit | Q and X-voltage; 700-series; Used with models with flat belts; Includes F8421107 Drive |
| | F8421006 | Inverter Kit | N and P-voltage; 700-series; Used with models with V-belts; Includes F8421106 Drive, F8409501 Mounting Plate Assembly and F430903 Screw |
| | F8421008 | Inverter Kit | N and P-voltage; 700-series; Used with models with flat belts; Includes F8421108 Drive, F8409501 Mounting Plate Assembly and F430903 Screw |
| 11 | 9001252 | Nut | |
| 12 | 9001242 | Washer | |
| 13 | 9001278 | Bolt | |
| 14 | 9001530 | Grommet | |
| 15 | 9001593 | Noise Filter | |
| 16 | 9001229 | Washer | |
| 17 | 9001323 | Screw | |
| 18 | 210/00027/UL00 | Filter | 16A1; Standard; Models starting 1/8/04 |
| | 9001899 | Filter | 45A1; 220 Volt/1 Phase models with electric heat; Models starting 1/8/04 |
| | 227/00242/00 | Noise Filter | 16A3; 220 Volt/3 Phase, 4.2 and 6 kW models with electric heat; Models starting 1/8/04 |
| | 9001898 | Filter | 40A3; 400 Volt/3 Phase, 9 kW models with electric heat; Models starting 1/8/04 |
| 19 | 9001952 | Electrical Connection Plate | Models through Serial No. 0605755252 |
| 20 | 9001243 | Washer | |
| 21 | 9001292 | Bolt | |
| 22 | 9001905 | Micro to Connector Harness | From the main control to the inverter drive; Requires the inverter jumper be in the “source” position |
| 23 | 9001904 | Connector to Inverter Harness | From the main control to the inverter drive |
| 24 | 9001986 | Transformer | N-voltage |
| 25 | 9001375 | Cooling Fan | |
| 26 | F200167500 | AC Drive Cover | |
| 27 | 9001376 | Fan Grill | Models through 10/5/08 |
| | 209/00287/11 | AC Drive Filter | Models starting 10/6/08 |
| 28 | B12355001 | Voltage Discharge Decal | |

info@zippackbde.ru
8(800)500-69-51


© Copyright, Alliance Laundry Systems LLC – DO NOT COPY or TRANSMIT

# Upper Back Panel - 75 Pound Models

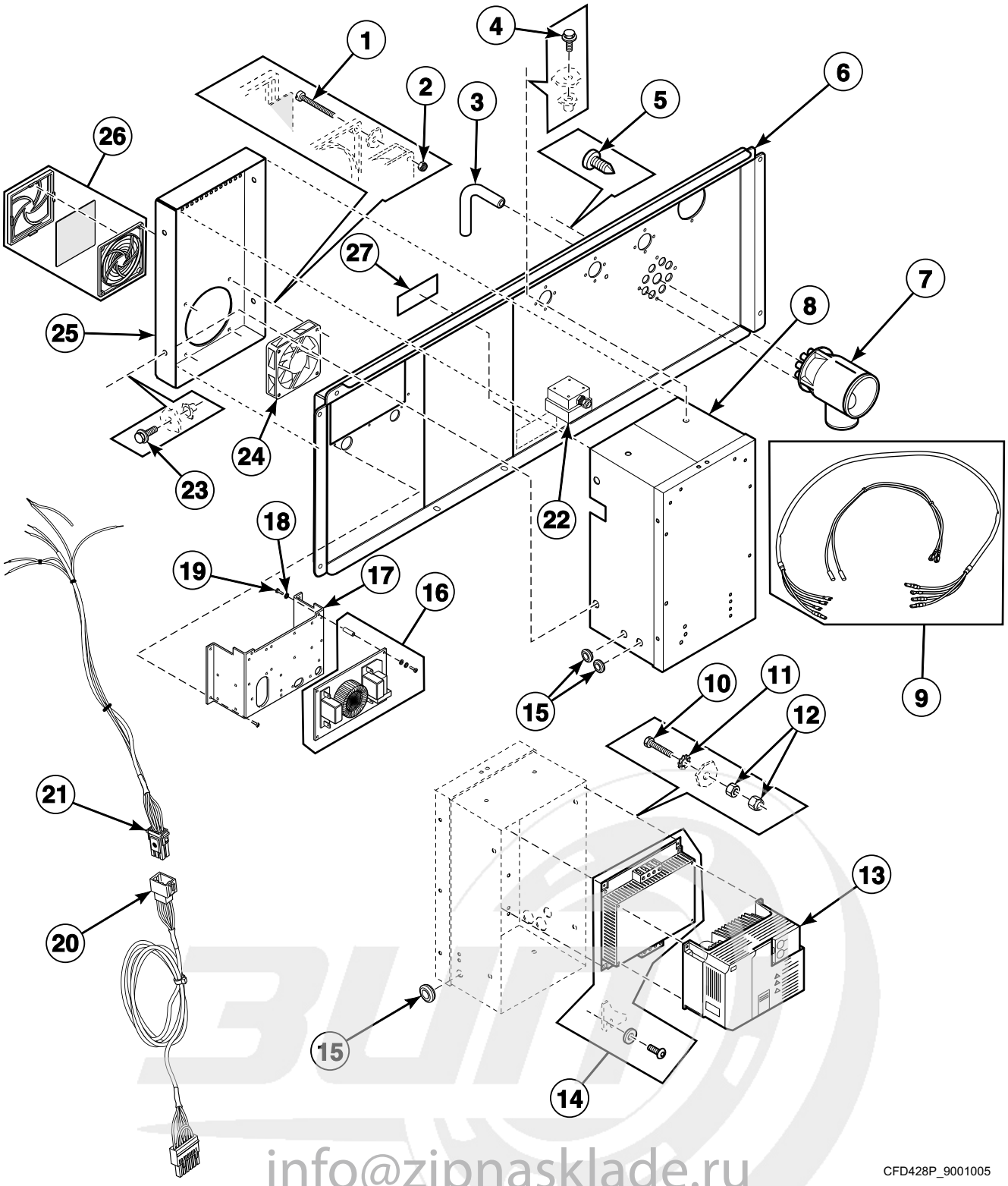


info@zipnasklade.ru
8(800)500-69-51


© Copyright, Alliance Laundry Systems LLC – DO NOT COPY or TRANSMIT

# Upper Back Panel - 75 Pound Models

| REF | PART NO. | DESCRIPTION | COMMENTS |
|---|---|---|---|
| | 9001011 | Parameter Unit Assembly | Includes 9001011 Parameter Unit Assembly and 9001895 Parameter Unit Program Cable; Hand held |
| | F8410901 | Parameter Unit Assembly | Used with 500-series inverter drives; Mounts to the inverter drive |
| 1 | 9001317 | Bolt | |
| 2 | 9001267 | Nut | |
| 3 | 9001531 | Pressure Hose | |
| 4 | 9001310 | Bolt | |
| 5 | B12350903 | Screw | |
| 6 | 9002092 | Backbridge | Models through Serial No. 0605775058 |
| 7 | 9001550 | Liquid Soap Manifold | |
| 8 | 9001059 | Inverter Drive Box | |
| 9 | 210/38729UL/15 | Inverter to Motor Harness | |
| 10 | 9001278 | Bolt | |
| 11 | 9001242 | Washer | |
| 12 | 9001261 | Nut | |
| 13 | 227/00224/00 | Inverter | Q-voltage; 3.7 kW; 3 x 240 Volt; 500-series |
| | 9001586 | Inverter | N and P-voltage; 3.7 kW; 3 x 380 Volt; 500-series |
| | 9002035 | Inverter Fan | |
| | F8421109 | Drive | Q-voltage; 700-series; Used with models with V-belts |
| | F8421111 | Drive | Q-voltage; 700-series; Used with models with flat belts |
| | F8421110 | Drive | N and P-voltage; 700-series; Used with models with V-belts |
| | F8421112 | Drive | N and P-voltage; 700-series; Used with models with flat belts |
| | F8421009 | Inverter Kit | Q-voltage; 700-series; Used with models with V-belts; Includes F8421109 Drive |
| | F8421011 | Inverter Kit | Q-voltage; 700-series; Used with models with flat belts; Includes F8421111 Drive |
| | F8421010 | Inverter Kit | N and P-voltage; 700-series; Used with models with V-belts; Includes F8421110 Drive, F8409501 Mounting Plate Assembly and F430903 Screw |
| | F8421012 | Inverter Kit | N and P-voltage; 700-series; Used with models with flat belts; Includes F8421112 Drive, F8409501 Mounting Plate Assembly and F430903 Screw |
| 14 | 9001590 | Noise Filter | |
| 15 | 9001530 | Grommet | |
| 16 | 210/00027/UL00 | Filter | 16A1; Standard; Models starting 1/8/04 |
| | 9001899 | Filter | 45A1; 220 Volt/1 Phase models with electric heat; Models starting 1/8/04 |
| | 227/00242/00 | Noise Filter | 16A3; 220 Volt/3 Phase, 4.2 and 6 kW models with electric heat; Models starting 1/8/04 |
| | 9001898 | Filter | 40A3; 400 Volt/3 Phase, 9 kW models with electric heat; Models starting 1/8/04 |
| 17 | 9001902 | Electrical Connection Plate | Models through Serial No. 0605775058 |
| 18 | 9001243 | Washer | |
| 19 | 9001292 | Bolt | |
| 20 | B12371101 | Micro to Connector Harness | Q-voltage; From the main control to the inverter drive; Requires the inverter jumper to be in the “sink” position |
| | 9001905 | Micro to Connector Harness | N and P-voltage; From the main control to the inverter drive; Requires the inverter jumper to be in the “source” position |
| 21 | 9001904 | Connector to Inverter Harness | From the main control to the inverter drive |
| 22 | 9001986 | Transformer | N-voltage |
| 23 | 9001310 | Bolt | |
| 24 | 9001375 | Cooling Fan | |
| 25 | 9001061 | Inverter Box Cover | |
| 26 | 9001376 | Fan Grill | Models through 10/5/08 |
| | 209/00287/11 | AC Drive Filter | Models starting 10/6/08 |
| 27 | B12355001 | Voltage Discharge Decal | |

info@zlpnasklade.ru
8(800)500-69-51


© Copyright, Alliance Laundry Systems LLC – DO NOT COPY or TRANSMIT

# Upper Back Panel - 55 Pound Models Starting Serial No. 0605755253 and 75 Pound Models Starting Serial No. 060775059

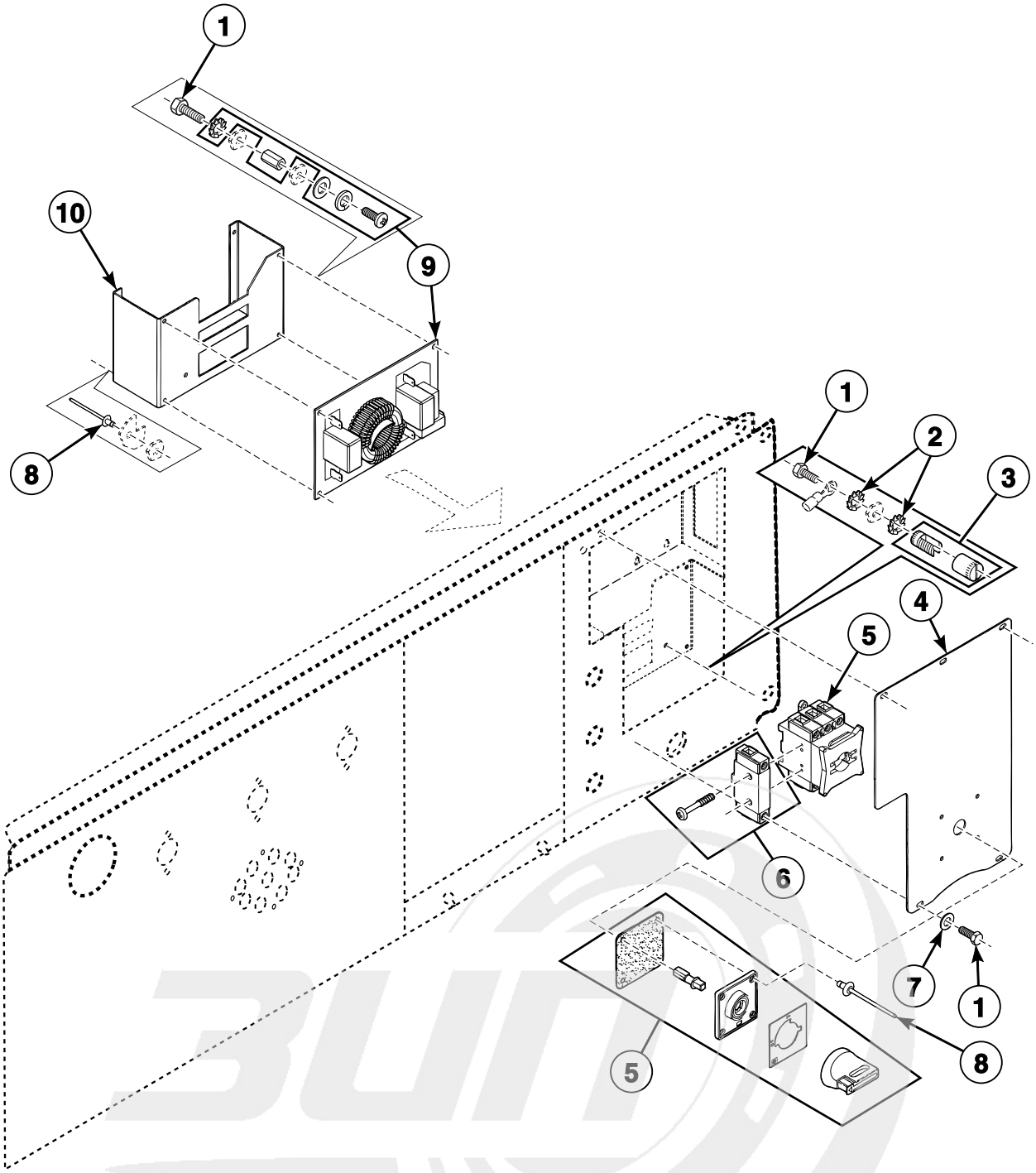


CFD200P_9001005

info@zipnasklade.ru
8(800)500-69-51


© Copyright, Alliance Laundry Systems LLC – DO NOT COPY or TRANSMIT

# Upper Back Panel - 55 Pound Models Starting Serial No. 0605755253 and 75 Pound Models Starting Serial No. 060775059

| REF | PART NO. | DESCRIPTION | COMMENTS |
|---|---|---|---|
| 1 | 9001292 | Bolt | |
| 2 | 9001243 | Washer | |
| 3 | 9001350 | Ground Terminal | |
| 4 | 9002088 | Main Switch Cover | |
| 5 | 9001390 | Main Switch | Standard and steam heat |
| | 9002089 | Main Switch | Electric heat; 40 A |
| | 9001387 | Main Switch | Electric heat; 80 A |
| 6 | 9001391 | Neutral Terminal Block | 25 A VZ-11 |
| | 9001388 | Neutral Terminal Block | 63/80 A VZ-12 |
| 7 | 9001229 | Washer | |
| 8 | 9001346 | Rivet | |
| 9 | 210/00027/UL00 | Filter | 16A1; Standard; Models starting 1/8/04 |
| | 9001899 | Filter | 45A1; 220 Volt/1 Phase models with electric heat; Models starting 1/8/04 |
| | 9001897 | Filter | 16A3; 220 Volt/3 Phase, 4.2 and 6 kW models with electric heat; Models starting 1/8/04 |
| | 9001898 | Filter | 40A3; 220 Volt/3 Phase, 9 kW models with electric heat; Models starting 1/8/04 |
| 10 | 9002090 | Filter Bracket | |

info@zipnasklade.ru
8(800)500-69-51


© Copyright, Alliance Laundry Systems LLC – DO NOT COPY or TRANSMIT

# Balance Switch

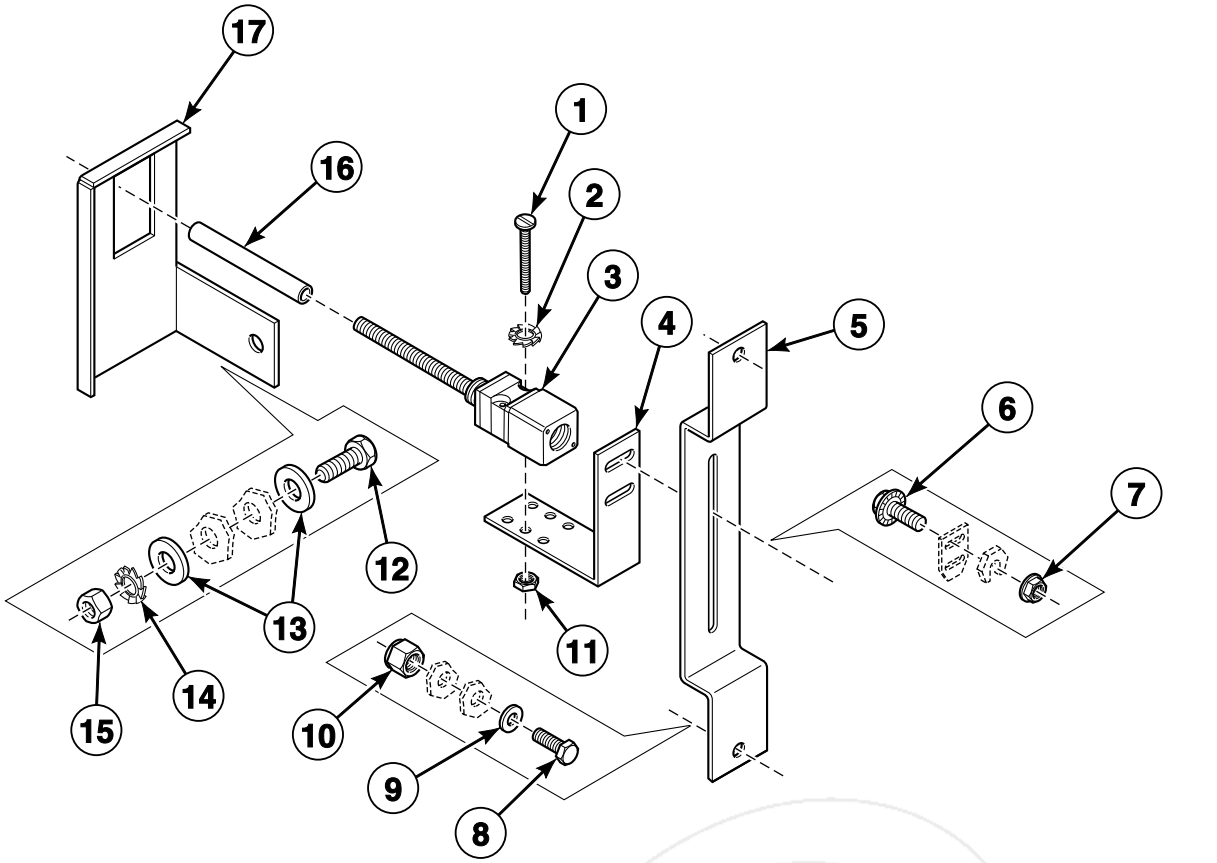


CFD28P_9001005

info@zipnasklade.ru
8(800)500-69-51


© Copyright, Alliance Laundry Systems LLC – DO NOT COPY or TRANSMIT

# Balance Switch

| REF | PART NO. | DESCRIPTION | COMMENTS |
|---|---|---|---|
| 1 | 9001325 | Screw | |
| 2 | 9001243 | Washer | |
| 3 | 9001369 | Out-of-Balance Switch | |
| 4 | 9001041 | Tilt Switch Bracket | |
| 5 | 9001056 | Out-of-Balance Switch Bracket | |
| 6 | 9001310 | Bolt | |
| 7 | 9001311 | Nut | |
| 8 | 9001277 | Bolt | |
| 9 | 9001230 | Washer | |
| 10 | 9001254 | Nut | |
| 11 | 9001252 | Nut | |
| 12 | 9001287 | Bolt | |
| 13 | 9001216 | Washer | |
| 14 | 9001240 | Washer | |
| 15 | 9001249 | Nut | |
| 16 | 9001766 | Out-of-Balance Switch Boot | |
| 17 | B12485001 | Tilt Detector Plate | |

info@zipnasklade.ru
8(800)500-69-51


© Copyright, Alliance Laundry Systems LLC – DO NOT COPY or TRANSMIT

# Supply Dispenser - Models UX055PVXF7, UX55PVXF6 and UX55PVXF7

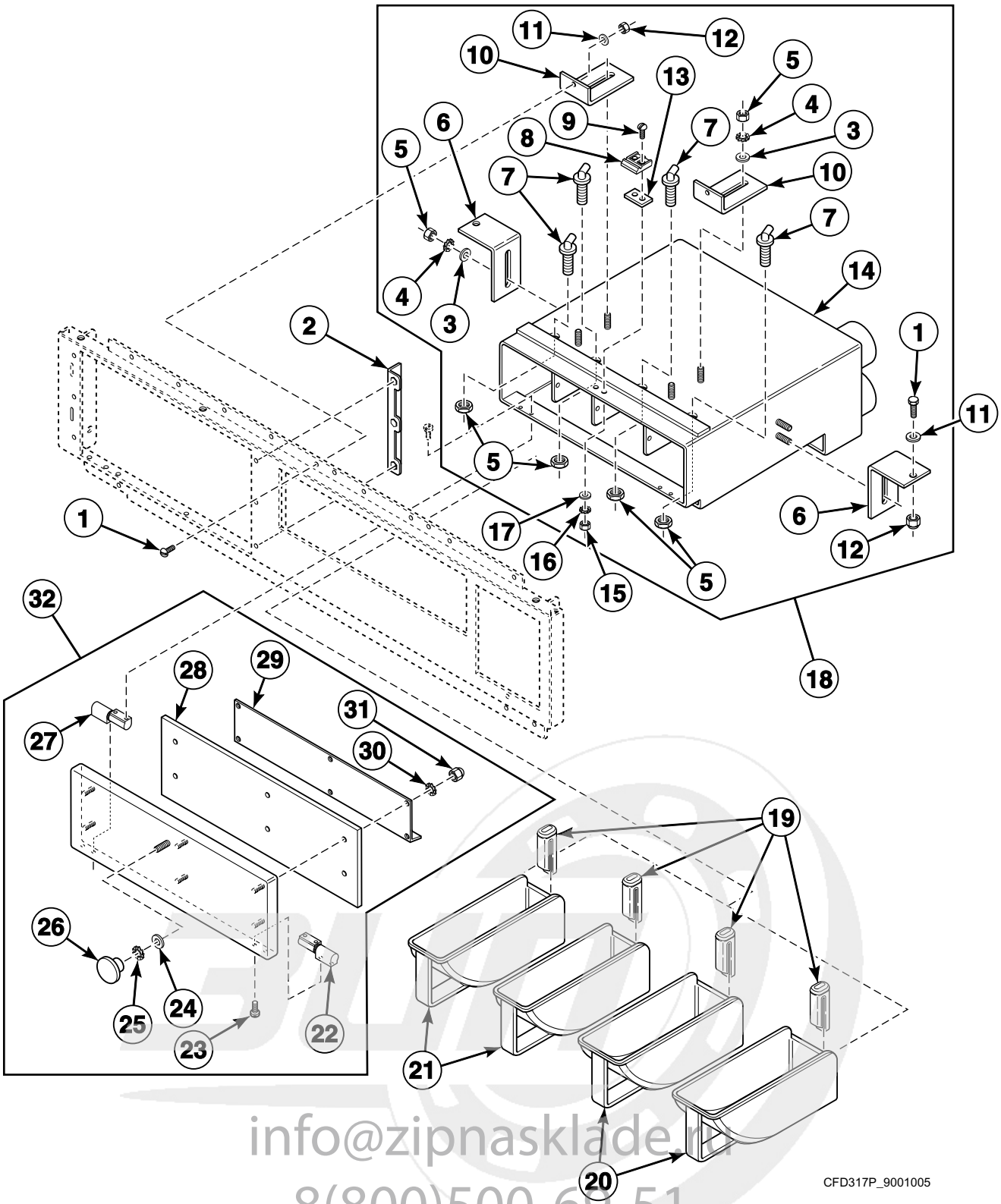


info@zipnasklade.ru
8(800)500-69-51


© Copyright, Alliance Laundry Systems LLC – DO NOT COPY or TRANSMIT

# Supply Dispenser - Models UX055PVXF7, UX55PVXF6 and UX55PVXF7

| REF | PART NO. | DESCRIPTION | COMMENTS |
|---|---|---|---|
| 1 | F430939 | Screw | |
| 2 | 111/10310/02 | Control Module Wrap Brace | |
| 3 | F431147 | Washer | |
| 4 | F430322 | Washer | |
| 5 | F431005 | Nut | |
| 6 | F0609664-00 | Supply Dispenser Mounting Bracket | |
| 7 | F8322001 | Injection Nozzle | |
| 8 | F432223 | Supply Dispenser Lid Latch | |
| 9 | F430909 | Screw | |
| 10 | F0637866-00 | Supply Dispenser Mounting Bracket | |
| 11 | F431147 | Washer | |
| 12 | F431024 | Nut | |
| 13 | 111/10313/00 | Dispenser Lock Plate | |
| 14 | F0637862-00 | Supply Dispenser Weldment | |
| 15 | F431000 | Nut | |
| 16 | F431106 | Washer | |
| 17 | F431133 | Washer | |
| 18 | F0637838-00 | Supply Dispenser Assembly | Includes items 3-17 |
| 19 | F150390 | Siphon Tube | |
| 20 | F150369 | Supply Dispenser Cup | 32 oz. |
| 21 | F150368 | Supply Dispenser Cup | 20 oz. |
| 22 | F190202P | Lift-Off Hinge | |
| 23 | F430903 | Screw | |
| 24 | F431105 | Washer | |
| 25 | F431137 | Washer | |
| 26 | F190101 | Push-Pull Knob | |
| 27 | F190205P | Lift-Off Hinge | |
| 28 | F0637836-00 | Gasket Cover | |
| 29 | F0637835-00 | Gasket Retaining Plate | |
| 30 | F431106 | Washer | |
| 31 | F431037 | Nut | |
| 32 | F0637833-00 | Supply Dispenser Cover Assembly | Includes items 22-31 |

info@zipnasklade.ru
8(800)500-69-51


© Copyright, Alliance Laundry Systems LLC – DO NOT COPY or TRANSMIT

# Supply Dispenser - All Models Except UX055PVXF7, UX55PVXF6 and UX55PVXF7

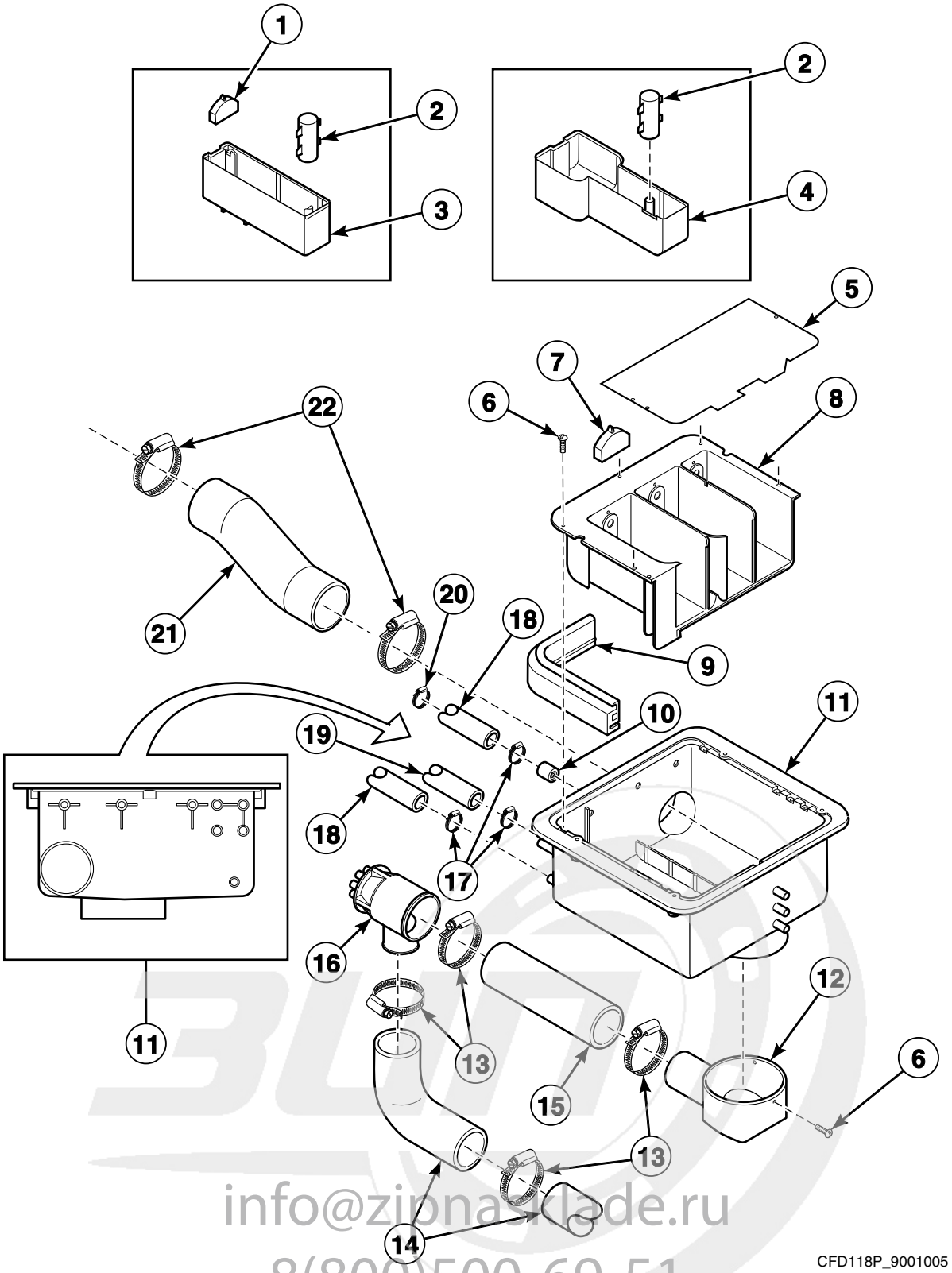


info@zipnaklade.ru
8(800)500-69-51


© Copyright, Alliance Laundry Systems LLC – DO NOT COPY or TRANSMIT

# Supply Dispenser - All Models Except UX055PVXF7, UX55PVXF6 and UX55PVXF7

| REF | PART NO. | DESCRIPTION | COMMENTS |
|---|---|---|---|
| 1 | 9001508 | Softener Spray Nozzle | |
| 2 | 9001507 | Soap Dispenser Rinse Siphon | |
| 3 | 9001506 | Rinse Insert | |
| 4 | 9001511 | Liquid Soap Dispenser Insert | |
| 5 | F200047800 | Supply Deflector | |
| 6 | B12347509 | Screw | |
| 7 | 9001509 | Soap Spray Nozzle | |
| 8 | 223/00102/30 | Soap Dispenser Assembly | |
| 9 | 9001522 | Soap Dispenser Gasket | |
| 10 | F060334200 | Restrictor Assembly | |
| 11 | 9001513 | Dispenser Assembly | |
| 12 | 9001538 | Dispenser Drain Funnel | |
| 13 | 9001502 | Hose Clamp | |
| 14 | B12322401 | Siphon Break Hose | 55 pound models |
| | B12322402 | Siphon Break Hose | 75 pound models |
| 15 | 9001673 | Siphon Break Dispenser Hose | 55 pound models |
| | 9001678 | Siphon Break Dispenser Hose | 75 pound models |
| 16 | 9001550 | Liquid Soap Manifold | |
| 17 | F200205 | Hose Clamp | No. 10 |
| 18 | 9001499 | Water Hose | |
| 19 | 9001500 | Water Hose | |
| 20 | 36801 | Hose Clamp | No. 8 |
| 21 | 9001521 | Vent Hose | |
| 22 | 9001495 | Hose Clamp | |

info@zipnasklade.ru
8(800)500-69-51


© Copyright, Alliance Laundry Systems LLC – DO NOT COPY or TRANSMIT

# Electric Heating Option

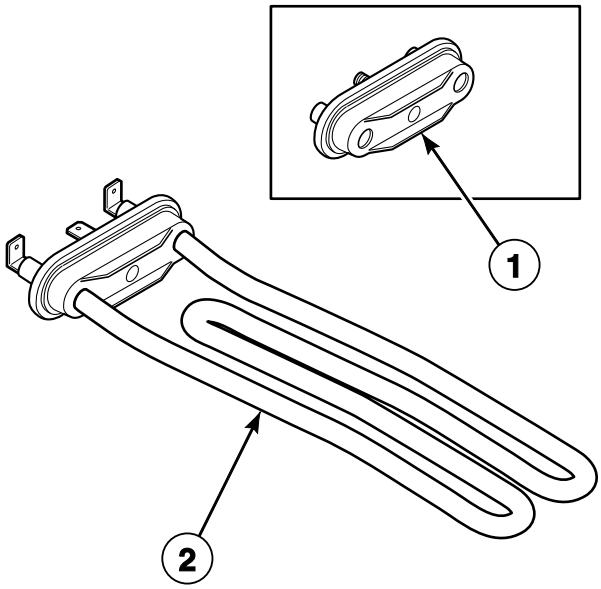


CFD81P_9001005

info@zipnasklade.ru
8(800)500-69-51


© Copyright, Alliance Laundry Systems LLC – DO NOT COPY or TRANSMIT

# Electric Heating Option

| REF | PART NO. | DESCRIPTION | COMMENTS |
|---|---|---|---|
| **1** | F360202 | Heating Element Plug | |
| **2** | 209/00562/20 | Heating Element | 3000 W |

info@zipnasklade.ru
8(800)500-69-51


© Copyright, Alliance Laundry Systems LLC – DO NOT COPY or TRANSMIT

# Steam Heating Option

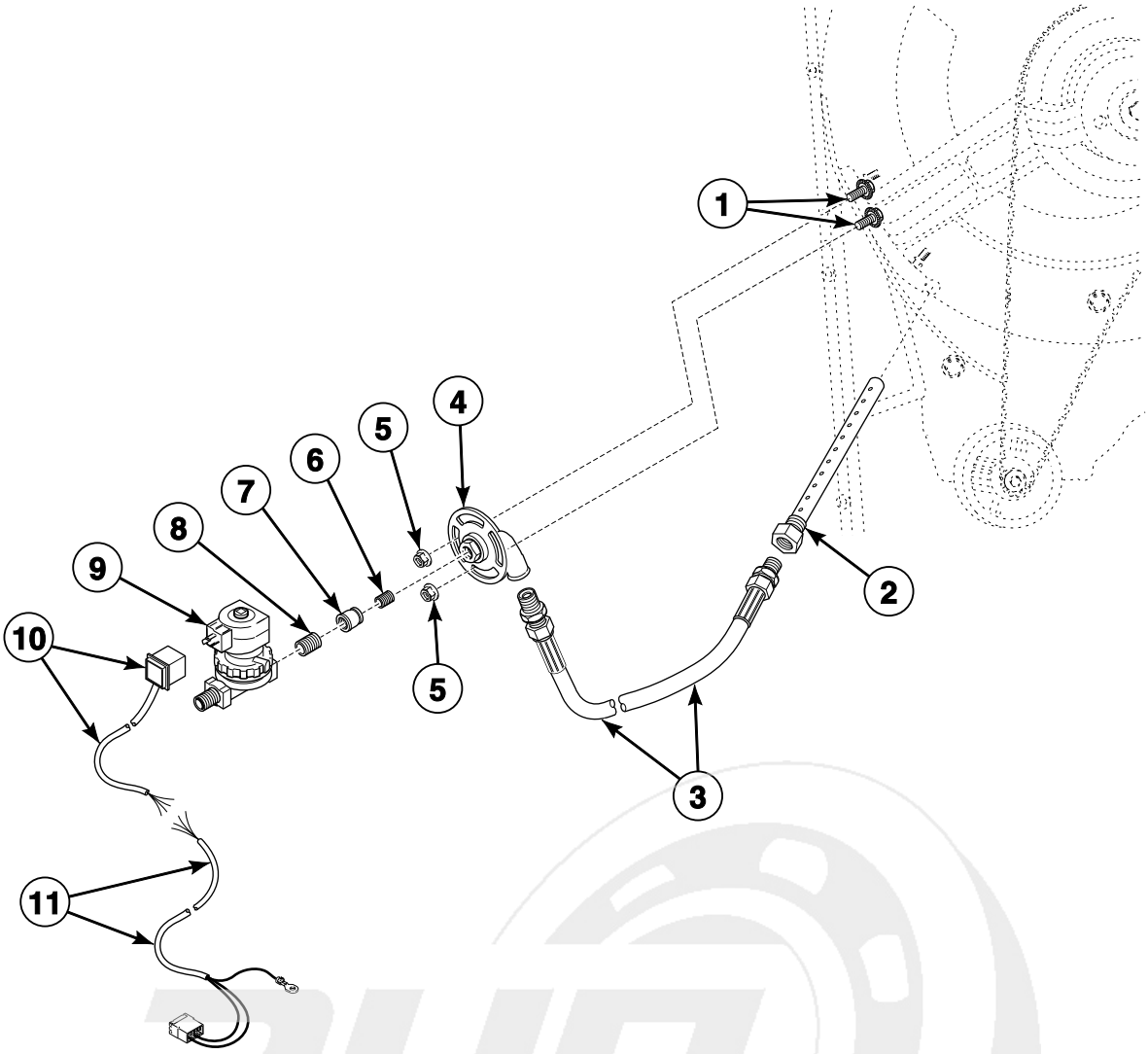


CFD106P_9001005

info@zipnasklade.ru
8(800)500-69-51


© Copyright, Alliance Laundry Systems LLC – DO NOT COPY or TRANSMIT

# Steam Heating Option

| REF | PART NO. | DESCRIPTION | COMMENTS |
|---|---|---|---|
| | 808P3 | Steam Kit | Includes items 1-11 |
| **1** | 9001310 | Bolt | |
| **2** | 9001118 | Steam Injector | |
| **3** | 9001471 | Steam Hose | |
| **4** | 9001107 | Steam Inlet | |
| **5** | 9001311 | Nut | |
| **6** | 70435601 | Pipe Nipple | 1/2 inch |
| **7** | F200001100 | Reducer | |
| **8** | F200001200 | Nipple | 3/8 inch |
| **9** | F380787P | Steam Valve | |
| **10** | F605220 | Steam Valve Harness | |
| **11** | 9001751 | Main Control Heat Harness | |

info@zipnasklade.ru
8(800)500-69-51


© Copyright, Alliance Laundry Systems LLC – DO NOT COPY or TRANSMIT

# Notes

info@zipnasklade.ru
8(800)500-69-51


© Copyright, Alliance Laundry Systems LLC – DO NOT COPY or TRANSMIT

# Parts Index

## A


AC Drive Cover
F200167500 ..... 81
AC Drive Filter
209/00287/11 ..... 81


## B


Backbridge
111/10303/00 ..... 65
9001062 ..... 63, 79, 81
9002092 ..... 83
Balance Switch Access Cover
F0637820-00 ..... 53
Ball Bearing
212/00024/01 ..... 23
9001438 ..... 23, 25, 27
Basket
B12380901 ..... 19, 21, 29
B12381001 ..... 19, 21, 29
Basket and Pulley Kit
B12537901 ..... 19, 21, 31
Basket Kit
B12543201 ..... 19, 21, 29
Bearing
F100134 ..... 25
Bearing and Seal Kit
3884P ..... 25
Bearing Housing Assembly
139/10006/00 ..... 23, 25
9001451 ..... 27
Bearing Housing Cover
9001097 ..... 27
Bearing Replacement Kit
891P3 ..... 23
892P3 ..... 27
Bearing Replacement Tool Kit
381P3 ..... 25
385P4 ..... 23, 27
Bearing Retainer Ring
9001036 ..... 33
Bearing Spacer
9001602 ..... 31
Belt
226/00149/00 ..... 29
226/00151/00 ..... 31
9001569 ..... 29
Belt Adjusting Rod
9001020 ..... 33
Bolt
206/00032/00 ..... 19, 21
206/00087/00 ..... 15, 17
206/00099/00 ..... 73
206/00153/00 ..... 13, 15, 17
9001272 ..... 23, 25
9001273 ..... 39, 41, 43, 63, 65, 67, 69, 71
9001274 ..... 23, 25, 27, 45, 47, 49
9001275 ..... 37, 63, 65, 67, 69, 71
9001277 ..... 37, 59, 87
9001278 ..... 81, 83
9001279 ..... 79
9001283 ..... 33, 35
9001284 ..... 29, 31
9001286 ..... 33, 35
9001287 ..... 19, 21, 39, 41, 87
9001288 ..... 27
9001292 ..... 71, 79, 81, 83, 85
9001296 ..... 63, 65, 67, 69, 71
9001297 ..... 35
9001305 ..... 19, 21
9001306 ..... 19, 21
9001307 ..... 33, 35
9001310 ..... 57, 59, 61, 63, 65, 67, 69, 71, 73, 75, 79, 81, 83, 87, 95
9001317 ..... 81, 83
9001342 ..... 75
9001557 ..... 13, 15, 17
9001901 ..... 29
9001949 ..... 43
Bushing
F130315 ..... 77
9001271 ..... 75


## C


Caddy Bracket
9001559 ..... 23, 25, 27
9001560 ..... 23, 25, 27
Circuit Board Cover
229/00289/00 ..... 55
Clamp
223/00009/00 ..... 77
Connector
9001888 ..... 79
Connector to Inverter Harness
9001904 ..... 81, 83
Contact Block
44018701 ..... 53, 55
44018901 ..... 53, 55
Contactor
9001352 ..... 57, 59, 61
9002066 ..... 57, 59, 61
Control Module Bottom Assembly
F0637821-00 ..... 53
Control Module Face
F0637813-00 ..... 53
Control Module Wrap
F0637819-00 ..... 53
Control Module Wrap Brace
111/10310/02 ..... 89
Control Panel
111/10302/00 ..... 65
9001068 ..... 55, 67, 69, 71
9001089 ..... 55, 63
Cooling Fan
9001375 ..... 33, 35, 81, 83
Cordlock
9001431 ..... 79
9001432 ..... 33, 35, 79


N/A items do not appear in index.

info@zipnaskladе.ru
8(800)500 69-51


© Copyright, Alliance Laundry Systems LLC – DO NOT COPY or TRANSMIT

Counter Ring
9001483 ..... 29
9001601 ..... 31

Counterweight
9001023 ..... 19, 21
9001024 ..... 19, 21

Coupling
B12341901 ..... 37
223/00360/50 ..... 77
223/00360/60 ..... 77

Cover
111/10315/00 ..... 73

Cylinder and Shaft Assembly
B12327101 ..... 19, 21, 29

## D

Diaphragm
F0638025-00 ..... 77
9001743 ..... 79

Diaphragm and Guide Kit
G582P3 ..... 77

Dispenser Assembly
9001513 ..... 91

Dispenser Drain Funnel
9001538 ..... 91

Dispenser Front Mounting Plate
9001075 ..... 63, 65

Dispenser Lock Plate
111/10313/00 ..... 89

Dispenser Mounting Plate
9001054 ..... 67

Dispenser Rear Mounting Plate
9001076 ..... 63, 65

Display
209/00580/03 ..... 53, 55

Door
118/00125/00 ..... 47, 49
9001131 ..... 45

Door Front Panel
111/05015/00 ..... 21
9001088 ..... 19
9001096 ..... 19

Door Glass
B12449801 ..... 45, 47, 49

Door Glass Seal
9001501 ..... 45, 47, 49

Door Handle
217/00055/00 ..... 45, 47, 51
217/00065/00 ..... 49

Door Handle Catch
9001473 ..... 51

Door Handle Decal
9001741 ..... 19, 21

Door Handle Latch
9001474 ..... 51

Door Handle Stop
9001467 ..... 45, 47, 49

Door Hinge Block
9001628 ..... 45, 47, 49

Door Hinge Plate Assembly
9001038 ..... 45, 47, 49

Door Hinge Spacer
9001105 ..... 45, 47, 49
9001106 ..... 45, 47, 49

Door Lock Assembly
B12517701 ..... 43

Door Lock Microswitch
9001371 ..... 43

Door Lock Pin and Pivot Block Kit
9001997 ..... 43, 45, 47, 49

Door Lock Pin Bracket
9001998 ..... 43

Door Lock Spacer
9001477 ..... 43

Door Lock Spring
9001558 ..... 43

Door Release Wire
9001950 ..... 43

Door Solenoid
209/00703/50 ..... 43

Drain Elbow
223/00368/00 ..... 37

Drain Kit
831P3 ..... 41

Drain Pipe
9001518 ..... 39, 41

Drain Support Bracket
111/10300/00 ..... 37

Drain Tee
F0380318-00 ..... 37

Drain Tub to Drain Valve Hose
9001525 ..... 39

Drain Valve
F0380632-00 ..... 37
9001355 ..... 39, 41
9001361 ..... 41

Drain Valve Bracket
F0638013-00 ..... 37

Drain Valve Bracket Plate
111/10318/00 ..... 37

Drain Valve Harness
900/00261/UL00 ..... 39, 41

Drain Valve Mounting Bracket
111/10312/00 ..... 37

Drain Valve Overflow Plug
9001503 ..... 39, 41

Drain Valve Plate Assembly
9001099 ..... 39, 41

Drain Valve to Drain Pipe Hose
9001526 ..... 37, 39, 41

Drain Valve Wiring Harness
210/00905/00 ..... 37

Drive
F8421105 ..... 81
F8421106 ..... 81
F8421107 ..... 81
F8421108 ..... 81
F8421109 ..... 83
F8421110 ..... 83
F8421111 ..... 83
F8421112 ..... 83

Drum
B12327301 ..... 19, 21, 31

info@zipnaskade.ru
8(800)500 69-51

N/A items do not appear in index.


© Copyright, Alliance Laundry Systems LLC – DO NOT COPY or TRANSMIT

## E


Elbow
223/00363/00 ..... 37

Electrical Component Extension Plate
9001144 ..... 57

Electrical Component Mounting Plate
9001958 ..... 61

Electrical Component Plate
9001053 ..... 57

Electrical Components Plate
9001057 ..... 59
9001146 ..... 59
9002081 ..... 61
9002082 ..... 61

Electrical Connection Plate
9001040 ..... 79
9001902 ..... 83
9001952 ..... 81

Electrical Connection Sticker
9001594 ..... 79

Exhaust Valve Hose
223/00170/00 ..... 41


## F


Fan Grill
9001376 ..... 81, 83

Filter
209/00287/11 ..... 83
209/00385/00 ..... 79
209/00385/01 ..... 79
210/00027/UL00 ..... 81, 83, 85
9001897 ..... 85
9001898 ..... 81, 83, 85
9001899 ..... 81, 83, 85

Filter Bracket
9002090 ..... 85

Finger Guard Extension Assembly
F0637762-00 ..... 63, 65

Flat Cable
9001417 ..... 53, 55

Flow Restrictor
223/00367/00 ..... 77
223/00390/00 ..... 79

Frame
9001100 ..... 11
9001101 ..... 9

Front Panel
9001130 ..... 19, 21

Front Panel Gasket
223/00242/50 ..... 19, 21

Fuse
9001379 ..... 55
9001384 ..... 79

Fuse Holder
9001364 ..... 79


## G


Gasket
246/00149/00 ..... 37
9001607 ..... 19, 21
9001608 ..... 63, 65, 67, 69, 71

Gasket Cover
F0637836-00 ..... 89

Gasket Retaining Plate
F0637835-00 ..... 89

Gravity Drain Valve
803292 ..... 37

Grease Ring
9001441 ..... 27

Grommet
9001530 ..... 81, 83
9001539 ..... 57, 59, 79

Ground Terminal
9001350 ..... 79, 85
9001419 ..... 43


## H


Heating Element
209/00562/20 ..... 93

Heating Element Plug
F360202 ..... 93

Hinge
9001486 ..... 45, 47, 49

Hose
F0150470-01 ..... 37
223/00359/00 ..... 77
223/00360/00 ..... 77

Hose Barb
9001496 ..... 57, 59

Hose Clamp
F200201 ..... 37
F200205 ..... 79, 91
F200213 ..... 37
223/00010/00 ..... 77
36801 ..... 91
9001492 ..... 57, 59, 79
9001493 ..... 39, 41
9001494 ..... 37, 39, 41
9001495 ..... 77, 91
9001502 ..... 39, 41, 91

Hose Vent
9001510 ..... 77, 79


## I


Injection Nozzle
F8322001 ..... 89

Inlet Valve Restrictor
F200052400 ..... 79

Inlet Valve Solenoid
9001753 ..... 79

Inlet Valve, 2-Way
209/00316/00 ..... 79
9001377 ..... 77, 79


info@zipnaskladc.ru
8(800)500 69 51

N/A items do not appear in index.


© Copyright, Alliance Laundry Systems LLC – DO NOT COPY or TRANSMIT

Insulating Sticker
229/00255/00 ..... 53, 55
Interlock Coil Spring
9001554 ..... 43
Interlock Lever
9001478 ..... 43
Intermediate Fan Motor Plate
9001055 ..... 33
Inverter
227/00224/00 ..... 83
227/00238/00 ..... 81
9001586 ..... 83
Inverter Box Cover
9001061 ..... 83
Inverter Drive Box
9001059 ..... 83
9001060 ..... 81
Inverter Fan
9002035 ..... 81, 83
Inverter Kit
F8421005 ..... 81
F8421006 ..... 81, 83
F8421007 ..... 81
F8421008 ..... 81
F8421009 ..... 83
F8421011 ..... 83
F8421012 ..... 83
Inverter to Motor Harness
210/38729UL/15 ..... 83
9002078 ..... 81

## K

Key
F160562 ..... 53
9001445 ..... 29, 31
Kickplate
9001090 ..... 63, 65, 67, 69, 71

## L

Latch
111/10310/03 ..... 53
Left Front Panel
9001672 ..... 63, 65
9001677 ..... 67, 69, 71
Lever Spring
9001553 ..... 43
Lid Lock
F190802P ..... 53
Lift-Off Hinge
F190202P ..... 89
F190205P ..... 89
Light Microswitch
9001372 ..... 43
Lip Seal
B12332301 ..... 25
Liquid Soap Dispenser Insert
9001511 ..... 91
Liquid Soap Manifold
9001550 ..... 77, 81, 83, 91
Lock Latch
F606295 ..... 53
Lock Shaft
9001468 ..... 43
Logo Decal
9001890 ..... 55
Lubricator
212/00002/00 ..... 27

## M

Main Control
9002100 ..... 55
9002100AR ..... 53
9002100MA ..... 53
Main Control Heat Harness
9001751 ..... 95
Main Switch
9001387 ..... 85
9001390 ..... 85
9002089 ..... 85
Main Switch Cover
9002088 ..... 85
Micro to Connector Harness
B12371101 ..... 83
9001905 ..... 81, 83
Motor
B12510901 ..... 33
9001576P ..... 35
Motor Plate
9001029 ..... 35
9001030 ..... 33

## N

Neutral Terminal Block
9001388 ..... 85
9001391 ..... 85
Nipple
F200001200 ..... 95
Noise Filter
227/00242/00 ..... 81, 83
9001590 ..... 83
9001593 ..... 81
Noise Suppressor
9001746 ..... 57, 59
Nut
F430218 ..... 37
F431000 ..... 89
F431005 ..... 89
F431017 ..... 53
F431024 ..... 37, 89
F431037 ..... 89
204/00114/00 ..... 77
9001249 ..... 39, 41, 87
9001250 ..... 57, 67, 69, 71
9001252 ..... 35, 63, 65, 79, 81, 87
9001253 ..... 43, 55
9001254 ..... 19, 21, 37, 43, 63, 65, 67, 69, 71, 87
9001255 ..... 13, 15, 17, 35
9001256 ..... 13, 15, 17
9001257 ..... 13, 15, 17, 33
9001258 ..... 45, 47, 49

info@zipnaskype.ru
8(800)500-6151

N/A items do not appear in index.


© Copyright, Alliance Laundry Systems LLC – DO NOT COPY or TRANSMIT

9001260 ..... 39, 41, 45, 47, 49, 63, 65, 67, 69, 71
9001261 ..... 83
9001262 ..... 19, 21, 63, 65, 67, 69, 71
9001264 ..... 19, 21, 33, 35
9001266 ..... 13, 15, 17, 19, 21, 23, 25, 27, 33, 35, 37
9001267 ..... 35, 71, 81, 83
9001268 ..... 33
9001269 ..... 53, 55
9001270 ..... 79
9001311 ..... 57, 59, 63, 65, 67, 87, 95
9001349 ..... 75

## O

O-Ring
9001460 ..... 23
9001469 ..... 45, 47, 49
9001599 ..... 27

Outlet Pipe Plate Assembly
9001037 ..... 39, 41, 63, 65, 67, 69, 71

Out-of-Balance Switch
9001369 ..... 87

Out-of-Balance Switch Boot
9001766 ..... 87

Out-of-Balance Switch Bracket
9001056 ..... 87

Overflow Hose
223/00131/00 ..... 39, 41

Overlay
F8435601 ..... 55
9001561 ..... 53, 55
9001563 ..... 55

Overload Contactor
9002021 ..... 61
9002022 ..... 61
9002023 ..... 61
9002024 ..... 61
9002025 ..... 61
9002026 ..... 61
9002027 ..... 61

## P

Parameter Unit Assembly
F8410901 ..... 81, 83
9001011 ..... 81, 83

Pipe
223/00370/00 ..... 37

Pipe Nipple
70435601 ..... 95

Pressure Hose
223/00333/00 ..... 57, 59, 61
9001531 ..... 81, 83

Pressure Switch
9001351 ..... 57, 59, 61

Pressure Switch Cap
9001932 ..... 61

Pressure Switch Elbow
9001542 ..... 57, 59

Pressure Switch Hose Tee
223/00173/10 ..... 57, 59, 61

Prewash and Mainwash Nozzle
9001487 ..... 79

Printboard Separator
211/00128/00 ..... 53

Programming Cable
9001418 ..... 53, 55

Programming Key
9001756 ..... 53, 55

Programming Key Contact Switch
9001378 ..... 53, 55

Pulley
185/00086/00 ..... 33
212/00009/00 ..... 31
226/00148/00 ..... 29
226/00150/00 ..... 31
226/00152/00 ..... 35
239/00013/00 ..... 29, 31
9001570 ..... 33
9001574 ..... 35
9001629 ..... 31

Pulleys and Belt Kit
967P3 ..... 29

Pushbutton
44018801 ..... 53, 55

Push-Pull Knob
F190101 ..... 89

## R

Rear Panel
111/10308/00 ..... 73
9001045 ..... 75
9001046 ..... 75

Reducer
F200001100 ..... 95

Restrictor Assembly
F060334200 ..... 91

Retainer Ring
9001440 ..... 23, 25, 27
9001452 ..... 23, 25

Right Front Panel
9001671 ..... 63, 65
9001676 ..... 67, 69, 71

Right Side Panel
111/10301/00 ..... 73

Rinse Insert
9001506 ..... 91

Rivet
9001346 ..... 53, 79, 85

Roller Bearing
9001439 ..... 27, 31

## S

Screw
B12347509 ..... 91
B12350903 ..... 81, 83
B12500801 ..... 49
F430903 ..... 89
F430909 ..... 89
F430927 ..... 37
F430939 ..... 37, 89
F430956 ..... 53
107/00136/00 ..... 77
201415 ..... 53

N/A items do not appear in index.

info@zipnaskate.ru
8(800)500-6751


© Copyright, Alliance Laundry Systems LLC – DO NOT COPY or TRANSMIT

206/00056/00 ..... 31, 35
206/00104/00 ..... 73
206/00166/00 ..... 69
207/00135/00 ..... 43
9001294 ..... 33
9001302 ..... 35
9001313 ..... 19, 21
9001323 ..... 81
9001324 ..... 43
9001325 ..... 87
9001326 ..... 45, 47
9001329 ..... 35, 79
9001330 ..... 63, 65
9001332 ..... 63, 65, 67, 69, 71
9001335 ..... 31
9001341 ..... 45, 47, 49
9001657 ..... 19, 21
9001661 ..... 63, 65, 67, 69, 71
9001670 ..... 63, 65, 67, 69, 71
9001675 ..... 19, 21
9001697 ..... 23, 25, 27
9002087 ..... 61

Seal Holder Assembly
9001117 ..... 23
9001744 ..... 27

Seal Plate
9001116 ..... 23
9001133 ..... 27

Seal Plate Assembly
B12333701 ..... 25

Shaft Seal
9001134 ..... 31
9001482 ..... 23

Shipping Brace
9001771 ..... 9
9001772 ..... 11

Shock Absorber
9001617 ..... 13
9001617P ..... 15, 17

Shock Absorber Bushing
211/00137/10 ..... 13

Shock Absorber Service Kit
B12419101 ..... 13, 15
B12460901 ..... 13, 17

Side Panel
9001135 ..... 67, 69, 71, 75
9001142 ..... 63, 65, 75

Side Panel Cover
111/10316/00 ..... 73

Siphon Break Dispenser Hose
9001673 ..... 91
9001678 ..... 91

Siphon Break Hose
B12322401 ..... 91
B12322402 ..... 91

Siphon Tube
F150390 ..... 89

Soap Box Support Plate
9001044 ..... 67

Soap Dispenser Assembly
223/00102/30 ..... 91

Soap Dispenser Cover
9001514 ..... 75

Soap Dispenser Cover Hinge Rod
9001516 ..... 75

Soap Dispenser Frame
9001515 ..... 75

Soap Dispenser Gasket
9001522 ..... 91

Soap Dispenser Rinse Siphon
9001507 ..... 91

Soap Harness
210/01304/07 ..... 55

Soap Injection PCB with Fuse
9001366 ..... 79

Soap Spray Nozzle
9001509 ..... 91

Softener Spray Nozzle
9001508 ..... 91

Spacer
115/00151/00 ..... 19, 21
211/00140/00 ..... 53
9001425 ..... 55
9001659 ..... 55

Speed Detector
210/00074/00 ..... 23, 25
210/00075/00 ..... 27

Standoff
211/00147/00 ..... 77
9001429 ..... 79

Steam Hose
9001471 ..... 95

Steam Injector
9001118 ..... 95

Steam Inlet
9001107 ..... 95

Steam Kit
808P3 ..... 95

Steam Valve
F380787P ..... 95

Steam Valve Harness
F605220 ..... 95

Supply Deflector
F200047800 ..... 91

Supply Dispenser Assembly
F0637838-00 ..... 89

Supply Dispenser Cover Assembly
F0637833-00 ..... 89

Supply Dispenser Cup
F150368 ..... 89
F150369 ..... 89

Supply Dispenser Hose
F0200236-01 ..... 37

Supply Dispenser Lid Latch
F432223 ..... 89

Supply Dispenser Mounting Bracket
F0609664-00 ..... 89
F0637866-00 ..... 89

Supply Dispenser Weldment
F0637862-00 ..... 89

Supply Hose
F200171 ..... 37

Support
B12418401 ..... 15, 17
B12455301 ..... 17
B12455401 ..... 17

Support Bracket
B12456101 ..... 71
B12456201 ..... 71

info@zipnasklade.ru
8(800)500-69-51

N/A items do not appear in index.


© Copyright, Alliance Laundry Systems LLC – DO NOT COPY or TRANSMIT

111/00207/11 ..... 69
Support Connector
9001960 ..... 61
Suspension Spring
B12440101 ..... 13
B12456301 ..... 13, 15, 17
Switch Base
9001356 ..... 53, 55
Switch Knob
9002072 ..... 55
Switch Lever
9001479 ..... 43

## T

Tee
223/00369/00 ..... 37
Terminal Block
9001354 ..... 79
Thermostat
210/01064/16 ..... 57
9001669 ..... 59, 61
Thermostat Seal
9001564 ..... 57, 59, 61
Threaded Rod
B12511601 ..... 15, 17
Tilt Detector Plate
B12485001 ..... 87
Tilt Switch Bracket
9001041 ..... 87
Top Panel
111/10304/00 ..... 73
9001067 ..... 75
9001145 ..... 75
T-Piece
253/00006/00 ..... 41
Transformer
9001986 ..... 81, 83
Trim
211/00143/00 ..... 53
Tub
B12330101 ..... 19, 21
B12330201 ..... 19, 21
B12330301 ..... 19, 21
B12330501 ..... 19, 21
B12330601 ..... 19, 21
119/00213/11 ..... 19, 21, 37
9001124 ..... 19, 21
Tub Clamp Ring
9001603 ..... 19, 21
Tub Front
9001139 ..... 19, 21
Tub Front Mounting Strap
115/00161/00 ..... 19, 21
Tub Front Panel Clip
9001464 ..... 19, 21
Tub Front Panel Gasket
223/00242/30 ..... 19, 21
Tub Front Ring Clamp
9001598 ..... 19, 21
Tub Mount Rings Bracket
115/00125/00 ..... 19, 21
Tub Mounting Strap
9001138 ..... 19, 21
Tub Strap
9001132 ..... 19, 21
Tub Support
9001016 ..... 11
9001025 ..... 9
Tub Tightening Ring
115/00162/00 ..... 19, 21
115/00163/00 ..... 19, 21

## V

Valve, 3-Way
F0381737-00 ..... 77
V-Belt
9001575 ..... 31
Vent Hose
9001521 ..... 91
Voltage Discharge Decal
B12355001 ..... 81, 83

## W

Warning Label
44127701 ..... 37
Washer
B12421401 ..... 69
B12522101 ..... 19
F430322 ..... 89
F431105 ..... 89
F431106 ..... 89
F431123 ..... 53
F431133 ..... 89
F431137 ..... 89
F431147 ..... 37, 89
M400080 ..... 37
201/00202/00 ..... 27
20290 ..... 79
202/00101/00 ..... 37
202/00111/00 ..... 45, 47, 49
202/00124/00 ..... 43
803615 ..... 79
9001208 ..... 15, 17, 21, 23, 25, 27, 35
9001209 ..... 33, 79
9001211 ..... 33, 35
9001213 ..... 43, 67, 69, 71
9001214 ..... 19, 21
9001216 ..... 15, 17, 19, 21, 63, 65, 67, 69, 71, 87
9001217 ..... 29, 31
9001221 ..... 43
9001222 ..... 43
9001223 ..... 13
9001225 ..... 23, 25
9001227 ..... 39, 41
9001229 ..... 63, 65, 71, 79, 81, 85
9001230 ..... 43, 45, 47, 49, 59, 87
9001232 ..... 45, 47, 49
9001233 ..... 19, 21
9001236 ..... 63, 65, 67, 69, 71
9001238 ..... 29, 31
9001239 ..... 35
9001240 ..... 27, 39, 41, 87
9001241 ..... 23, 25, 39, 41, 57, 63, 65, 67, 69, 71

N/A items do not appear in index.

info@ziphaskiade.ru
8(800)500-69-51


© Copyright, Alliance Laundry Systems LLC – DO NOT COPY or TRANSMIT

9001242 ..... 81, 83
9001243 ..... 35, 63, 65, 79, 81, 83, 85, 87
9001244 ..... 43, 55
9001245 ..... 45, 47, 49
9001523 ..... 53, 55

Water Hose
F200107P ..... 77
F200164 ..... 79
F200166 ..... 79
223/00059/00 ..... 77
9001498 ..... 77, 79
9001499 ..... 91
9001500 ..... 79, 91

Water Level Switch
209/00029/00 ..... 61

Water Valve Adapter
223/00050/01 ..... 79

info@zipnasklade.ru
8(800)500-69-51

N/A items do not appear in index.


© Copyright, Alliance Laundry Systems LLC – DO NOT COPY or TRANSMIT