Washer-Extractor

Cabinet Freestanding

Refer to Page 5 for Model Numbers

Parts

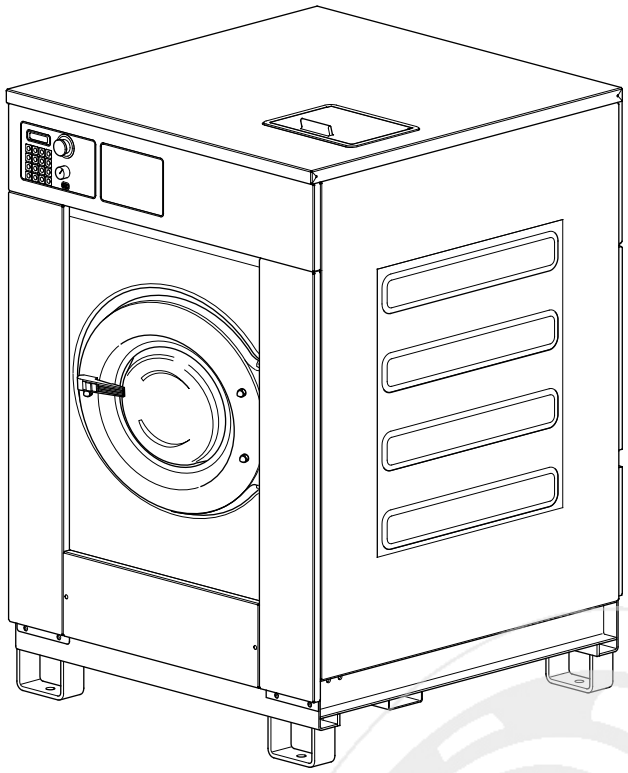

CFD8C_9001005

info@zipnasklade.ru
8(800)500-69-51

Alliance Laundry Systems

www.alliancelaundry.com

Part No. 9001005R21
February 2014

info@zipnasklade.ru
8(800)500-69-51

Table of Contents

Title	Page
Parts Ordering Information	3
Nameplate Location	3
Model Identification	5
Cabinet Freestanding Washer-Extractor Product Overview	6
Frame - 55 Pound Models	8
Frame - 75 Pound Models	10
Shock and Spring Assembly - 55 Pound Models Through 6/20/11 and 75 Pound Models Through 11/13/11	12
Shock and Spring Assembly - 55 Pound Models Starting 6/21/11	14
Shock and Spring Assembly - 75 Pound Models Starting 11/14/11	16
Shell, Basket and Front Panel - Design 6 Models	18
Shell, Basket and Front Panel - Design 7 Models	20
Bearing Assembly - 55 Pound Models Through 1/30/11	22
Bearing Assembly - 55 Pound Models Starting 1/31/11	24
Bearing Assembly - 75 Pound Models	26
Basket, Pulley and Belt - 55 Pound Models	28
Basket, Pulley and Belt - 75 Pound Models	30
Motor - 55 Pound Models	32
Motor - 75 Pound Models	34
Drain Assembly	36
Single Drain Assembly	38
Dual Drain Assembly	40
Door Lock	42
Door - Design 6 Models	44
Door - Design 7 Models Through 9/30/07	46
Door - Design 7 Models Starting 10/1/07	48
Door Handle	50
Control Panel - Models UX055PVXF7, UX55PVXF6 and UX55PVXF7	52
Control Panel - All Models Except UX055PVXF7, UX55PVXF6 and UX55PVXF7	54
Control Module Through February 2006 - 55 Pound Models	56
Control Module Through February 2006 - 75 Pound Models	58
Control Module Starting March 2006	60
Front, Left Side and Upper Back Panels - 55 Pound Models Except Models UX055PVXF7, UX55PVXF6 and UX55PVXF7	62
Front, Left Side and Upper Back Panels - Models UX055PVXF7, UX55PVXF6 and UX55PVXF7	64
Front, Left Side and Upper Back Panels - 75 Pound Models Through 9/30/08	66
Front, Left Side and Upper Back Panels - 75 Pound Models Starting 10/1/08 Through 11/13/11	68
Front, Left Side and Upper Back Panels - 75 Pound Models Starting 11/14/11	70
Top, Right Side and Lower Back Panels - Models UX055PVXF7, UX55PVXF6 and UX55PVXF7	72
Top, Right Side and Lower Back Panels - All Models Except UX055PVXF7, UX55PVXF6 and UX55PVXF7	74
Fill Plumbing - Models UX055PVXF7, UX55PVXF6 and UX55PVXF7	76
Fill Plumbing - All Models Except UX055PVXF7, UX55PVXF6 and UX55PVXF7	78

info@zipnasklade.ru
8(800)500-69-51

© Copyright 2014, Alliance Laundry Systems LLC

All rights reserved. No part of the contents of this book may be reproduced or transmitted in any form or by any means without the expressed written consent of the publisher.

Upper Back Panel - 55 Pound Models 80
Upper Back Panel - 75 Pound Models 82
Upper Back Panel - 55 Pound Models Starting Serial No. 0605755253 and 75 Pound Models Starting Serial No. 060775059 84
Balance Switch 86
Supply Dispenser - Models UX055PVXF7, UX55PVXF6 and UX55PVXF7 88
Supply Dispenser - All Models Except UX055PVXF7, UX55PVXF6 and UX55PVXF7 90
Electric Heating Option 92
Steam Heating Option 94
Parts Index 97

info@zipnasklade.ru
8(800)500-69-51

© Copyright, Alliance Laundry Systems LLC – DO NOT COPY or TRANSMIT

Parts Ordering Information

If literature or replacement parts are required, contact the source from whom the machine was purchased or contact Alliance Laundry Systems at (920) 748-3950 for the name and address of the nearest authorized parts distributor.

For technical assistance, call either of the numbers listed below:

(920) 748-3121 Ripon, Wisconsin

+32 56 41 20 54 Wevelgem, Belgium

Nameplate Location

When calling or writing about your product, be sure to mention model and serial numbers. Model and serial numbers are located on nameplate(s).

info@zipnasklade.ru
8(800)500-69-51

© Copyright, Alliance Laundry Systems LLC – DO NOT COPY or TRANSMIT

Notes

info@zipnasklade.ru
8(800)500-69-51

© Copyright, Alliance Laundry Systems LLC – DO NOT COPY or TRANSMIT

Model Identification

Information in this manual is applicable to these washer-extractor models:

HX055PVNU7
HX055PVQU7
HX055PVXU7
HX075PVNU7
HX075PVPU7
HX075PVQU7
HX55PVNU6
HX55PVNU7
HX55PVQU6
HX55PVQU7
HX55PVXU6
HX55PVXU7
HX75PVNU6
HX75PVNU7
HX75PVPU7
HX75PVQU6
HX75PVQU7

SX055PVNU7
SX055PVPU7
SX055PVQU7
SX055PVXU7
SX075PVNU7
SX075PVPU7
SX075PVQU7
SX55PVNU6
SX55PVNU7
SX55PVPU6
SX55PVPU7
SX55PVQU6
SX55PVQU7
SX55PVXU6
SX55PVXU7
SX75PVNU6
SX75PVNU7
SX75PVPU7
SX75PVQU6
SX75PVQU7

UX055PVNU7
UX055PVPU7
UX055PVQU7
UX055PVXF7
UX055PVXU7
UX075PVNU7
UX075PVPU7
UX075PVQU7
UX55PVNU6
UX55PVNU7
UX55PVPU6
UX55PVPU7
UX55PVQU6
UX55PVQU7
UX55PVXF6
UX55PVXF7
UX55PVXU6
UX55PVXU7
UX75PVNU6
UX75PVNU7
UX75PVPU6
UX75PVPU7
UX75PVQU6
UX75PVQU7

info@zipnasklade.ru
8(800)500-69-51

© Copyright, Alliance Laundry Systems LLC – DO NOT COPY or TRANSMIT

Cabinet Freestanding Washer-Extractor Product Overview

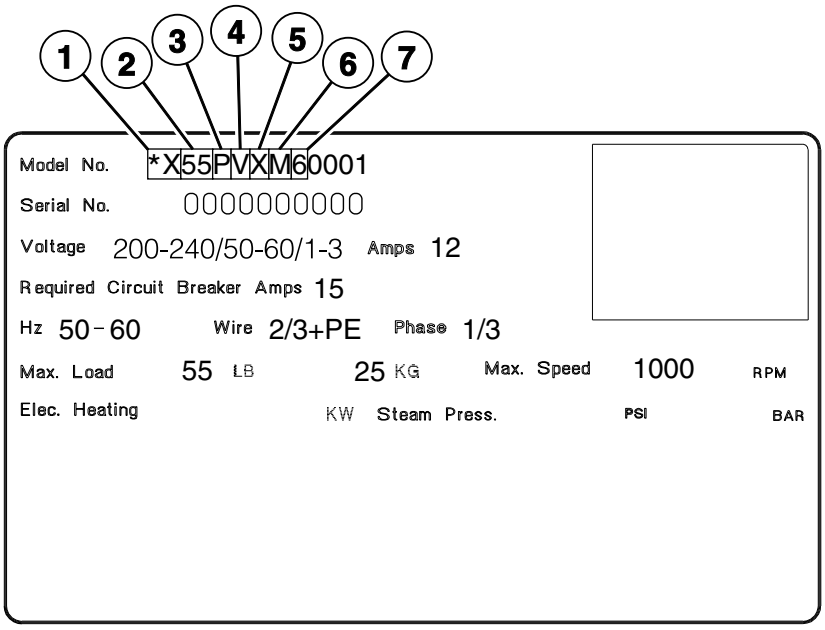

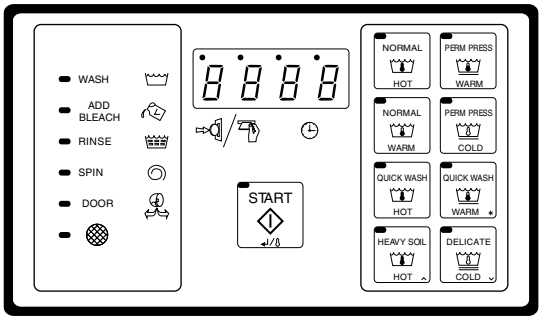

B Computer (Domestic)

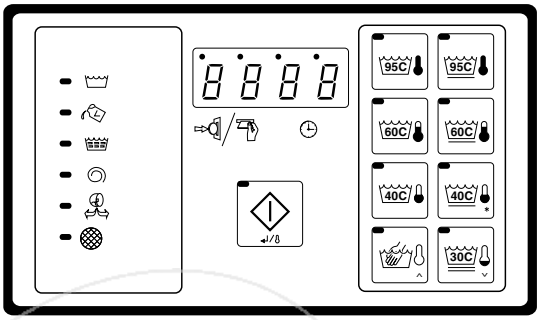

B Computer (International)

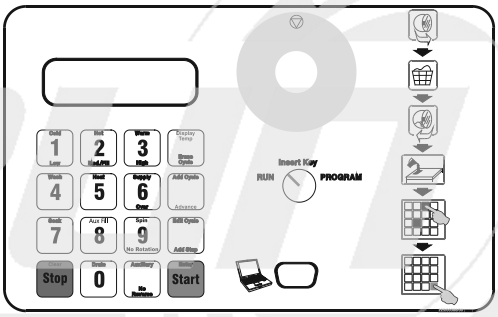

WE-8 Micro

CFD266P_9001005

info@zipnasklade.ru
8(800)500-69-51

© Copyright, Alliance Laundry Systems LLC – DO NOT COPY or TRANSMIT

Cabinet Freestanding Washer-Extractor Product Overview

REF	PART NO.	DESCRIPTION	COMMENTS
1	-	Product Family	HX NX SX UX
2	-	Capacity (Pounds)	18 25 30 35 55 or 055 75 or 075 100 135 165
3	-	Control	B (B Computer) P (WE-8 Micro)
4	-	Speed	V (Variable)
5	-	Voltage	N (440-480/50-60/3/3) P (380-415/50-60/3/3) Q (200-240/50-60/3/3) X (200-240/50-60/1/3)
6	-	OEM	A F M U
7	-	Design	6 and 7

info@zipnasklade.ru
8(800)500-69-51

© Copyright, Alliance Laundry Systems LLC – DO NOT COPY or TRANSMIT

Frame - 55 Pound Models

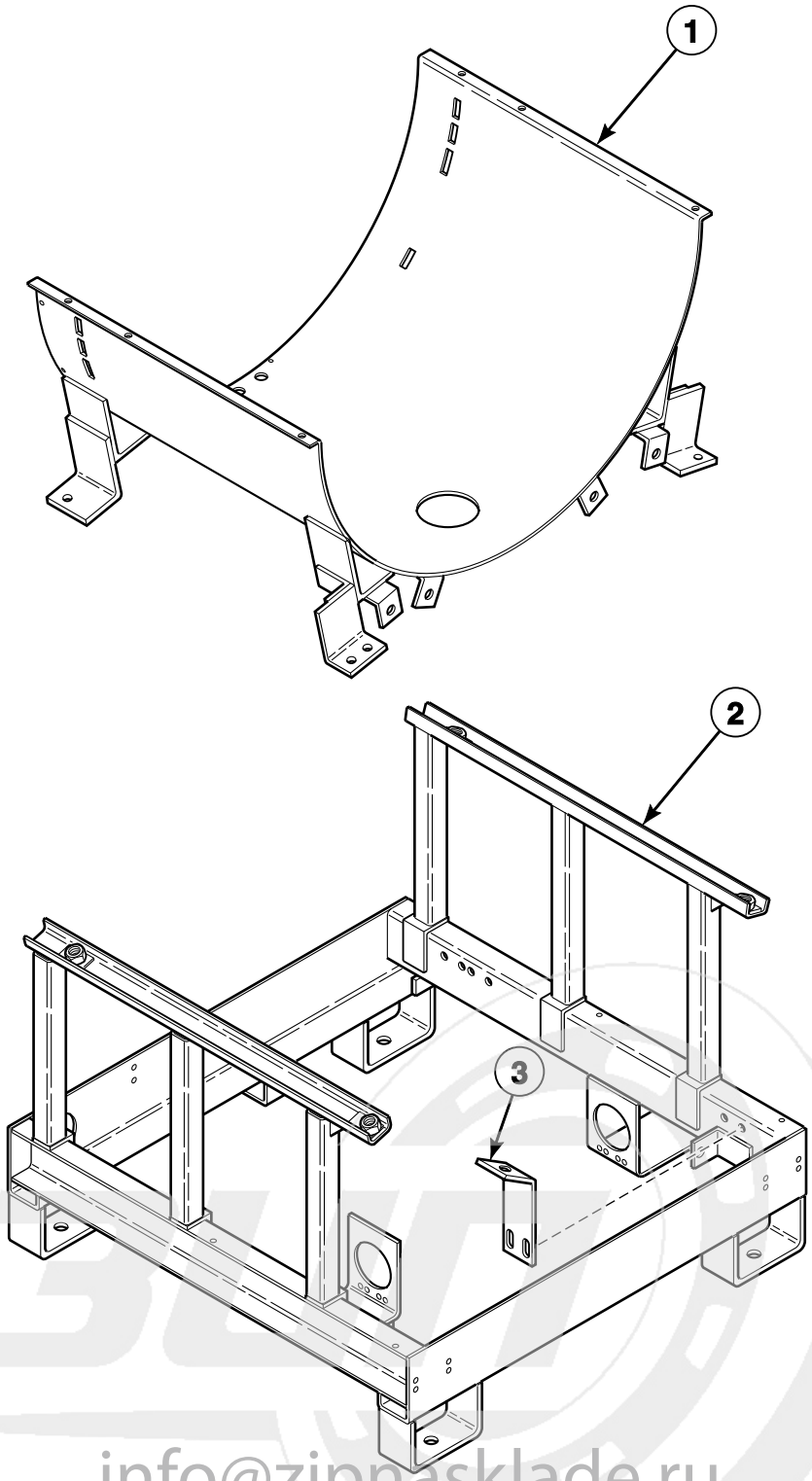

CFD110P_9001005

info@zipnasklade.ru
8(800)500-69-51

© Copyright, Alliance Laundry Systems LLC – DO NOT COPY or TRANSMIT

Frame - 55 Pound Models

REF	PART NO.	DESCRIPTION	COMMENTS
1	9001025	Tub Support	
2	9001101	Frame	
3	9001771	Shipping Brace	

info@zipnasklade.ru
8(800)500-69-51

© Copyright, Alliance Laundry Systems LLC – DO NOT COPY or TRANSMIT

Frame - 75 Pound Models

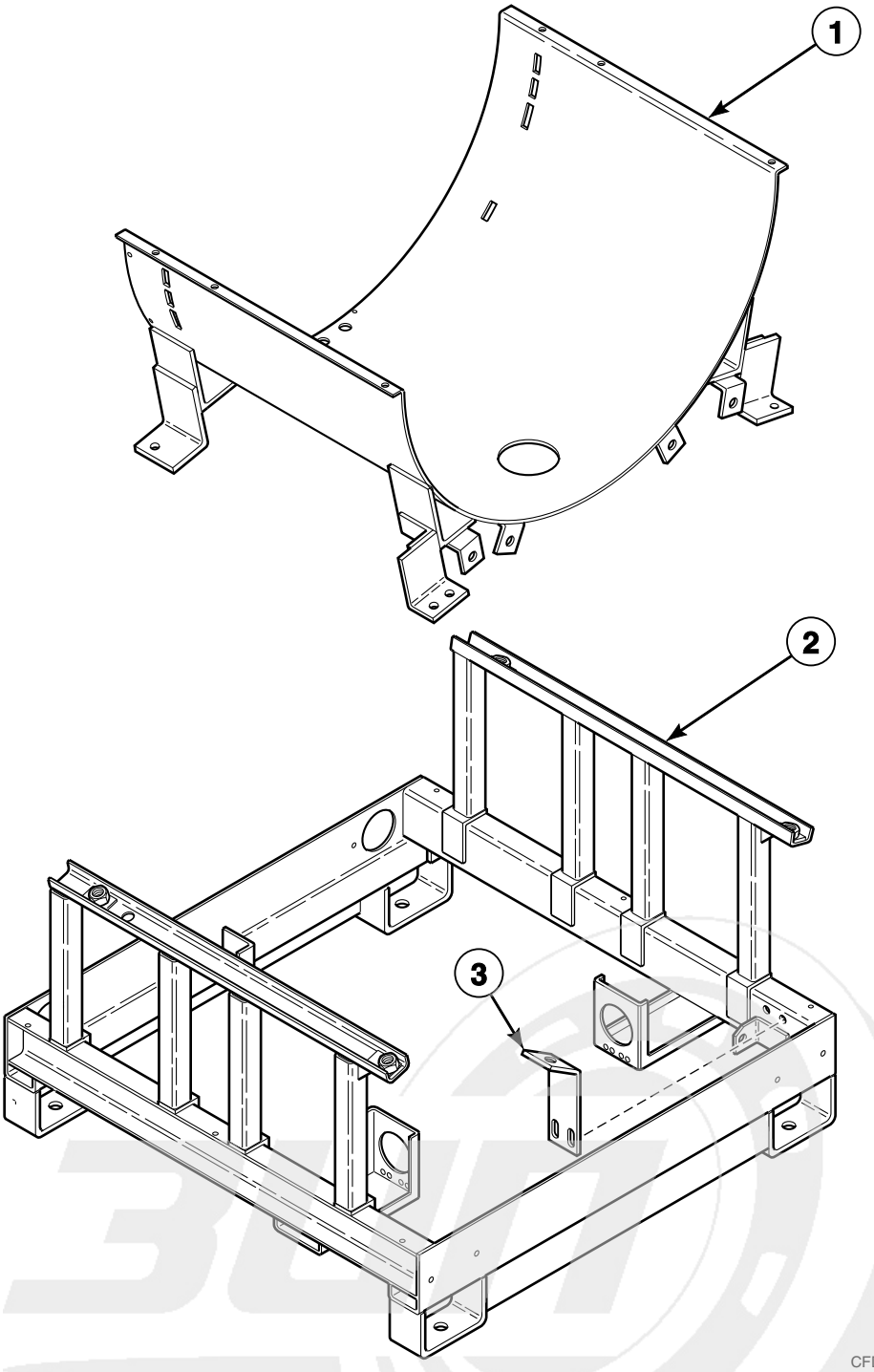

CFD111P_9001005

info@zipnasklade.ru
8(800)500-69-51

© Copyright, Alliance Laundry Systems LLC – DO NOT COPY or TRANSMIT

Frame - 75 Pound Models

REF	PART NO.	DESCRIPTION	COMMENTS
1	9001016	Tub Support	
2	9001100	Frame	
3	9001772	Shipping Brace	

info@zipnasklade.ru
8(800)500-69-51

© Copyright, Alliance Laundry Systems LLC – DO NOT COPY or TRANSMIT

Shock and Spring Assembly - 55 Pound Models Through 6/20/11 and 75 Pound Models Through 11/13/11

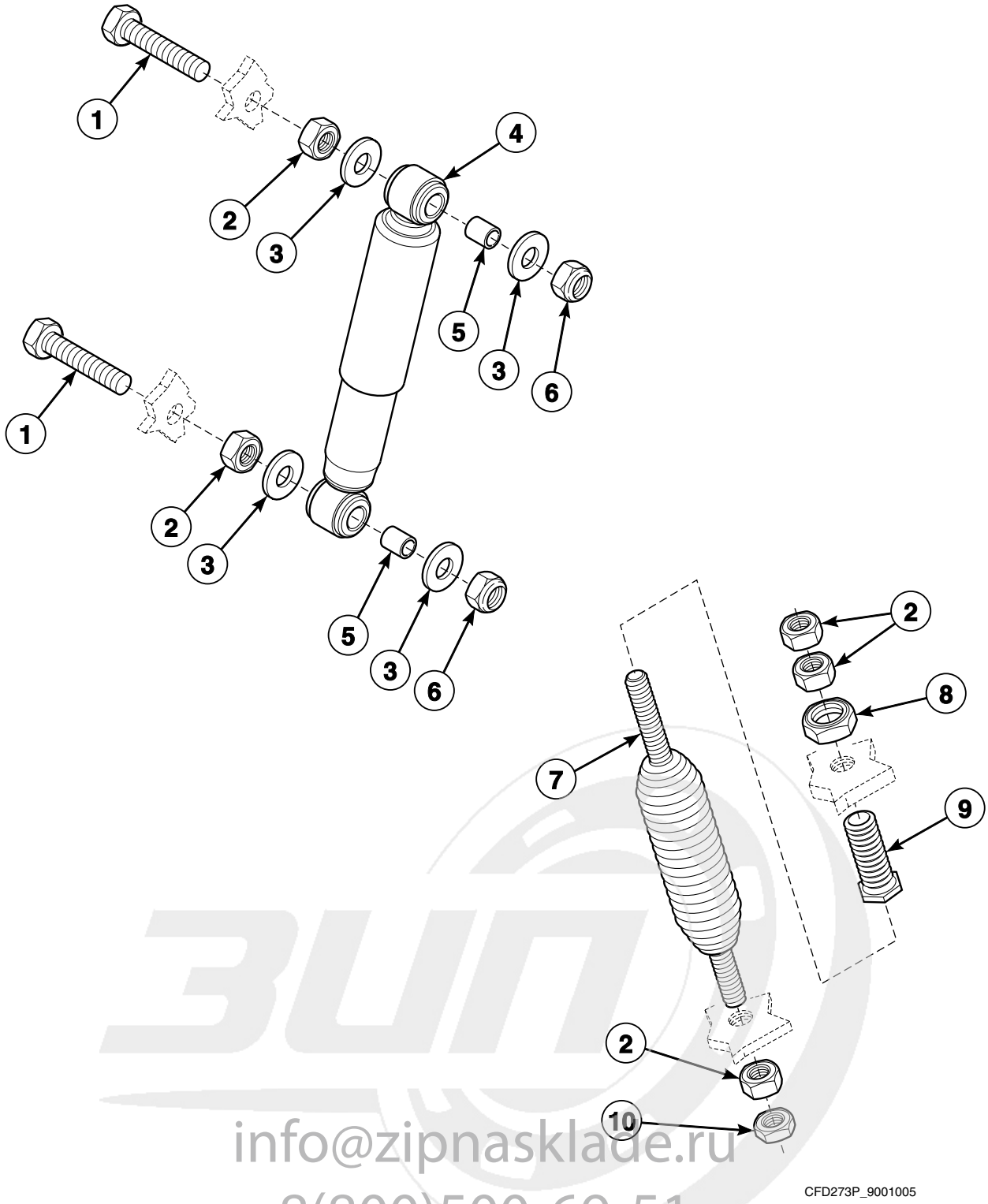

info@zipnasklade.ru
8(800)500-69-51

© Copyright, Alliance Laundry Systems LLC – DO NOT COPY or TRANSMIT

Shock and Spring Assembly - 55 Pound Models Through 6/20/11 and 75 Pound Models Through 11/13/11

REF	PART NO.	DESCRIPTION	COMMENTS
	B12419101	Shock Absorber Service Kit	55 pound models; Used to convert to the dual shock absorber configuration
	B12460901	Shock Absorber Service Kit	75 pound models; Used to convert to the dual shock absorber configuration
1	206/00153/00	Bolt	
2	9001255	Nut	
3	9001223	Washer	
4	9001617	Shock Absorber	Includes 2 of item 5
5	211/00137/10	Shock Absorber Bushing	
6	9001266	Nut	
7	B12456301	Suspension Spring	55 pound models
	B12440101	Suspension Spring	75 pound models
8	9001256	Nut	
9	9001557	Bolt	
10	9001257	Nut	

info@zipnasklade.ru
8(800)500-69-51

© Copyright, Alliance Laundry Systems LLC – DO NOT COPY or TRANSMIT

Shock and Spring Assembly - 55 Pound Models Starting 6/21/11

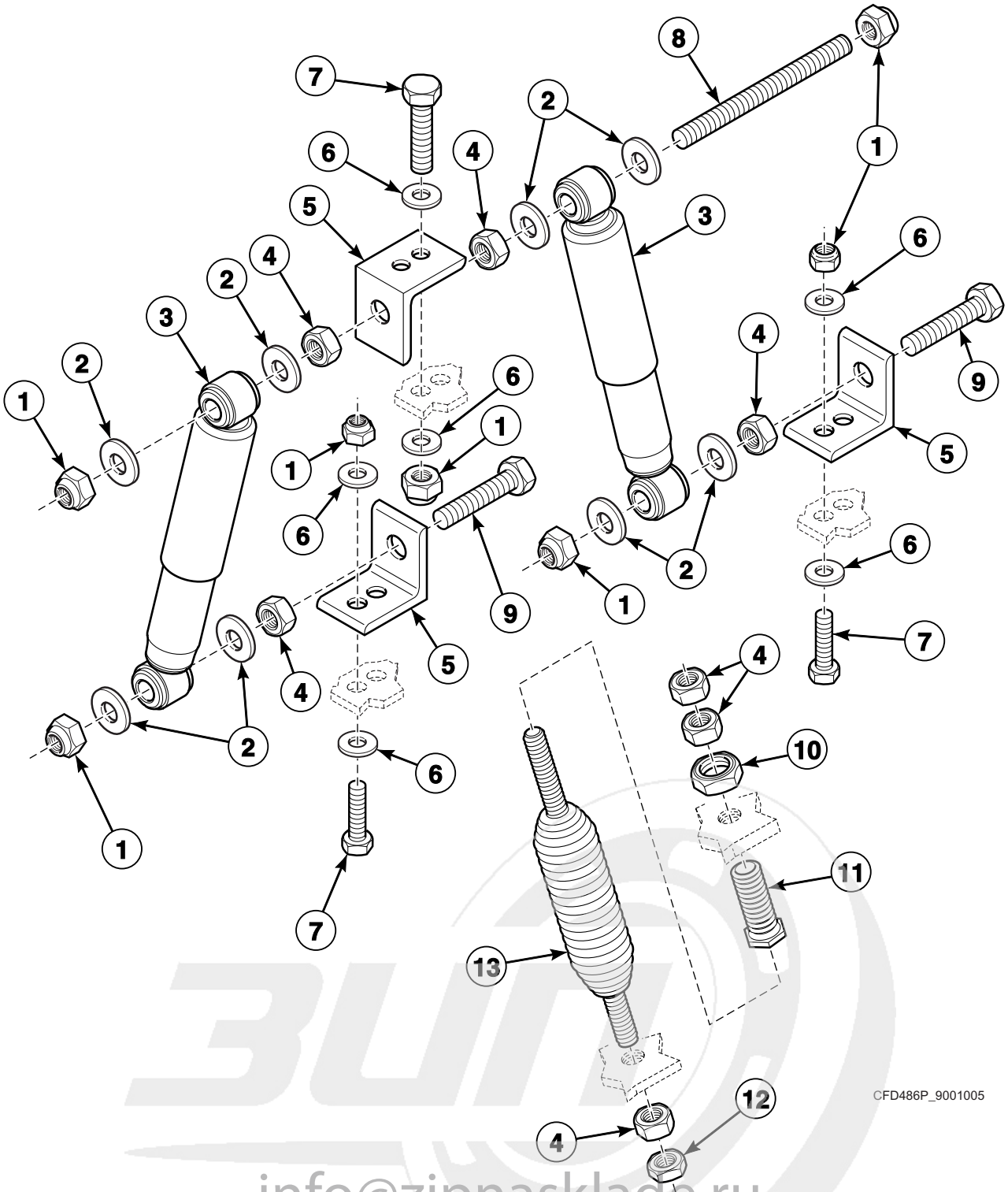

info@zipnasklade.ru
8(800)500-69-51

© Copyright, Alliance Laundry Systems LLC – DO NOT COPY or TRANSMIT

Shock and Spring Assembly - 55 Pound Models Starting 6/21/11

REF	PART NO.	DESCRIPTION	COMMENTS
	B12419101	Shock Absorber Service Kit	Includes items 1-6, 8, 9, 206/00119/00 Bolt, 204/00110/00 Nut, 111/10101/00 Dispenser Front Mounting Plate, 111/10102/00 Dispenser Rear Mounting Plate, 206/00027/00 Bolt, 202/00004/00 Washer, 204/00114/00 Nut, B12419501 Small Caliber and B12419401 Large Caliber
1	9001266	Nut	
2	9001208	Washer	
3	9001617P	Shock Absorber	
4	9001255	Nut	
5	B12418401	Support	
6	9001216	Washer	
7	206/00087/00	Bolt	
8	B12511601	Threaded Rod	
9	206/00153/00	Bolt	
10	9001256	Nut	
11	9001557	Bolt	
12	9001257	Nut	
13	B12456301	Suspension Spring	

info@zipnasklade.ru
8(800)500-69-51

© Copyright, Alliance Laundry Systems LLC – DO NOT COPY or TRANSMIT

Shock and Spring Assembly - 75 Pound Models Starting 11/14/11

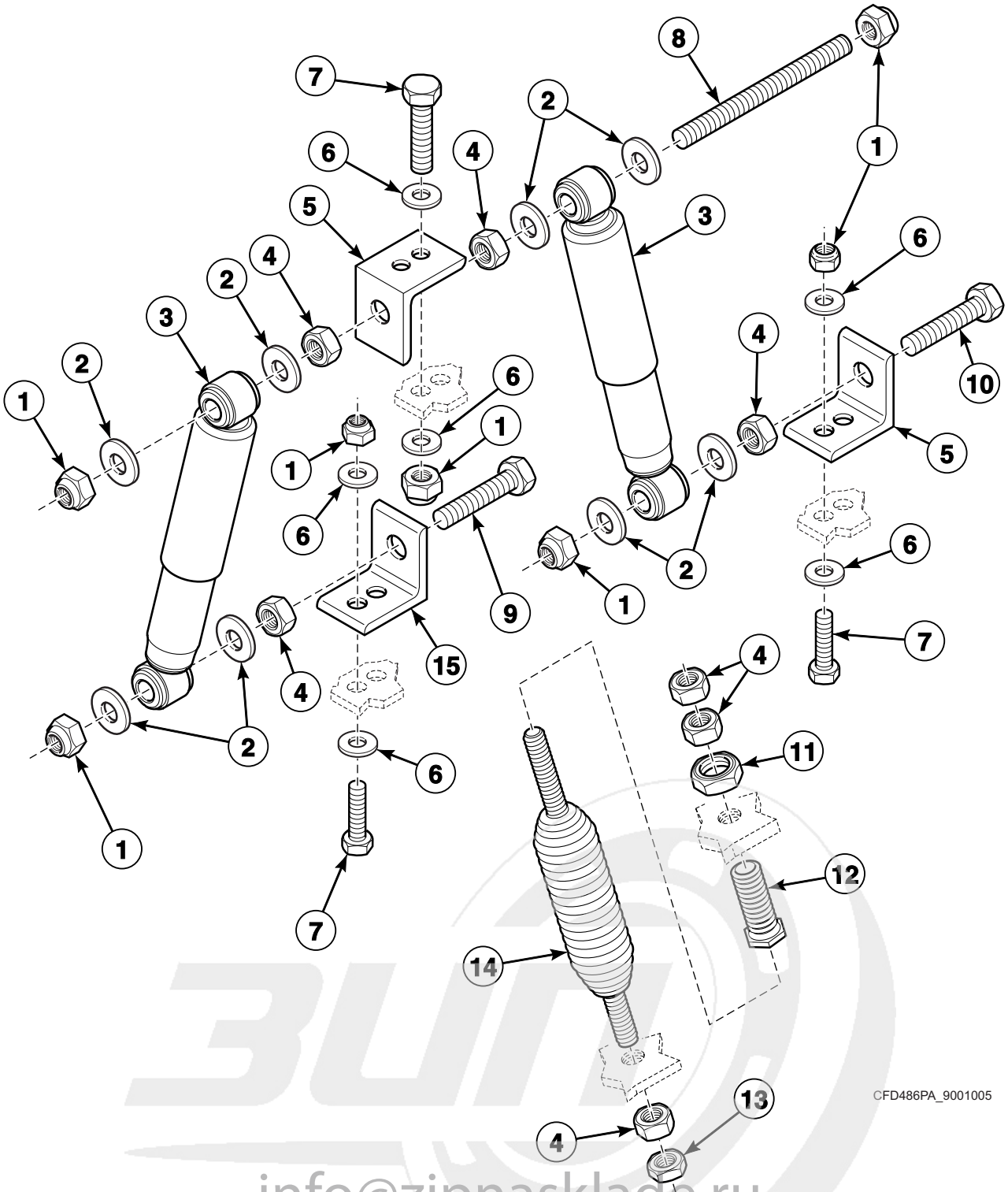

info@zipnasklade.ru
8(800)500-69-51

© Copyright, Alliance Laundry Systems LLC – DO NOT COPY or TRANSMIT

Shock and Spring Assembly - 75 Pound Models Starting 11/14/11

REF	PART NO.	DESCRIPTION	COMMENTS
	B12460901	Shock Absorber Service Kit	Includes items 1-6, 8-10, and 15, 206/00119/00 Bolt, 204/00110/00 Nut, B12459801 Out-of-Balance Frame, B12456101 Support Bracket, B12456201 Support Bracket, 206/00027/00 Bolt, 202/00004/00 Washer, 204/00114/00 Nut, B12463301 Small Caliber and B12463201 Large Caliber
1	9001266	Nut	
2	9001208	Washer	
3	9001617P	Shock Absorber	
4	9001255	Nut	
5	B12455401	Support	
6	9001216	Washer	
7	206/00087/00	Bolt	
8	B12511601	Threaded Rod	
9	206/00153/00	Bolt	
10	B12455301	Support	
11	9001256	Nut	
12	9001557	Bolt	
13	9001257	Nut	
14	B12456301	Suspension Spring	
15	B12418401	Support	

info@zipnasklade.ru
8(800)500-69-51

© Copyright, Alliance Laundry Systems LLC – DO NOT COPY or TRANSMIT

Shell, Basket and Front Panel - Design 6 Models

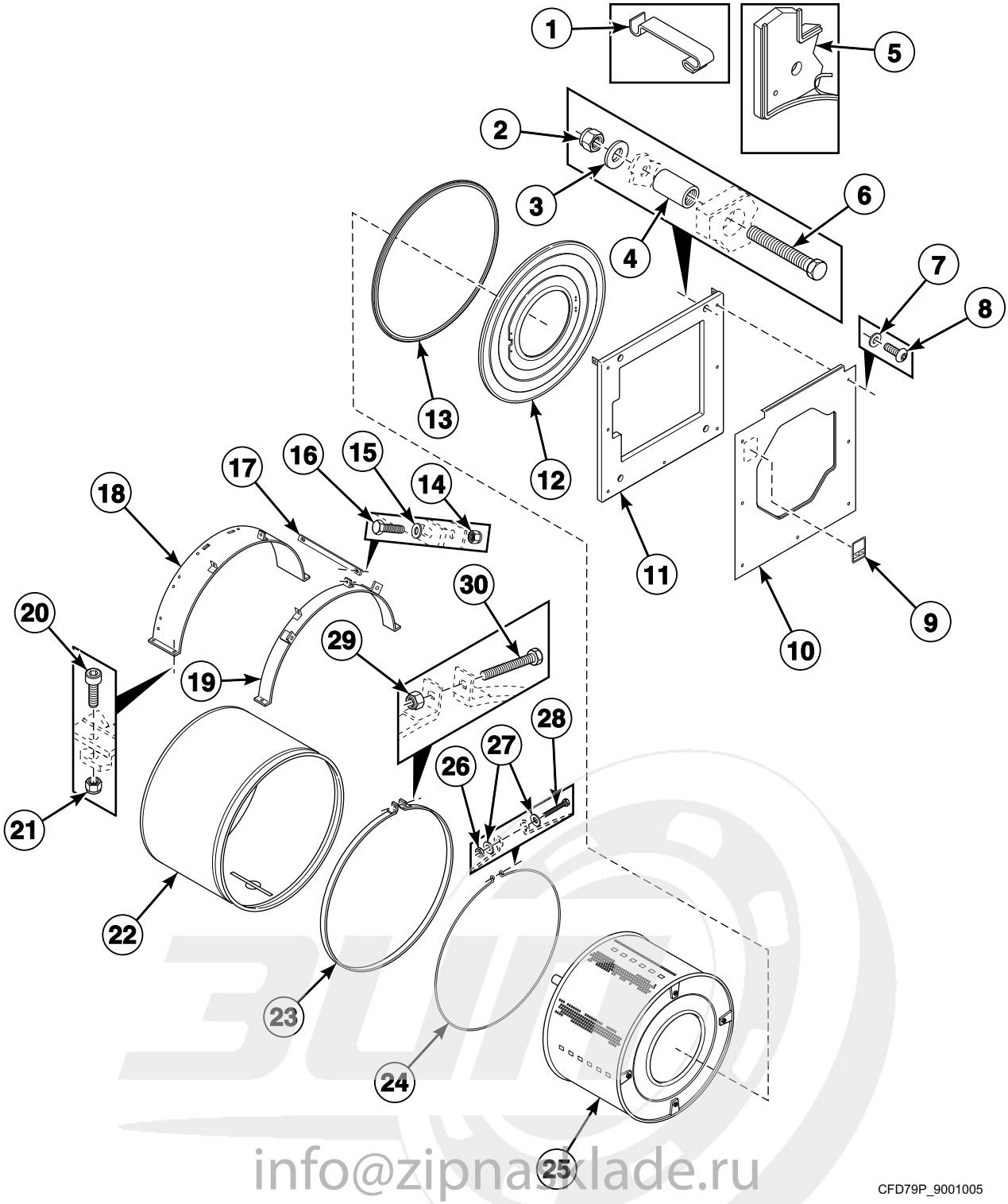

info@zipnaklade.ru
8(800)500-69-51

© Copyright, Alliance Laundry Systems LLC – DO NOT COPY or TRANSMIT

Shell, Basket and Front Panel - Design 6 Models

REF	PART NO.	DESCRIPTION	COMMENTS
1	9001464	Tub Front Panel Clip	
2	9001266	Nut	
3	B12522101	Washer	
4	115/00151/00	Spacer	
5	9001607	Gasket	
6	9001306	Bolt	
7	9001214	Washer	55 pound models
	9001233	Washer	75 pound models
8	9001657	Screw	55 pound models
	9001675	Screw	75 pound models
9	9001741	Door Handle Decal	
10	9001096	Door Front Panel	55 pound models
	9001088	Door Front Panel	75 pound models
11	9001024	Counterweight	55 pound models
	9001023	Counterweight	75 pound models
12	9001139	Tub Front	55 pound models
	9001130	Front Panel	75 pound models
13	223/00242/30	Tub Front Panel Gasket	55 pound models
	223/00242/50	Front Panel Gasket	75 pound models
14	9001262	Nut	
15	9001216	Washer	
16	9001287	Bolt	
17	115/00125/00	Tub Mount Rings Bracket	
18	115/00162/00	Tub Tightening Ring	
19	115/00161/00	Tub Front Mounting Strap	55 pound models
	115/00163/00	Tub Tightening Ring	75 pound models
20	9001313	Screw	
21	9001264	Nut	
22	119/00213/11	Tub	Model UX55PVXF6
	B12330201	Tub	All other 55 pound models; Standard
	B12330101	Tub	All other 55 pound models; Electric heat
	B12330301	Tub	All other 55 pound models; Electric and steam heat
	B12330601	Tub	75 pound models; Standard
	B12330501	Tub	75 pound models; Electric and steam heat
	9001124	Tub	75 pound models; Steam heat
23	9001138	Tub Mounting Strap	55 pound models
	9001132	Tub Strap	75 pound models
24	9001603	Tub Clamp Ring	55 pound models
	9001598	Tub Front Ring Clamp	75 pound models
25	B12327101	Cylinder and Shaft Assembly	55 pound models; Models through 1/30/11
	B12543201	Basket Kit	55 pound models; Models through 1/30/11; Includes B12380901 Basket and 3884P Bearing and Seal Kit
	B12380901	Basket	55 pound models; Models starting 1/31/11; 3 mm
	B12381001	Basket	55 pound models; Models starting 1/31/11; 9 mm
	B12327301	Drum	75 pound models; Models starting Serial No. 10040300103
	B12537901	Basket and Pulley Kit	Models through Serial No. 10040300102; Includes B12327301 Basket, 226/00150/00 Basket Pulley, 206/00056/00 Screw, 226/00152/00 Motor Pulley, 226/00151/00 Belt and 9001445 Key
26	9001254	Nut	
27	9001214	Washer	
28	206/00032/00	Bolt	
29	9001264	Nut	
30	9001305	Bolt	

info@zipnas
8(800)500-69-51

© Copyright, Alliance Laundry Systems LLC – DO NOT COPY or TRANSMIT

Shell, Basket and Front Panel - Design 7 Models

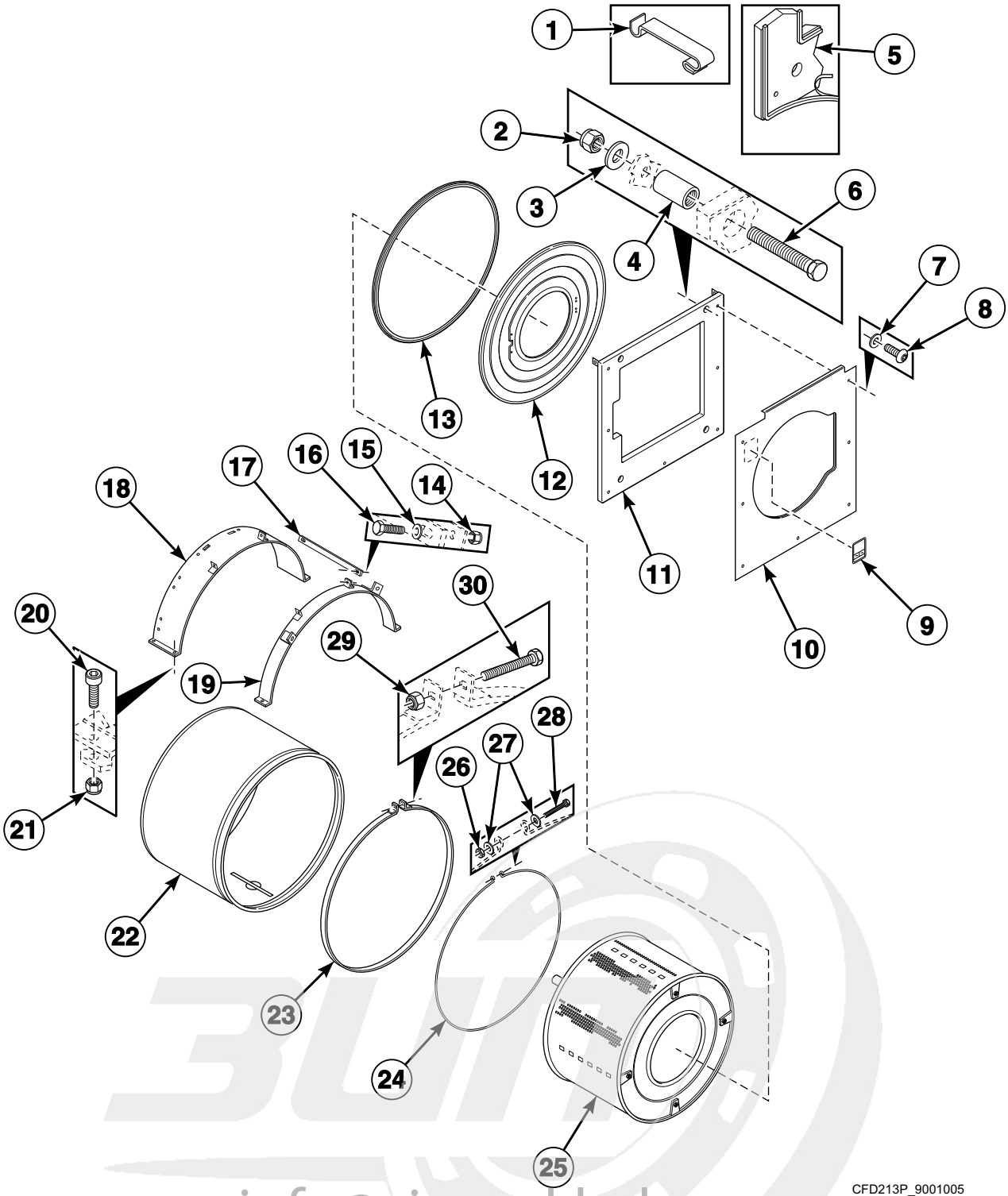

info@zipnasklade.ru
8(800)500-69-51

© Copyright, Alliance Laundry Systems LLC – DO NOT COPY or TRANSMIT

Shell, Basket and Front Panel - Design 7 Models

REF	PART NO.	DESCRIPTION	COMMENTS
1	9001464	Tub Front Panel Clip	
2	9001266	Nut	
3	9001208	Washer	
4	115/00151/00	Spacer	
5	9001607	Gasket	
6	9001306	Bolt	
7	9001214	Washer	55 pound models
	9001233	Washer	75 pound models
8	9001657	Screw	55 pound models
	9001675	Screw	75 pound models
9	9001741	Door Handle Decal	
10	111/05015/00	Door Front Panel	
11	9001024	Counterweight	55 pound models
	9001023	Counterweight	75 pound models
12	9001139	Tub Front	55 pound models
	9001130	Front Panel	75 pound models
13	223/00242/30	Tub Front Panel Gasket	55 pound models
	223/00242/50	Front Panel Gasket	75 pound models
14	9001262	Nut	
15	9001216	Washer	
16	9001287	Bolt	
17	115/00125/00	Tub Mount Rings Bracket	
18	115/00162/00	Tub Tightening Ring	
19	115/00161/00	Tub Front Mounting Strap	55 pound models
	115/00163/00	Tub Tightening Ring	75 pound models
20	9001313	Screw	
21	9001264	Nut	
22	119/00213/11	Tub	Models UX055PVXF7 and UX55PVXF7
	B12330201	Tub	All other 55 pound models; Standard
	B12330101	Tub	All other 55 pound models; Electric heat
	B12330301	Tub	All other 55 pound models; Electric and steam heat
	B12330601	Tub	75 pound models; Standard
	B12330501	Tub	75 pound models; Electric and steam heat
	9001124	Tub	75 pound models; Steam heat
23	9001138	Tub Mounting Strap	55 pound models
	9001132	Tub Strap	75 pound models
24	9001603	Tub Clamp Ring	55 pound models
	9001598	Tub Front Ring Clamp	75 pound models
25	B12327101	Cylinder and Shaft Assembly	55 pound models; Models through 1/30/11
	B12543201	Basket Kit	55 pound models; Models through 1/30/11; Includes B12380901 Basket and 3884P Bearing and Seal Kit
	B12380901	Basket	55 pound models; Models starting 1/31/11; 3 mm
	B12381001	Basket	55 pound models; Models starting 1/31/11; 9 mm
	B12327301	Drum	75 pound models; Models starting Serial No. 10040300103
	B12537901	Basket and Pulley Kit	Models through Serial No. 10040300102; Includes B12327301 Basket, 226/00150/00 Basket Pulley, 206/00056/00 Screw, 226/00152/00 Motor Pulley, 226/00151/00 Belt and 9001445 Key
26	9001254	Nut	
27	9001214	Washer	
28	206/00032/00	Bolt	
29	9001264	Nut	
30	9001305	Bolt	

info@zipnaskaa.ru
8(800)500-69-51

© Copyright, Alliance Laundry Systems LLC – DO NOT COPY or TRANSMIT

Bearing Assembly - 55 Pound Models Through 1/30/11

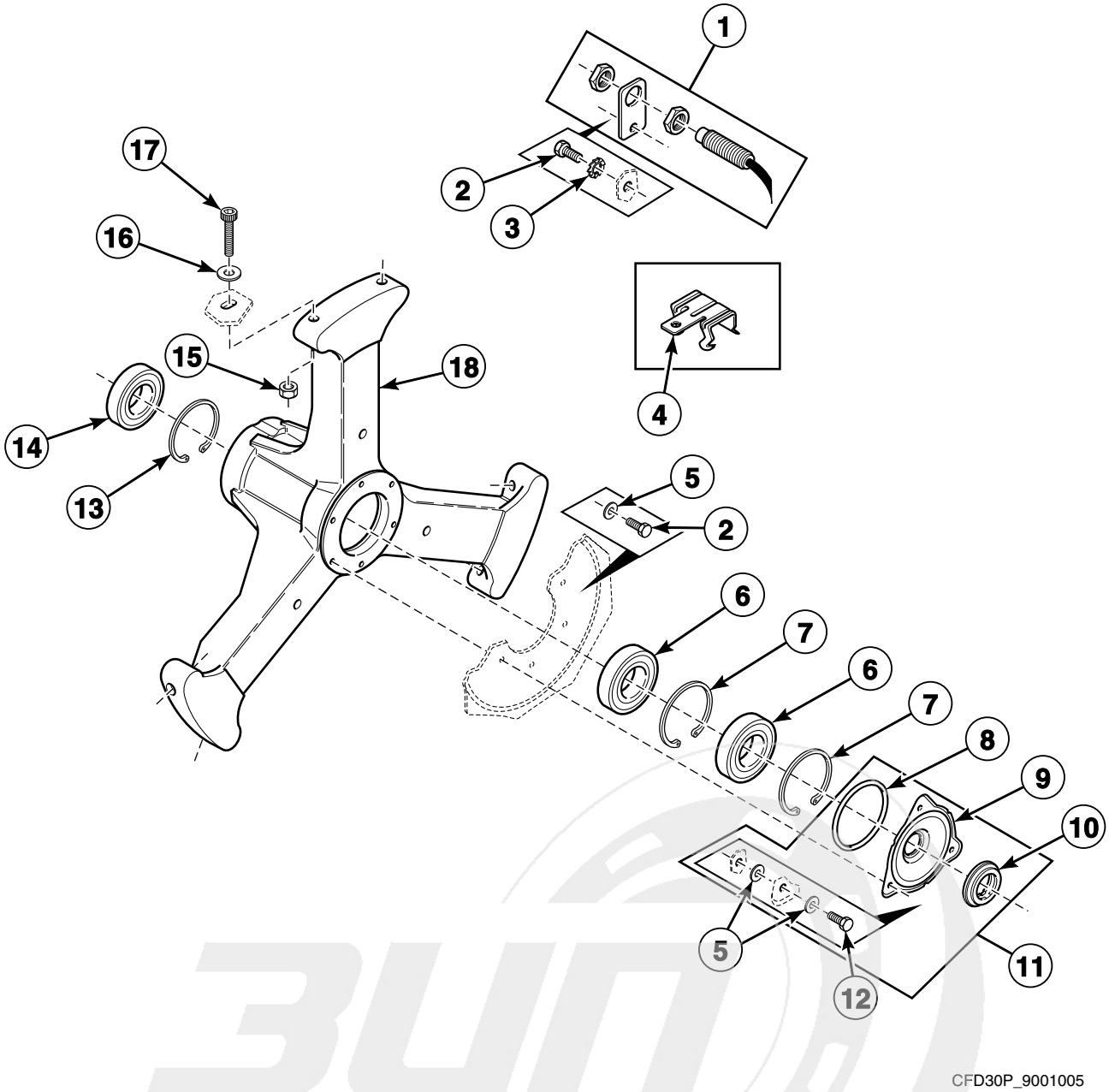

info@zipnasklade.ru
8(800)500-69-51

© Copyright, Alliance Laundry Systems LLC – DO NOT COPY or TRANSMIT

Bearing Assembly - 55 Pound Models Through 1/30/11

REF	PART NO.	DESCRIPTION	COMMENTS
	891P3	Bearing Replacement Kit	Includes items 5, 6, 11, 12, 14, 9001483 Counter Ring and 9001548 Tub Front Gasket
	385P4	Bearing Replacement Tool Kit	
1	210/00074/00	Speed Detector	
2	9001274	Bolt	
3	9001241	Washer	
4	9001559	Caddy Bracket	4H58-4
	9001560	Caddy Bracket	4H912
5	9001225	Washer	
6	9001438	Ball Bearing	
7	9001440	Retainer Ring	
8	9001460	O-Ring	
9	9001116	Seal Plate	
10	9001482	Shaft Seal	
11	9001117	Seal Holder Assembly	
12	9001272	Bolt	
13	9001452	Retainer Ring	
14	212/00024/01	Ball Bearing	
15	9001266	Nut	
16	9001208	Washer	
17	9001697	Screw	
18	139/10006/00	Bearing Housing Assembly	Includes items 6-7 and 13-14

info@zipnasklade.ru
8(800)500-69-51

© Copyright, Alliance Laundry Systems LLC – DO NOT COPY or TRANSMIT

Bearing Assembly - 55 Pound Models Starting 1/31/11

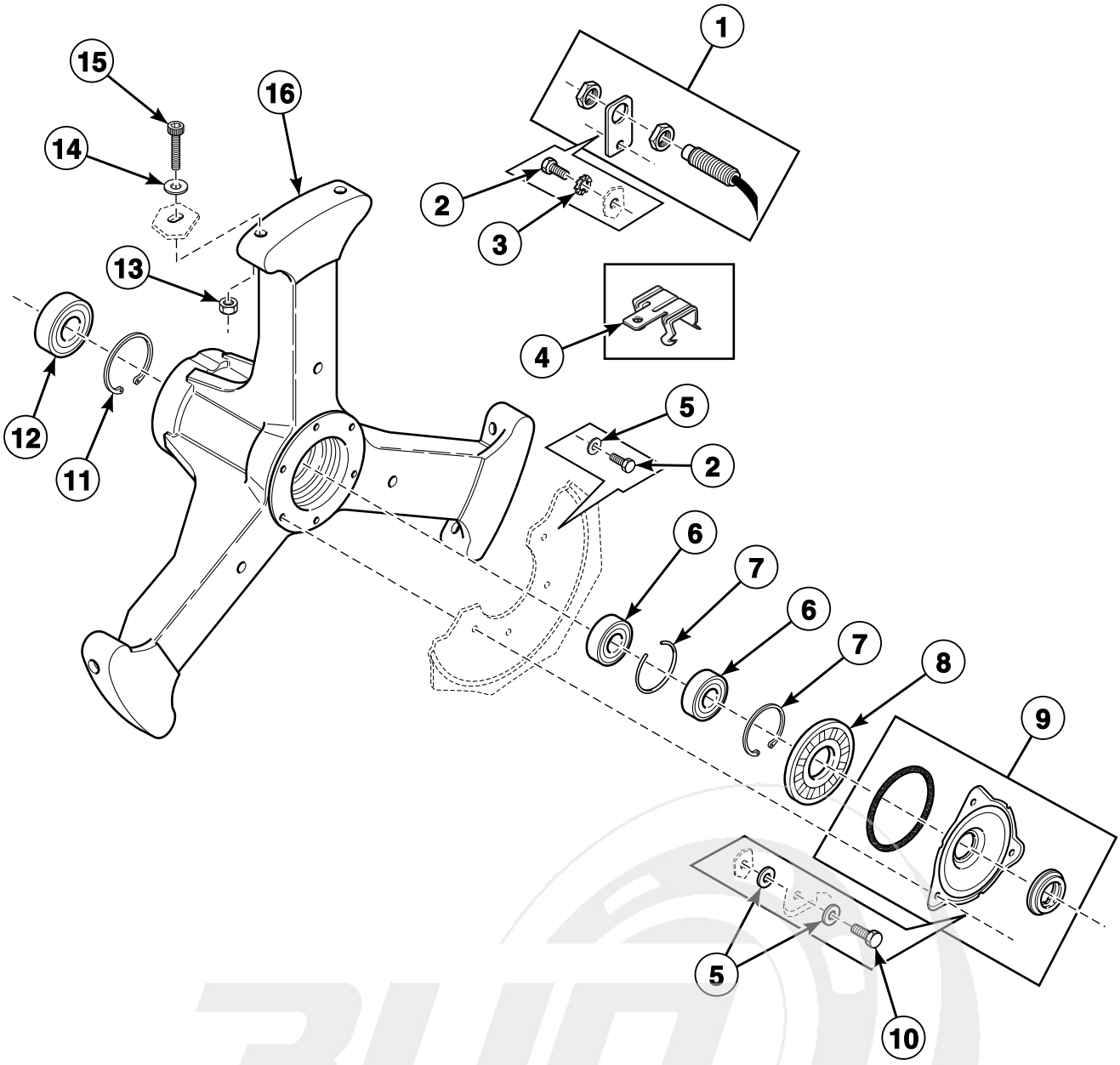

CFD546P_9001005

info@zipnasklade.ru
8(800)500-69-51

© Copyright, Alliance Laundry Systems LLC – DO NOT COPY or TRANSMIT

Bearing Assembly - 55 Pound Models Starting 1/31/11

REF	PART NO.	DESCRIPTION	COMMENTS
	3884P	Bearing and Seal Kit	Includes items 5, 6, 8-10, 12, 9001483 Counter Ring and 223/00242/40 Tub Front Panel Gasket
	381P3	Bearing Replacement Tool Kit	
1	210/00074/00	Speed Detector	
2	9001274	Bolt	
3	9001241	Washer	
4	9001559	Caddy Bracket	4H58-4
	9001560	Caddy Bracket	4H912
5	9001225	Washer	
6	9001438	Ball Bearing	
7	9001440	Retainer Ring	
8	B12332301	Lip Seal	
9	B12333701	Seal Plate Assembly	
10	9001272	Bolt	
11	9001452	Retainer Ring	
12	F100134	Bearing	
13	9001266	Nut	
14	9001208	Washer	
15	9001697	Screw	
16	139/10006/00	Bearing Housing Assembly	Includes items 6, 7, 11 and 12

info@zipnasklade.ru
8(800)500-69-51

© Copyright, Alliance Laundry Systems LLC – DO NOT COPY or TRANSMIT

Bearing Assembly - 75 Pound Models

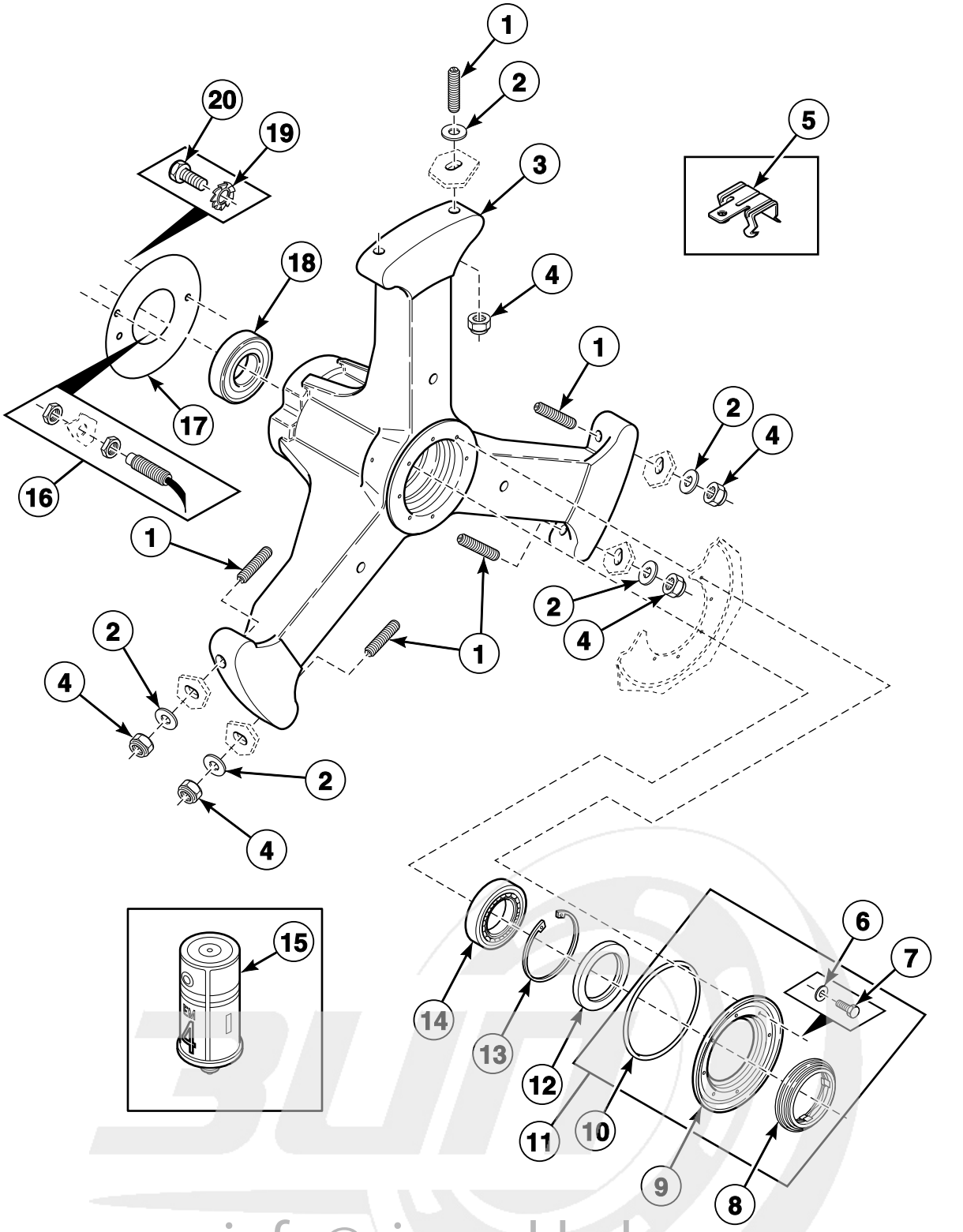

info@zipnasklade.ru
8(800)500-69-51

© Copyright, Alliance Laundry Systems LLC – DO NOT COPY or TRANSMIT

Bearing Assembly - 75 Pound Models

REF	PART NO.	DESCRIPTION	COMMENTS
	892P3	Bearing Replacement Kit	Includes 9001134 Shaft Seal, 9001548 Tub Front Gasket, 9001601 Counterring and items 6, 7, 11, 12, 14, 15 and 18
	385P4	Bearing Replacement Tool Kit	
1	9001697	Screw	
2	9001208	Washer	
3	9001451	Bearing Housing Assembly	Includes items 14 and 18
4	9001266	Nut	
5	9001559	Caddy Bracket	4H58-4
	9001560	Caddy Bracket	4H912
6	201/00202/00	Washer	
7	9001274	Bolt	
8	9001744	Seal Holder Assembly	
9	9001133	Seal Plate	
10	9001599	O-Ring	
11	9001744	Seal Holder Assembly	Includes items 6-10
12	9001441	Grease Ring	
13	9001440	Retainer Ring	
14	9001439	Roller Bearing	
15	212/00002/00	Lubricator	FAG manufactured bearings
16	210/00075/00	Speed Detector	
17	9001097	Bearing Housing Cover	
18	9001438	Ball Bearing	
19	9001240	Washer	
20	9001288	Bolt	

info@zipnasklade.ru
8(800)500-69-51

© Copyright, Alliance Laundry Systems LLC – DO NOT COPY or TRANSMIT

Basket, Pulley and Belt - 55 Pound Models

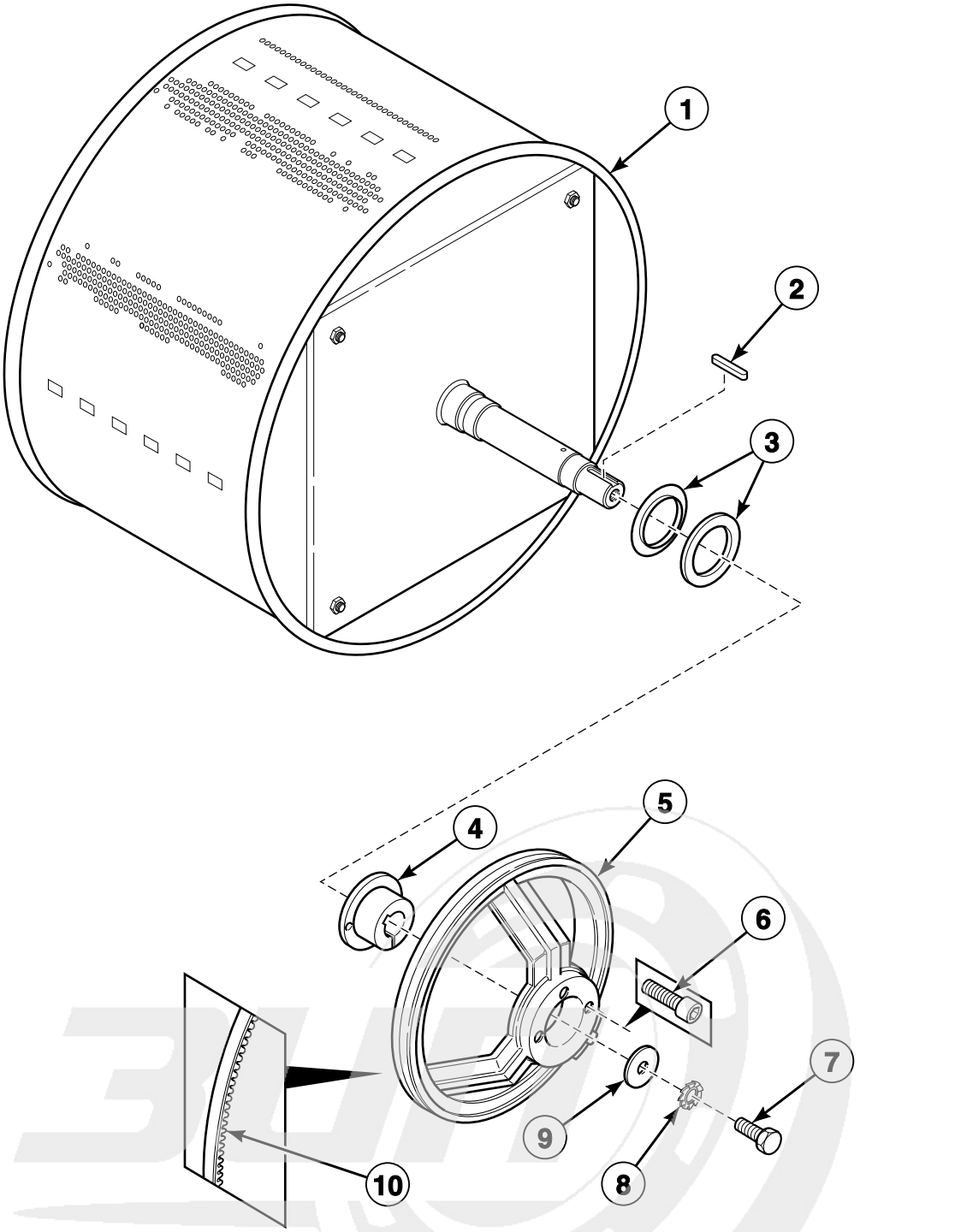

info@zipnasklade.ru
8(800)500-69-51

© Copyright, Alliance Laundry Systems LLC – DO NOT COPY or TRANSMIT

Basket, Pulley and Belt - 55 Pound Models

REF	PART NO.	DESCRIPTION	COMMENTS
1	B12327101	Cylinder and Shaft Assembly	Models through 1/30/11
	B12543201	Basket Kit	Models through 1/30/11; Includes B12380901 Basket and 3884P Bearing and Seal Kit
	B12380901	Basket	Models starting 1/31/11; 3 mm
	B12381001	Basket	Models starting 1/31/11; 9 mm
2	9001445	Key	
3	9001483	Counter Ring	
4	239/00013/00	Pulley	
5	967P3	Pulleys and Belt Kit	Models through Serial No. 08010230051; Includes 185/00086/00 Pulley, 226/00148/00 Pulley and 226/00149/00P Belt; Converts V-belt to flat belt configuration
	226/00148/00	Pulley	Used with serpentine/poly-V belt
6	9001901	Bolt	2 required
7	9001284	Bolt	
8	9001238	Washer	
9	9001217	Washer	
10	9001569	Belt	Models through Serial No. 08010230051; V-belt; 2 required
	226/00149/00	Belt	Models starting Serial No. 08010230052; Serpentine/poly-V; 1 required

info@zipnasklade.ru
8(800)500-69-51

© Copyright, Alliance Laundry Systems LLC – DO NOT COPY or TRANSMIT

Basket, Pulley and Belt - 75 Pound Models

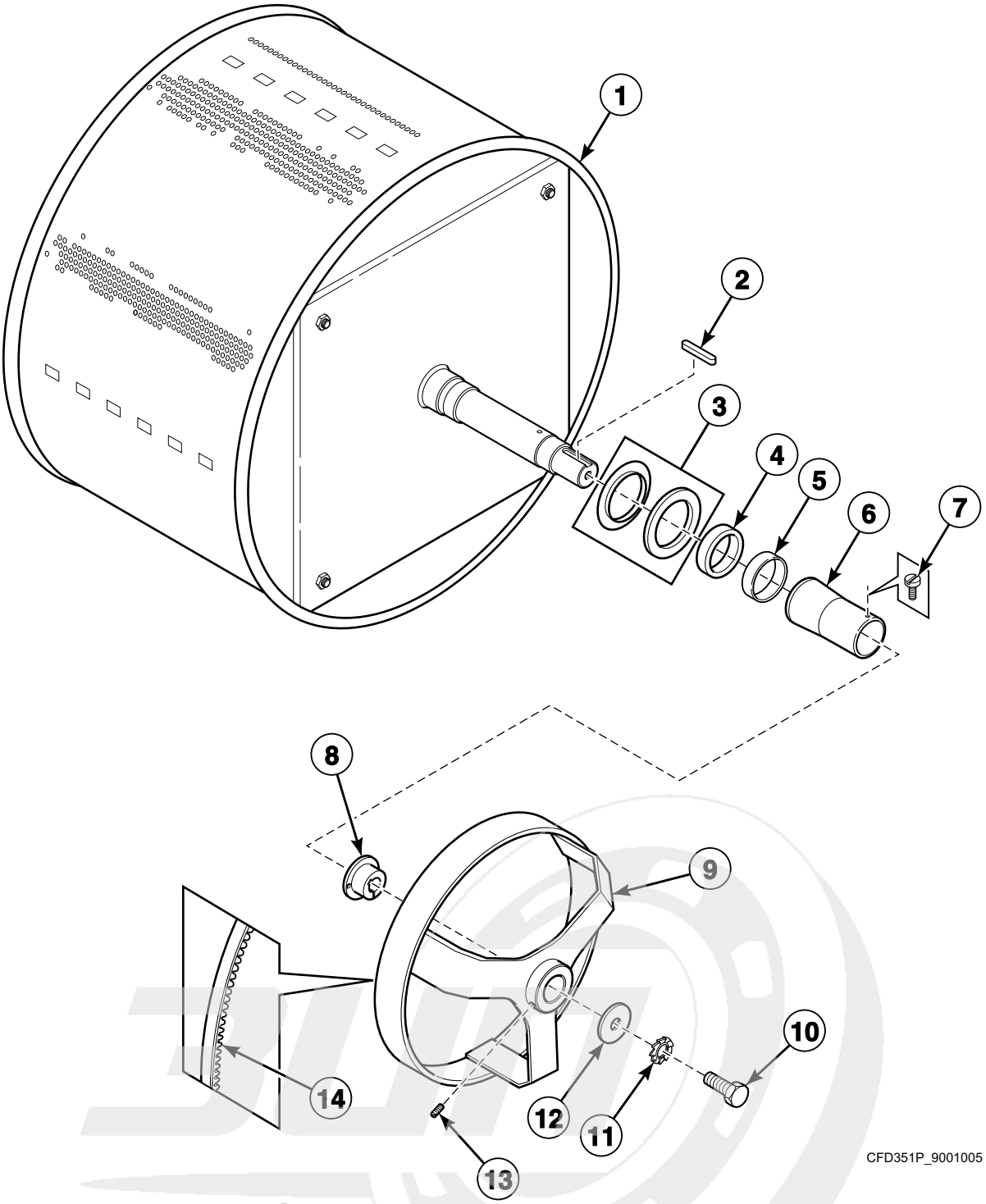

info@zipnasklade.ru
8(800)500-69-51

© Copyright, Alliance Laundry Systems LLC – DO NOT COPY or TRANSMIT

Basket, Pulley and Belt - 75 Pound Models

REF	PART NO.	DESCRIPTION	COMMENTS
1	B12537901	Basket and Pulley Kit	Models through Serial No. 10040300102; Includes B12327301 Basket, 226/00150/00 Basket Pulley, 206/00056/00 Screw, 226/00152/00 Motor Pulley, 226/00151/00 Belt and 9001445 Key
	B12327301	Drum	Models starting Serial No. 10040300103
2	9001445	Key	Models starting Serial No. 10040300103
3	9001601	Counter Ring	
4	9001134	Shaft Seal	
5	9001439	Roller Bearing	
6	9001602	Bearing Spacer	
7	9001335	Screw	
8	212/00009/00	Pulley	Models through 12/31/07
	239/00013/00	Pulley	Models starting 1/1/08
9	9001629	Pulley	Models through Serial No. 10040300102
	226/00150/00	Pulley	Models starting Serial No. 10040300103
10	9001284	Bolt	
11	9001238	Washer	
12	9001217	Washer	
13	206/00056/00	Screw	Models starting Serial No. 10040300103
14	9001575	V-Belt	3 required; Models through Serial No. 10040300102
	226/00151/00	Belt	1 required; Models starting Serial No. 10040300103

info@zipnasklade.ru
8(800)500-69-51

© Copyright, Alliance Laundry Systems LLC – DO NOT COPY or TRANSMIT

Motor - 55 Pound Models

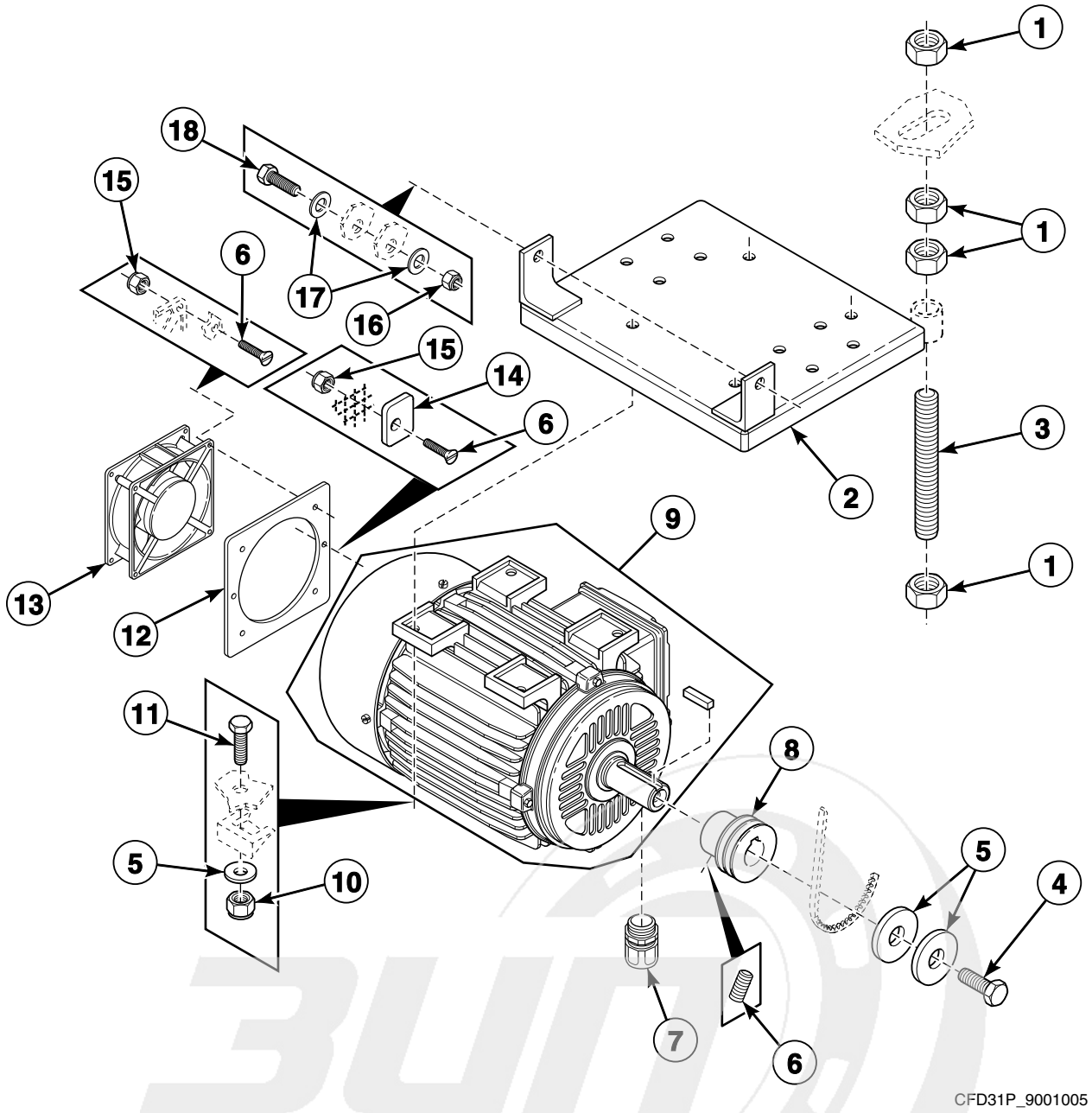

info@zipnasklade.ru
8(800)500-69-51

© Copyright, Alliance Laundry Systems LLC – DO NOT COPY or TRANSMIT

Motor - 55 Pound Models

REF	PART NO.	DESCRIPTION	COMMENTS
1	9001257	Nut	
2	9001030	Motor Plate	
3	9001020	Belt Adjusting Rod	
4	9001286	Bolt	
5	9001211	Washer	
6	9001294	Screw	
7	9001432	Cordlock	
8	9001570	Pulley	Models through Serial No. 08010230051
	185/00086/00	Pulley	Models starting Serial No. 08010230052
9	B12510901	Motor	
10	9001264	Nut	
11	9001283	Bolt	
12	9001055	Intermediate Fan Motor Plate	
13	9001375	Cooling Fan	
14	9001036	Bearing Retainer Ring	
15	9001268	Nut	
16	9001266	Nut	
17	9001209	Washer	
18	9001307	Bolt	

info@zipnasklade.ru
8(800)500-69-51

© Copyright, Alliance Laundry Systems LLC – DO NOT COPY or TRANSMIT

Motor - 75 Pound Models

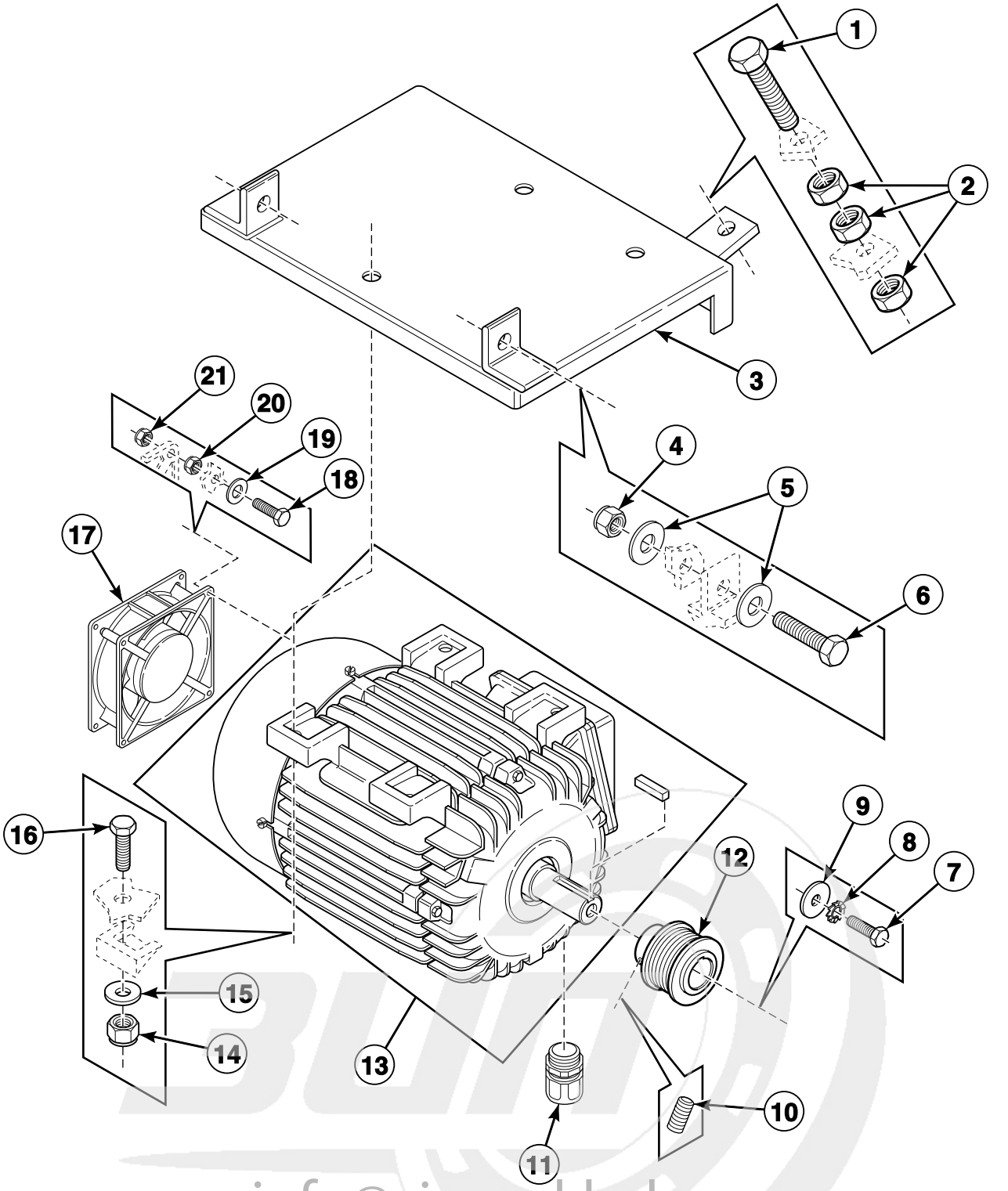

info@zipnasklade.ru
8(800)500-69-51

© Copyright, Alliance Laundry Systems LLC – DO NOT COPY or TRANSMIT

Motor - 75 Pound Models

REF	PART NO.	DESCRIPTION	COMMENTS
1	9001297	Bolt	
2	9001255	Nut	
3	9001029	Motor Plate	
4	9001266	Nut	
5	9001208	Washer	
6	9001307	Bolt	
7	9001286	Bolt	
8	9001239	Washer	
9	9001211	Washer	
10	9001302	Screw	Models through Serial No. 10040300102
	206/00056/00	Screw	Models starting Serial No. 10040300103
11	9001432	Cordlock	
12	9001574	Pulley	Models through Serial No. 10040300102
	226/00152/00	Pulley	Models starting Serial No. 10040300103
13	9001576P	Motor	
14	9001264	Nut	
15	9001211	Washer	
16	9001283	Bolt	
17	9001375	Cooling Fan	
18	9001329	Screw	
19	9001243	Washer	
20	9001252	Nut	
21	9001267	Nut	

info@zipnasklade.ru
8(800)500-69-51

© Copyright, Alliance Laundry Systems LLC – DO NOT COPY or TRANSMIT

Drain Assembly

Models UX055PVXF7, UX55PVXF6 and UX55PVXF7

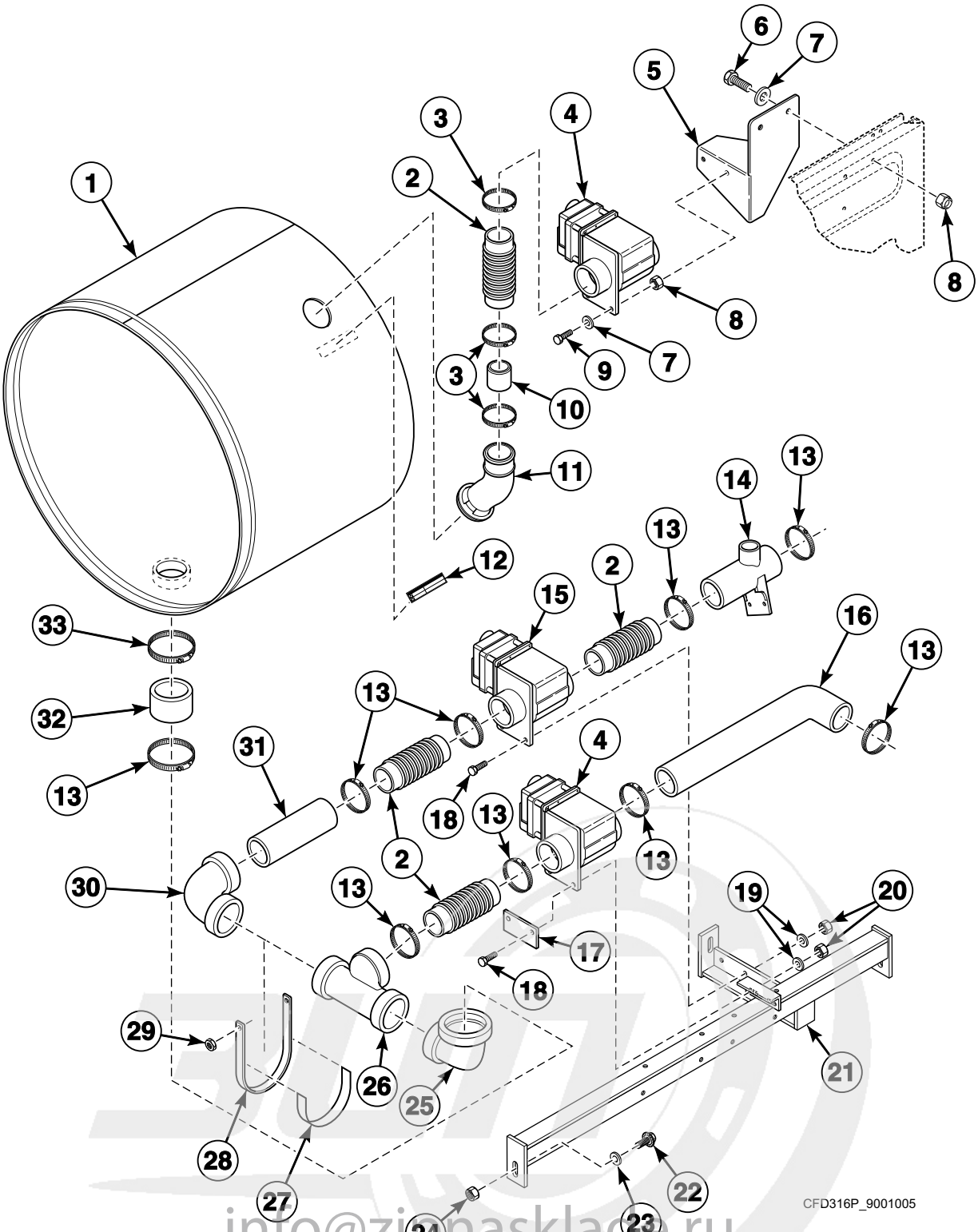

info@zipnasklade.ru
8(800)500-69-51

© Copyright, Alliance Laundry Systems LLC – DO NOT COPY or TRANSMIT

Drain Assembly

REF	PART NO.	DESCRIPTION	COMMENTS
	210/00905/00	Drain Valve Wiring Harness	
1	119/00213/11	Tub	
2	F200171	Supply Hose	
3	9001494	Hose Clamp	
4	F0380632-00	Drain Valve	
5	111/10312/00	Drain Valve Mounting Bracket	
6	9001277	Bolt	
7	202/00101/00	Washer	
8	9001254	Nut	
9	9001275	Bolt	
10	B12341901	Coupling	
11	F0200236-01	Supply Dispenser Hose	
12	44127701	Warning Label	
13	F200213	Hose Clamp	
14	F0380318-00	Drain Tee	
15	803292	Gravity Drain Valve	
16	F0150470-01	Hose	
17	111/10318/00	Drain Valve Bracket Plate	
18	F430939	Screw	
19	F431147	Washer	
20	F431024	Nut	
21	F0638013-00	Drain Valve Bracket	
22	F430927	Screw	
23	M400080	Washer	
24	F430218	Nut	
25	223/00363/00	Elbow	
26	223/00369/00	Tee	
27	246/00149/00	Gasket	1.2 meters used
28	111/10300/00	Drain Support Bracket	
29	9001266	Nut	
30	223/00368/00	Drain Elbow	
31	223/00370/00	Pipe	
32	9001526	Drain Valve to Drain Pipe Hose	
33	F200201	Hose Clamp	

info@zipnasklade.ru
8(800)500-69-51

© Copyright, Alliance Laundry Systems LLC – DO NOT COPY or TRANSMIT

Single Drain Assembly

All Models Except UX055PVXF7, UX55PVXF6 and UX55PVXF7

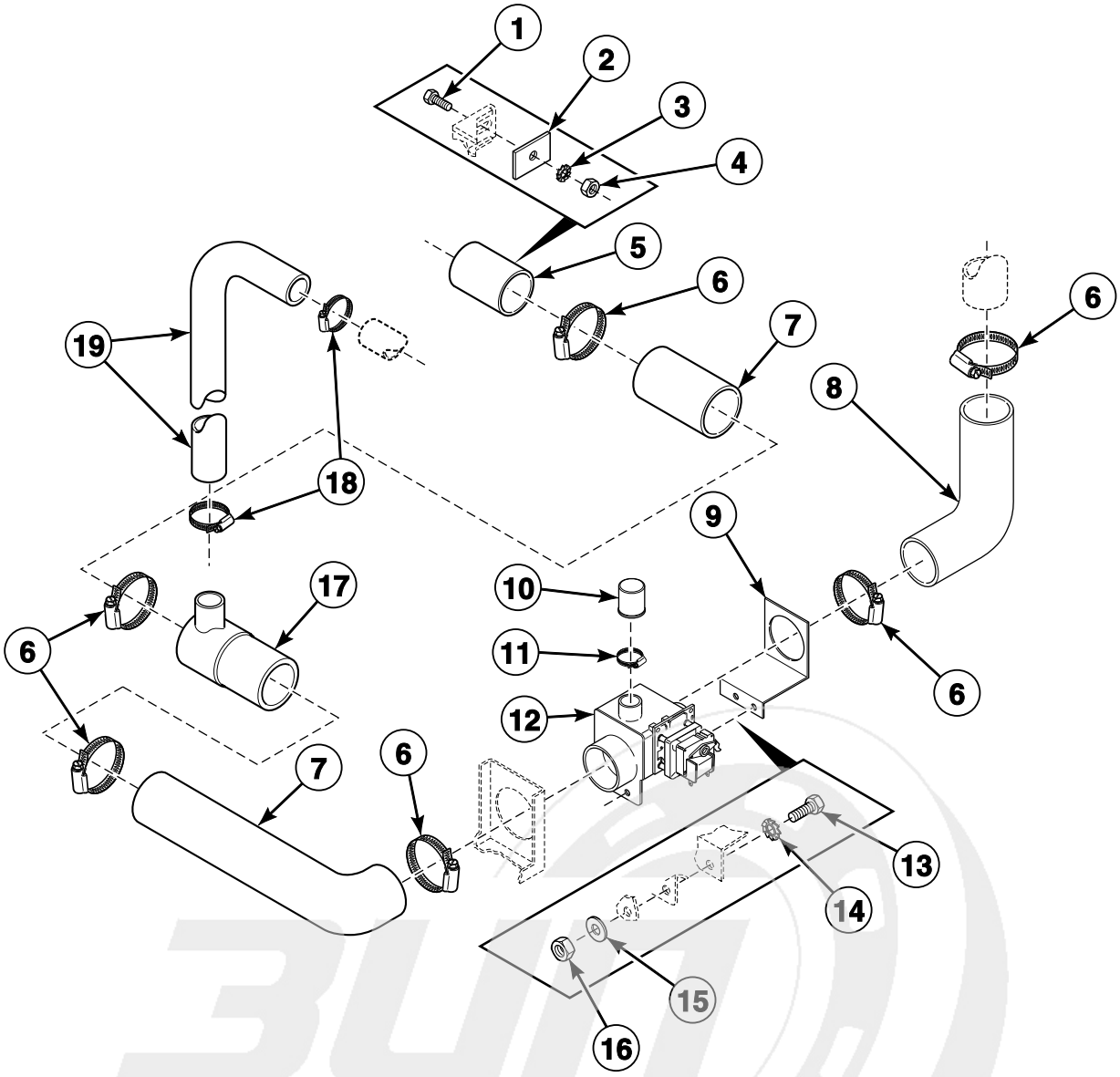

info@zipnasklade.ru
8(800)500-69-51

© Copyright, Alliance Laundry Systems LLC – DO NOT COPY or TRANSMIT

Single Drain Assembly

REF	PART NO.	DESCRIPTION	COMMENTS
	900/00261/UL00	Drain Valve Harness	
1	9001273	Bolt	
2	9001037	Outlet Pipe Plate Assembly	
3	9001241	Washer	
4	9001260	Nut	
5	9001518	Drain Pipe	
6	9001502	Hose Clamp	
7	9001526	Drain Valve to Drain Pipe Hose	
8	9001525	Drain Tub to Drain Valve Hose	
9	9001099	Drain Valve Plate Assembly	
10	9001503	Drain Valve Overflow Plug	
11	9001493	Hose Clamp	
12	9001355	Drain Valve	
13	9001287	Bolt	
14	9001240	Washer	
15	9001227	Washer	
16	9001249	Nut	
17	9001518	Drain Pipe	
18	9001494	Hose Clamp	
19	223/00131/00	Overflow Hose	

info@zipnasklade.ru
8(800)500-69-51

© Copyright, Alliance Laundry Systems LLC – DO NOT COPY or TRANSMIT

Dual Drain Assembly

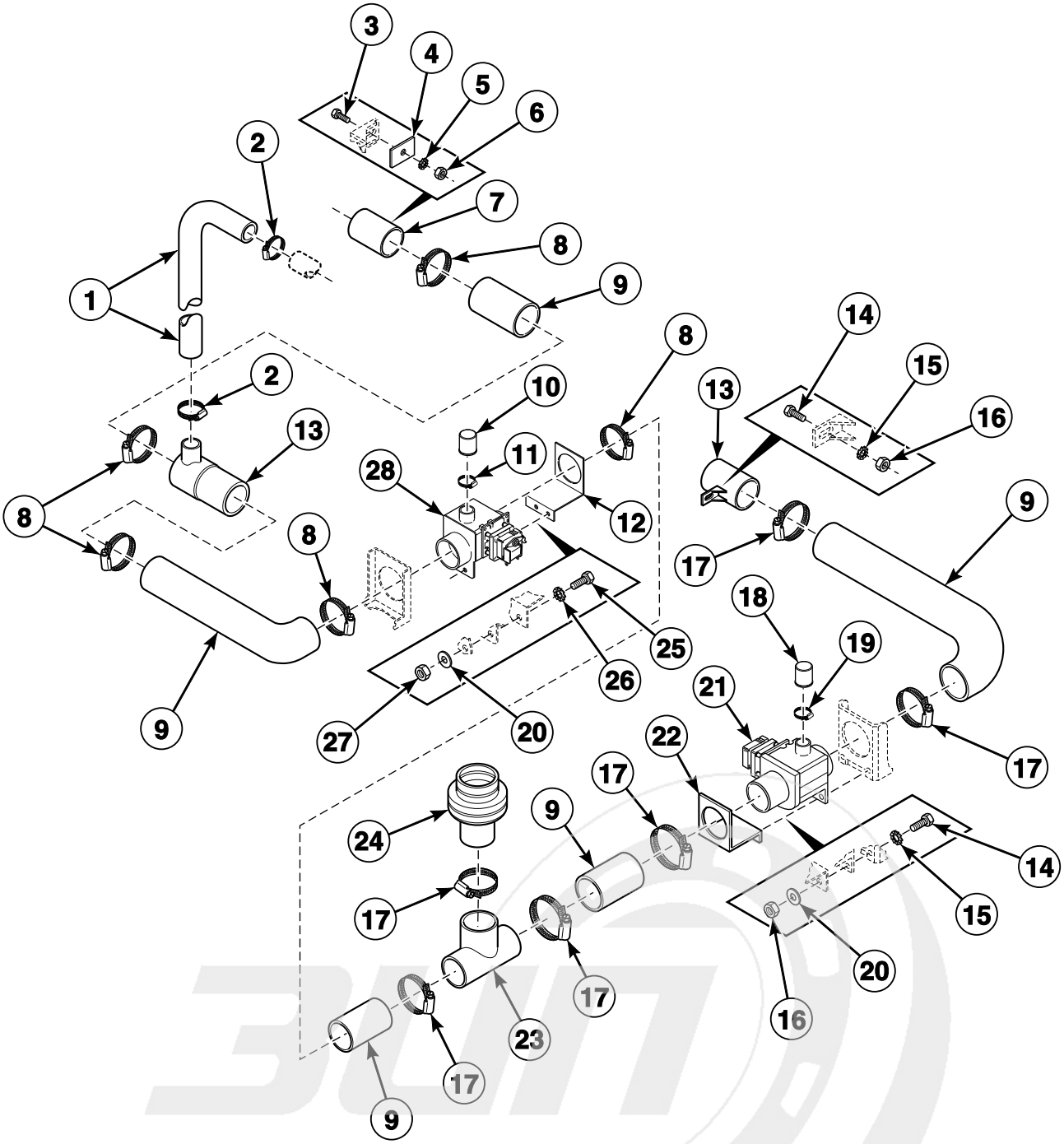

CFD113P_9001005

info@zipnasklade.ru
8(800)500-69-51

© Copyright, Alliance Laundry Systems LLC – DO NOT COPY or TRANSMIT

Dual Drain Assembly

REF	PART NO.	DESCRIPTION	COMMENTS
	900/00261/UL00	Drain Valve Harness	
	831P3	Drain Kit	Includes items 9 and 13-24, F200104100 2-Drain Harness and installation instructions
1	223/00131/00	Overflow Hose	
2	9001494	Hose Clamp	
3	9001273	Bolt	
4	9001037	Outlet Pipe Plate Assembly	
5	9001241	Washer	
6	9001260	Nut	
7	9001518	Drain Pipe	
8	9001502	Hose Clamp	
9	9001526	Drain Valve to Drain Pipe Hose	
10	9001503	Drain Valve Overflow Plug	
11	9001493	Hose Clamp	
12	9001099	Drain Valve Plate Assembly	
13	9001518	Drain Pipe	
14	9001287	Bolt	
15	9001240	Washer	
16	9001260	Nut	
17	9001502	Hose Clamp	
18	9001503	Drain Valve Overflow Plug	
19	9001493	Hose Clamp	
20	9001227	Washer	
21	9001361	Drain Valve	
22	9001099	Drain Valve Plate Assembly	
23	253/00006/00	T-Piece	
24	223/00170/00	Exhaust Valve Hose	
25	9001287	Bolt	
26	9001240	Washer	
27	9001249	Nut	
28	9001355	Drain Valve	

info@zipnasklade.ru
8(800)500-69-51

© Copyright, Alliance Laundry Systems LLC – DO NOT COPY or TRANSMIT

Door Lock

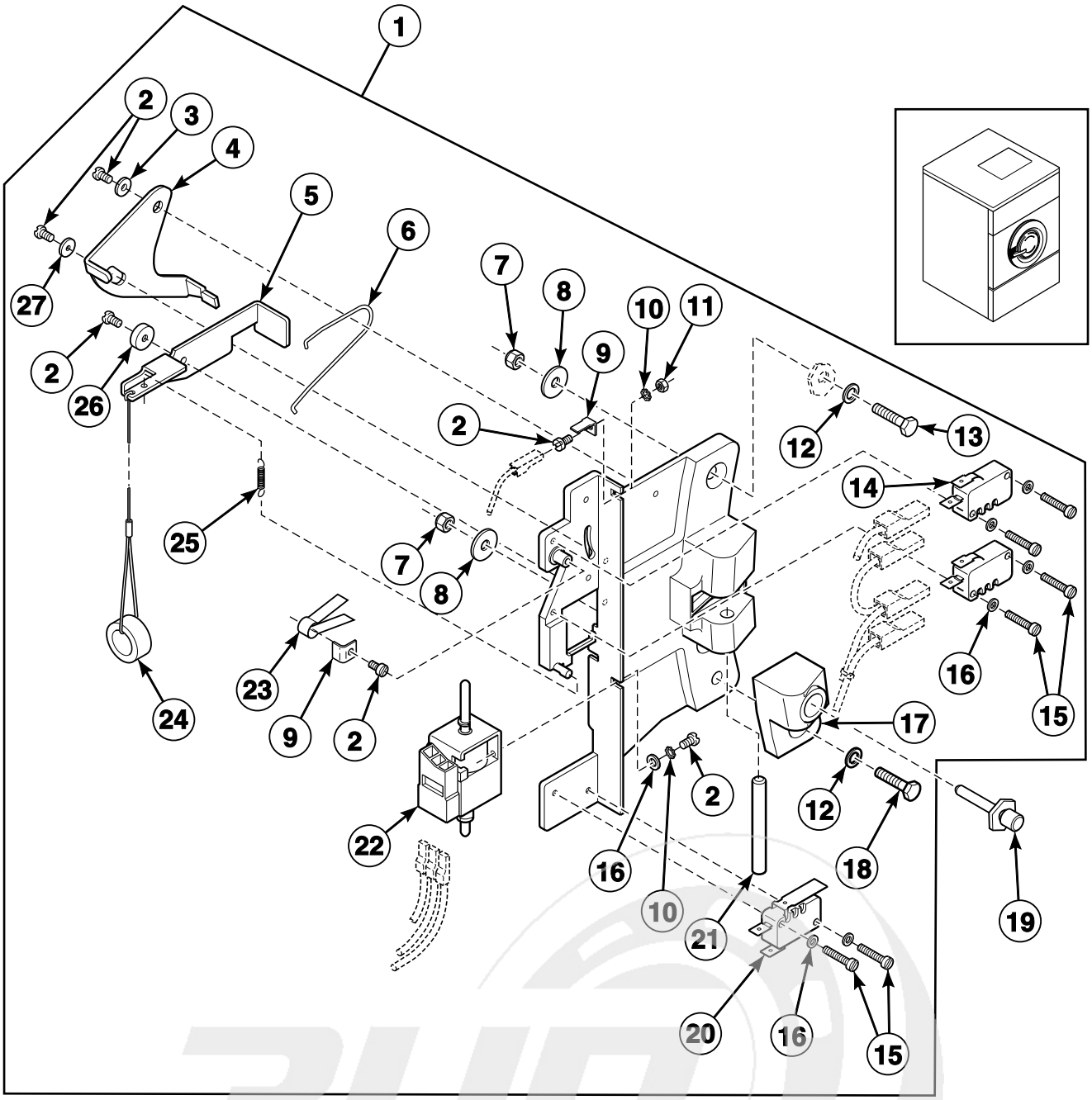

CFD543P_9001005

info@zipnasklade.ru
8(800)500-69-51

© Copyright, Alliance Laundry Systems LLC – DO NOT COPY or TRANSMIT

Door Lock

REF	PART NO.	DESCRIPTION	COMMENTS
1	B12517701	Door Lock Assembly	
2	207/00135/00	Screw	
3	9001221	Washer	
4	9001479	Switch Lever	
5	9001478	Interlock Lever	
6	9001553	Lever Spring	
7	9001254	Nut	
8	9001213	Washer	
9	9001419	Ground Terminal	
10	9001244	Washer	
11	9001253	Nut	
12	9001230	Washer	
13	9001273	Bolt	
14	9001371	Door Lock Microswitch	
15	9001324	Screw	
16	9001222	Washer	
17	9001998	Door Lock Pin Bracket	
18	9001949	Bolt	
19	9001997	Door Lock Pin and Pivot Block Kit	
20	9001372	Light Microswitch	
21	9001468	Lock Shaft	
22	209/00703/50	Door Solenoid	
23	9001558	Door Lock Spring	
24	9001950	Door Release Wire	
25	9001554	Interlock Coil Spring	
26	9001477	Door Lock Spacer	
27	202/00124/00	Washer	

info@zipnasklade.ru
8(800)500-69-51

© Copyright, Alliance Laundry Systems LLC – DO NOT COPY or TRANSMIT

Door - Design 6 Models

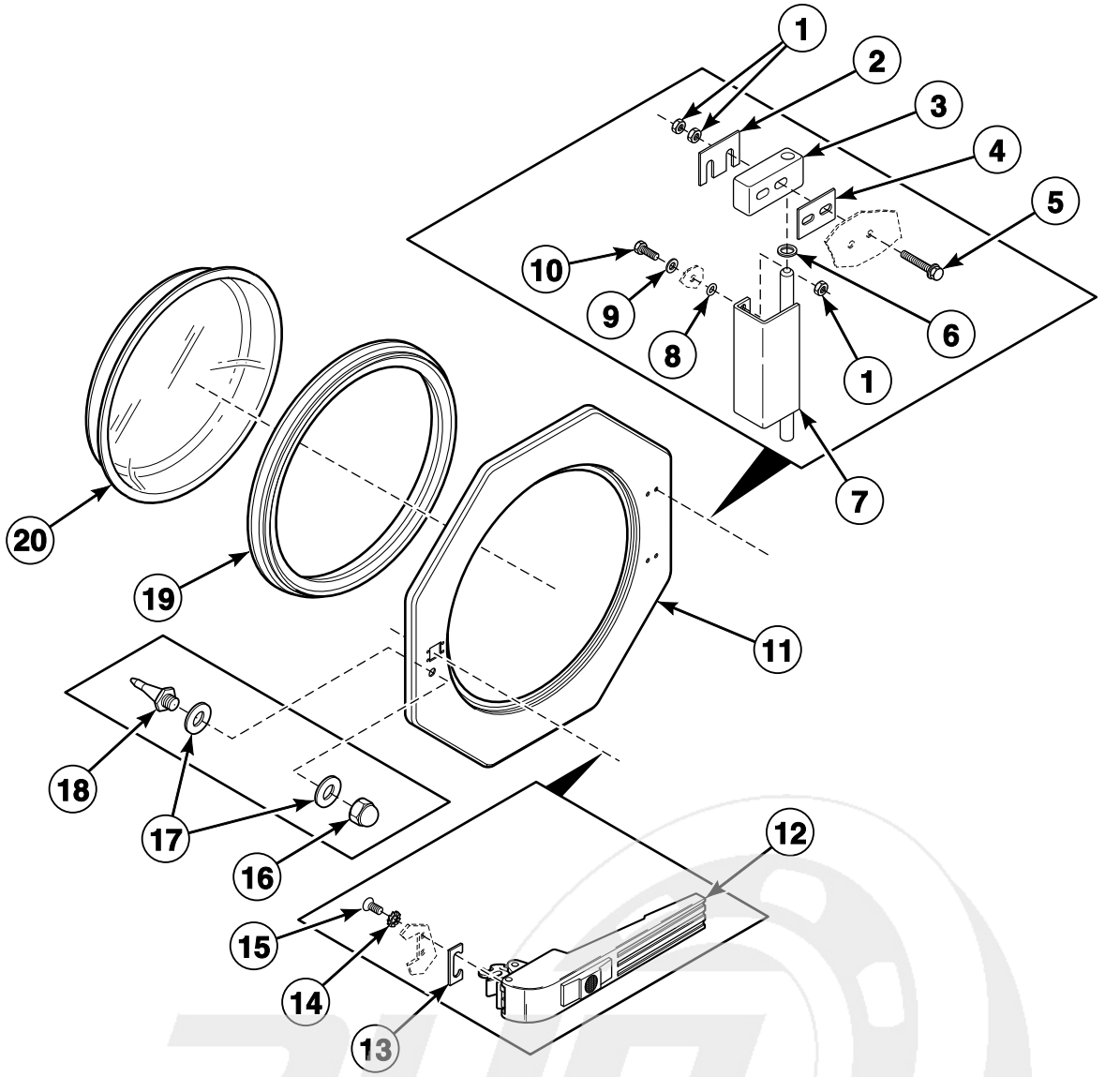

CFD34P_9001005

info@zipnasklade.ru
8(800)500-69-51

© Copyright, Alliance Laundry Systems LLC – DO NOT COPY or TRANSMIT

Door - Design 6 Models

REF	PART NO.	DESCRIPTION	COMMENTS
1	9001260	Nut	
2	9001038	Door Hinge Plate Assembly	
3	9001628	Door Hinge Block	
4	9001105	Door Hinge Spacer	1.5 mm
	9001106	Door Hinge Spacer	2 mm
5	9001341	Screw	
6	9001232	Washer	
7	9001486	Hinge	
8	9001469	O-Ring	
9	9001230	Washer	
10	9001274	Bolt	
11	9001131	Door	
12	217/00055/00	Door Handle	
13	9001467	Door Handle Stop	
14	9001245	Washer	
15	9001326	Screw	
16	9001258	Nut	
17	202/00111/00	Washer	
18	9001997	Door Lock Pin and Pivot Block Kit	Includes door lock pin
19	9001501	Door Glass Seal	
20	B12449801	Door Glass	

info@zipnasklade.ru
8(800)500-69-51

© Copyright, Alliance Laundry Systems LLC – DO NOT COPY or TRANSMIT

Door - Design 7 Models Through 9/30/07

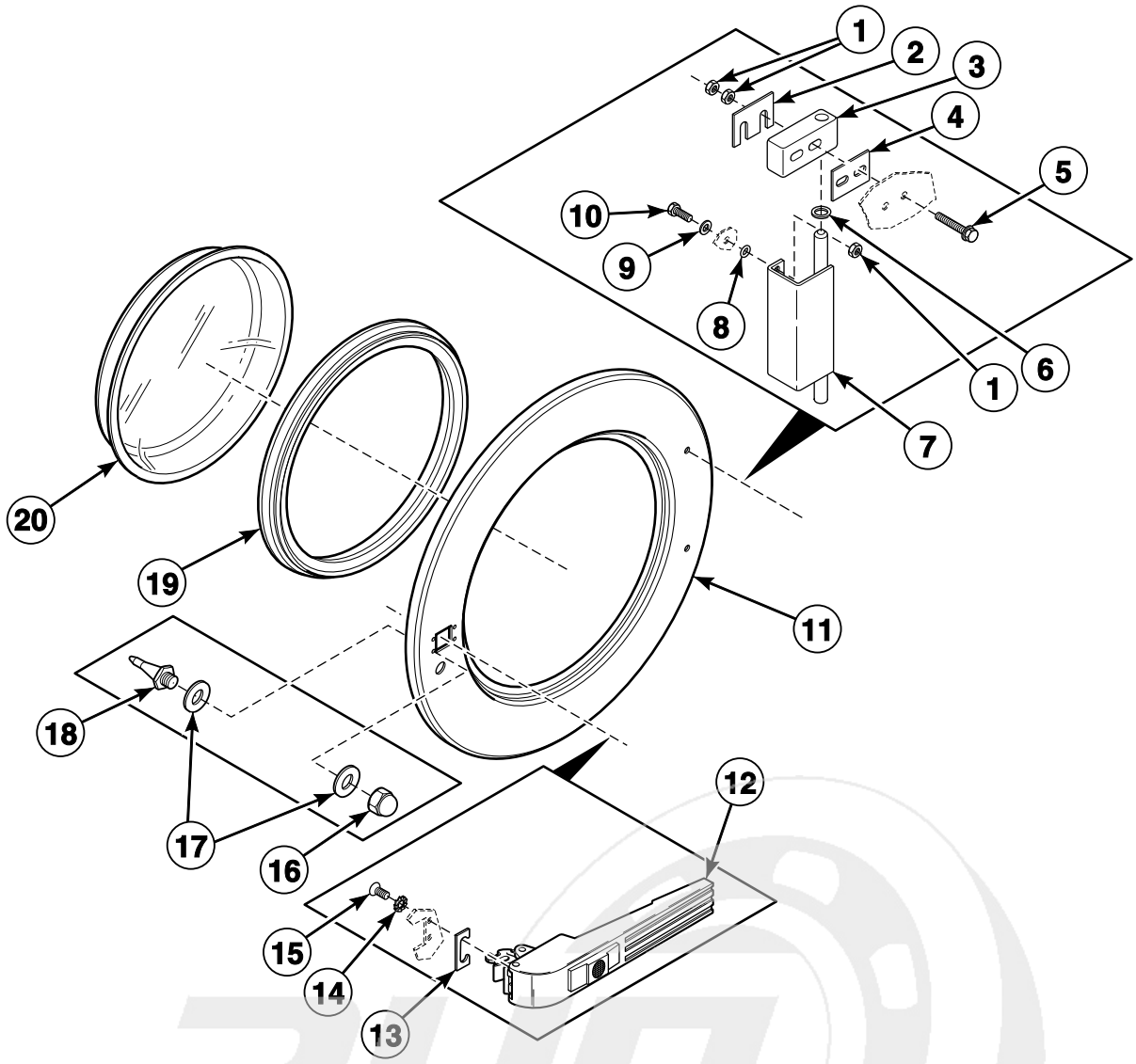

CFD207P_9001005

info@zipnasklade.ru
8(800)500-69-51

© Copyright, Alliance Laundry Systems LLC – DO NOT COPY or TRANSMIT

Door - Design 7 Models Through 9/30/07

REF	PART NO.	DESCRIPTION	COMMENTS
1	9001260	Nut	
2	9001038	Door Hinge Plate Assembly	
3	9001628	Door Hinge Block	
4	9001105	Door Hinge Spacer	1.5 mm
	9001106	Door Hinge Spacer	2 mm
5	9001341	Screw	
6	9001232	Washer	
7	9001486	Hinge	
8	9001469	O-Ring	
9	9001230	Washer	
10	9001274	Bolt	
11	118/00125/00	Door	
12	217/00055/00	Door Handle	
13	9001467	Door Handle Stop	
14	9001245	Washer	
15	9001326	Screw	
16	9001258	Nut	
17	202/00111/00	Washer	
18	9001997	Door Lock Pin and Pivot Block Kit	Includes door lock pin
19	9001501	Door Glass Seal	
20	B12449801	Door Glass	

info@zipnasklade.ru
8(800)500-69-51

© Copyright, Alliance Laundry Systems LLC – DO NOT COPY or TRANSMIT

Door - Design 7 Models Starting 10/1/07

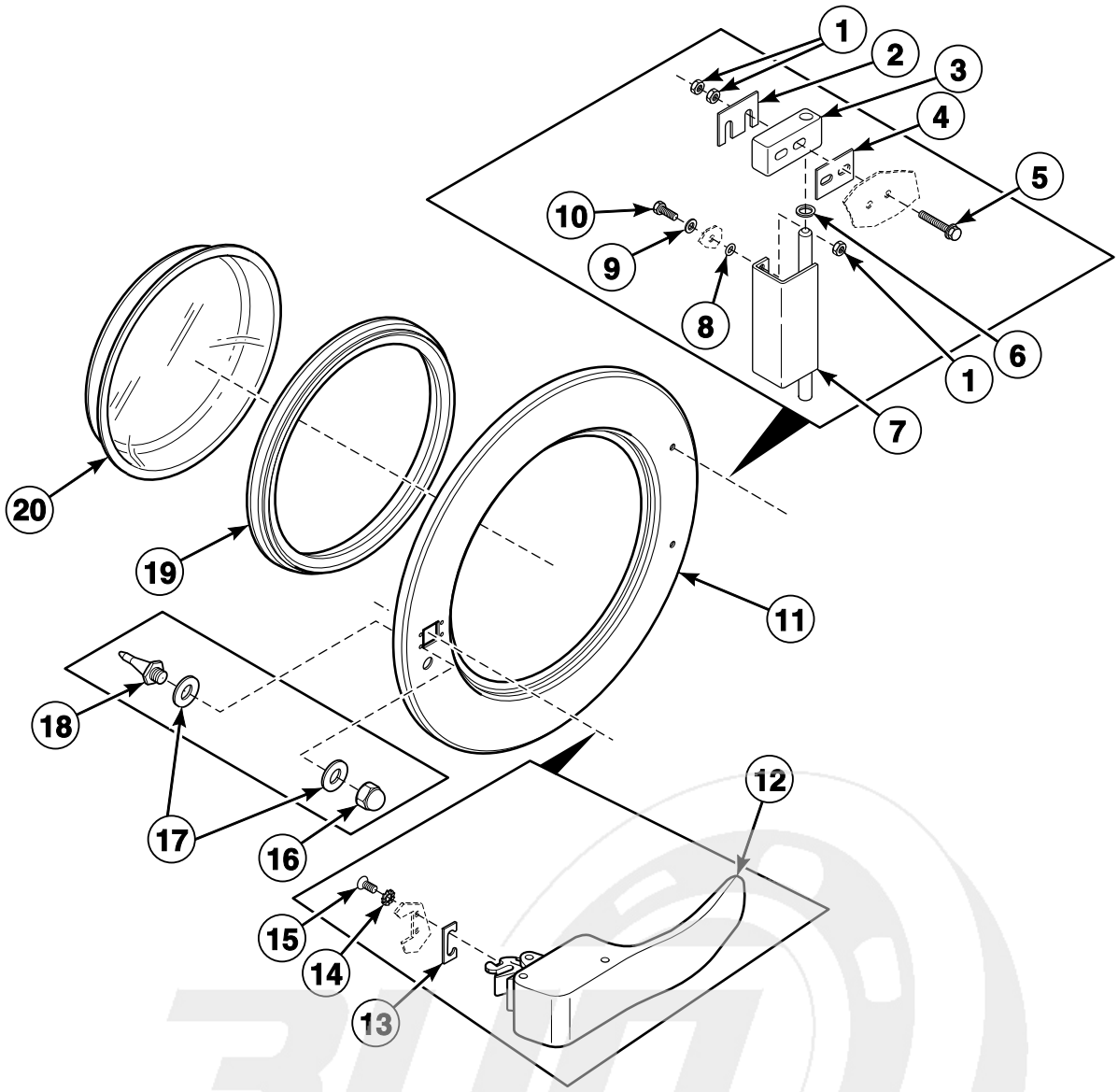

CFD263P_9001005

info@zipnasklade.ru
8(800)500-69-51

© Copyright, Alliance Laundry Systems LLC – DO NOT COPY or TRANSMIT

Door - Design 7 Models Starting 10/1/07

REF	PART NO.	DESCRIPTION	COMMENTS
1	9001260	Nut	
2	9001038	Door Hinge Plate Assembly	
3	9001628	Door Hinge Block	
4	9001105	Door Hinge Spacer	1.5 mm
	9001106	Door Hinge Spacer	2 mm
5	9001341	Screw	
6	9001232	Washer	
7	9001486	Hinge	
8	9001469	O-Ring	
9	9001230	Washer	
10	9001274	Bolt	
11	118/00125/00	Door	
12	217/00065/00	Door Handle	
13	9001467	Door Handle Stop	
14	9001245	Washer	
15	B12500801	Screw	
16	9001258	Nut	
17	202/00111/00	Washer	
18	9001997	Door Lock Pin and Pivot Block Kit	Includes door lock pin
19	9001501	Door Glass Seal	
20	B12449801	Door Glass	

info@zipnasklade.ru
8(800)500-69-51

© Copyright, Alliance Laundry Systems LLC – DO NOT COPY or TRANSMIT

Door Handle

Models Through 9/30/07

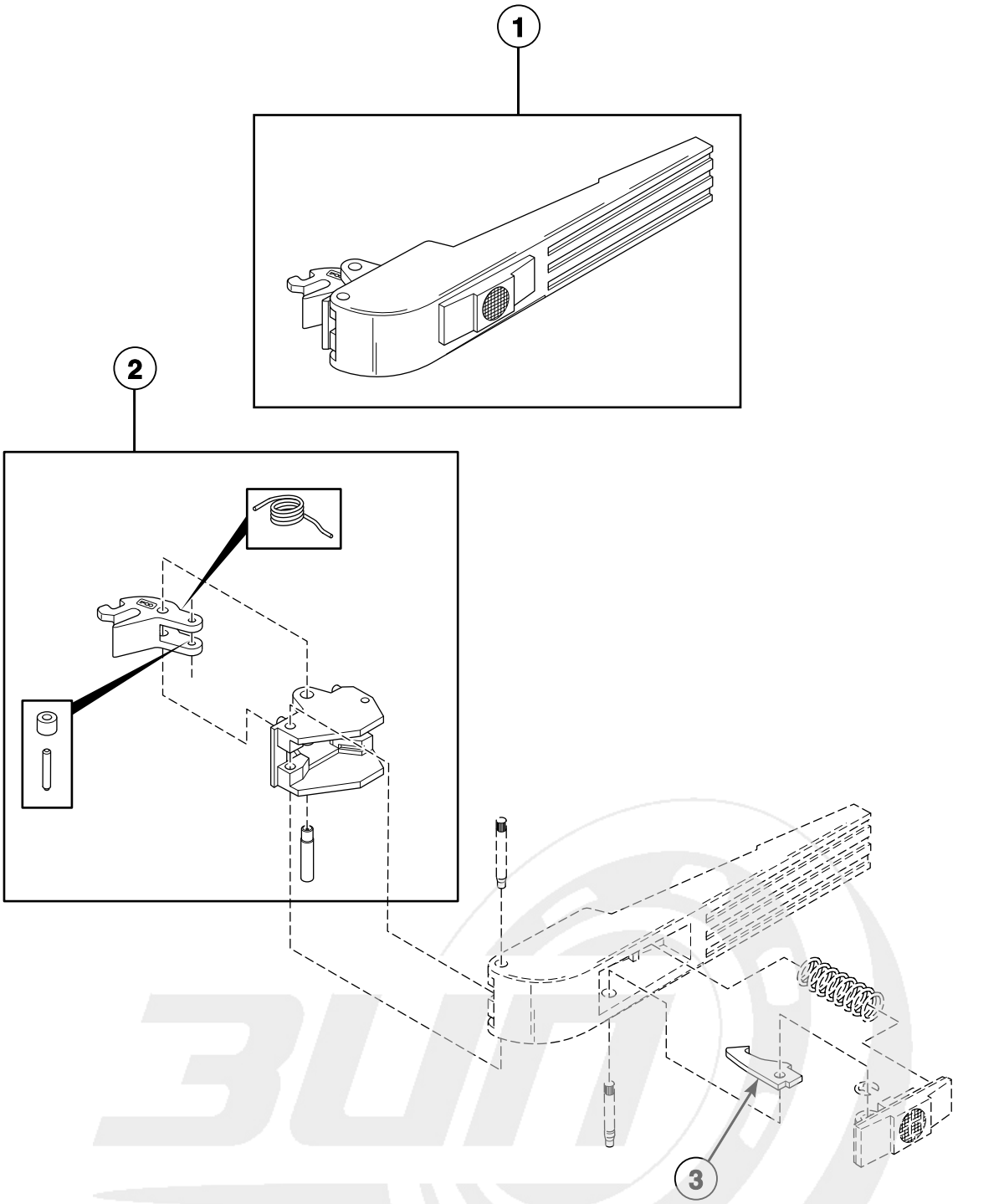

CFD10P_9001005

info@zipnasklade.ru
8(800)500-69-51

© Copyright, Alliance Laundry Systems LLC – DO NOT COPY or TRANSMIT

Door Handle

REF	PART NO.	DESCRIPTION	COMMENTS
1	217/00055/00	Door Handle	
2	9001474	Door Handle Latch	
3	9001473	Door Handle Catch	

info@zipnasklade.ru
8(800)500-69-51

© Copyright, Alliance Laundry Systems LLC – DO NOT COPY or TRANSMIT

Control Panel - Models UX055PVXF7, UX55PVXF6 and UX55PVXF7

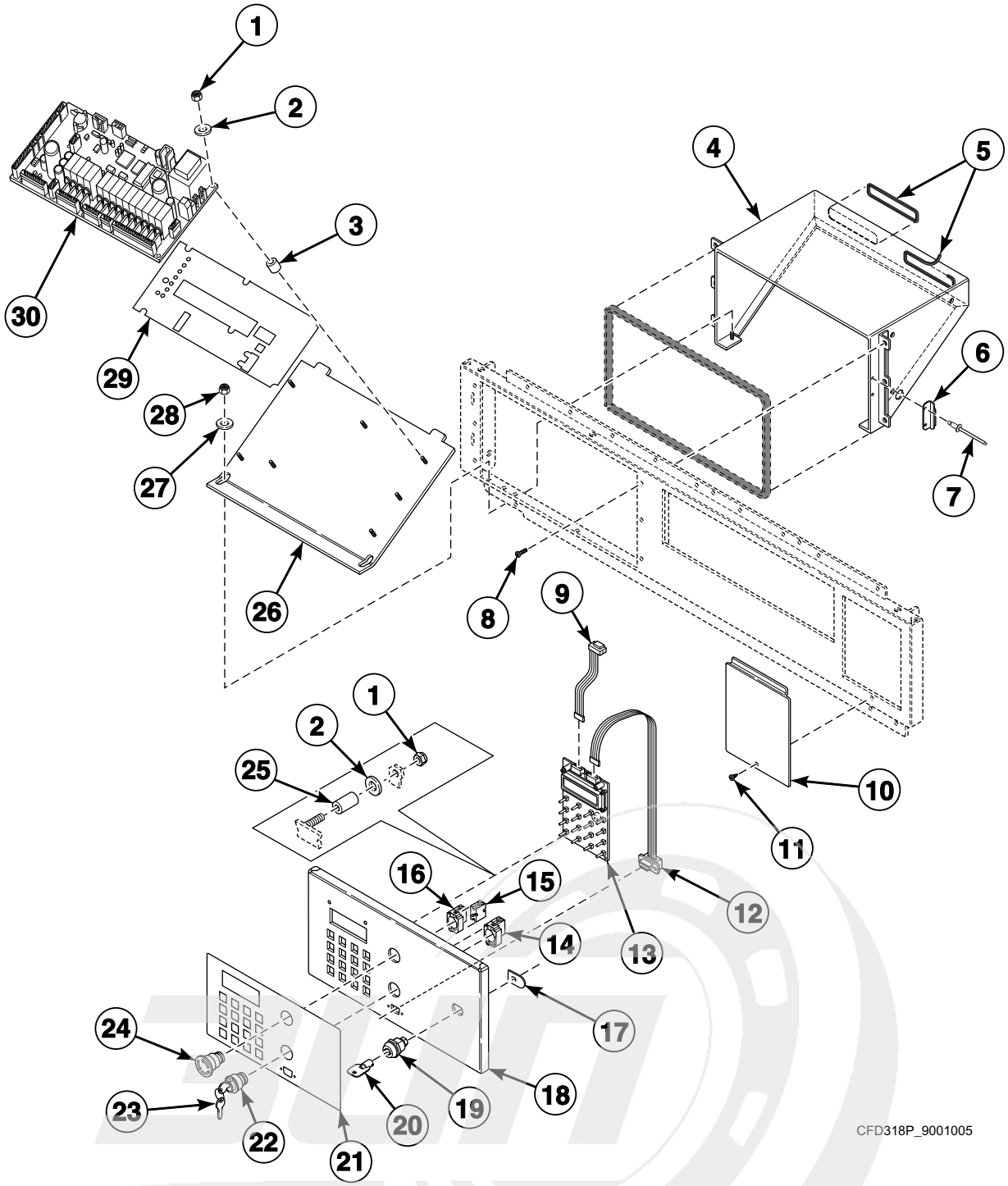

info@zipnasklade.ru
8(800)500-69-51

© Copyright, Alliance Laundry Systems LLC – DO NOT COPY or TRANSMIT

Control Panel - Models UX055PVXF7, UX55PVXF6 and UX55PVXF7

REF	PART NO.	DESCRIPTION	COMMENTS
1	9001269	Nut	
2	9001523	Washer	
3	211/00128/00	Printboard Separator	
4	F0637819-00	Control Module Wrap	
5	211/00143/00	Trim	
6	111/10310/03	Latch	
7	9001346	Rivet	
8	201415	Screw	
9	9001417	Flat Cable	
10	F0637820-00	Balance Switch Access Cover	
11	F430956	Screw	
12	9001418	Programming Cable	
13	209/00580/03	Display	
14	9001356	Switch Base	
15	44018901	Contact Block	
16	44018701	Contact Block	
17	F606295	Lock Latch	
18	F0637813-00	Control Module Face	
19	F190802P	Lid Lock	
20	F160562	Key	
21	9001561	Overlay	
22	9001378	Programming Key Contact Switch	
23	9001756	Programming Key	
24	44018801	Pushbutton	
25	211/00140/00	Spacer	
26	F0637821-00	Control Module Bottom Assembly	
27	F431017	Nut	
28	F431123	Washer	
29	229/00255/00	Insulating Sticker	
30	9002100AR	Main Control	Army cycles
	9002100MA	Main Control	Marine cycles

info@zipnasklade.ru
8(800)500-69-51

© Copyright, Alliance Laundry Systems LLC – DO NOT COPY or TRANSMIT

Control Panel - All Models Except UX055PVXF7, UX55PVXF6 and UX55PVXF7

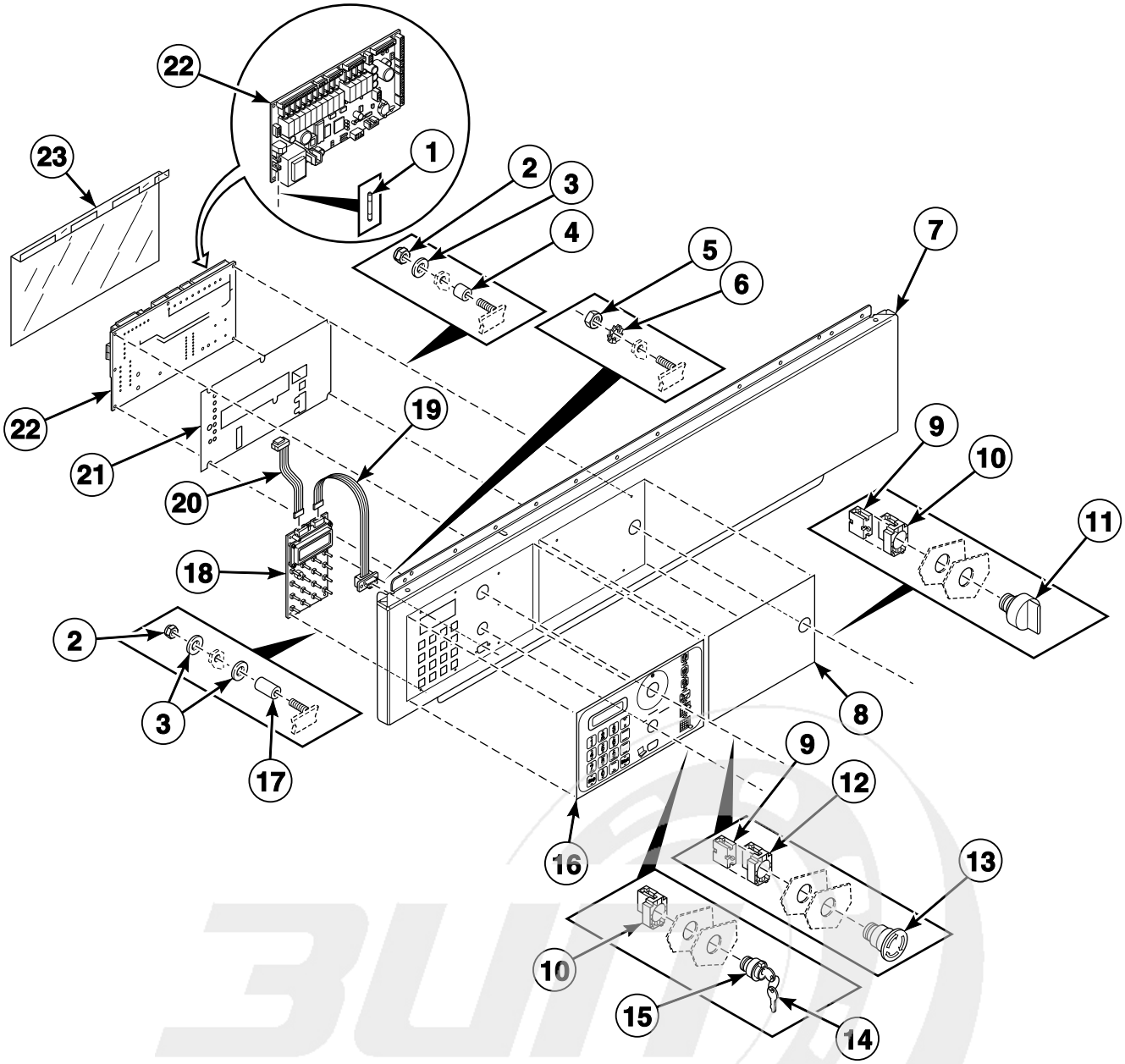

info@zipnasklade.ru
8(800)500-69-51

© Copyright, Alliance Laundry Systems LLC – DO NOT COPY or TRANSMIT

Control Panel - All Models Except UX055PVXF7, UX55PVXF6 and UX55PVXF7

REF	PART NO.	DESCRIPTION	COMMENTS
1	9001379	Fuse	
2	9001269	Nut	
3	9001523	Washer	
4	9001425	Spacer	
5	9001253	Nut	
6	9001244	Washer	
7	9001089	Control Panel	55 pound models
	9001068	Control Panel	75 pound models
8	F8435601	Overlay	UX models
	9001563	Overlay	SX models
	9001890	Logo Decal	HX models
9	44018901	Contact Block	
10	9001356	Switch Base	
11	9002072	Switch Knob	Steam and electric heat
12	44018701	Contact Block	
13	44018801	Pushbutton	
14	9001756	Programming Key	Key code 455
15	9001378	Programming Key Contact Switch	
16	9001561	Overlay	
17	9001659	Spacer	
18	209/00580/03	Display	
19	9001418	Programming Cable	
20	9001417	Flat Cable	
21	229/00255/00	Insulating Sticker	
22	9002100	Main Control	
	210/01304/07	Soap Harness	Main control to soap board
23	229/00289/00	Circuit Board Cover	

info@zipnasklade.ru
8(800)500-69-51

© Copyright, Alliance Laundry Systems LLC – DO NOT COPY or TRANSMIT

Control Module Through February 2006 - 55 Pound Models

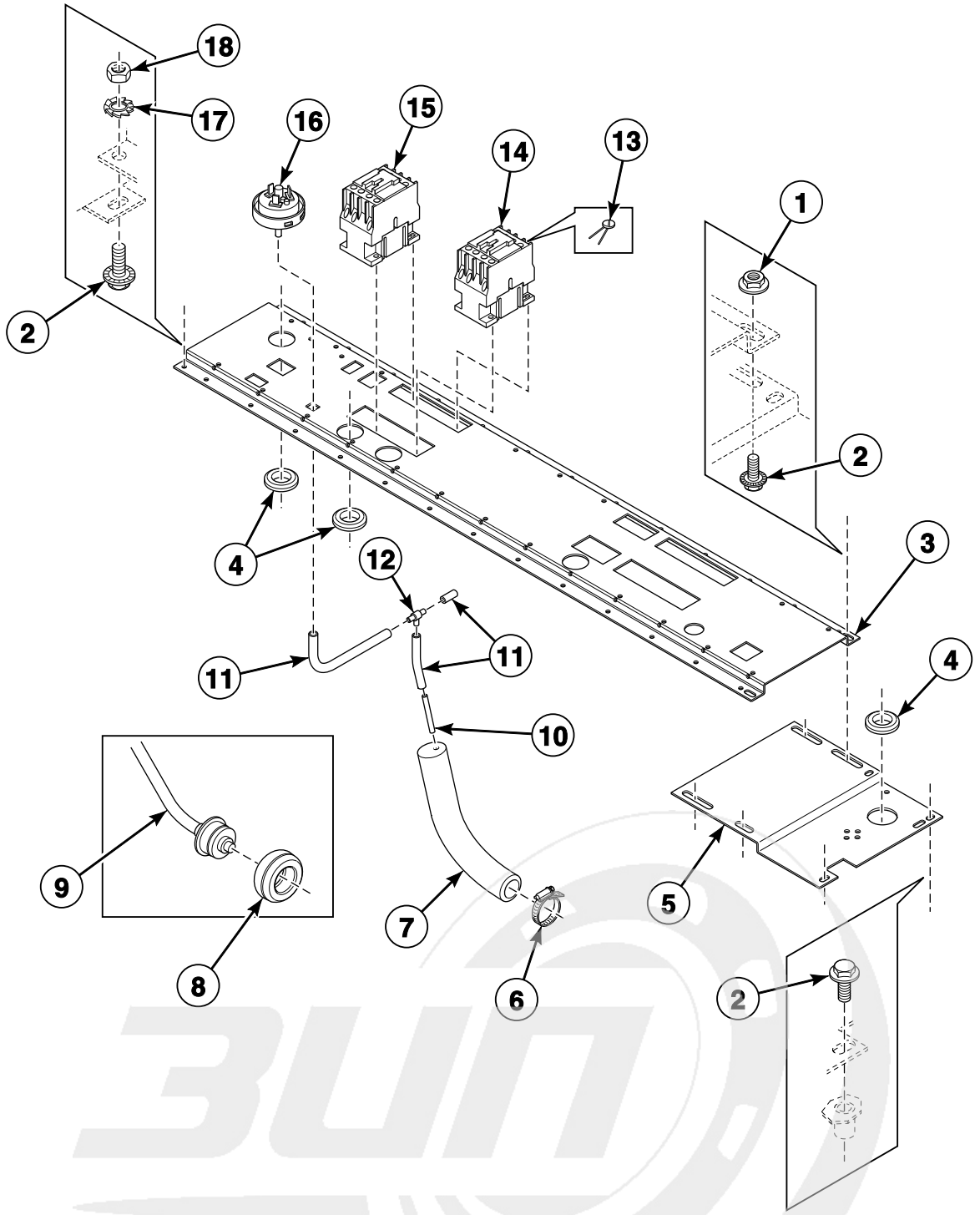

info@zipnasklade.ru
8(800)500-69-51

© Copyright, Alliance Laundry Systems LLC – DO NOT COPY or TRANSMIT

Control Module Through February 2006 - 55 Pound Models

REF	PART NO.	DESCRIPTION	COMMENTS
1	9001311	Nut	
2	9001310	Bolt	
3	9001053	Electrical Component Plate	
4	9001539	Grommet	
5	9001144	Electrical Component Extension Plate	
6	9001492	Hose Clamp	
7	9001542	Pressure Switch Elbow	
8	9001564	Thermostat Seal	
9	210/01064/16	Thermostat	
10	9001496	Hose Barb	
11	223/00333/00	Pressure Hose	
12	223/00173/10	Pressure Switch Hose Tee	
13	9001746	Noise Suppressor	
14	9002066	Contactor	Heating
15	9001352	Contactor	
16	9001351	Pressure Switch	
17	9001241	Washer	
18	9001250	Nut	

info@zipnasklade.ru
8(800)500-69-51

© Copyright, Alliance Laundry Systems LLC – DO NOT COPY or TRANSMIT

Control Module Through February 2006 - 75 Pound Models

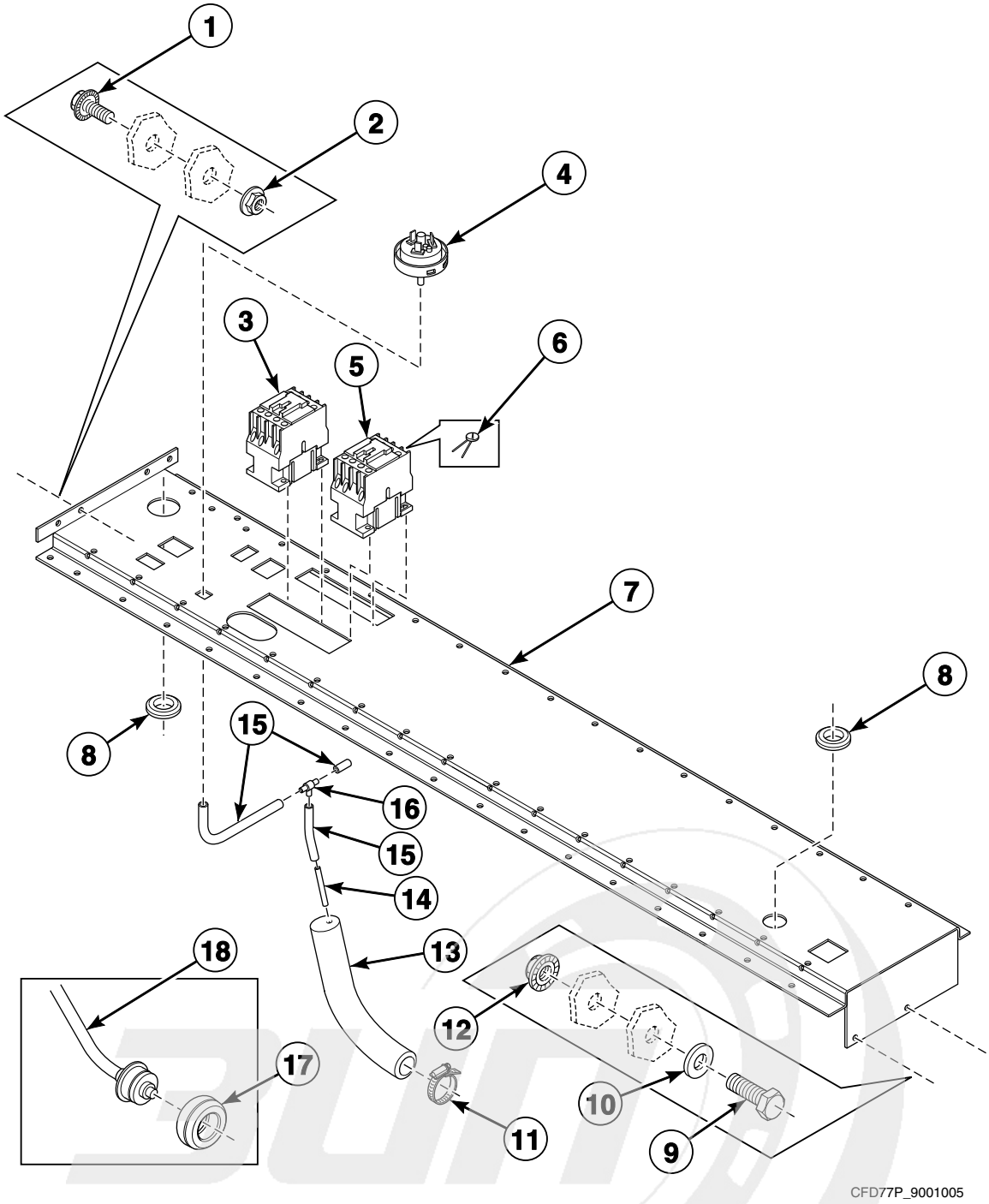

info@zipnasklade.ru
8(800)500-69-51

© Copyright, Alliance Laundry Systems LLC – DO NOT COPY or TRANSMIT

Control Module Through February 2006 - 75 Pound Models

REF	PART NO.	DESCRIPTION	COMMENTS
1	9001310	Bolt	
2	9001311	Nut	
3	9001352	Contactor	
4	9001351	Pressure Switch	
5	9002066	Contactor	Heating
6	9001746	Noise Suppressor	
7	9001057	Electrical Components Plate	
8	9001539	Grommet	
9	9001277	Bolt	
10	9001230	Washer	
11	9001492	Hose Clamp	
12	9001146	Electrical Components Plate	
13	9001542	Pressure Switch Elbow	
14	9001496	Hose Barb	
15	223/00333/00	Pressure Hose	
16	223/00173/10	Pressure Switch Hose Tee	
17	9001564	Thermostat Seal	
18	9001669	Thermostat	

info@zipnasklade.ru
8(800)500-69-51

© Copyright, Alliance Laundry Systems LLC – DO NOT COPY or TRANSMIT

Control Module Starting March 2006

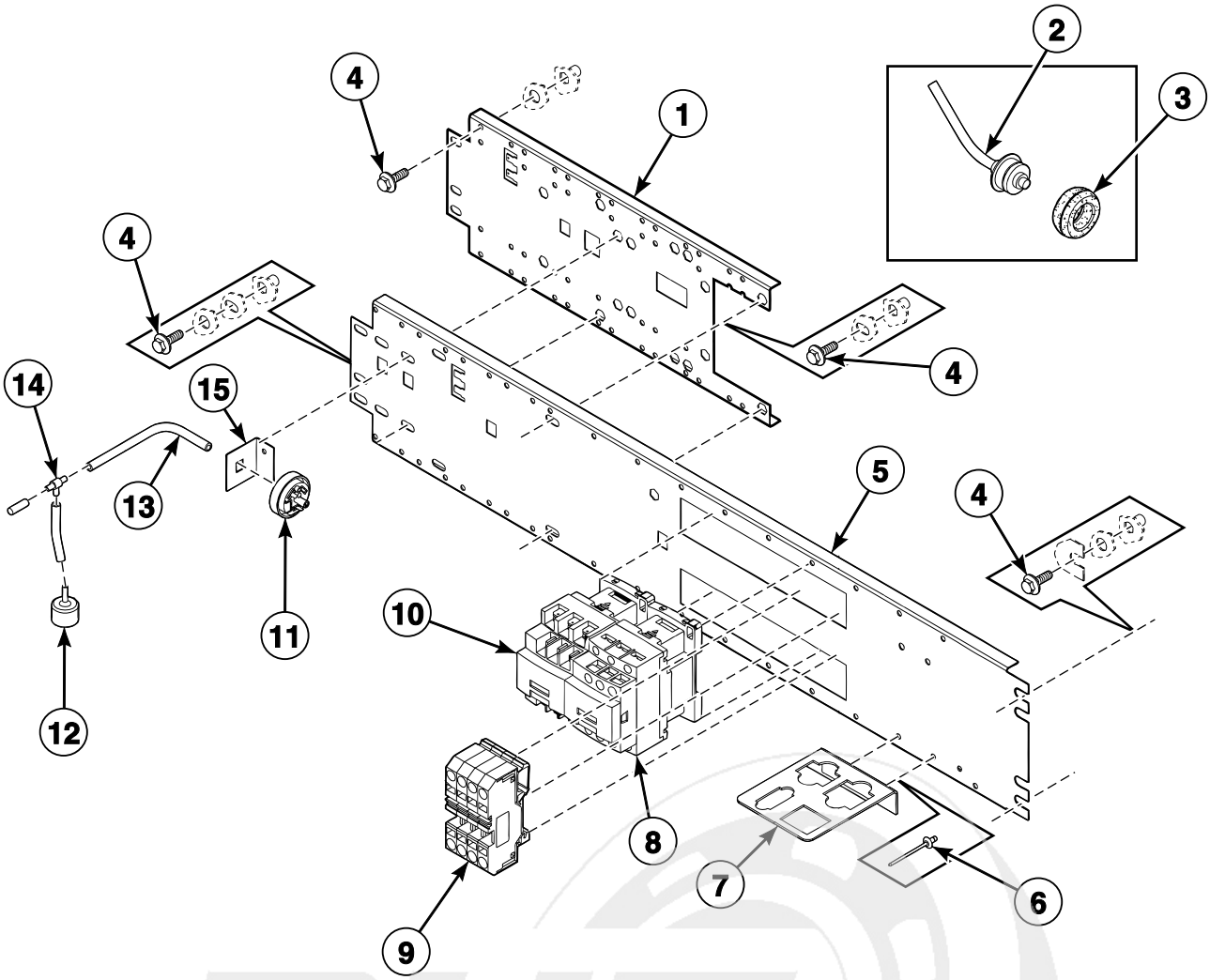

CFD198P_9001005

info@zipnasklade.ru
8(800)500-69-51

© Copyright, Alliance Laundry Systems LLC – DO NOT COPY or TRANSMIT

Control Module Starting March 2006

REF	PART NO.	DESCRIPTION	COMMENTS
1	9001958	Electrical Component Mounting Plate	
2	9001669	Thermostat	
3	9001564	Thermostat Seal	
4	9001310	Bolt	
5	9002081	Electrical Components Plate	Includes item 7
6	9002087	Screw	
7	9001960	Support Connector	
8	9002066	Contactor	Heating
9	9002021	Overload Contactor	2006-1201
	9002022	Overload Contactor	2006-1204
	9002023	Overload Contactor	2006-1304
	9002024	Overload Contactor	2006-1301
	9002025	Overload Contactor	2010-1201
	9002026	Overload Contactor	2010-1204
	9002027	Overload Contactor	2010-1301
10	9001352	Contactor	Heating
11	9001351	Pressure Switch	Models through 7/8/08
	209/00029/00	Water Level Switch	Models starting 7/9/08
12	9001932	Pressure Switch Cap	
13	223/00333/00	Pressure Hose	
14	223/00173/10	Pressure Switch Hose Tee	
15	9002082	Electrical Components Plate	

info@zipnasklade.ru
8(800)500-69-51

© Copyright, Alliance Laundry Systems LLC – DO NOT COPY or TRANSMIT

Front, Left Side and Upper Back Panels - 55 Pound Models Except Models UX055PVXF7, UX55PVXF6 and UX55PVXF7

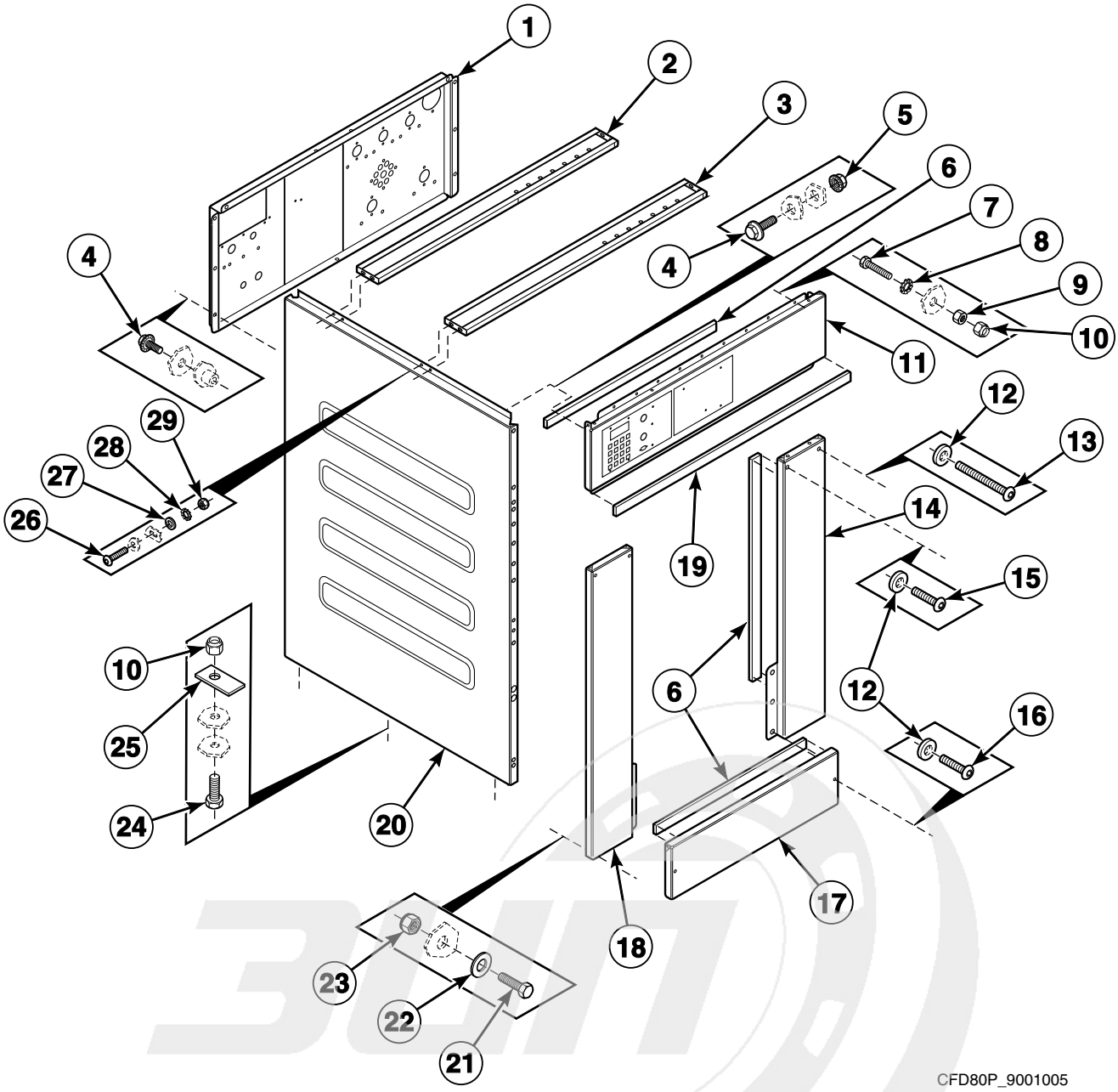

info@zipnasklade.ru
8(800)500-69-51

© Copyright, Alliance Laundry Systems LLC – DO NOT COPY or TRANSMIT

Front, Left Side and Upper Back Panels - 55 Pound Models Except Models UX055PVXF7, UX55PVXF6 and UX55PVXF7

REF	PART NO.	DESCRIPTION	COMMENTS
1	9001062	Backbridge	
2	9001076	Dispenser Rear Mounting Plate	
3	9001075	Dispenser Front Mounting Plate	
4	9001310	Bolt	
5	9001311	Nut	
6	9001608	Gasket	
7	9001273	Bolt	
8	9001241	Washer	
9	9001260	Nut	
10	9001254	Nut	
11	9001089	Control Panel	
12	9001236	Washer	
13	9001661	Screw	
14	9001671	Right Front Panel	
15	9001670	Screw	
16	9001332	Screw	
17	9001090	Kickplate	
18	9001672	Left Front Panel	
19	F0637762-00	Finger Guard Extension Assembly	
20	9001142	Side Panel	
21	9001296	Bolt	
22	9001216	Washer	
23	9001262	Nut	
24	9001275	Bolt	
25	9001037	Outlet Pipe Plate Assembly	
26	9001330	Screw	
27	9001229	Washer	
28	9001243	Washer	
29	9001252	Nut	

info@zipnasklade.ru
8(800)500-69-51

© Copyright, Alliance Laundry Systems LLC – DO NOT COPY or TRANSMIT

Front, Left Side and Upper Back Panels - Models UX055PVXF7, UX55PVXF6 and UX55PVXF7

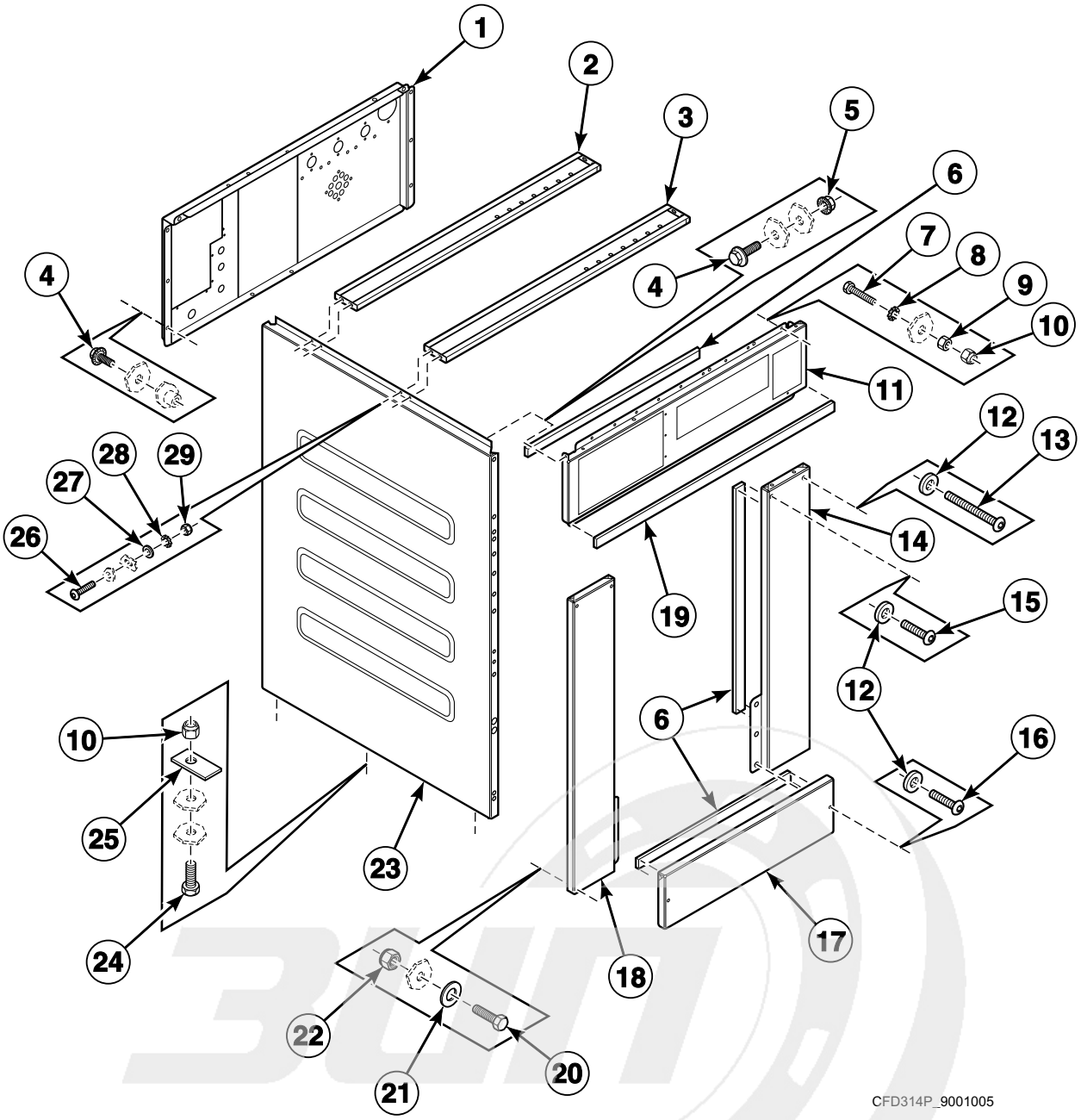

info@zipnasklade.ru
8(800)500-69-51

© Copyright, Alliance Laundry Systems LLC – DO NOT COPY or TRANSMIT

Front, Left Side and Upper Back Panels - Models UX055PVXF7, UX55PVXF6 and UX55PVXF7

REF	PART NO.	DESCRIPTION	COMMENTS
1	111/10303/00	Backbridge	
2	9001076	Dispenser Rear Mounting Plate	
3	9001075	Dispenser Front Mounting Plate	
4	9001310	Bolt	
5	9001311	Nut	
6	9001608	Gasket	
7	9001273	Bolt	
8	9001241	Washer	
9	9001260	Nut	
10	9001254	Nut	
11	111/10302/00	Control Panel	
12	9001236	Washer	
13	9001661	Screw	
14	9001671	Right Front Panel	
15	9001670	Screw	
16	9001332	Screw	
17	9001090	Kickplate	
18	9001672	Left Front Panel	
19	F0637762-00	Finger Guard Extension Assembly	
20	9001296	Bolt	
21	9001216	Washer	
22	9001262	Nut	
23	9001142	Side Panel	
24	9001275	Bolt	
25	9001037	Outlet Pipe Plate Assembly	
26	9001330	Screw	
27	9001229	Washer	
28	9001243	Washer	
29	9001252	Nut	

info@zipnasklade.ru
8(800)500-69-51

© Copyright, Alliance Laundry Systems LLC – DO NOT COPY or TRANSMIT

Front, Left Side and Upper Back Panels - 75 Pound Models Through 9/30/08

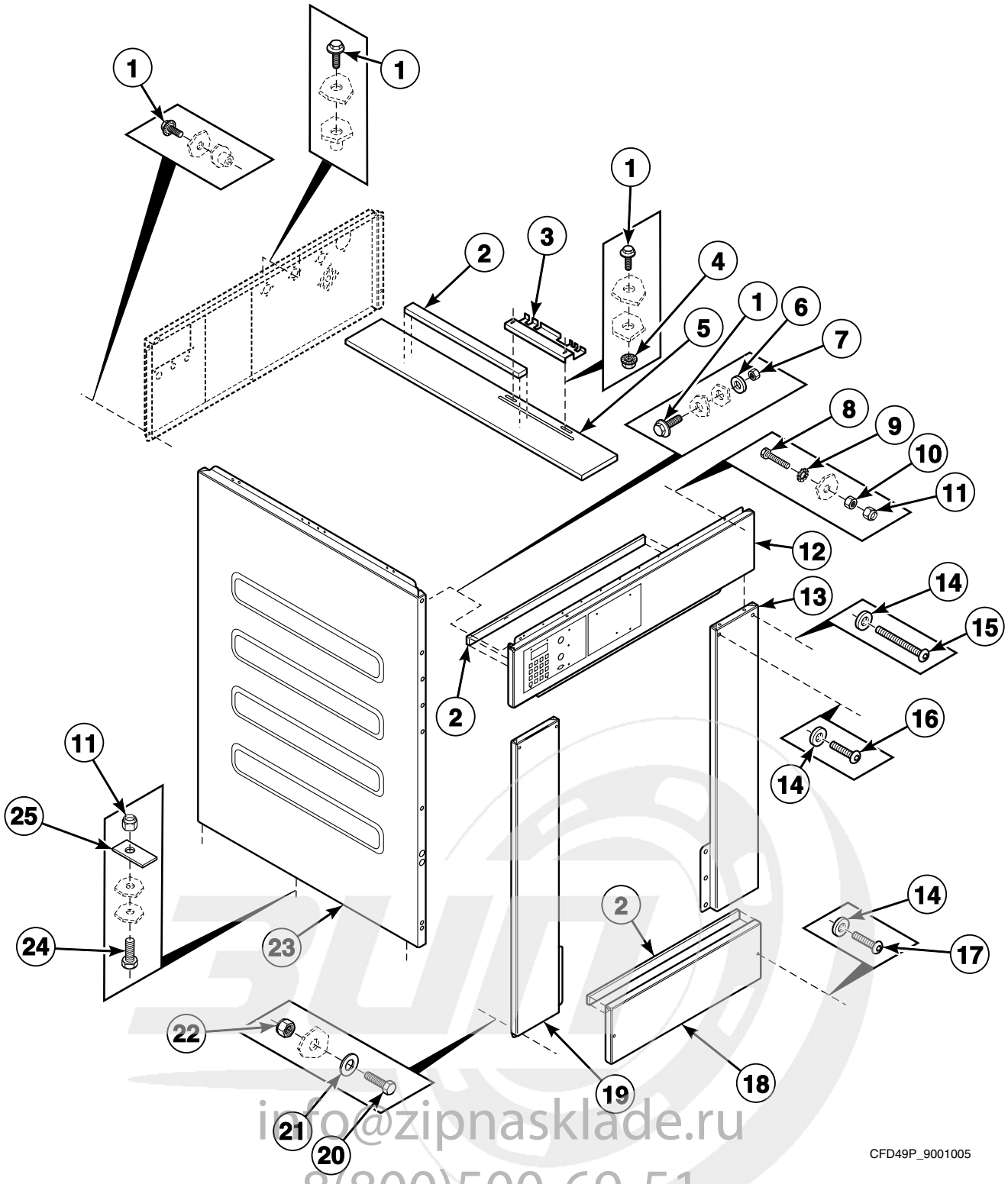

info@zipnasklade.ru
8(800)500-69-51

© Copyright, Alliance Laundry Systems LLC – DO NOT COPY or TRANSMIT

Front, Left Side and Upper Back Panels - 75 Pound Models Through 9/30/08

REF	PART NO.	DESCRIPTION	COMMENTS
1	9001310	Bolt	
2	9001608	Gasket	
3	9001044	Soap Box Support Plate	
4	9001311	Nut	
5	9001054	Dispenser Mounting Plate	
6	9001213	Washer	
7	9001250	Nut	
8	9001273	Bolt	
9	9001241	Washer	
10	9001260	Nut	
11	9001254	Nut	
12	9001068	Control Panel	
13	9001676	Right Front Panel	
14	9001236	Washer	
15	9001661	Screw	
16	9001670	Screw	
17	9001332	Screw	
18	9001090	Kickplate	
19	9001677	Left Front Panel	
20	9001296	Bolt	
21	9001216	Washer	
22	9001262	Nut	
23	9001135	Side Panel	
24	9001275	Bolt	
25	9001037	Outlet Pipe Plate Assembly	

info@zipnasklade.ru
8(800)500-69-51

© Copyright, Alliance Laundry Systems LLC – DO NOT COPY or TRANSMIT

Front, Left Side and Upper Back Panels - 75 Pound
Models Starting 10/1/08 Through 11/13/11

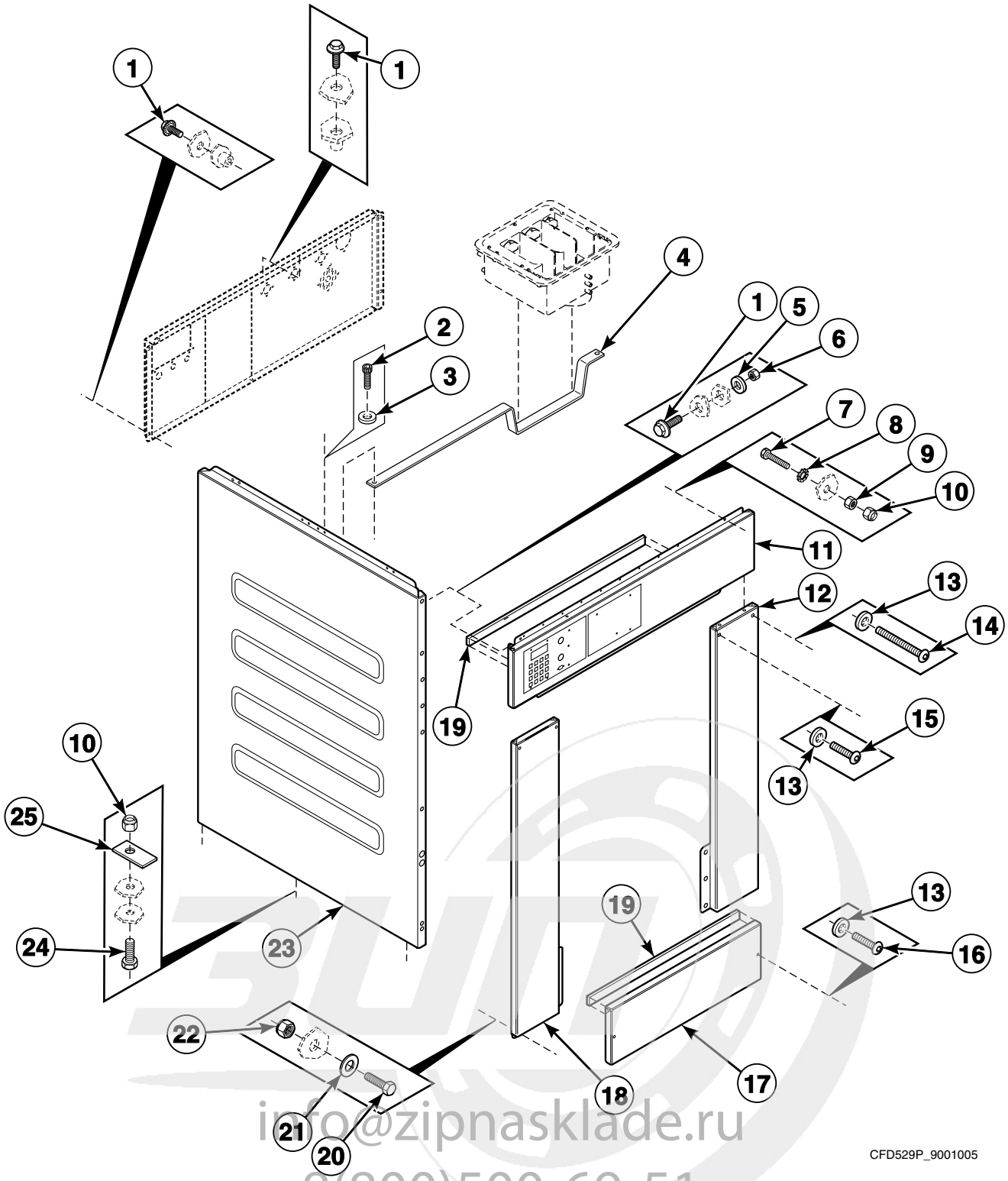

info@zipnasklade.ru
8(800)500-69-51

© Copyright, Alliance Laundry Systems LLC – DO NOT COPY or TRANSMIT

Front, Left Side and Upper Back Panels - 75 Pound
Models Starting 10/1/08 Through 11/13/11

REF	PART NO.	DESCRIPTION	COMMENTS
1	9001310	Bolt	
2	206/00166/00	Screw	
3	B12421401	Washer	
4	111/00207/11	Support Bracket	
5	9001213	Washer	
6	9001250	Nut	
7	9001273	Bolt	
8	9001241	Washer	
9	9001260	Nut	
10	9001254	Nut	
11	9001068	Control Panel	
12	9001676	Right Front Panel	
13	9001236	Washer	
14	9001661	Screw	
15	9001670	Screw	
16	9001332	Screw	
17	9001090	Kickplate	
18	9001677	Left Front Panel	
19	9001608	Gasket	
20	9001296	Bolt	
21	9001216	Washer	
22	9001262	Nut	
23	9001135	Side Panel	
24	9001275	Bolt	
25	9001037	Outlet Pipe Plate Assembly	

info@zipnasklade.ru
8(800)500-69-51

© Copyright, Alliance Laundry Systems LLC – DO NOT COPY or TRANSMIT

Front, Left Side and Upper Back Panels - 75 Pound
Models Starting 11/14/11

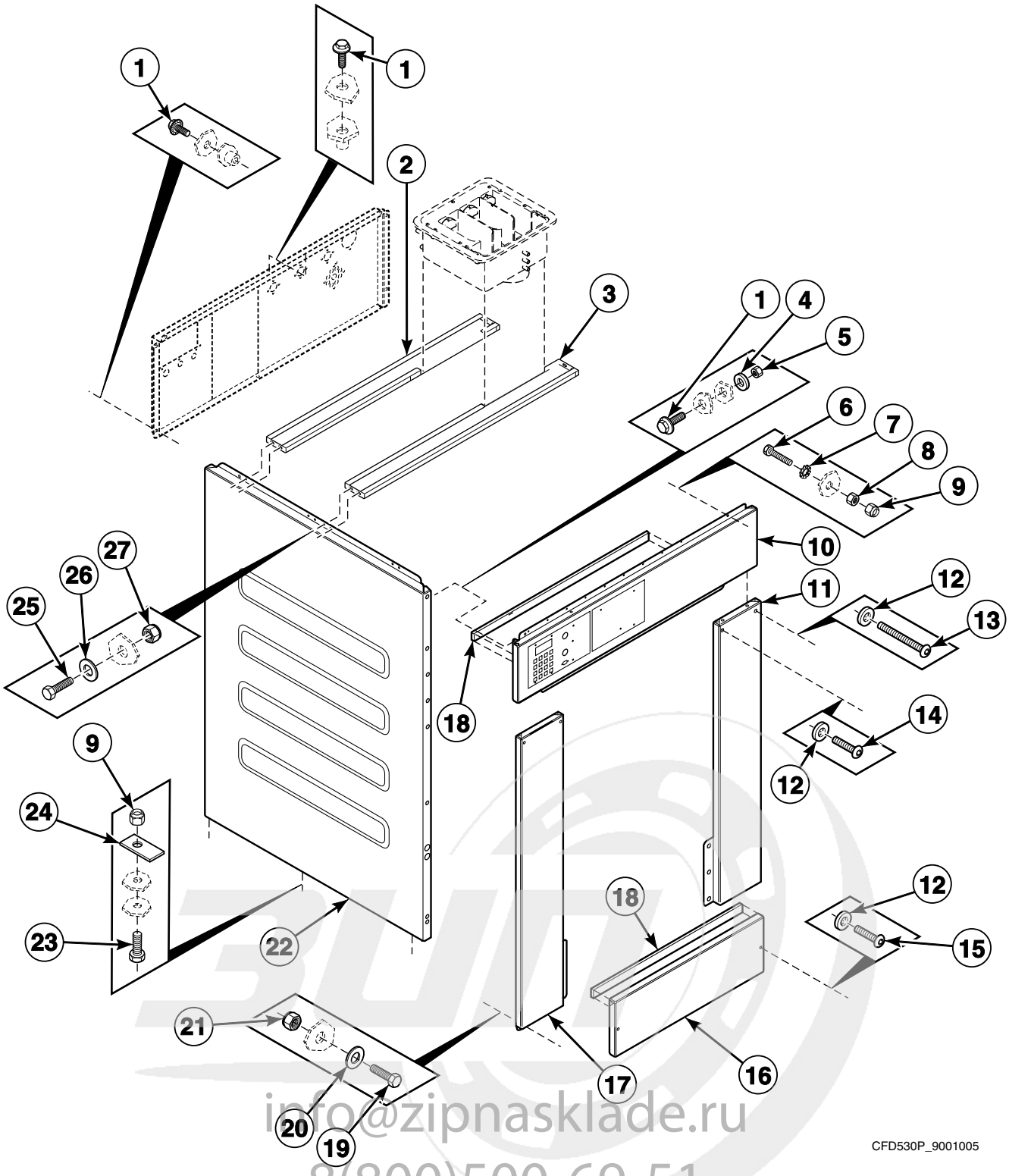

info@zipnasklade.ru
8(800)500-69-51

© Copyright, Alliance Laundry Systems LLC – DO NOT COPY or TRANSMIT

Front, Left Side and Upper Back Panels - 75 Pound Models Starting 11/14/11

REF	PART NO.	DESCRIPTION	COMMENTS
1	9001310	Bolt	
2	B12456101	Support Bracket	Rear
3	B12456201	Support Bracket	Front
4	9001213	Washer	
5	9001250	Nut	
6	9001273	Bolt	
7	9001241	Washer	
8	9001260	Nut	
9	9001254	Nut	
10	9001068	Control Panel	
11	9001676	Right Front Panel	
12	9001236	Washer	
13	9001661	Screw	
14	9001670	Screw	
15	9001332	Screw	
16	9001090	Kickplate	
17	9001677	Left Front Panel	
18	9001608	Gasket	
19	9001296	Bolt	
20	9001216	Washer	
21	9001262	Nut	
22	9001135	Side Panel	
23	9001275	Bolt	
24	9001037	Outlet Pipe Plate Assembly	
25	9001292	Bolt	
26	9001229	Washer	
27	9001267	Nut	

info@zipnasklade.ru
8(800)500-69-51

© Copyright, Alliance Laundry Systems LLC – DO NOT COPY or TRANSMIT

Top, Right Side and Lower Back Panels - Models UX055PVXF7, UX55PVXF6 and UX55PVXF7

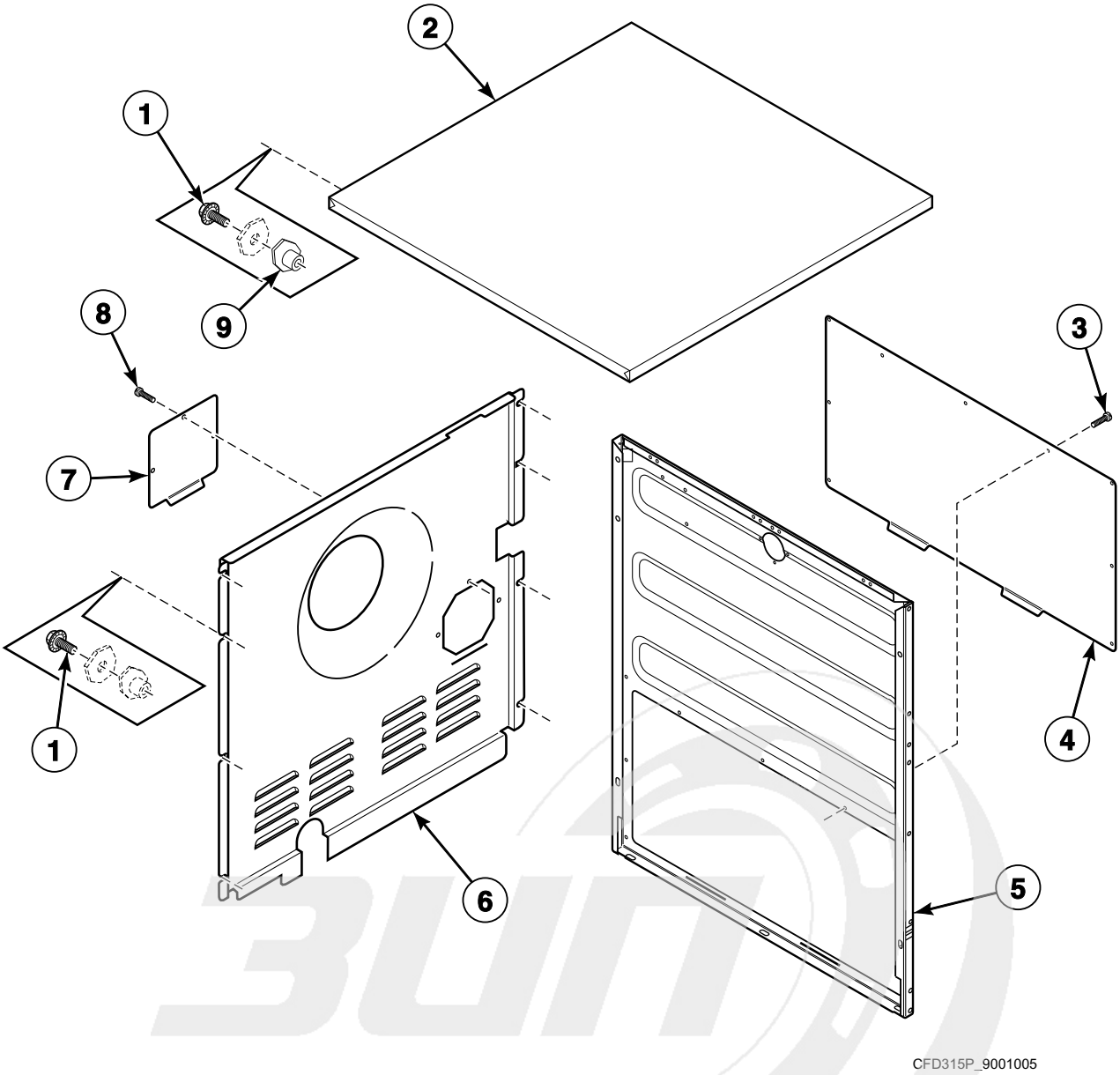

info@zipnasklade.ru
8(800)500-69-51

© Copyright, Alliance Laundry Systems LLC – DO NOT COPY or TRANSMIT

Top, Right Side and Lower Back Panels - Models UX055PVXF7, UX55PVXF6 and UX55PVXF7

REF	PART NO.	DESCRIPTION	COMMENTS
1	9001310	Bolt	
2	111/10304/00	Top Panel	
3	206/00104/00	Screw	
4	111/10316/00	Side Panel Cover	
5	111/10301/00	Right Side Panel	
6	111/10308/00	Rear Panel	
7	111/10315/00	Cover	
8	206/00099/00	Bolt	

info@zipnasklade.ru
8(800)500-69-51

© Copyright, Alliance Laundry Systems LLC – DO NOT COPY or TRANSMIT

Top, Right Side and Lower Back Panels - All Models Except UX055PVXF7, UX55PVXF6 and UX55PVXF7

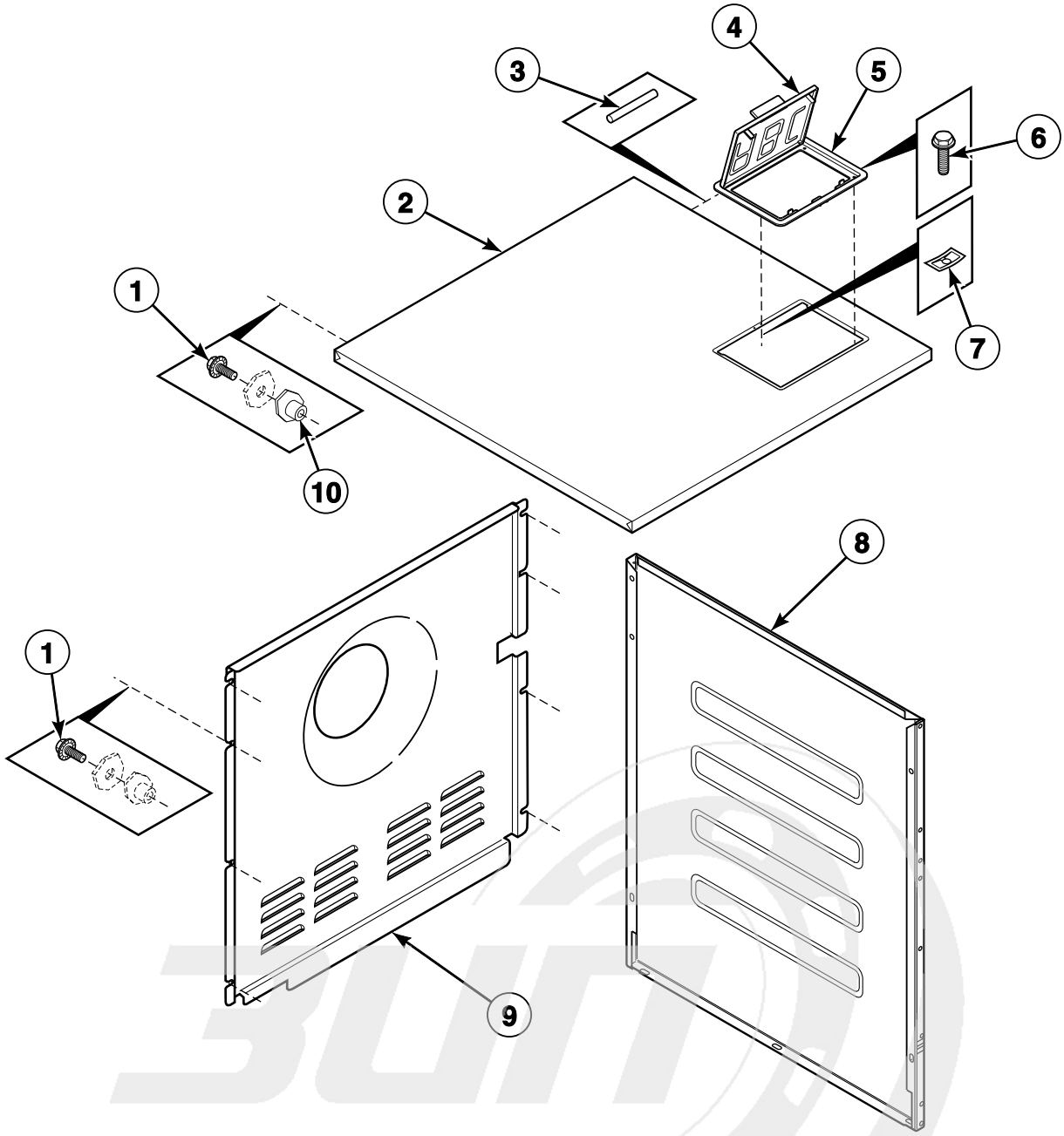

CFD40P_9001005

info@zipnasklade.ru
8(800)500-69-51

© Copyright, Alliance Laundry Systems LLC – DO NOT COPY or TRANSMIT

Top, Right Side and Lower Back Panels - All Models Except UX055PVXF7, UX55PVXF6 and UX55PVXF7

REF	PART NO.	DESCRIPTION	COMMENTS
1	9001310	Bolt	
2	9001145	Top Panel	55 pound models
	9001067	Top Panel	75 pound models
3	9001516	Soap Dispenser Cover Hinge Rod	2 required
4	9001514	Soap Dispenser Cover	
5	9001515	Soap Dispenser Frame	
6	9001342	Bolt	
7	9001349	Nut	
8	9001142	Side Panel	55 pound models
	9001135	Side Panel	75 pound models
9	9001046	Rear Panel	55 pound models
	9001045	Rear Panel	75 pound models
10	9001271	Bushing	

info@zipnasklade.ru
8(800)500-69-51

© Copyright, Alliance Laundry Systems LLC – DO NOT COPY or TRANSMIT

Fill Plumbing - Models UX055PVXF7, UX55PVXF6 and UX55PVXF7

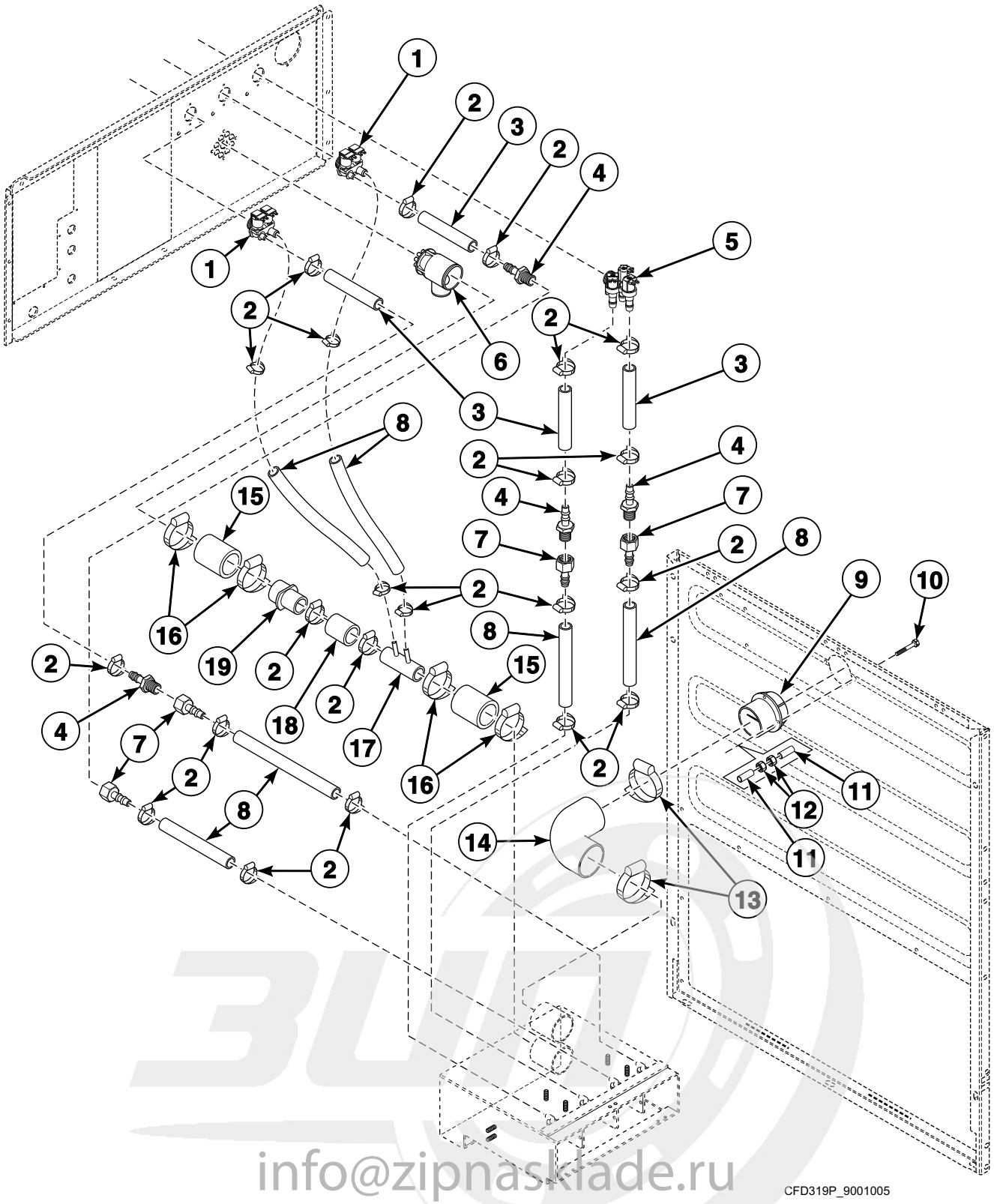

info@zipnasklade.ru
8(800)500-69-51

© Copyright, Alliance Laundry Systems LLC – DO NOT COPY or TRANSMIT

Fill Plumbing - Models UX055PVXF7, UX55PVXF6 and UX55PVXF7

REF	PART NO.	DESCRIPTION	COMMENTS
	G582P3	Diaphragm and Guide Kit	Use with F0381737-00P 3-Way Valve
1	9001377	2-Way Inlet Valve	Used with F380939 Valve Repair Kit
	223/00367/00	Flow Restrictor	
2	223/00009/00	Clamp	
3	9001498	Water Hose	
4	223/00360/60	Coupling	
5	F0381737-00	3-Way Valve	
	223/00367/00	Flow Restrictor	
6	9001550	Liquid Soap Manifold	
7	223/00360/50	Coupling	
8	223/00360/00	Hose	
9	9001510	Hose Vent	
10	107/00136/00	Screw	
11	211/00147/00	Standoff	
12	204/00114/00	Nut	
13	9001495	Hose Clamp	
14	223/00359/00	Hose	
15	223/00059/00	Water Hose	
16	223/00010/00	Hose Clamp	
17	F0638025-00	Fill Inlet Tube	
18	F200107P	Water Hose	
19	F130315	Bushing	

info@zipnasklade.ru
8(800)500-69-51

© Copyright, Alliance Laundry Systems LLC – DO NOT COPY or TRANSMIT

Fill Plumbing - All Models Except UX055PVXF7, UX55PVXF6 and UX55PVXF7

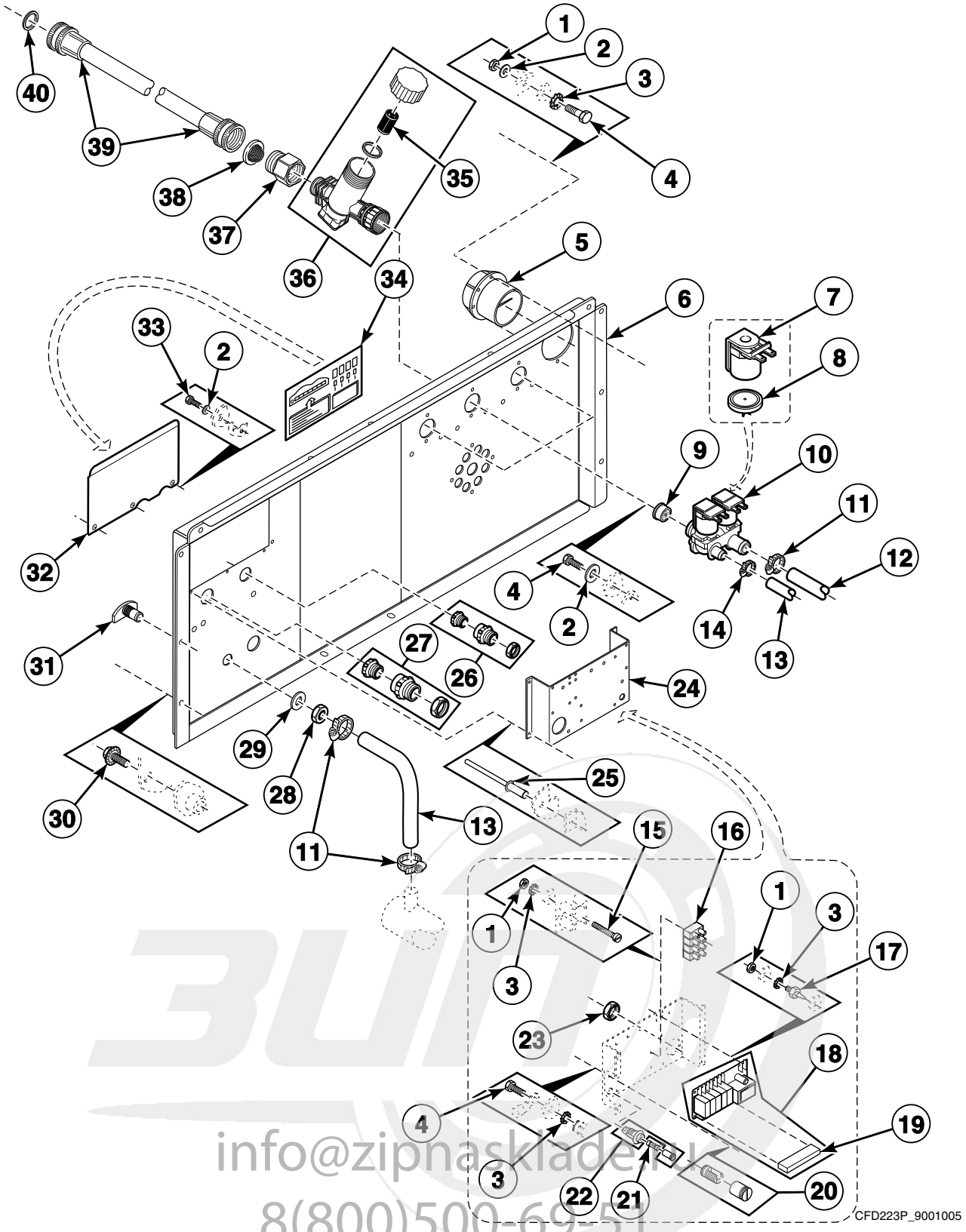

info@zipnaskladem.ru
8(800)500-69-51

© Copyright, Alliance Laundry Systems LLC – DO NOT COPY or TRANSMIT

Fill Plumbing - All Models Except UX055PVXF7, UX55PVXF6 and UX55PVXF7

REF	PART NO.	DESCRIPTION	COMMENTS
1	9001252	Nut	
2	9001229	Washer	
3	9001243	Washer	
4	9001292	Bolt	
5	9001510	Hose Vent	
6	9001062	Backbridge	55 pound models; Models through Serial No. 0605755252
	N/A	Backbridge	75 pound models; Models through Serial No. 0605775058
7	9001753	Inlet Valve Solenoid	
8	9001743	Diaphragm	
9	F200052400	Inlet Valve Restrictor	Cold water valve
	223/00390/00	Flow Restrictor	Hot water valve
10	9001377	2-Way Inlet Valve	Standard thread; 3 required; Used with F380939 Valve Repair Kit
	209/00316/00	2-Way Inlet Valve	Metric thread; 3 required; Used with F380939 Valve Repair Kit
11	9001492	Hose Clamp	
12	9001500	Water Hose	
13	9001498	Water Hose	
14	F200205	Hose Clamp	No. 10
15	9001329	Screw	
16	9001354	Terminal Block	
17	9001429	Standoff	
18	9001366	Soap Injection PCB with Fuse	Includes item 19
19	9001888	Connector	
20	9001350	Ground Terminal	
21	9001384	Fuse	
22	9001364	Fuse Holder	
23	9001539	Grommet	
24	9001040	Electrical Connection Plate	
25	9001346	Rivet	
26	9001431	Cordlock	PE16
27	9001432	Cordlock	PG21
28	9001270	Nut	
29	9001209	Washer	
30	9001310	Bolt	
31	9001487	Prewash and Mainwash Nozzle	
32	9001040	Electrical Connection Plate	
33	9001279	Bolt	
34	9001594	Electrical Connection Sticker	
35	209/00385/01	Filter	
36	209/00385/00	Filter	
37	223/00050/01	Water Valve Adapter	Converts from metric to standard thread
38	803615	Washer	
39	F200164	Water Hose	Standard thread
	F200166	Water Hose	Metric thread
40	20290	Washer	

N/A = Part no longer available

info@zipnasklade.ru
8(800)500 69 51

© Copyright, Alliance Laundry Systems LLC – DO NOT COPY or TRANSMIT

Upper Back Panel - 55 Pound Models

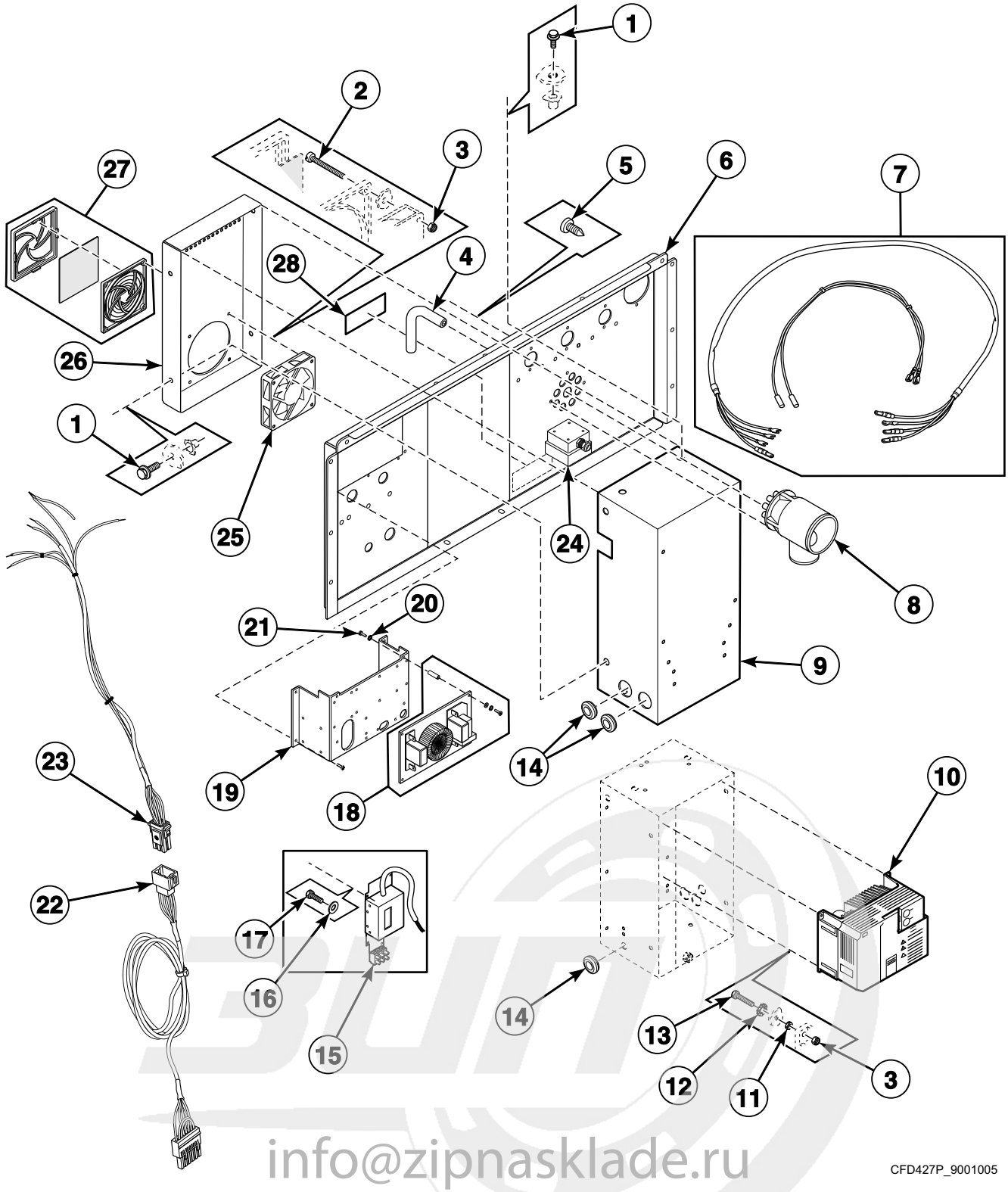

info@zipnasklade.ru
8(800)500-69-51

© Copyright, Alliance Laundry Systems LLC – DO NOT COPY or TRANSMIT

Upper Back Panel - 55 Pound Models

REF	PART NO.	DESCRIPTION	COMMENTS
	9001011	Parameter Unit Assembly	Includes 9001011 Parameter Unit Assembly and 9001895 Parameter Unit Program Cable; Hand held
	F8410901	Parameter Unit Assembly	Used with 500-series inverter drives; Mounts to the inverter drive
1	9001310	Bolt	
2	9001317	Bolt	
3	9001267	Nut	
4	9001531	Pressure Hose	
5	B12350903	Screw	
6	9001062	Backbridge	Models through Serial No. 0605755252
7	9002078	Inverter to Motor Harness	
8	9001550	Liquid Soap Manifold	
9	9001060	Inverter Drive Box	
10	227/00238/00	Inverter	N-voltage; 440-480 Volt/3 Phase, 2.2 kW; 500-series
	9002035	Inverter Fan	
	F8421105	Drive	Q and X-voltage; 700-series; Used with models with V-belts
	F8421107	Drive	Q and X-voltage; 700-series; Used with models with flat belts
	F8421106	Drive	N and P-voltage; 700-series; Used with models with V-belts
	F8421108	Drive	N and P-voltage; 700-series; Used with models with flat belts
	F8421005	Inverter Kit	Q and X-voltage; 700-series; Used with models with V-belts; Includes F8421105 Drive
	F8421007	Inverter Kit	Q and X-voltage; 700-series; Used with models with flat belts; Includes F8421107 Drive
	F8421006	Inverter Kit	N and P-voltage; 700-series; Used with models with V-belts; Includes F8421106 Drive, F8409501 Mounting Plate Assembly and F430903 Screw
	F8421008	Inverter Kit	N and P-voltage; 700-series; Used with models with flat belts; Includes F8421108 Drive, F8409501 Mounting Plate Assembly and F430903 Screw
11	9001252	Nut	
12	9001242	Washer	
13	9001278	Bolt	
14	9001530	Grommet	
15	9001593	Noise Filter	
16	9001229	Washer	
17	9001323	Screw	
18	210/00027/UL00	Filter	16A1; Standard; Models starting 1/8/04
	9001899	Filter	45A1; 220 Volt/1 Phase models with electric heat; Models starting 1/8/04
	227/00242/00	Noise Filter	16A3; 220 Volt/3 Phase, 4.2 and 6 kW models with electric heat; Models starting 1/8/04
	9001898	Filter	40A3; 400 Volt/3 Phase, 9 kW models with electric heat; Models starting 1/8/04
19	9001952	Electrical Connection Plate	Models through Serial No. 0605755252
20	9001243	Washer	
21	9001292	Bolt	
22	9001905	Micro to Connector Harness	From the main control to the inverter drive; Requires the inverter jumper be in the “source” position
23	9001904	Connector to Inverter Harness	From the main control to the inverter drive
24	9001986	Transformer	N-voltage
25	9001375	Cooling Fan	
26	F200167500	AC Drive Cover	
27	9001376	Fan Grill	Models through 10/5/08
	209/00287/11	AC Drive Filter	Models starting 10/6/08
28	B12355001	Voltage Discharge Decal	

info@zippackbde.ru
8(800)500-69-51

© Copyright, Alliance Laundry Systems LLC – DO NOT COPY or TRANSMIT

Upper Back Panel - 75 Pound Models

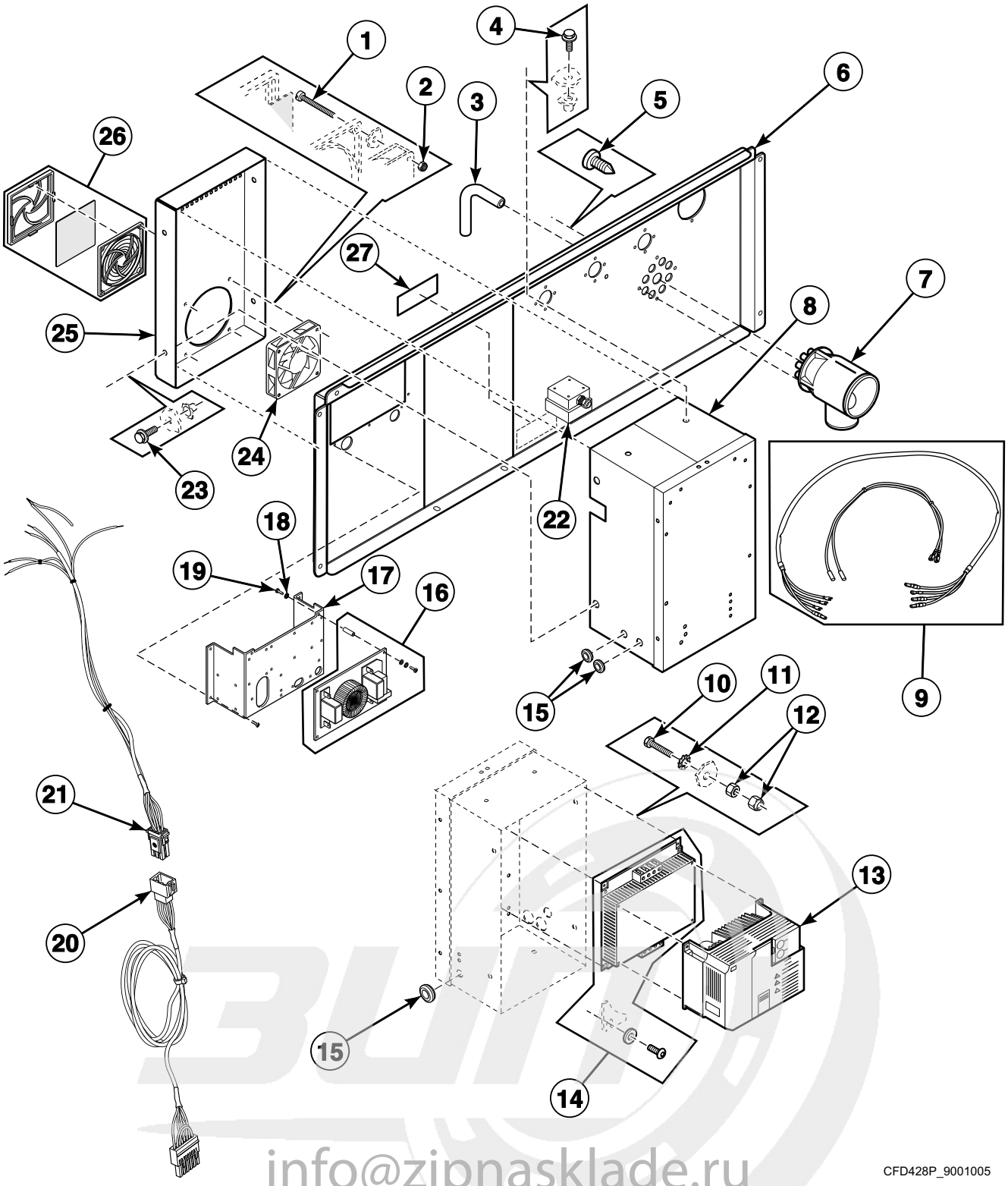

info@zipnasklade.ru
8(800)500-69-51

© Copyright, Alliance Laundry Systems LLC – DO NOT COPY or TRANSMIT

Upper Back Panel - 75 Pound Models

REF	PART NO.	DESCRIPTION	COMMENTS
	9001011	Parameter Unit Assembly	Includes 9001011 Parameter Unit Assembly and 9001895 Parameter Unit Program Cable; Hand held
	F8410901	Parameter Unit Assembly	Used with 500-series inverter drives; Mounts to the inverter drive
1	9001317	Bolt	
2	9001267	Nut	
3	9001531	Pressure Hose	
4	9001310	Bolt	
5	B12350903	Screw	
6	9002092	Backbridge	Models through Serial No. 0605775058
7	9001550	Liquid Soap Manifold	
8	9001059	Inverter Drive Box	
9	210/38729UL/15	Inverter to Motor Harness	
10	9001278	Bolt	
11	9001242	Washer	
12	9001261	Nut	
13	227/00224/00	Inverter	Q-voltage; 3.7 kW; 3 x 240 Volt; 500-series
	9001586	Inverter	N and P-voltage; 3.7 kW; 3 x 380 Volt; 500-series
	9002035	Inverter Fan	
	F8421109	Drive	Q-voltage; 700-series; Used with models with V-belts
	F8421111	Drive	Q-voltage; 700-series; Used with models with flat belts
	F8421110	Drive	N and P-voltage; 700-series; Used with models with V-belts
	F8421112	Drive	N and P-voltage; 700-series; Used with models with flat belts
	F8421009	Inverter Kit	Q-voltage; 700-series; Used with models with V-belts; Includes F8421109 Drive
	F8421011	Inverter Kit	Q-voltage; 700-series; Used with models with flat belts; Includes F8421111 Drive
	F8421010	Inverter Kit	N and P-voltage; 700-series; Used with models with V-belts; Includes F8421110 Drive, F8409501 Mounting Plate Assembly and F430903 Screw
	F8421012	Inverter Kit	N and P-voltage; 700-series; Used with models with flat belts; Includes F8421112 Drive, F8409501 Mounting Plate Assembly and F430903 Screw
14	9001590	Noise Filter	
15	9001530	Grommet	
16	210/00027/UL00	Filter	16A1; Standard; Models starting 1/8/04
	9001899	Filter	45A1; 220 Volt/1 Phase models with electric heat; Models starting 1/8/04
	227/00242/00	Noise Filter	16A3; 220 Volt/3 Phase, 4.2 and 6 kW models with electric heat; Models starting 1/8/04
	9001898	Filter	40A3; 400 Volt/3 Phase, 9 kW models with electric heat; Models starting 1/8/04
17	9001902	Electrical Connection Plate	Models through Serial No. 0605775058
18	9001243	Washer	
19	9001292	Bolt	
20	B12371101	Micro to Connector Harness	Q-voltage; From the main control to the inverter drive; Requires the inverter jumper to be in the “sink” position
	9001905	Micro to Connector Harness	N and P-voltage; From the main control to the inverter drive; Requires the inverter jumper to be in the “source” position
21	9001904	Connector to Inverter Harness	From the main control to the inverter drive
22	9001986	Transformer	N-voltage
23	9001310	Bolt	
24	9001375	Cooling Fan	
25	9001061	Inverter Box Cover	
26	9001376	Fan Grill	Models through 10/5/08
	209/00287/11	AC Drive Filter	Models starting 10/6/08
27	B12355001	Voltage Discharge Decal	

info@zlpnasklade.ru
8(800)500-69-51

© Copyright, Alliance Laundry Systems LLC – DO NOT COPY or TRANSMIT

Upper Back Panel - 55 Pound Models Starting Serial No. 0605755253 and 75 Pound Models Starting Serial No. 060775059

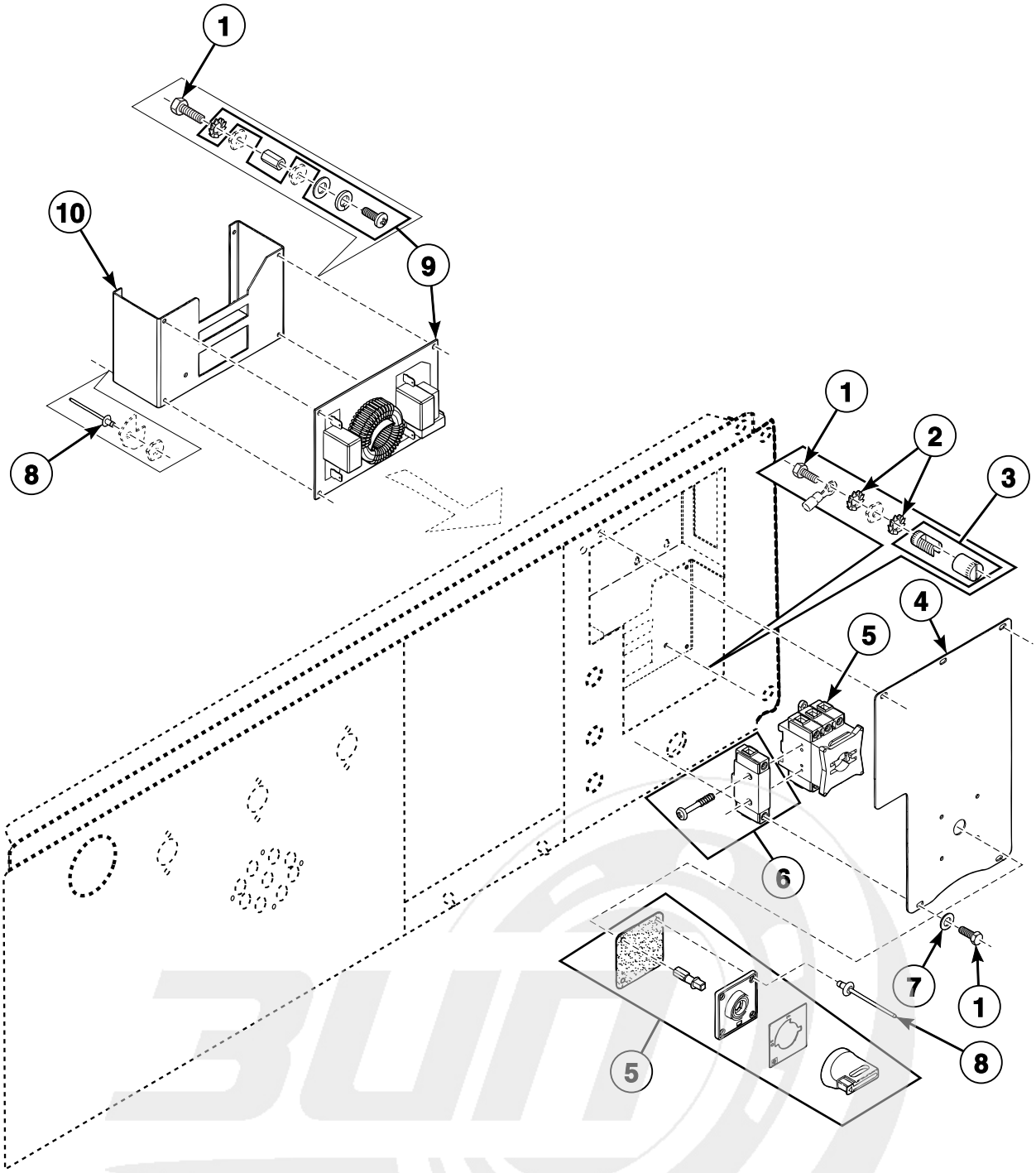

CFD200P_9001005

info@zipnasklade.ru
8(800)500-69-51

© Copyright, Alliance Laundry Systems LLC – DO NOT COPY or TRANSMIT

Upper Back Panel - 55 Pound Models Starting Serial No. 0605755253 and 75 Pound Models Starting Serial No. 060775059

REF	PART NO.	DESCRIPTION	COMMENTS
1	9001292	Bolt	
2	9001243	Washer	
3	9001350	Ground Terminal	
4	9002088	Main Switch Cover	
5	9001390	Main Switch	Standard and steam heat
	9002089	Main Switch	Electric heat; 40 A
	9001387	Main Switch	Electric heat; 80 A
6	9001391	Neutral Terminal Block	25 A VZ-11
	9001388	Neutral Terminal Block	63/80 A VZ-12
7	9001229	Washer	
8	9001346	Rivet	
9	210/00027/UL00	Filter	16A1; Standard; Models starting 1/8/04
	9001899	Filter	45A1; 220 Volt/1 Phase models with electric heat; Models starting 1/8/04
	9001897	Filter	16A3; 220 Volt/3 Phase, 4.2 and 6 kW models with electric heat; Models starting 1/8/04
	9001898	Filter	40A3; 220 Volt/3 Phase, 9 kW models with electric heat; Models starting 1/8/04
10	9002090	Filter Bracket	

info@zipnasklade.ru
8(800)500-69-51

© Copyright, Alliance Laundry Systems LLC – DO NOT COPY or TRANSMIT

Balance Switch

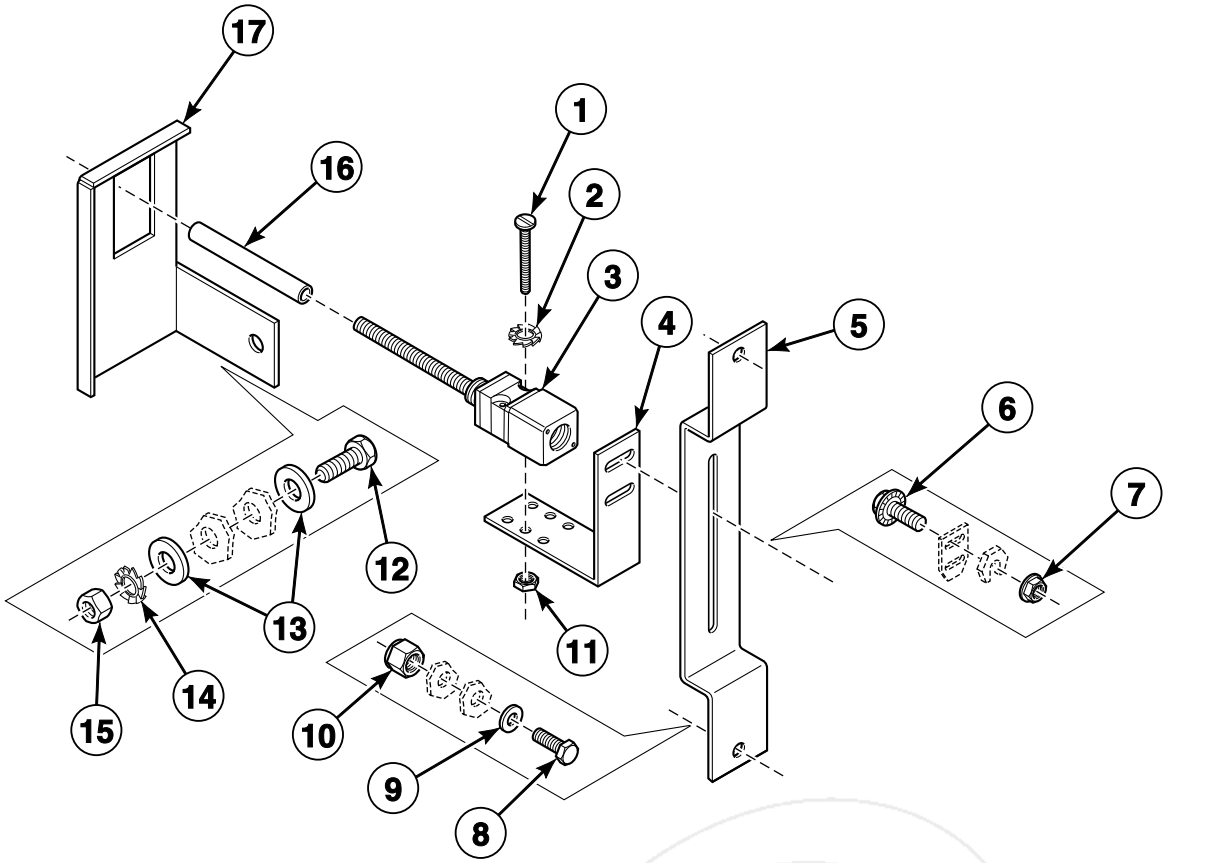

CFD28P_9001005

info@zipnasklade.ru
8(800)500-69-51

© Copyright, Alliance Laundry Systems LLC – DO NOT COPY or TRANSMIT

Balance Switch

REF	PART NO.	DESCRIPTION	COMMENTS
1	9001325	Screw	
2	9001243	Washer	
3	9001369	Out-of-Balance Switch	
4	9001041	Tilt Switch Bracket	
5	9001056	Out-of-Balance Switch Bracket	
6	9001310	Bolt	
7	9001311	Nut	
8	9001277	Bolt	
9	9001230	Washer	
10	9001254	Nut	
11	9001252	Nut	
12	9001287	Bolt	
13	9001216	Washer	
14	9001240	Washer	
15	9001249	Nut	
16	9001766	Out-of-Balance Switch Boot	
17	B12485001	Tilt Detector Plate	

info@zipnasklade.ru
8(800)500-69-51

© Copyright, Alliance Laundry Systems LLC – DO NOT COPY or TRANSMIT

Supply Dispenser - Models UX055PVXF7, UX55PVXF6 and UX55PVXF7

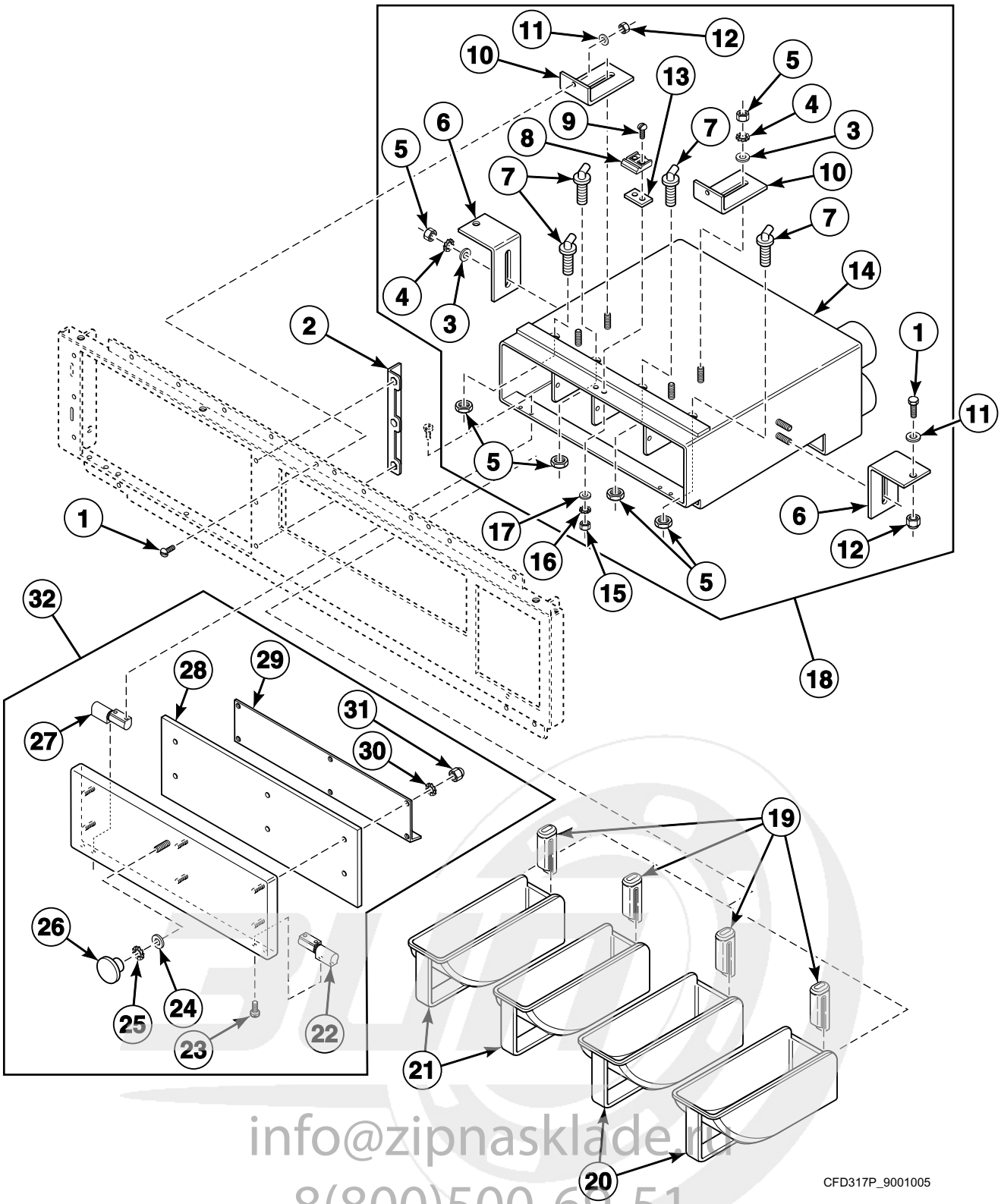

info@zipnasklade.ru
8(800)500-69-51

© Copyright, Alliance Laundry Systems LLC – DO NOT COPY or TRANSMIT

Supply Dispenser - Models UX055PVXF7, UX55PVXF6 and UX55PVXF7

REF	PART NO.	DESCRIPTION	COMMENTS
1	F430939	Screw	
2	111/10310/02	Control Module Wrap Brace	
3	F431147	Washer	
4	F430322	Washer	
5	F431005	Nut	
6	F0609664-00	Supply Dispenser Mounting Bracket	
7	F8322001	Injection Nozzle	
8	F432223	Supply Dispenser Lid Latch	
9	F430909	Screw	
10	F0637866-00	Supply Dispenser Mounting Bracket	
11	F431147	Washer	
12	F431024	Nut	
13	111/10313/00	Dispenser Lock Plate	
14	F0637862-00	Supply Dispenser Weldment	
15	F431000	Nut	
16	F431106	Washer	
17	F431133	Washer	
18	F0637838-00	Supply Dispenser Assembly	Includes items 3-17
19	F150390	Siphon Tube	
20	F150369	Supply Dispenser Cup	32 oz.
21	F150368	Supply Dispenser Cup	20 oz.
22	F190202P	Lift-Off Hinge	
23	F430903	Screw	
24	F431105	Washer	
25	F431137	Washer	
26	F190101	Push-Pull Knob	
27	F190205P	Lift-Off Hinge	
28	F0637836-00	Gasket Cover	
29	F0637835-00	Gasket Retaining Plate	
30	F431106	Washer	
31	F431037	Nut	
32	F0637833-00	Supply Dispenser Cover Assembly	Includes items 22-31

info@zipnasklade.ru
8(800)500-69-51

© Copyright, Alliance Laundry Systems LLC – DO NOT COPY or TRANSMIT

Supply Dispenser - All Models Except UX055PVXF7, UX55PVXF6 and UX55PVXF7

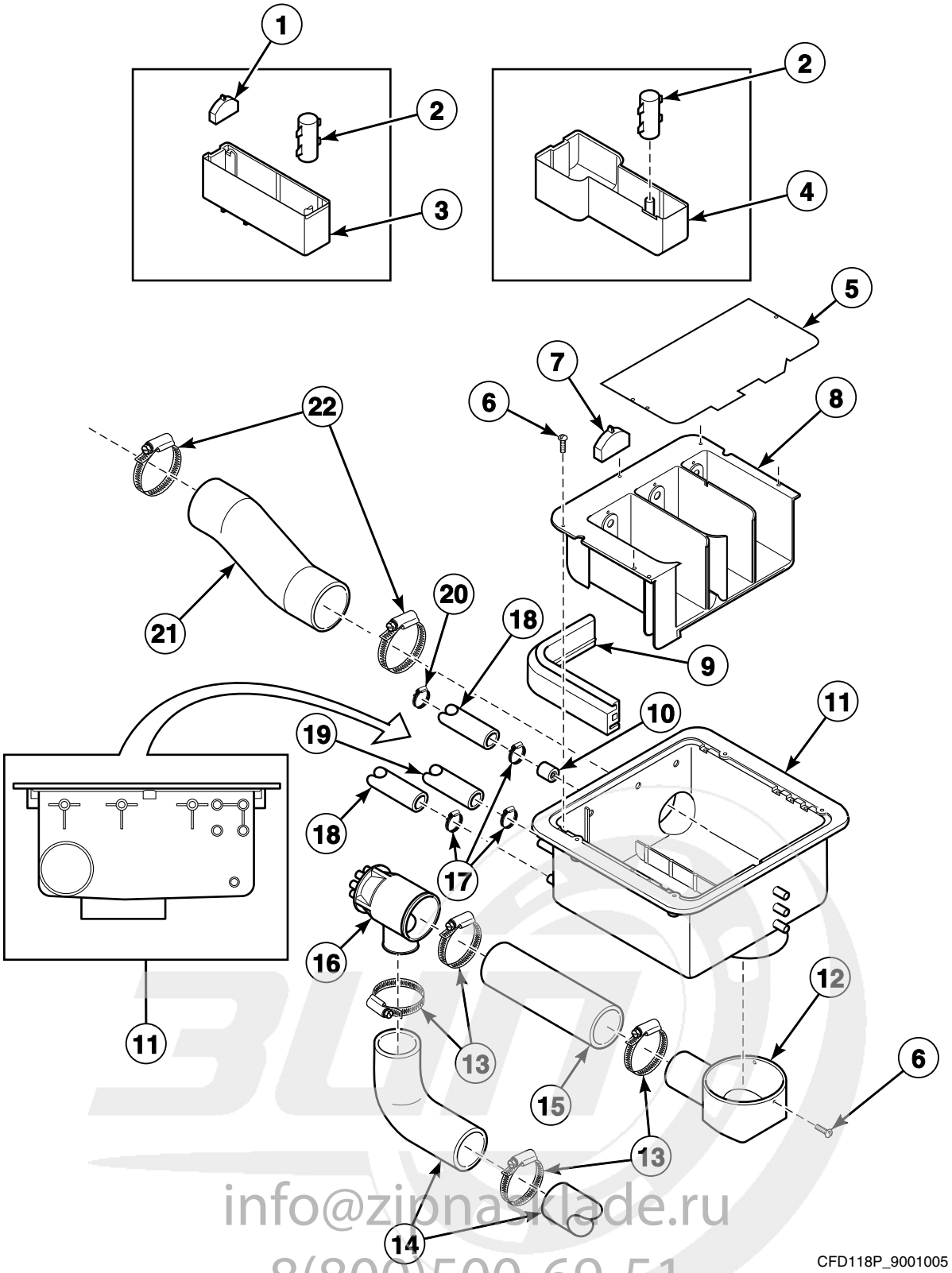

info@zipnaklade.ru
8(800)500-69-51

© Copyright, Alliance Laundry Systems LLC – DO NOT COPY or TRANSMIT

Supply Dispenser - All Models Except UX055PVXF7, UX55PVXF6 and UX55PVXF7

REF	PART NO.	DESCRIPTION	COMMENTS
1	9001508	Softener Spray Nozzle	
2	9001507	Soap Dispenser Rinse Siphon	
3	9001506	Rinse Insert	
4	9001511	Liquid Soap Dispenser Insert	
5	F200047800	Supply Deflector	
6	B12347509	Screw	
7	9001509	Soap Spray Nozzle	
8	223/00102/30	Soap Dispenser Assembly	
9	9001522	Soap Dispenser Gasket	
10	F060334200	Restrictor Assembly	
11	9001513	Dispenser Assembly	
12	9001538	Dispenser Drain Funnel	
13	9001502	Hose Clamp	
14	B12322401	Siphon Break Hose	55 pound models
	B12322402	Siphon Break Hose	75 pound models
15	9001673	Siphon Break Dispenser Hose	55 pound models
	9001678	Siphon Break Dispenser Hose	75 pound models
16	9001550	Liquid Soap Manifold	
17	F200205	Hose Clamp	No. 10
18	9001499	Water Hose	
19	9001500	Water Hose	
20	36801	Hose Clamp	No. 8
21	9001521	Vent Hose	
22	9001495	Hose Clamp	

info@zipnasklade.ru
8(800)500-69-51

© Copyright, Alliance Laundry Systems LLC – DO NOT COPY or TRANSMIT

Electric Heating Option

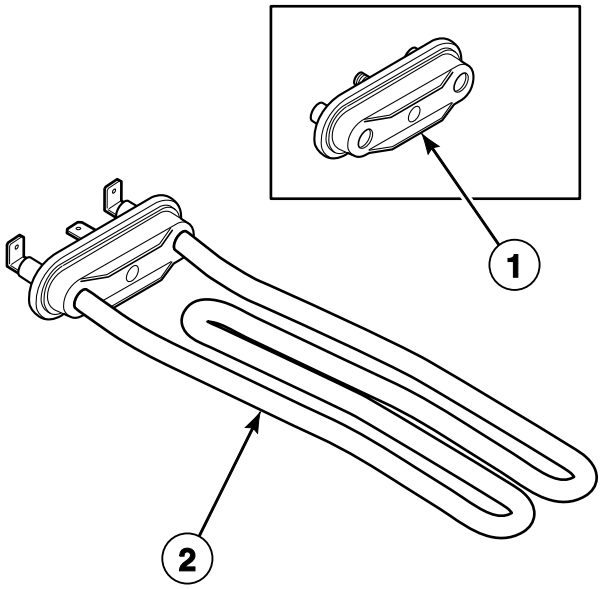

CFD81P_9001005

info@zipnasklade.ru
8(800)500-69-51

© Copyright, Alliance Laundry Systems LLC – DO NOT COPY or TRANSMIT

Electric Heating Option

REF	PART NO.	DESCRIPTION	COMMENTS
1	F360202	Heating Element Plug	
2	209/00562/20	Heating Element	3000 W

info@zipnasklade.ru
8(800)500-69-51

© Copyright, Alliance Laundry Systems LLC – DO NOT COPY or TRANSMIT

Steam Heating Option

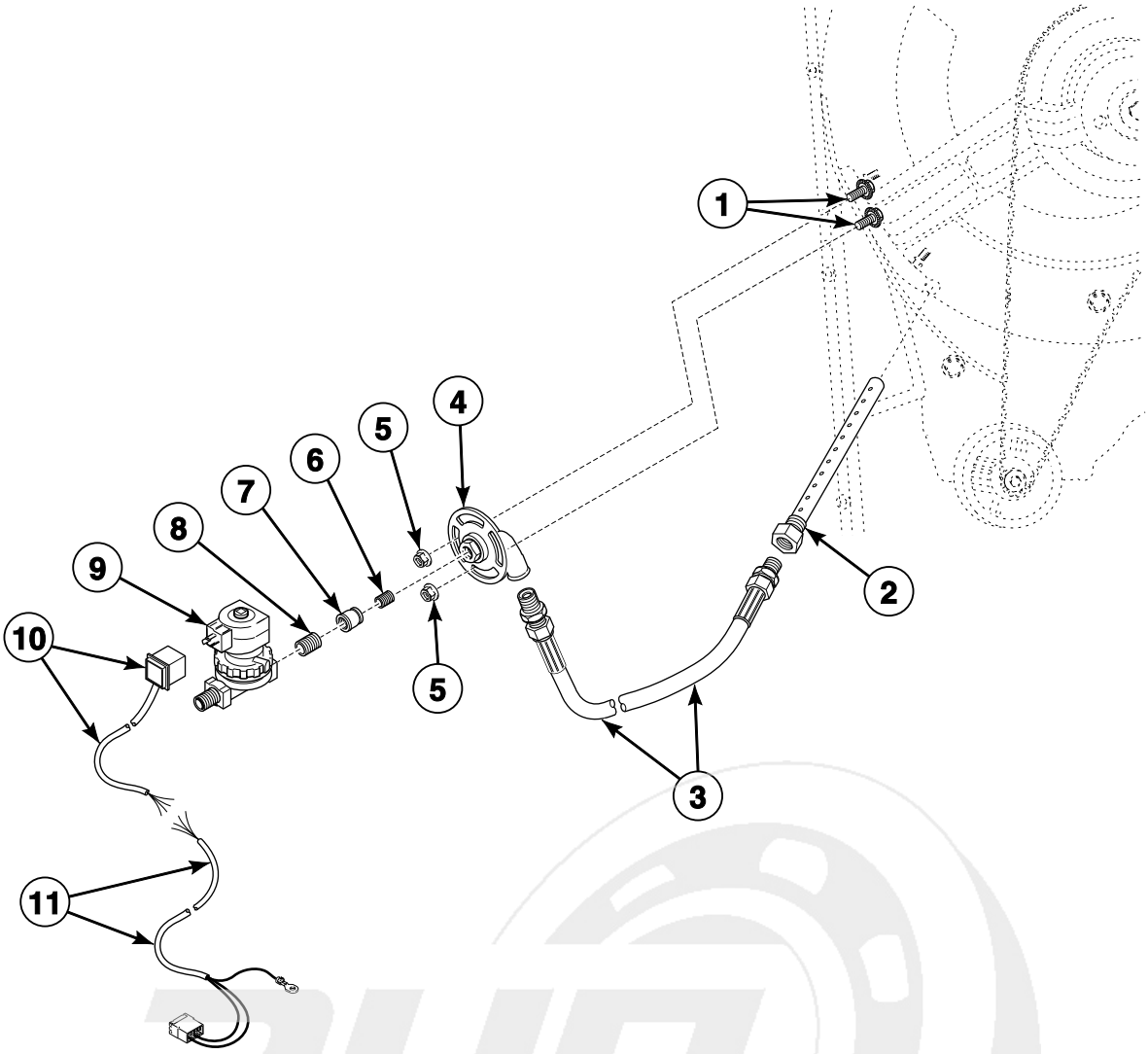

CFD106P_9001005

info@zipnasklade.ru
8(800)500-69-51

© Copyright, Alliance Laundry Systems LLC – DO NOT COPY or TRANSMIT

Steam Heating Option

REF	PART NO.	DESCRIPTION	COMMENTS
	808P3	Steam Kit	Includes items 1-11
1	9001310	Bolt	
2	9001118	Steam Injector	
3	9001471	Steam Hose	
4	9001107	Steam Inlet	
5	9001311	Nut	
6	70435601	Pipe Nipple	1/2 inch
7	F200001100	Reducer	
8	F200001200	Nipple	3/8 inch
9	F380787P	Steam Valve	
10	F605220	Steam Valve Harness	
11	9001751	Main Control Heat Harness	

info@zipnasklade.ru
8(800)500-69-51

© Copyright, Alliance Laundry Systems LLC – DO NOT COPY or TRANSMIT

Notes

info@zipnasklade.ru
8(800)500-69-51

© Copyright, Alliance Laundry Systems LLC – DO NOT COPY or TRANSMIT

Parts Index

A

AC Drive Cover
F200167500 81
AC Drive Filter
209/00287/11 81

B

Backbridge
111/10303/00 65
9001062 ..... 63, 79, 81
9002092 83
Balance Switch Access Cover
F0637820-00 53
Ball Bearing
212/00024/01 23
9001438 ..... 23, 25, 27
Basket
B12380901 ..... 19, 21, 29
B12381001 ..... 19, 21, 29
Basket and Pulley Kit
B12537901 ..... 19, 21, 31
Basket Kit
B12543201 ..... 19, 21, 29
Bearing
F100134 25
Bearing and Seal Kit
3884P 25
Bearing Housing Assembly
139/10006/00 ..... 23, 25
9001451 27
Bearing Housing Cover
9001097 27
Bearing Replacement Kit
891P3 23
892P3 27
Bearing Replacement Tool Kit
381P3 25
385P4 ..... 23, 27
Bearing Retainer Ring
9001036 33
Bearing Spacer
9001602 31
Belt
226/00149/00 29
226/00151/00 31
9001569 29
Belt Adjusting Rod
9001020 33
Bolt
206/00032/00 ..... 19, 21
206/00087/00 ..... 15, 17
206/00099/00 73
206/00153/00 ..... 13, 15, 17
9001272 ..... 23, 25
9001273 ..... 39, 41, 43, 63, 65, 67, 69, 71
9001274 ..... 23, 25, 27, 45, 47, 49
9001275 ..... 37, 63, 65, 67, 69, 71
9001277 ..... 37, 59, 87
9001278 ..... 81, 83
9001279 79
9001283 ..... 33, 35
9001284 ..... 29, 31
9001286 ..... 33, 35
9001287 ..... 19, 21, 39, 41, 87
9001288 27
9001292 ..... 71, 79, 81, 83, 85
9001296 ..... 63, 65, 67, 69, 71
9001297 35
9001305 ..... 19, 21
9001306 ..... 19, 21
9001307 ..... 33, 35
9001310 ..... 57, 59, 61, 63, 65, 67, 69, 71, 73, 75, 79, 81, 83, 87, 95
9001317 ..... 81, 83
9001342 75
9001557 ..... 13, 15, 17
9001901 29
9001949 43
Bushing
F130315 77
9001271 75

C

Caddy Bracket
9001559 ..... 23, 25, 27
9001560 ..... 23, 25, 27
Circuit Board Cover
229/00289/00 55
Clamp
223/00009/00 77
Connector
9001888 79
Connector to Inverter Harness
9001904 ..... 81, 83
Contact Block
44018701 ..... 53, 55
44018901 ..... 53, 55
Contactor
9001352 ..... 57, 59, 61
9002066 ..... 57, 59, 61
Control Module Bottom Assembly
F0637821-00 53
Control Module Face
F0637813-00 53
Control Module Wrap
F0637819-00 53
Control Module Wrap Brace
111/10310/02 89
Control Panel
111/10302/00 65
9001068 ..... 55, 67, 69, 71
9001089 ..... 55, 63
Cooling Fan
9001375 ..... 33, 35, 81, 83
Cordlock
9001431 79
9001432 ..... 33, 35, 79

N/A items do not appear in index.

info@zipnaskladе.ru
8(800)500 69-51

© Copyright, Alliance Laundry Systems LLC – DO NOT COPY or TRANSMIT

Counter Ring
9001483 29
9001601 31

Counterweight
9001023 ..... 19, 21
9001024 ..... 19, 21

Coupling
B12341901 37
223/00360/50 77
223/00360/60 77

Cover
111/10315/00 73

Cylinder and Shaft Assembly
B12327101 ..... 19, 21, 29

D

Diaphragm
F0638025-00 77
9001743 79

Diaphragm and Guide Kit
G582P3 77

Dispenser Assembly
9001513 91

Dispenser Drain Funnel
9001538 91

Dispenser Front Mounting Plate
9001075 ..... 63, 65

Dispenser Lock Plate
111/10313/00 89

Dispenser Mounting Plate
9001054 67

Dispenser Rear Mounting Plate
9001076 ..... 63, 65

Display
209/00580/03 ..... 53, 55

Door
118/00125/00 ..... 47, 49
9001131 45

Door Front Panel
111/05015/00 21
9001088 19
9001096 19

Door Glass
B12449801 ..... 45, 47, 49

Door Glass Seal
9001501 ..... 45, 47, 49

Door Handle
217/00055/00 ..... 45, 47, 51
217/00065/00 49

Door Handle Catch
9001473 51

Door Handle Decal
9001741 ..... 19, 21

Door Handle Latch
9001474 51

Door Handle Stop
9001467 ..... 45, 47, 49

Door Hinge Block
9001628 ..... 45, 47, 49

Door Hinge Plate Assembly
9001038 ..... 45, 47, 49

Door Hinge Spacer
9001105 ..... 45, 47, 49
9001106 ..... 45, 47, 49

Door Lock Assembly
B12517701 43

Door Lock Microswitch
9001371 43

Door Lock Pin and Pivot Block Kit
9001997 ..... 43, 45, 47, 49

Door Lock Pin Bracket
9001998 43

Door Lock Spacer
9001477 43

Door Lock Spring
9001558 43

Door Release Wire
9001950 43

Door Solenoid
209/00703/50 43

Drain Elbow
223/00368/00 37

Drain Kit
831P3 41

Drain Pipe
9001518 ..... 39, 41

Drain Support Bracket
111/10300/00 37

Drain Tee
F0380318-00 37

Drain Tub to Drain Valve Hose
9001525 39

Drain Valve
F0380632-00 37
9001355 ..... 39, 41
9001361 41

Drain Valve Bracket
F0638013-00 37

Drain Valve Bracket Plate
111/10318/00 37

Drain Valve Harness
900/00261/UL00 ..... 39, 41

Drain Valve Mounting Bracket
111/10312/00 37

Drain Valve Overflow Plug
9001503 ..... 39, 41

Drain Valve Plate Assembly
9001099 ..... 39, 41

Drain Valve to Drain Pipe Hose
9001526 ..... 37, 39, 41

Drain Valve Wiring Harness
210/00905/00 37

Drive
F8421105 81
F8421106 81
F8421107 81
F8421108 81
F8421109 83
F8421110 83
F8421111 83
F8421112 83

Drum
B12327301 ..... 19, 21, 31

info@zipnaskade.ru
8(800)500 69-51

N/A items do not appear in index.

© Copyright, Alliance Laundry Systems LLC – DO NOT COPY or TRANSMIT

E

Elbow
223/00363/00 37

Electrical Component Extension Plate
9001144 57

Electrical Component Mounting Plate
9001958 61

Electrical Component Plate
9001053 57

Electrical Components Plate
9001057 59
9001146 59
9002081 61
9002082 61

Electrical Connection Plate
9001040 79
9001902 83
9001952 81

Electrical Connection Sticker
9001594 79

Exhaust Valve Hose
223/00170/00 41

F

Fan Grill
9001376 ..... 81, 83

Filter
209/00287/11 83
209/00385/00 79
209/00385/01 79
210/00027/UL00 ..... 81, 83, 85
9001897 85
9001898 ..... 81, 83, 85
9001899 ..... 81, 83, 85

Filter Bracket
9002090 85

Finger Guard Extension Assembly
F0637762-00 ..... 63, 65

Flat Cable
9001417 ..... 53, 55

Flow Restrictor
223/00367/00 77
223/00390/00 79

Frame
9001100 11
9001101 9

Front Panel
9001130 ..... 19, 21

Front Panel Gasket
223/00242/50 ..... 19, 21

Fuse
9001379 55
9001384 79

Fuse Holder
9001364 79

G

Gasket
246/00149/00 37
9001607 ..... 19, 21
9001608 ..... 63, 65, 67, 69, 71

Gasket Cover
F0637836-00 89

Gasket Retaining Plate
F0637835-00 89

Gravity Drain Valve
803292 37

Grease Ring
9001441 27

Grommet
9001530 ..... 81, 83
9001539 ..... 57, 59, 79

Ground Terminal
9001350 ..... 79, 85
9001419 43

H

Heating Element
209/00562/20 93

Heating Element Plug
F360202 93

Hinge
9001486 ..... 45, 47, 49

Hose
F0150470-01 37
223/00359/00 77
223/00360/00 77

Hose Barb
9001496 ..... 57, 59

Hose Clamp
F200201 37
F200205 ..... 79, 91
F200213 37
223/00010/00 77
36801 91
9001492 ..... 57, 59, 79
9001493 ..... 39, 41
9001494 ..... 37, 39, 41
9001495 ..... 77, 91
9001502 ..... 39, 41, 91

Hose Vent
9001510 ..... 77, 79

I

Injection Nozzle
F8322001 89

Inlet Valve Restrictor
F200052400 79

Inlet Valve Solenoid
9001753 79

Inlet Valve, 2-Way
209/00316/00 79
9001377 ..... 77, 79

info@zipnaskladc.ru
8(800)500 69 51

N/A items do not appear in index.

© Copyright, Alliance Laundry Systems LLC – DO NOT COPY or TRANSMIT

Insulating Sticker
229/00255/00 ..... 53, 55
Interlock Coil Spring
9001554 43
Interlock Lever
9001478 43
Intermediate Fan Motor Plate
9001055 33
Inverter
227/00224/00 83
227/00238/00 81
9001586 83
Inverter Box Cover
9001061 83
Inverter Drive Box
9001059 83
9001060 81
Inverter Fan
9002035 ..... 81, 83
Inverter Kit
F8421005 81
F8421006 ..... 81, 83
F8421007 81
F8421008 81
F8421009 83
F8421011 83
F8421012 83
Inverter to Motor Harness
210/38729UL/15 83
9002078 81

K

Key
F160562 53
9001445 ..... 29, 31
Kickplate
9001090 ..... 63, 65, 67, 69, 71

L

Latch
111/10310/03 53
Left Front Panel
9001672 ..... 63, 65
9001677 ..... 67, 69, 71
Lever Spring
9001553 43
Lid Lock
F190802P 53
Lift-Off Hinge
F190202P 89
F190205P 89
Light Microswitch
9001372 43
Lip Seal
B12332301 25
Liquid Soap Dispenser Insert
9001511 91
Liquid Soap Manifold
9001550 ..... 77, 81, 83, 91
Lock Latch
F606295 53
Lock Shaft
9001468 43
Logo Decal
9001890 55
Lubricator
212/00002/00 27

M

Main Control
9002100 55
9002100AR 53
9002100MA 53
Main Control Heat Harness
9001751 95
Main Switch
9001387 85
9001390 85
9002089 85
Main Switch Cover
9002088 85
Micro to Connector Harness
B12371101 83
9001905 ..... 81, 83
Motor
B12510901 33
9001576P 35
Motor Plate
9001029 35
9001030 33

N

Neutral Terminal Block
9001388 85
9001391 85
Nipple
F200001200 95
Noise Filter
227/00242/00 ..... 81, 83
9001590 83
9001593 81
Noise Suppressor
9001746 ..... 57, 59
Nut
F430218 37
F431000 89
F431005 89
F431017 53
F431024 ..... 37, 89
F431037 89
204/00114/00 77
9001249 ..... 39, 41, 87
9001250 ..... 57, 67, 69, 71
9001252 ..... 35, 63, 65, 79, 81, 87
9001253 ..... 43, 55
9001254 ..... 19, 21, 37, 43, 63, 65, 67, 69, 71, 87
9001255 ..... 13, 15, 17, 35
9001256 ..... 13, 15, 17
9001257 ..... 13, 15, 17, 33
9001258 ..... 45, 47, 49

info@zipnaskype.ru
8(800)500-6151

N/A items do not appear in index.

© Copyright, Alliance Laundry Systems LLC – DO NOT COPY or TRANSMIT

9001260 ..... 39, 41, 45, 47, 49, 63, 65, 67, 69, 71
9001261 83
9001262 ..... 19, 21, 63, 65, 67, 69, 71
9001264 ..... 19, 21, 33, 35
9001266 ..... 13, 15, 17, 19, 21, 23, 25, 27, 33, 35, 37
9001267 ..... 35, 71, 81, 83
9001268 33
9001269 ..... 53, 55
9001270 79
9001311 ..... 57, 59, 63, 65, 67, 87, 95
9001349 75

O

O-Ring
9001460 23
9001469 ..... 45, 47, 49
9001599 27

Outlet Pipe Plate Assembly
9001037 ..... 39, 41, 63, 65, 67, 69, 71

Out-of-Balance Switch
9001369 87

Out-of-Balance Switch Boot
9001766 87

Out-of-Balance Switch Bracket
9001056 87

Overflow Hose
223/00131/00 ..... 39, 41

Overlay
F8435601 55
9001561 ..... 53, 55
9001563 55

Overload Contactor
9002021 61
9002022 61
9002023 61
9002024 61
9002025 61
9002026 61
9002027 61

P

Parameter Unit Assembly
F8410901 ..... 81, 83
9001011 ..... 81, 83

Pipe
223/00370/00 37

Pipe Nipple
70435601 95

Pressure Hose
223/00333/00 ..... 57, 59, 61
9001531 ..... 81, 83

Pressure Switch
9001351 ..... 57, 59, 61

Pressure Switch Cap
9001932 61

Pressure Switch Elbow
9001542 ..... 57, 59

Pressure Switch Hose Tee
223/00173/10 ..... 57, 59, 61

Prewash and Mainwash Nozzle
9001487 79

Printboard Separator
211/00128/00 53

Programming Cable
9001418 ..... 53, 55

Programming Key
9001756 ..... 53, 55

Programming Key Contact Switch
9001378 ..... 53, 55

Pulley
185/00086/00 33
212/00009/00 31
226/00148/00 29
226/00150/00 31
226/00152/00 35
239/00013/00 ..... 29, 31
9001570 33
9001574 35
9001629 31

Pulleys and Belt Kit
967P3 29

Pushbutton
44018801 ..... 53, 55

Push-Pull Knob
F190101 89

R

Rear Panel
111/10308/00 73
9001045 75
9001046 75

Reducer
F200001100 95

Restrictor Assembly
F060334200 91

Retainer Ring
9001440 ..... 23, 25, 27
9001452 ..... 23, 25

Right Front Panel
9001671 ..... 63, 65
9001676 ..... 67, 69, 71

Right Side Panel
111/10301/00 73

Rinse Insert
9001506 91

Rivet
9001346 ..... 53, 79, 85

Roller Bearing
9001439 ..... 27, 31

S

Screw
B12347509 91
B12350903 ..... 81, 83
B12500801 49
F430903 89
F430909 89
F430927 37
F430939 ..... 37, 89
F430956 53
107/00136/00 77
201415 53

N/A items do not appear in index.

info@zipnaskate.ru
8(800)500-6751

© Copyright, Alliance Laundry Systems LLC – DO NOT COPY or TRANSMIT

206/00056/00 ..... 31, 35
206/00104/00 73
206/00166/00 69
207/00135/00 43
9001294 33
9001302 35
9001313 ..... 19, 21
9001323 81
9001324 43
9001325 87
9001326 ..... 45, 47
9001329 ..... 35, 79
9001330 ..... 63, 65
9001332 ..... 63, 65, 67, 69, 71
9001335 31
9001341 ..... 45, 47, 49
9001657 ..... 19, 21
9001661 ..... 63, 65, 67, 69, 71
9001670 ..... 63, 65, 67, 69, 71
9001675 ..... 19, 21
9001697 ..... 23, 25, 27
9002087 61

Seal Holder Assembly
9001117 23
9001744 27

Seal Plate
9001116 23
9001133 27

Seal Plate Assembly
B12333701 25

Shaft Seal
9001134 31
9001482 23

Shipping Brace
9001771 9
9001772 11

Shock Absorber
9001617 13
9001617P 15, 17

Shock Absorber Bushing
211/00137/10 13

Shock Absorber Service Kit
B12419101 ..... 13, 15
B12460901 ..... 13, 17

Side Panel
9001135 ..... 67, 69, 71, 75
9001142 ..... 63, 65, 75

Side Panel Cover
111/10316/00 73

Siphon Break Dispenser Hose
9001673 91
9001678 91

Siphon Break Hose
B12322401 91
B12322402 91

Siphon Tube
F150390 89

Soap Box Support Plate
9001044 67

Soap Dispenser Assembly
223/00102/30 91

Soap Dispenser Cover
9001514 75

Soap Dispenser Cover Hinge Rod
9001516 75

Soap Dispenser Frame
9001515 75

Soap Dispenser Gasket
9001522 91

Soap Dispenser Rinse Siphon
9001507 91

Soap Harness
210/01304/07 55

Soap Injection PCB with Fuse
9001366 79

Soap Spray Nozzle
9001509 91

Softener Spray Nozzle
9001508 91

Spacer
115/00151/00 ..... 19, 21
211/00140/00 53
9001425 55
9001659 55

Speed Detector
210/00074/00 ..... 23, 25
210/00075/00 27

Standoff
211/00147/00 77
9001429 79

Steam Hose
9001471 95

Steam Injector
9001118 95

Steam Inlet
9001107 95

Steam Kit
808P3 95

Steam Valve
F380787P 95

Steam Valve Harness
F605220 95

Supply Deflector
F200047800 91

Supply Dispenser Assembly
F0637838-00 89

Supply Dispenser Cover Assembly
F0637833-00 89

Supply Dispenser Cup
F150368 89
F150369 89

Supply Dispenser Hose
F0200236-01 37

Supply Dispenser Lid Latch
F432223 89

Supply Dispenser Mounting Bracket
F0609664-00 89
F0637866-00 89

Supply Dispenser Weldment
F0637862-00 89

Supply Hose
F200171 37

Support
B12418401 ..... 15, 17
B12455301 17
B12455401 17

Support Bracket
B12456101 71
B12456201 71

info@zipnasklade.ru
8(800)500-69-51

N/A items do not appear in index.

© Copyright, Alliance Laundry Systems LLC – DO NOT COPY or TRANSMIT

111/00207/11 69
Support Connector
9001960 61
Suspension Spring
B12440101 13
B12456301 ..... 13, 15, 17
Switch Base
9001356 ..... 53, 55
Switch Knob
9002072 55
Switch Lever
9001479 43

T

Tee
223/00369/00 37
Terminal Block
9001354 79
Thermostat
210/01064/16 57
9001669 ..... 59, 61
Thermostat Seal
9001564 ..... 57, 59, 61
Threaded Rod
B12511601 ..... 15, 17
Tilt Detector Plate
B12485001 87
Tilt Switch Bracket
9001041 87
Top Panel
111/10304/00 73
9001067 75
9001145 75
T-Piece
253/00006/00 41
Transformer
9001986 ..... 81, 83
Trim
211/00143/00 53
Tub
B12330101 ..... 19, 21
B12330201 ..... 19, 21
B12330301 ..... 19, 21
B12330501 ..... 19, 21
B12330601 ..... 19, 21
119/00213/11 ..... 19, 21, 37
9001124 ..... 19, 21
Tub Clamp Ring
9001603 ..... 19, 21
Tub Front
9001139 ..... 19, 21
Tub Front Mounting Strap
115/00161/00 ..... 19, 21
Tub Front Panel Clip
9001464 ..... 19, 21
Tub Front Panel Gasket
223/00242/30 ..... 19, 21
Tub Front Ring Clamp
9001598 ..... 19, 21
Tub Mount Rings Bracket
115/00125/00 ..... 19, 21
Tub Mounting Strap
9001138 ..... 19, 21
Tub Strap
9001132 ..... 19, 21
Tub Support
9001016 11
9001025 9
Tub Tightening Ring
115/00162/00 ..... 19, 21
115/00163/00 ..... 19, 21

V

Valve, 3-Way
F0381737-00 77
V-Belt
9001575 31
Vent Hose
9001521 91
Voltage Discharge Decal
B12355001 ..... 81, 83

W

Warning Label
44127701 37
Washer
B12421401 69
B12522101 19
F430322 89
F431105 89
F431106 89
F431123 53
F431133 89
F431137 89
F431147 ..... 37, 89
M400080 37
201/00202/00 27
20290 79
202/00101/00 37
202/00111/00 ..... 45, 47, 49
202/00124/00 43
803615 79
9001208 ..... 15, 17, 21, 23, 25, 27, 35
9001209 ..... 33, 79
9001211 ..... 33, 35
9001213 ..... 43, 67, 69, 71
9001214 ..... 19, 21
9001216 ..... 15, 17, 19, 21, 63, 65, 67, 69, 71, 87
9001217 ..... 29, 31
9001221 43
9001222 43
9001223 13
9001225 ..... 23, 25
9001227 ..... 39, 41
9001229 ..... 63, 65, 71, 79, 81, 85
9001230 ..... 43, 45, 47, 49, 59, 87
9001232 ..... 45, 47, 49
9001233 ..... 19, 21
9001236 ..... 63, 65, 67, 69, 71
9001238 ..... 29, 31
9001239 35
9001240 ..... 27, 39, 41, 87
9001241 ..... 23, 25, 39, 41, 57, 63, 65, 67, 69, 71

N/A items do not appear in index.

info@ziphaskiade.ru
8(800)500-69-51

© Copyright, Alliance Laundry Systems LLC – DO NOT COPY or TRANSMIT

9001242 ..... 81, 83
9001243 ..... 35, 63, 65, 79, 81, 83, 85, 87
9001244 ..... 43, 55
9001245 ..... 45, 47, 49
9001523 ..... 53, 55

Water Hose
F200107P 77
F200164 79
F200166 79
223/00059/00 77
9001498 ..... 77, 79
9001499 91
9001500 ..... 79, 91

Water Level Switch
209/00029/00 61

Water Valve Adapter
223/00050/01 79

info@zipnasklade.ru
8(800)500-69-51

N/A items do not appear in index.

© Copyright, Alliance Laundry Systems LLC – DO NOT COPY or TRANSMIT