Washer-Extractor

Cabinet Freestanding

Refer to Page 5 for Model Numbers

Parts

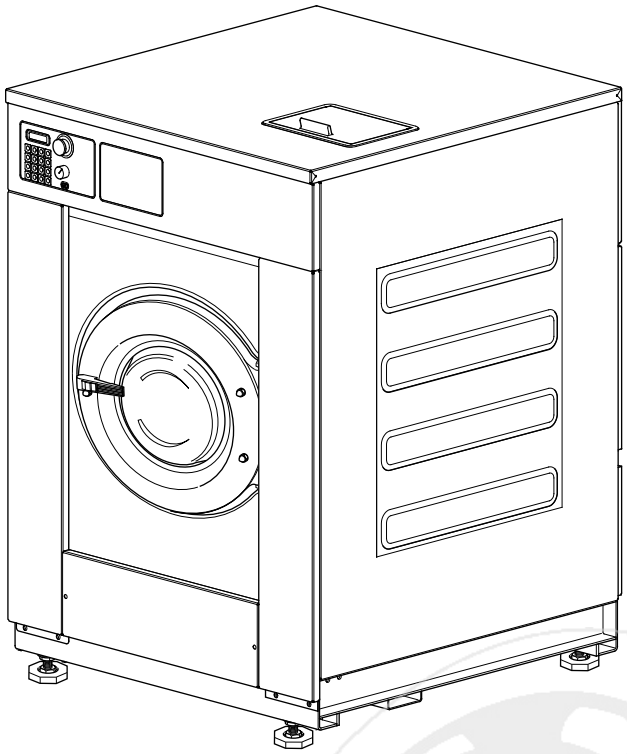

CFD7C_9001004

info@zipnasklade.ru
8(800)500-69-51

Alliance Laundry Systems

www.alliancelaundry.com

Part No. 9001004R16
December 2013

info@zipnasklade.ru
8(800)500-69-51

Table of Contents

Title	Page
Parts Ordering Information	3
Model Identification	5
Cabinet Freestanding Washer-Extractor Product Overview	6
Frame (Drawing 1 of 2)	8
Frame (Drawing 2 of 2)	10
Shock and Spring Assembly (Drawing 1 of 2)	12
Shock and Spring Assembly (Drawing 2 of 2)	14
Shell and Basket (Drawing 1 of 3)	16
Shell and Basket (Drawing 2 of 3)	18
Shell and Basket (Drawing 3 of 3)	20
Bearing Assembly	22
Bearing Assembly - Models Through 1/30/11	24
Bearing Assembly - Models Starting 1/31/11	26
Basket, Pulley and Belt (Drawing 1 of 2)	28
Basket, Pulley and Belt (Drawing 2 of 2)	30
Motor (Drawing 1 of 3)	32
Motor (Drawing 2 of 3)	34
Motor (Drawing 3 of 3)	36
Single Drain Assembly (Drawing 1 of 4)	38
Single Drain Assembly (Drawing 2 of 4)	40
Single Drain Assembly (Drawing 3 of 4)	42
Single Drain Assembly (Drawing 4 of 4)	44
Dual Drain Assembly	46
Door Lock	48
Door (Drawing 1 of 3)	50
Door (Drawing 2 of 3)	52
Door (Drawing 3 of 3)	54
Door Handle	56
Control Panel	58
Control Module (Drawing 1 of 2)	60
Control Module (Drawing 2 of 2)	62
Front, Left Side and Upper Back Panels (Drawing 1 of 2)	64
Front, Left Side and Upper Back Panels (Drawing 2 of 2)	66
Top, Right Side and Lower Back Panels (Drawing 1 of 2)	68
Top, Right Side and Lower Back Panels (Drawing 2 of 2)	70
Upper Back Panel (Drawing 1 of 4)	72
Upper Back Panel (Drawing 2 of 4)	74
Upper Back Panel (Drawing 3 of 4)	76
Upper Back Panel (Drawing 4 of 4)	78
AC Drive Panel (Drawing 1 of 3)	80
AC Drive Panel (Drawing 2 of 3)	82

info@zipnasklade.ru
8(800)500-69-51

© Copyright 2013, Alliance Laundry Systems LLC

All rights reserved. No part of the contents of this book may be reproduced or transmitted in any form or by any means without the expressed written consent of the publisher.

AC Drive Panel (Drawing 3 of 3) 84
Balance Switch (Drawing 1 of 3) 86
Balance Switch (Drawing 2 of 3) 88
Balance Switch (Drawing 3 of 3) 90
Supply Dispenser 92
Electric Heating Option 94
Steam Heating Option - *X35 Models 96
Parts Index 99

info@zipnasklade.ru
8(800)500-69-51

© Copyright, Alliance Laundry Systems LLC – DO NOT COPY or TRANSMIT

Parts Ordering Information

If literature or replacement parts are required, contact the source from whom the machine was purchased or contact Alliance Laundry Systems at (920) 748-3950 for the name and address of the nearest authorized parts distributor.

For technical assistance, call either of the numbers listed below:

(920) 748-3121 Ripon, Wisconsin

+32 56 41 20 54 Wevelgem, Belgium

info@zipnasklade.ru
8(800)500-69-51

© Copyright, Alliance Laundry Systems LLC – DO NOT COPY or TRANSMIT

Notes

info@zipnasklade.ru
8(800)500-69-51

© Copyright, Alliance Laundry Systems LLC – DO NOT COPY or TRANSMIT

Model Identification

Information in this manual is applicable to these washer-extractor models:

HX018PVQM7
HX018PVXM7
HX025PVQM7
HX025PVXM7
HX035PVQM7
HX035PVXM7
HX18PVQM6
HX18PVQM7
HX18PVQU6
HX18PVXM6
HX18PVXM7
HX18PVXU6
HX25PVQM6
HX25PVQM7
HX25PVQU6
HX25PVXM6
HX25PVXM7
HX25PVXU6
HX35PVQM6
HX35PVQM7
HX35PVQU6
HX35PVXM6
HX35PVXM7
HX35PVXU6

SX018PVPA7
SX018PVQM7
SX018PVXM7
SX025PVQM7
SX025PVXM7
SX035PVNM7
SX035PVQM7
SX035PVXM7
SX18PVPA7
SX18PVQM6
SX18PVQM7
SX18PVQU6
SX18PVXM6
SX18PVXM7
SX18PVXU6
SX25PVQM6
SX25PVQM7
SX25PVQU6
SX25PVXM6
SX25PVXM7
SX25PVXU6
SX35PVNM7
SX35PVQM6
SX35PVQM7
SX35PVQU6
SX35PVXM6
SX35PVXM7
SX35PVXU6

UX018PVNA7
UX018PVPA7
UX018PVQA7
UX018PVQM7
UX018PVXA7
UX018PVXM7
UX025PVNA7
UX025PVPA7
UX025PVQA7
UX025PVQM7
UX025PVXA7
UX025PVXM7
UX035PVNA7
UX035PVPA7
UX035PVQA7
UX035PVQM7
UX035PVXA7
UX035PVXM7
UX18PVNA6
UX18PVNA7
UX18PVNU6
UX18PVPA6
UX18PVPA7
UX18PVPU6
UX18PVQA6
UX18PVQA7
UX18PVQM6
UX18PVQM7
UX18PVQU6
UX18PVXA6
UX18PVXA7
UX18PVXM6
UX18PVXM7
UX18PVXU6

UX25PVNA6
UX25PVNA7
UX25PVNU6
UX25PVPA6
UX25PVPA7
UX25PVPU6
UX25PVQA6
UX25PVQA7
UX25PVQM6
UX25PVQM7
UX25PVQU6
UX25PVXA6
UX25PVXA7
UX25PVXM6
UX25PVXM7
UX25PVXU6
UX35PVNA6
UX35PVNA7
UX35PVNU6
UX35PVPA6
UX35PVPA7
UX35PVPU6
UX35PVQA6
UX35PVQA7
UX35PVQM6
UX35PVQM7
UX35PVQU6
UX35PVXA6
UX35PVXA7
UX35PVXM6
UX35PVXM7
UX35PVXU6

info@zipnasklade.ru
8(800)500-69-51

© Copyright, Alliance Laundry Systems LLC – DO NOT COPY or TRANSMIT

Cabinet Freestanding Washer-Extractor Product Overview

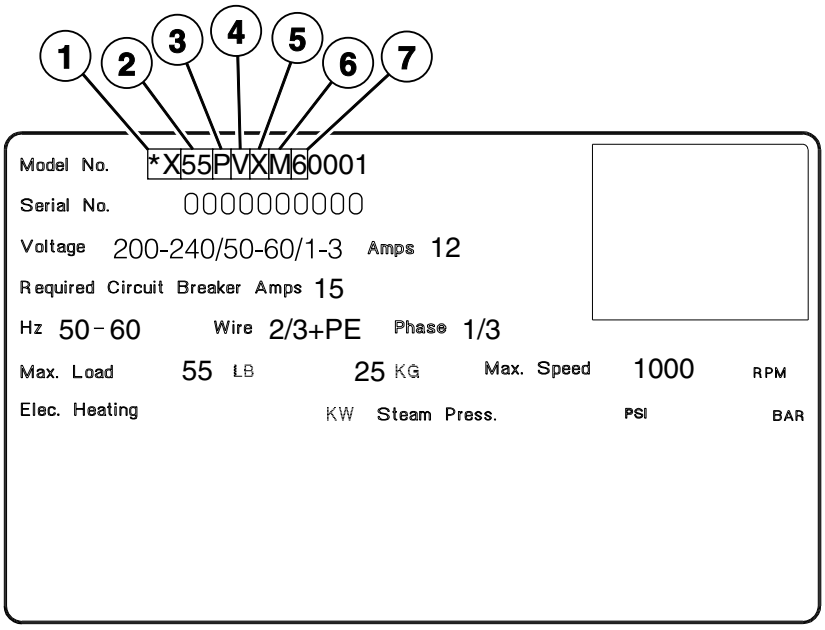

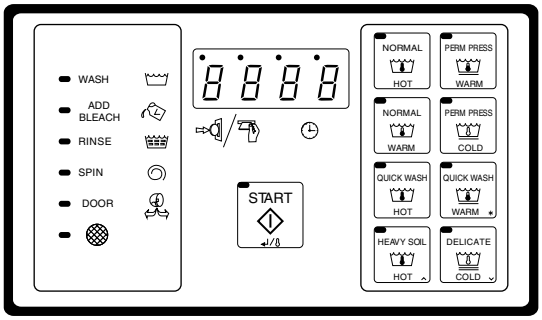

B Computer (Domestic)

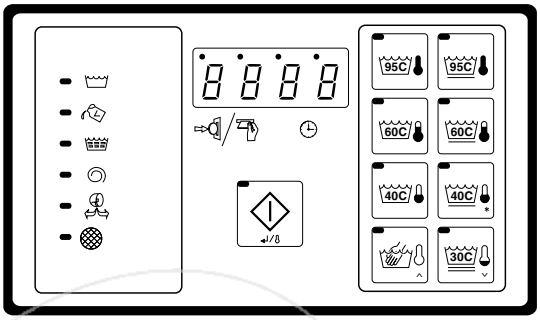

B Computer (International)

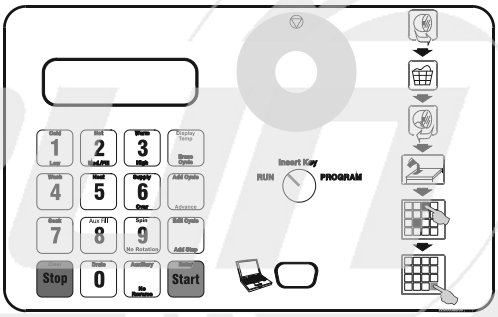

WE-8 Micro

CFD266P_9001004

info@zipnasklade.ru
8(800)500-69-51

© Copyright, Alliance Laundry Systems LLC – DO NOT COPY or TRANSMIT

Cabinet Freestanding Washer-Extractor Product Overview

REF	PART NO.	DESCRIPTION	COMMENTS
1	-	Product Family	HX NX SX UX
2	-	Capacity (Pounds)	18 or 018 25 or 025 30 or 030 35 or 035 55 or 055 75 or 075 100 135 165
3	-	Control	B (B Computer) P (WE-8 Micro)
4	-	Speed	V (Variable)
5	-	Voltage	N (440-480/50-60/3/3) P (380-415/50-60/3/3) Q (200-240/50-60/3/3) X (200-240/50-60/1/3)
6	-	OEM	A F M U
7	-	Design	6 and 7

info@zipnasklade.ru
8(800)500-69-51

© Copyright, Alliance Laundry Systems LLC – DO NOT COPY or TRANSMIT

Frame (Drawing 1 of 2)

Models HX18PVQU6, HX18PVXU6, HX25PVQU6, HX25PVXU6, HX35PVQU6, HX35PVXU6, SX18PVQU6, SX18PVXU6, SX25PVQU6, SX25PVXU6, SX35PVQU6, SX35PVXU6, UX18PVNU6, UX18PVPU6, UX18PVQU6, UX18PVXU6, UX25PVNU6, UX25PVPU6, UX25PVQU6, UX25PVXU6, UX35PVNU6, UX35PVPU6, UX35PVQU6 and UX35PVXU6

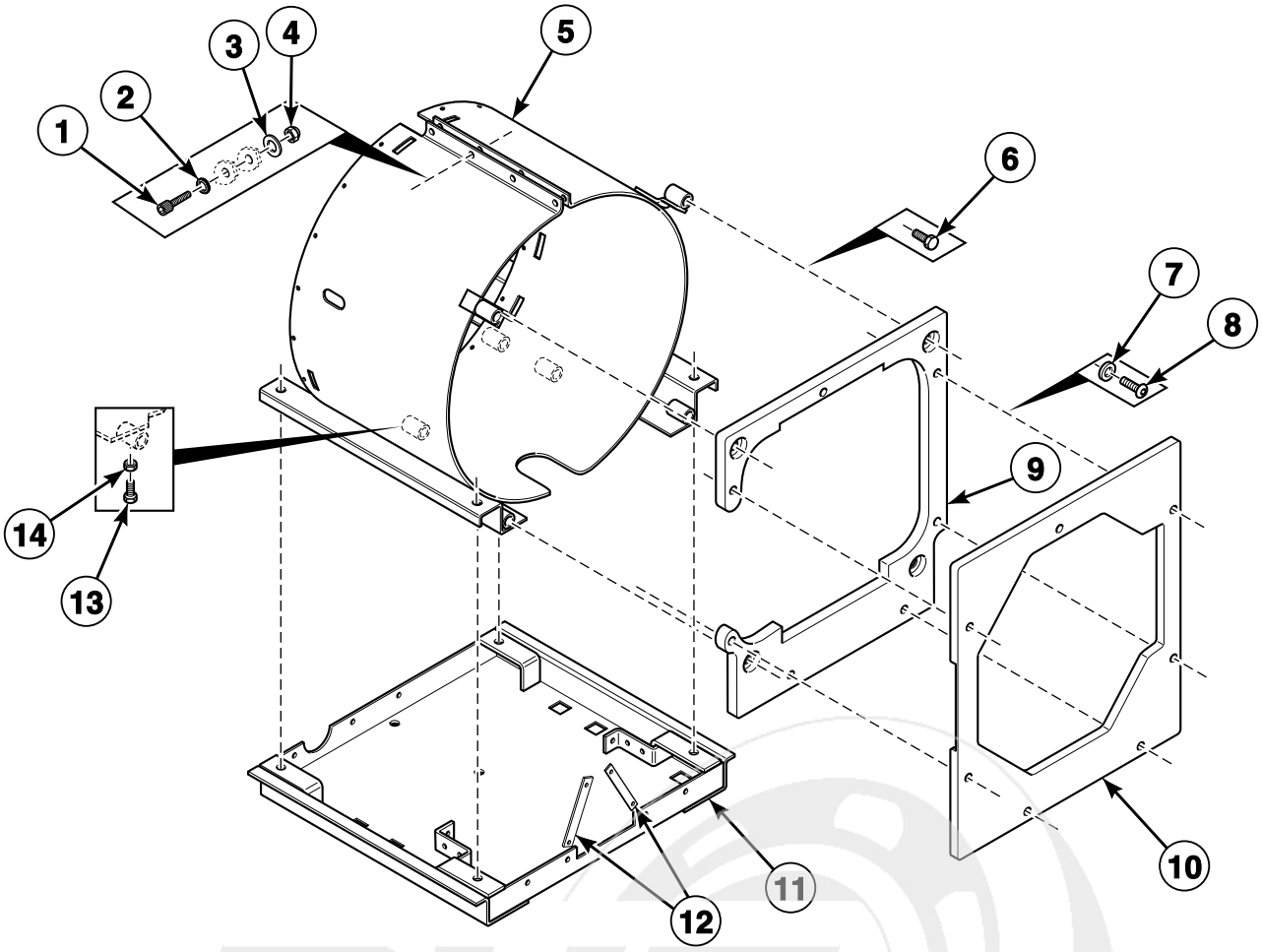

CFD109P_9001004

info@zipnasklade.ru
8(800)500-69-51

© Copyright, Alliance Laundry Systems LLC – DO NOT COPY or TRANSMIT

Frame (Drawing 1 of 2)

REF	PART NO.	DESCRIPTION	COMMENTS
1	9001300	Screw	
2	9001238	Washer	
3	9001212	Washer	
4	9001264	Nut	
5	9001156	Tub Support	Models HX18PVQU6, HX18PVXU6, SX18PVQU6, SX18PVXU6, UX18PVNU6, UX18PVPU6, UX18PVQU6 and UX18PVXU6
	9001157	Tub Support	Models HX25PVQU6, HX25PVXU6, SX25PVQU6, SX25PVXU6, UX25PVNU6, UX25PVPU6, UX25PVQU6 and UX25PVXU6
	9001158	Tub Support	Models HX35PVQU6, HX35PVXU6, SX35PVQU6, SX35PVXU6, UX35PVNU6, UX35PVPU6, UX35PVQU6 and UX35PVXU6
6	9001304	Bolt	
7	9001214	Washer	
8	9001657	Screw	
9	9001160	Counterweight	Models HX18PVQU6, HX18PVXU6, HX25PVQU6, HX25PVXU6, SX18PVQU6, SX18PVXU6, SX25PVQU6, SX25PVXU6, UX18PVNU6, UX18PVPU6, UX18PVQU6, UX18PVXU6, UX25PVNU6, UX25PVPU6, UX25PVQU6 and UX25PVXU6
	9001159	Counterweight	Models HX35PVQU6, HX35PVXU6, SX35PVQU6, SX35PVXU6, UX35PVNU6, UX35PVPU6, UX35PVQU6 and UX35PVXU6
10	9001066	Front Panel	Models HX18PVQU6, HX18PVXU6, HX25PVQU6, HX25PVXU6, SX18PVQU6, SX18PVXU6, SX25PVQU6, SX25PVXU6, UX18PVNU6, UX18PVPU6, UX18PVQU6, UX18PVXU6, UX25PVNU6, UX25PVPU6, UX25PVQU6 and UX25PVXU6
	9001688	Front Panel	Models HX35PVQU6, HX35PVXU6, SX35PVQU6, SX35PVXU6, UX35PVNU6, UX35PVPU6, UX35PVQU6 and UX35PVXU6
11	9001149	Frame	Models HX18PVQU6, HX18PVXU6, SX18PVQU6, SX18PVXU6, UX18PVNU6, UX18PVPU6, UX18PVQU6 and UX18PVXU6
	9001151	Frame	Models HX25PVQU6, HX25PVXU6, SX25PVQU6, SX25PVXU6, UX25PVNU6, UX25PVPU6, UX25PVQU6 and UX25PVXU6
	9001689	Frame	Models HX35PVQU6, HX35PVXU6, SX35PVQU6, SX35PVXU6, UX35PVNU6, UX35PVPU6, UX35PVQU6 and UX35PVXU6
12	9001760	Shipping Bracket	
13	9001291	Bolt	
14	9001250	Nut	

info@zipnasklade.ru
8(800)500-69-51

© Copyright, Alliance Laundry Systems LLC – DO NOT COPY or TRANSMIT

Frame (Drawing 2 of 2)

All Models Except HX18PVQU6, HX18PVXU6, HX25PVQU6, HX25PVXU6, HX35PVQU6, HX35PVXU6, SX18PVQU6, SX18PVXU6, SX25PVQU6, SX25PVXU6, SX35PVQU6, SX35PVXU6, UX18PVNU6, UX18PVPU6, UX18PVQU6, UX18PVXU6, UX25PVNU6, UX25PVPU6, UX25PVQU6, UX25PVXU6, UX35PVNU6, UX35PVPU6, UX35PVQU6 and UX35PVXU6

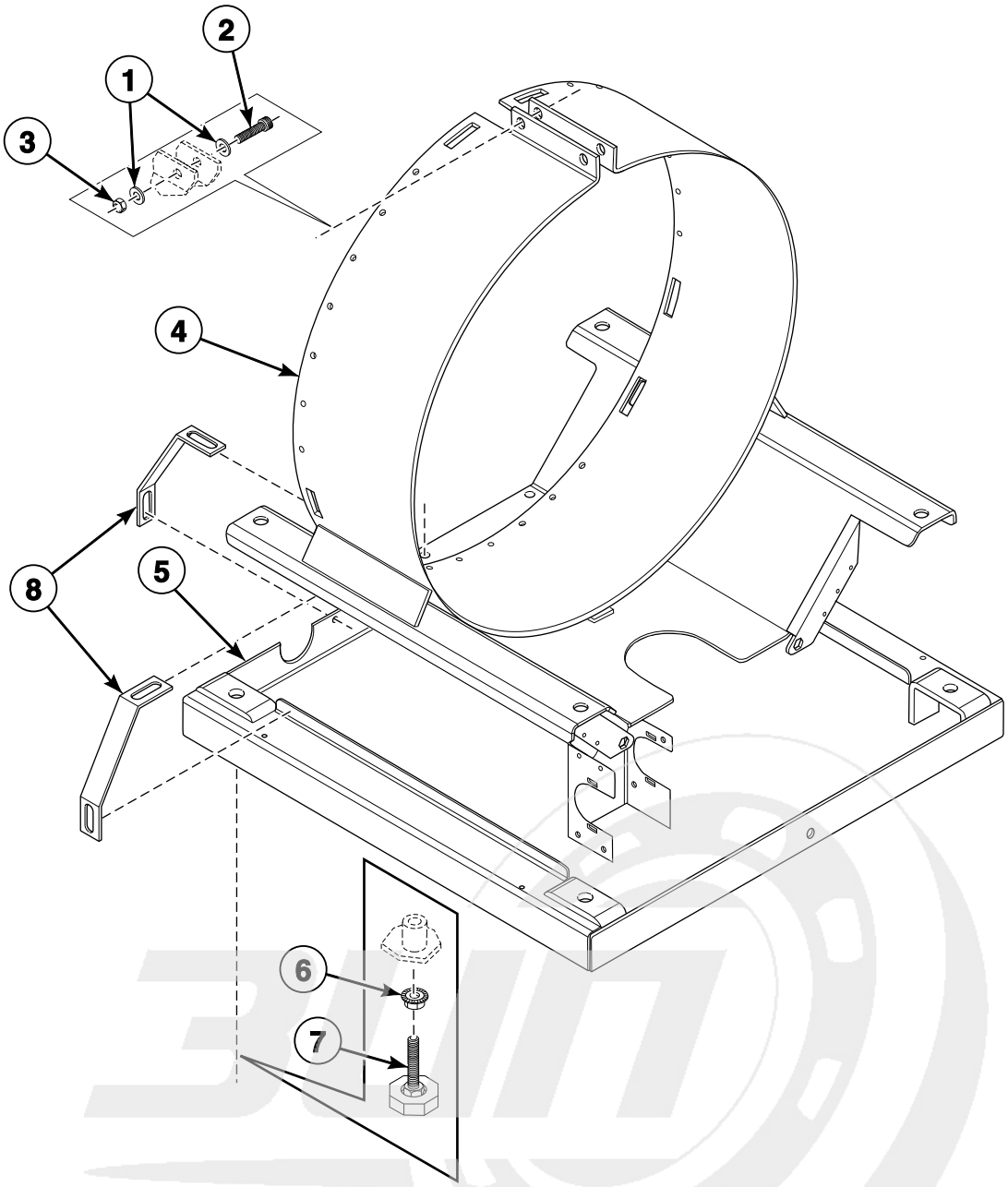

CFD261P_9001004

info@zipnasklade.ru
8(800)500-69-51

© Copyright, Alliance Laundry Systems LLC – DO NOT COPY or TRANSMIT

Frame (Drawing 2 of 2)

REF	PART NO.	DESCRIPTION	COMMENTS
1	9001212	Washer	
2	9001300	Screw	
3	9001264	Nut	
4	9001914	Tub Support	Models HX018PVQM7, HX018PVXM7, HX18PVQM6, HX18PVQM7, HX18PVXM6, HX18PVXM7, SX018PVPA7, SX018PVQM7, SX018PVXM7, SX18PVPA7, SX18PVQM6, SX18PVQM7, SX18PVXM6, SX18PVXM7, UX018PVNA7, UX018PVPA7, UX018PVQA7, UX018PVQM7, UX018PVXA7, UX018PVXM7, UX18PVNA6, UX18PVNA7, UX18PVPA6, UX18PVPA7, UX18PVQA6, UX18PVQA7, UX18PVQM6, UX18PVQM7, UX18PVXA6, UX18PVXA7, UX18PVXM6 and UX18PVXM7
	N/A	Tub Support	Models HX025PVQM7, HX025PVXM7, HX25PVQM6, HX25PVQM7, HX25PVXM6, HX25PVXM7, SX025PVQM7, SX025PVXM7, SX25PVQM6, SX25PVQM7, SX25PVXM6, SX25PVXM7, UX025PVNA7, UX025PVPA7, UX025PVQA7, UX025PVQM7, UX025PVXA7, UX025PVXM7, UX25PVNA6, UX25PVNA7, UX25PVPA6, UX25PVPA7, UX25PVQA6, UX25PVQA7, UX25PVQM6, UX25PVQM7, UX25PVXA6, UX25PVXA7, UX25PVXM6 and UX25PVXM7
	9002052	Tub Support	Models HX035PVQM7, HX035PVXM7, HX35PVQM6, HX35PVQM7, HX35PVXM6, HX35PVXM7, SX035PVNM7, SX035PVQM7, SX035PVXM7, SX35PVNM7, SX35PVQM6, SX35PVQM7, SX35PVXM6, SX35PVXM7, UX035PVNA7, UX035PVPA7, UX035PVQA7, UX035PVQM7, UX035PVXA7, UX035PVXM7, UX35PVNA6, UX35PVNA7, UX35PVPA6, UX35PVPA7, UX35PVQA6, UX35PVQA7, UX35PVQM6, UX35PVQM7, UX35PVXA6, UX35PVXA7, UX35PVXM6 and UX35PVXM7
5	9001915	Frame	Models HX018PVQM7, HX018PVXM7, HX18PVQM6, HX18PVQM7, HX18PVXM6, HX18PVXM7, SX018PVPA7, SX018PVQM7, SX018PVXM7, SX18PVPA7, SX18PVQM6, SX18PVQM7, SX18PVXM6, SX18PVXM7, UX018PVNA7, UX018PVPA7, UX018PVQA7, UX018PVQM7, UX018PVXA7, UX018PVXM7, UX18PVNA6, UX18PVNA7, UX18PVPA6, UX18PVPA7, UX18PVQA6, UX18PVQA7, UX18PVQM6, UX18PVQM7, UX18PVXA6, UX18PVXA7, UX18PVXM6 and UX18PVXM7
	9002070	Frame	Models HX025PVQM7, HX025PVXM7, HX25PVQM6, HX25PVQM7, HX25PVXM6, HX25PVXM7, SX025PVQM7, SX025PVXM7, SX25PVQM6, SX25PVQM7, SX25PVXM6, SX25PVXM7, UX025PVNA7, UX025PVPA7, UX025PVQA7, UX025PVQM7, UX025PVXA7, UX025PVXM7, UX25PVNA6, UX25PVNA7, UX25PVPA6, UX25PVPA7, UX25PVQA6, UX25PVQA7, UX25PVQM6, UX25PVQM7, UX25PVXA6, UX25PVXA7, UX25PVXM6 and UX25PVXM7
	9002053	Frame	Models HX035PVQM7, HX035PVXM7, HX35PVQM6, HX35PVQM7, HX35PVXM6, HX35PVXM7, SX035PVNM7, SX035PVQM7, SX035PVXM7, SX35PVNM7, SX35PVQM6, SX35PVQM7, SX35PVXM6, SX35PVXM7, UX035PVNA7, UX035PVPA7, UX035PVQA7, UX035PVQM7, UX035PVXA7, UX035PVXM7, UX35PVNA6, UX35PVNA7, UX35PVPA6, UX35PVPA7, UX35PVQA6, UX35PVQA7, UX35PVQM6, UX35PVQM7, UX35PVXA6, UX35PVXA7, UX35PVXM6 and UX35PVXM7
6	9001916	Nut	
7	9001621	Leveling Leg	
8	185/00009/12	Shipping Brace	

N/A = Part no longer available

info@zipnasklade.ru
8(800)500-69-51

© Copyright, Alliance Laundry Systems LLC – DO NOT COPY or TRANSMIT

Shock and Spring Assembly (Drawing 1 of 2)

Models HX18PVQU6, HX18PVXU6, HX25PVQU6, HX25PVXU6, HX35PVQU6, HX35PVXU6, SX18PVQU6, SX18PVXU6, SX25PVQU6, SX25PVXU6, SX35PVQU6, SX35PVXU6, UX18PVNU6, UX18PVPU6, UX18PVQU6, UX18PVXU6, UX25PVNU6, UX25PVPU6, UX25PVQU6, UX25PVXU6, UX35PVNU6, UX35PVPU6, UX35PVQU6 and UX35PVXU6

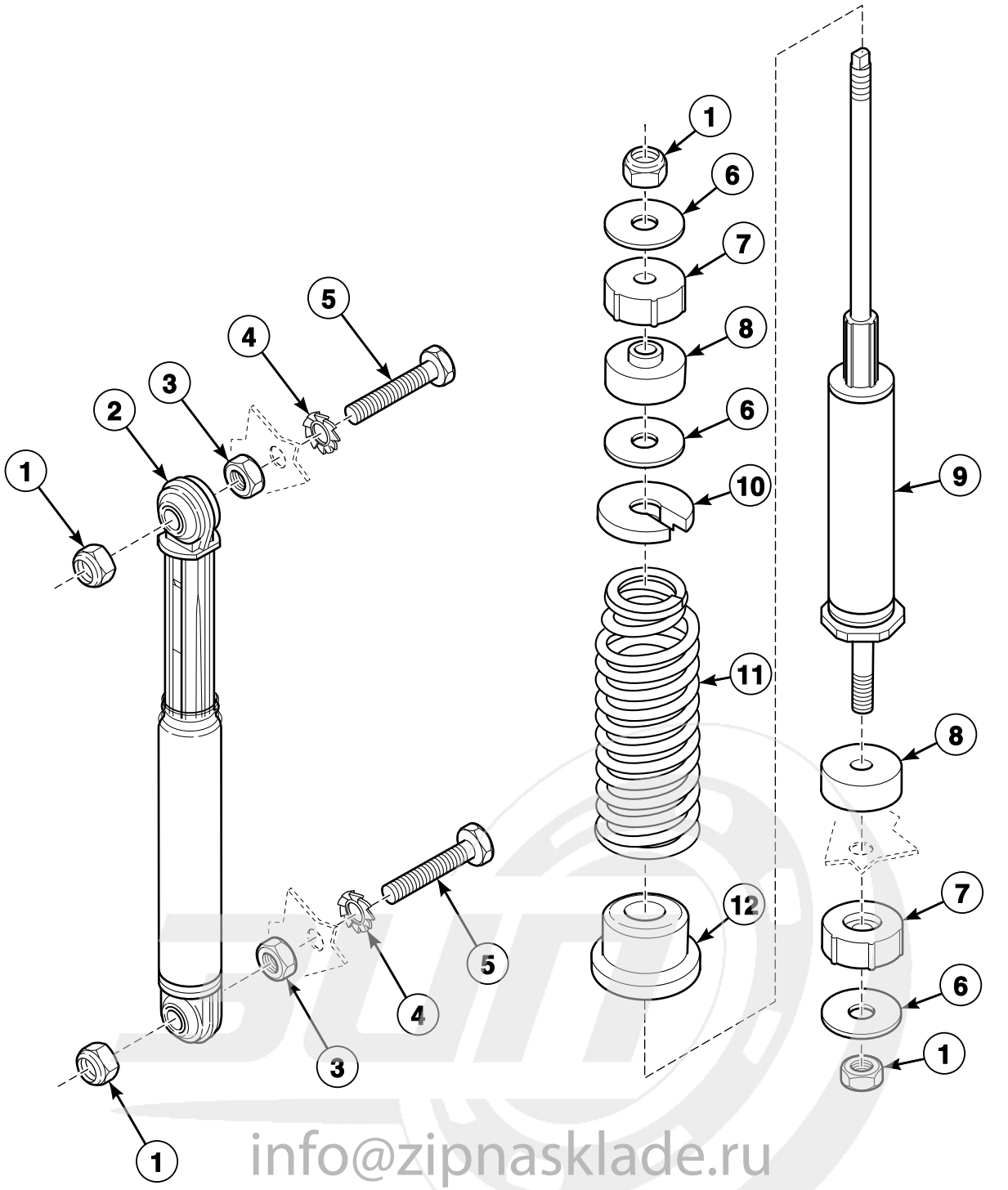

info@zipnasklade.ru
8(800)500-69-51

© Copyright, Alliance Laundry Systems LLC – DO NOT COPY or TRANSMIT

Shock and Spring Assembly (Drawing 1 of 2)

REF	PART NO.	DESCRIPTION	COMMENTS
1	9001263	Nut	
2	9001614	Shock Absorber	
3	9001248	Nut	
4	9001239	Washer	
5	206/00052/00	Bolt	
6	9001220	Washer	
7	9001616	Fastening Rubber	
8	9001615	Fastening Rubber	
9	9001613	Shock Absorber	
	247/00003/00	Shock Absorber	Includes items 6, 8, 10, 12 and 9001612 Suspension Spring
10	9001611	Spring Holder Top	
11	9001609	Suspension Spring	Models HX35PVQU6, HX35PVXU6, SX35PVQU6, SX35PVXU6, UX35PVNU6, UX35PVPU6, UX35PVQU6 and UX35PVXU6 4 used; Black
	9001612	Suspension Spring	Models HX18PVQU6, HX18PVXU6, SX18PVQU6, SX18PVXU6, UX18PVNU6, UX18PVPU6, UX18PVQU6 and UX18PVXU6 1 used; Models HX25PVQU6, HX25PVXU6, SX25PVQU6, SX25PVXU6, UX25PVNU6, UX25PVPU6, UX25PVQU6 and UX25PVXU6 3 used; Models HX35PVQU6, HX35PVXU6, SX35PVQU6, SX35PVXU6, UX35PVNU6, UX35PVPU6, UX35PVQU6 and UX35PVXU6 4 used; Blue
	9001618	Suspension Spring	Models HX18PVQU6, HX18PVXU6, SX18PVQU6, SX18PVXU6, UX18PVNU6, UX18PVPU6, UX18PVQU6 and UX18PVXU6 3 used; Models HX25PVQU6, HX25PVXU6, SX25PVQU6, SX25PVXU6, UX25PVNU6, UX25PVPU6, UX25PVQU6 and UX25PVXU6 1 used; Red
	247/00002/03	Shock Absorber	Includes items 6, 8 and 9001618 Suspension Spring
12	9001610	Spring Seat Bottom	

info@zipnasklade.ru
8(800)500-69-51

© Copyright, Alliance Laundry Systems LLC – DO NOT COPY or TRANSMIT

Shock and Spring Assembly (Drawing 2 of 2)

All Models Except HX18PVQU6, HX18PVXU6, HX25PVQU6, HX25PVXU6, HX35PVQU6, HX35PVXU6, SX18PVQU6, SX18PVXU6, SX25PVQU6, SX25PVXU6, SX35PVQU6, SX35PVXU6, UX18PVNU6, UX18PVPU6, UX18PVQU6, UX18PVXU6, UX25PVNU6, UX25PVPU6, UX25PVQU6, UX25PVXU6, UX35PVNU6, UX35PVPU6, UX35PVQU6 and UX35PVXU6

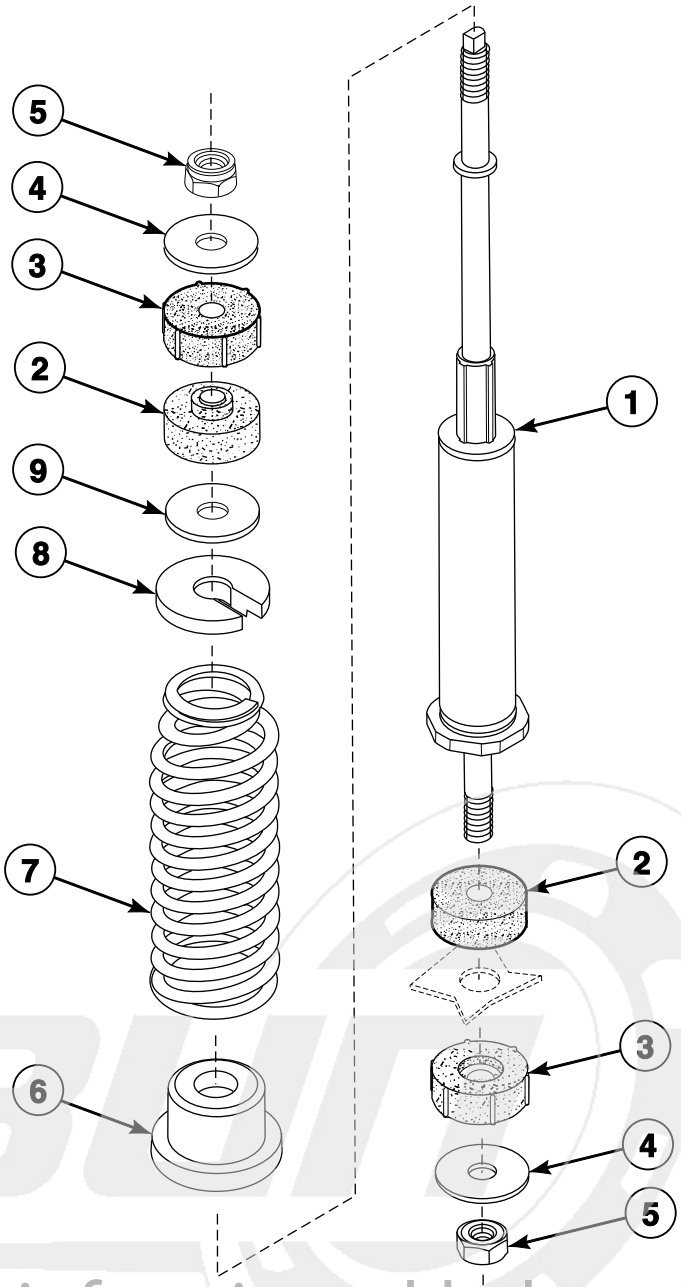

info@zipnasklade.ru
8(800)500-69-51

CFD140P_9001004

© Copyright, Alliance Laundry Systems LLC – DO NOT COPY or TRANSMIT

Shock and Spring Assembly (Drawing 2 of 2)

REF	PART NO.	DESCRIPTION	COMMENTS
1	9001613	Shock Absorber	
2	9001615	Fastening Rubber	
3	9001616	Fastening Rubber	
4	9001220	Washer	
5	9001263	Nut	
6	9001610	Spring Seat Bottom	
7	9001609	Suspension Spring	Models HX035PVQM7, HX035PVXM7, HX35PVQM6, HX35PVQM7, HX35PVXM6, HX35PVXM7, SX035PVNM7, SX035PVQM7, SX035PVXM7, SX35PVNM7, SX35PVQM6, SX35PVQM7, SX35PVXM6, SX35PVXM7, UX035PVNA7, UX035PVPA7, UX035PVQA7, UX035PVQM7, UX035PVXA7, UX035PVXM7, UX35PVNA6, UX35PVNA7, UX35PVPA6, UX35PVPA7, UX35PVQA6, UX35PVQA7, UX35PVQM6, UX35PVQM7, UX35PVXA6, UX35PVXA7, UX35PVXM6 and UX35PVXM7; 8 used; Black
	9001618	Suspension Spring	Models HX018PVQM7, HX018PVXM7, HX025PVQM7, HX025PVXM7, HX18PVQM6, HX18PVQM7, HX18PVXM6, HX18PVXM7, HX25PVQM6, HX25PVQM7, HX25PVXM6, HX25PVXM7, SX018PVPA7, SX018PVQM7, SX018PVXM7, SX025PVQM7, SX025PVXM7, SX18PVPA7, SX18PVQM6, SX18PVQM7, SX18PVXM6, SX18PVXM7, SX25PVQM6, SX25PVQM7, SX25PVXM6, SX25PVXM7, UX018PVNA7, UX018PVPA7, UX018PVQA7, UX018PVQM7, UX018PVXA7, UX018PVXM7, UX025PVNA7, UX025PVPA7, UX025PVQA7, UX025PVQM7, UX025PVXA7, UX025PVXM7, UX18PVNA6, UX18PVNA7, UX18PVPA6, UX18PVPA7, UX18PVQA6, UX18PVQA7, UX18PVQM6, UX18PVQM7, UX18PVXA6, UX18PVXA7, UX18PVXM6, UX18PVXM7, UX25PVNA6, UX25PVNA7, UX25PVPA6, UX25PVPA7, UX25PVQA6, UX25PVQA7, UX25PVQM6, UX25PVQM7, UX25PVXA6, UX25PVXA7, UX25PVXM6 and UX25PVXM7; 4 used
	247/00002/03	Shock Absorber	Includes items 2, 4 and 9001618 Suspension Spring
8	9001611	Spring Holder Top	
9	9001220	Washer	

info@zipnasklade.ru
8(800)500-69-51

© Copyright, Alliance Laundry Systems LLC – DO NOT COPY or TRANSMIT

Shell and Basket (Drawing 1 of 3)

Models HX18PVQU6, HX18PVXU6, HX25PVQU6, HX25PVXU6, HX35PVQU6, HX35PVXU6, SX18PVQU6, SX18PVXU6, SX25PVQU6, SX25PVXU6, SX35PVQU6, SX35PVXU6, UX18PVNU6, UX18PVPU6, UX18PVQU6, UX18PVXU6, UX25PVNU6, UX25PVPU6, UX25PVQU6, UX25PVXU6, UX35PVNU6, UX35PVPU6, UX35PVQU6 and UX35PVXU6

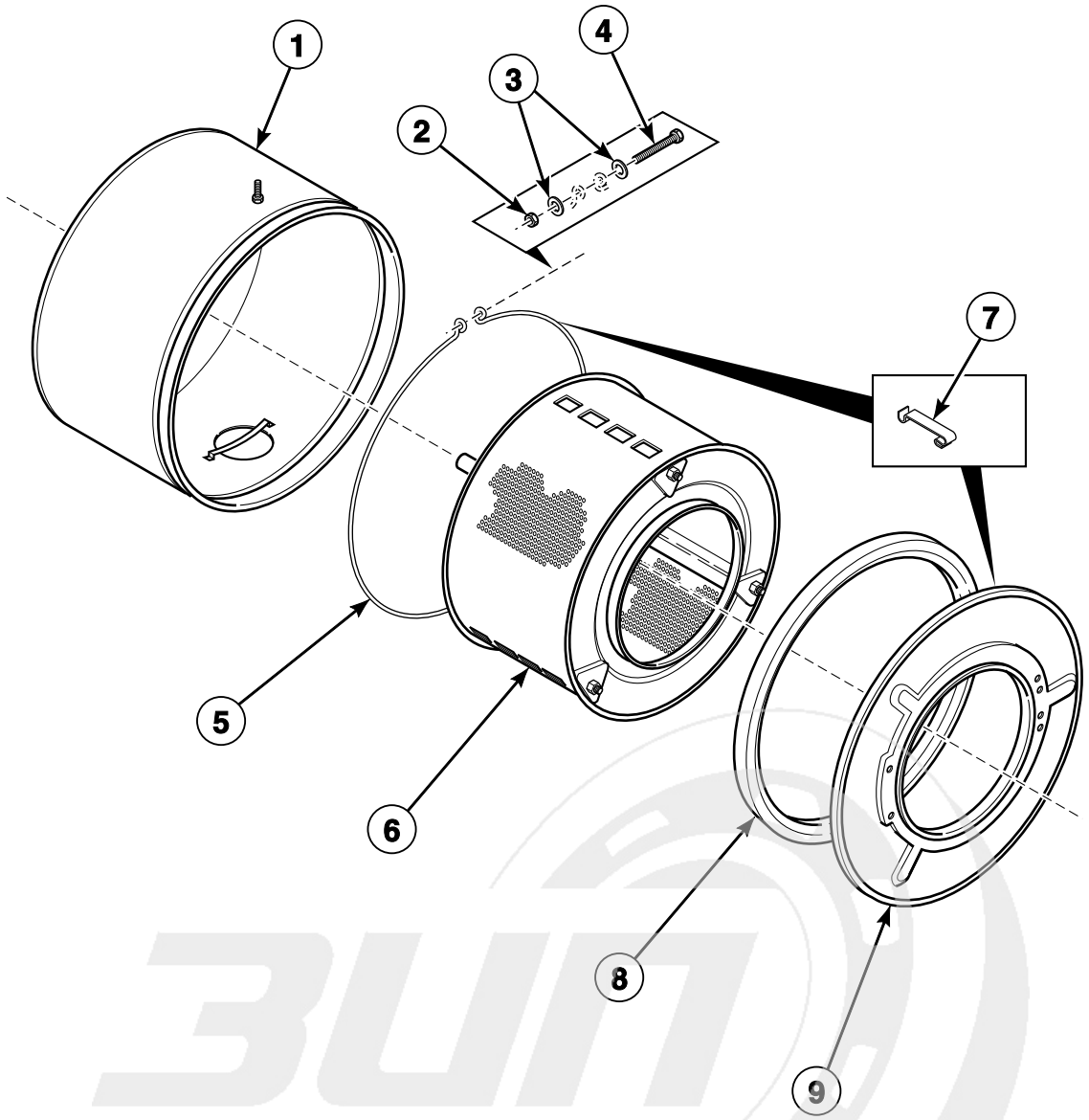

CFD3P_9001004

info@zipnasklade.ru
8(800)500-69-51

© Copyright, Alliance Laundry Systems LLC – DO NOT COPY or TRANSMIT

Shell and Basket (Drawing 1 of 3)

REF	PART NO.	DESCRIPTION	COMMENTS
1	9001114	Tub	Models HX18PVQU6, HX18PVXU6, SX18PVQU6, SX18PVXU6, UX18PVNU6, UX18PVPU6, UX18PVQU6 and UX18PVXU6; Standard models
	9001115	Tub	Models HX18PVQU6, HX18PVXU6, SX18PVQU6, SX18PVXU6, UX18PVNU6, UX18PVPU6, UX18PVQU6 and UX18PVXU6; Steam heat models
	9001113	Tub	Models HX18PVQU6, HX18PVXU6, SX18PVQU6, SX18PVXU6, UX18PVNU6, UX18PVPU6, UX18PVQU6 and UX18PVXU6; Electric heat models
	9001109	Tub	Models HX25PVQU6, HX25PVXU6, SX25PVQU6, SX25PVXU6, UX25PVNU6, UX25PVPU6, UX25PVQU6 and UX25PVXU6; Standard models
	9001112	Tub	Models HX25PVQU6, HX25PVXU6, SX25PVQU6, SX25PVXU6, UX25PVNU6, UX25PVPU6, UX25PVQU6 and UX25PVXU6; Steam heat models
	9001108	Tub	Models HX25PVQU6, HX25PVXU6, SX25PVQU6, SX25PVXU6, UX25PVNU6, UX25PVPU6, UX25PVQU6 and UX25PVXU6; Electric and steam heat models
	9001111	Tub	Models HX35PVQU6, HX35PVXU6, SX35PVQU6, SX35PVXU6, UX35PVNU6, UX35PVPU6, UX35PVQU6 and UX35PVXU6; Standard models
	9001690	Tub	Models HX35PVQU6, HX35PVXU6, SX35PVQU6, SX35PVXU6, UX35PVNU6, UX35PVPU6, UX35PVQU6 and UX35PVXU6; Electric heat models
	9001691	Tub	Models HX35PVQU6, HX35PVXU6, SX35PVQU6, SX35PVXU6, UX35PVNU6, UX35PVPU6, UX35PVQU6 and UX35PVXU6; Steam heat models
2	9001254	Nut	
3	9001214	Washer	
4	206/00032/00	Bolt	
5	9001463	Tub Front Ring Clamp	Models HX18PVQU6, HX18PVXU6, HX25PVQU6, HX25PVXU6, SX18PVQU6, SX18PVXU6, SX25PVQU6, SX25PVXU6, UX18PVNU6, UX18PVPU6, UX18PVQU6, UX18PVXU6, UX25PVNU6, UX25PVPU6, UX25PVQU6 and UX25PVXU6
	9001484	Tub Front Ring Clamp	Models HX35PVQU6, HX35PVXU6, SX35PVQU6, SX35PVXU6, UX35PVNU6, UX35PVPU6, UX35PVQU6 and UX35PVXU6; 15 required
6	111/01954/00	Cylinder and Trunnion Assembly	Models HX18PVQU6, HX18PVXU6, SX18PVQU6, SX18PVXU6, UX18PVNU6, UX18PVPU6, UX18PVQU6 and UX18PVXU6
	9001126	Cylinder and Trunnion Assembly	Models HX25PVQU6, HX25PVXU6, SX25PVQU6, SX25PVXU6, UX25PVNU6, UX25PVPU6, UX25PVQU6 and UX25PVXU6
	111/01962/00	Cylinder and Trunnion Assembly	Models HX35PVQU6, HX35PVXU6, SX35PVQU6, SX35PVXU6, UX35PVNU6, UX35PVPU6, UX35PVQU6 and UX35PVXU6
7	9001464	Tub Front Panel Clip	
8	223/00242/10	Tub Gasket	Models HX18PVQU6, HX18PVXU6, HX25PVQU6, HX25PVXU6, SX18PVQU6, SX25PVQU6, SX25PVXU6, UX18PVNU6, UX18PVPU6, UX18PVQU6, UX18PVXU6, UX25PVNU6, UX25PVPU6, UX25PVQU6 and UX25PVXU6
	223/00242/20	Tub Gasket	Models HX35PVQU6, HX35PVXU6, SX35PVQU6, SX35PVXU6, UX35PVNU6, UX35PVPU6, UX35PVQU6 and UX35PVXU6
9	9001102	Tub Front	Models HX18PVQU6, HX18PVXU6, HX25PVQU6, HX25PVXU6, SX18PVQU6, SX18PVXU6, SX25PVQU6, SX25PVXU6, UX18PVNU6, UX18PVPU6, UX18PVQU6, UX18PVXU6, UX25PVNU6, UX25PVPU6, UX25PVQU6 and UX25PVXU6
	9001136	Tub Front	Models HX35PVQU6, HX35PVXU6, SX35PVQU6, SX35PVXU6, UX35PVNU6, UX35PVPU6, UX35PVQU6 and UX35PVXU6

info@zipnaskladu.ru
8(800)500-10-51

© Copyright, Alliance Laundry Systems LLC – DO NOT COPY or TRANSMIT

Shell and Basket (Drawing 2 of 3)

Models HX18PVQM6, HX18PVXM6, HX25PVQM6, HX25PVXM6, HX35PVQM6, HX35PVXM6, SX18PVQM6, SX18PVXM6, SX25PVQM6, SX25PVXM6, SX35PVQM6, SX35PVXM6, UX18PVNA6, UX18PVPA6, UX18PVQA6, UX18PVQM6, UX18PVXA6, UX18PVXM6, UX25PVNA6, UX25PVPA6, UX25PVQA6, UX25PVQM6, UX25PVXA6, UX25PVXM6, UX35PVNA6, UX35PVPA6, UX35PVQA6, UX35PVQM6, UX35PVXA6 and UX35PVXM6

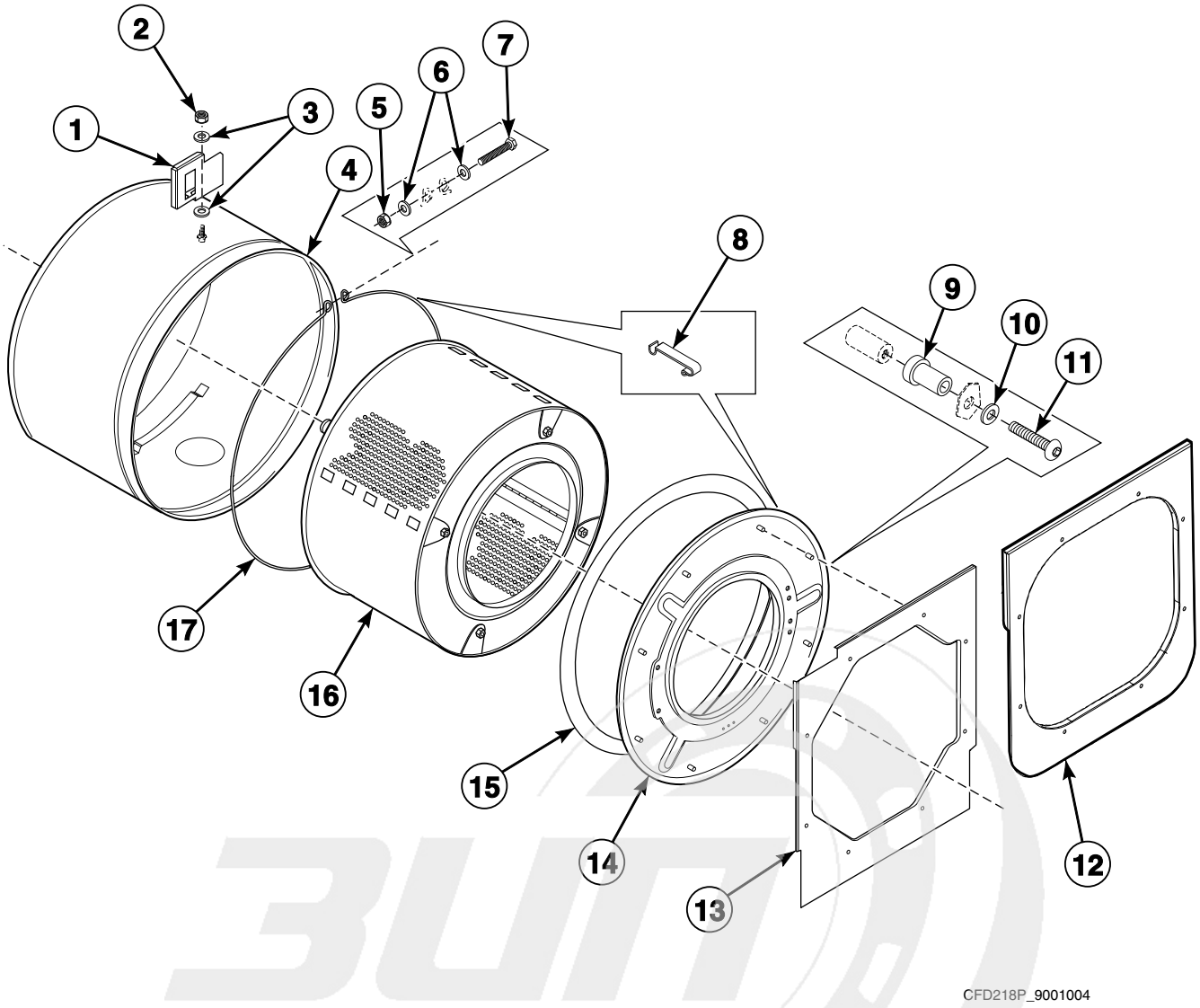

info@zipnasklade.ru
8(800)500-69-51

© Copyright, Alliance Laundry Systems LLC – DO NOT COPY or TRANSMIT

Shell and Basket (Drawing 2 of 3)

REF	PART NO.	DESCRIPTION	COMMENTS
1	9001917	Tilt Detector Plate	
2	9001263	Nut	
3	9001216	Washer	
4	9001919	Tub	18 pound standard and steam heat models
	9001918	Tub	18 pound electric heat models
	9002048	Outer Tub	25 pound electric heat models
	B12328701	Outer Tub	25 pound standard and steam heat models
	9002054	Outer Tub	35 pound electric heat models
	9002055	Outer Tub	35 pound standard and steam heat models
5	9001254	Nut	
6	9001214	Washer	
7	206/00032/00	Bolt	
8	9001464	Tub Front Panel Clip	15 required
9	N/A	Nut	
10	9001214	Washer	18 and 35 pound models
	9001235	Washer	25 pound models
11	9001657	Screw	
12	9002037	Front Panel	18 and 25 pound models
13	9002050	Front Panel	35 pound models
14	9002038	Front Shell	18 and 25 pound models
	9002056	Front Shell	35 pound models
15	223/00242/10	Tub Gasket	18 and 25 pound models
	223/00242/20	Tub Gasket	35 pound models
16	111/01917/00	Cylinder and Shaft Assembly	18 pound models
	B12326101	Drum and Axle	25 pound models
	B12326701	Drum and Axle	35 pound models
17	9001463	Tub Front Ring Clamp	18 and 25 pound models
	9001484	Tub Front Ring Clamp	35 pound models

N/A = Part no longer available

info@zipnasklade.ru
8(800)500-69-51

© Copyright, Alliance Laundry Systems LLC – DO NOT COPY or TRANSMIT

Shell and Basket (Drawing 3 of 3)

Models HX018PVQM7, HX018PVXM7, HX025PVQM7, HX025PVXM7, HX035PVQM7, HX035PVXM7, HX18PVQM7, HX18PVXM7, HX25PVQM7, HX25PVXM7, HX35PVQM7, HX35PVXM7, SX018PVPA7, SX018PVQM7, SX018PVXM7, SX025PVQM7, SX025PVXM7, SX035PVNM7, SX035PVQM7, SX035PVXM7, SX18PVPA7, SX18PVQM7, SX18PVXM7, SX25PVQM7, SX25PVXM7, SX35PVNM7, SX35PVQM7, SX35PVXM7, UX018PVNA7, UX018PVPA7, UX018PVQA7, UX018PVQM7, UX018PVXA7, UX018PVXM7, UX025PVNA7, UX025PVPA7, UX025PVQA7, UX025PVQM7, UX025PVXA7, UX025PVXM7, UX035PVNA7, UX035PVPA7, UX035PVQA7, UX035PVQM7, UX035PVXA7, UX035PVXM7, UX18PVNA7, UX18PVPA7, UX18PVQA7, UX18PVQM7, UX18PVXA7, UX18PVXM7, UX25PVNA7, UX25PVPA7, UX25PVQA7, UX25PVQM7, UX25PVXA7, UX25PVXM7, UX35PVNA7, UX35PVPA7, UX35PVQA7, UX35PVQM7, UX35PVXA7 and UX35PVXM7

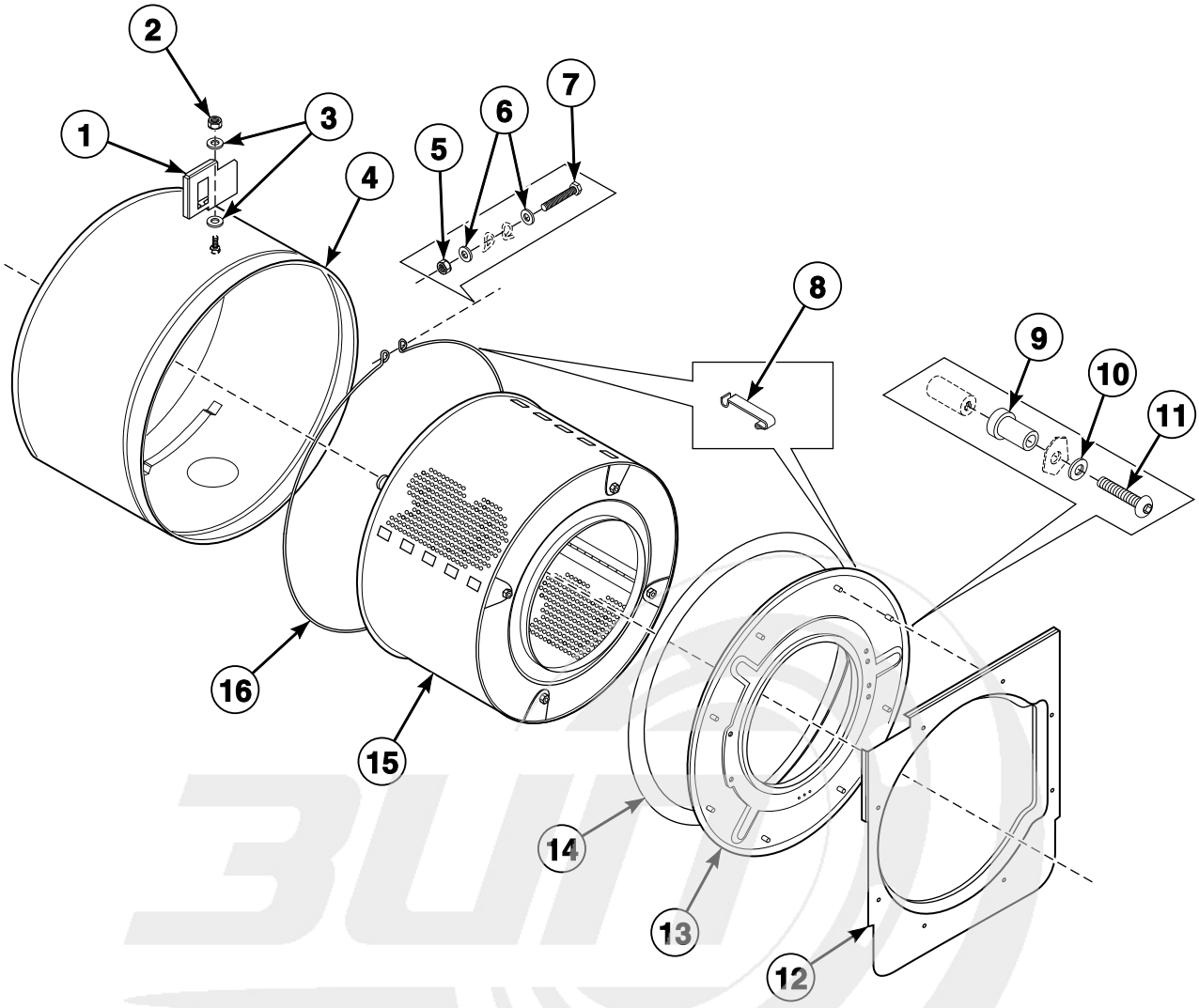

info@zipnasklade.ru
8(800)500-69-51

CFD211P_9001004

© Copyright, Alliance Laundry Systems LLC – DO NOT COPY or TRANSMIT

Shell and Basket (Drawing 3 of 3)

REF	PART NO.	DESCRIPTION	COMMENTS
1	9001917	Tilt Detector Plate	
2	9001263	Nut	
3	9001216	Washer	
4	9001919	Tub	18 pound standard and steam heat models
	9001918	Tub	18 pound electric heat models
	9002048	Outer Tub	25 pound electric heat models
	B12328701	Outer Tub	25 pound standard and steam heat models
	9002054	Outer Tub	35 pound electric heat models
	9002055	Outer Tub	35 pound standard and steam heat models
5	9001254	Nut	
6	9001214	Washer	
7	206/00032/00	Bolt	
8	9001464	Tub Front Panel Clip	15 required
9	N/A	Nut	
10	9001214	Washer	18 and 35 pound models
	9001235	Washer	25 pound models
11	9001657	Screw	
12	111/01897/00	Front Panel	
13	9002038	Front Shell	18 and 25 pound models
	9002056	Front Shell	35 pound models
14	223/00242/10	Tub Gasket	18 and 25 pound models
	223/00242/20	Tub Gasket	35 pound models
15	111/01917/00	Cylinder and Shaft Assembly	18 pound models; Models through 1/30/11; Requires 9001699 Shaft Seal Holder
	B12542701	Basket Kit	18 pound models through 1/30/11; Includes B12379701 Basket and 3881P Bearing Kit
	B12379701	Basket and Shaft Assembly	18 pound models; 3 mm basket hole diameter; Models starting 1/31/11; Requires B12333601 Seal Plate Assembly
	B12379801	Basket and Shaft Assembly	18 pound models; 9 mm basket hole diameter; Models starting 1/31/11; Requires B12333601 Seal Plate Assembly
	B12326101	Drum and Axle	25 pound models; Models through 1/30/11; Requires 9001699 Shaft Seal Holder
	B12542801	Basket Kit	25 pound models through 1/30/11; Includes B12379901 Basket and 3881P Bearing Kit
	B12379901	Basket and Shaft Assembly	25 pound models; 3 mm basket hole diameter; Models starting 1/31/11; Requires B12333601 Seal Plate Assembly
	B12380001	Basket and Shaft Assembly	25 pound models; 9 mm basket hole diameter; Models starting 1/31/11; Requires B12333601 Seal Plate Assembly
	B12326701	Drum and Axle	35 pound models; Models through 1/30/11; Requires 9001117 Seal Holder Assembly
	B12542901	Basket Kit	35 pound models through 1/30/11; Includes B12380101 Basket and 3882P Bearing Kit
	B12380501	Basket and Shaft Assembly	35 pound models; 3 mm basket hole diameter; Models starting 1/31/11; Requires B12333701 Seal Plate Assembly
	B12380601	Basket and Shaft Assembly	35 pound models; 9 mm basket hole diameter; Models starting 1/31/11; Requires B12333701 Seal Plate Assembly
16	9001463	Tub Front Ring Clamp	18 and 25 pound models
	9001484	Tub Front Ring Clamp	35 pound models

N/A = Part no longer available

info@zipnasklade.ru
8(800)500-69-51

© Copyright, Alliance Laundry Systems LLC – DO NOT COPY or TRANSMIT

Bearing Assembly

Models HX18PVQU6, HX18PVXU6, HX25PVQU6, HX25PVXU6, HX35PVQU6, HX35PVXU6, SX18PVQU6, SX18PVXU6, SX25PVQU6, SX25PVXU6, SX35PVQU6, SX35PVXU6, UX18PVNU6, UX18PVPU6, UX18PVQU6, UX18PVXU6, UX25PVNU6, UX25PVPU6, UX25PVQU6, UX25PVXU6, UX35PVNU6, UX35PVPU6, UX35PVQU6 and UX35PVXU6

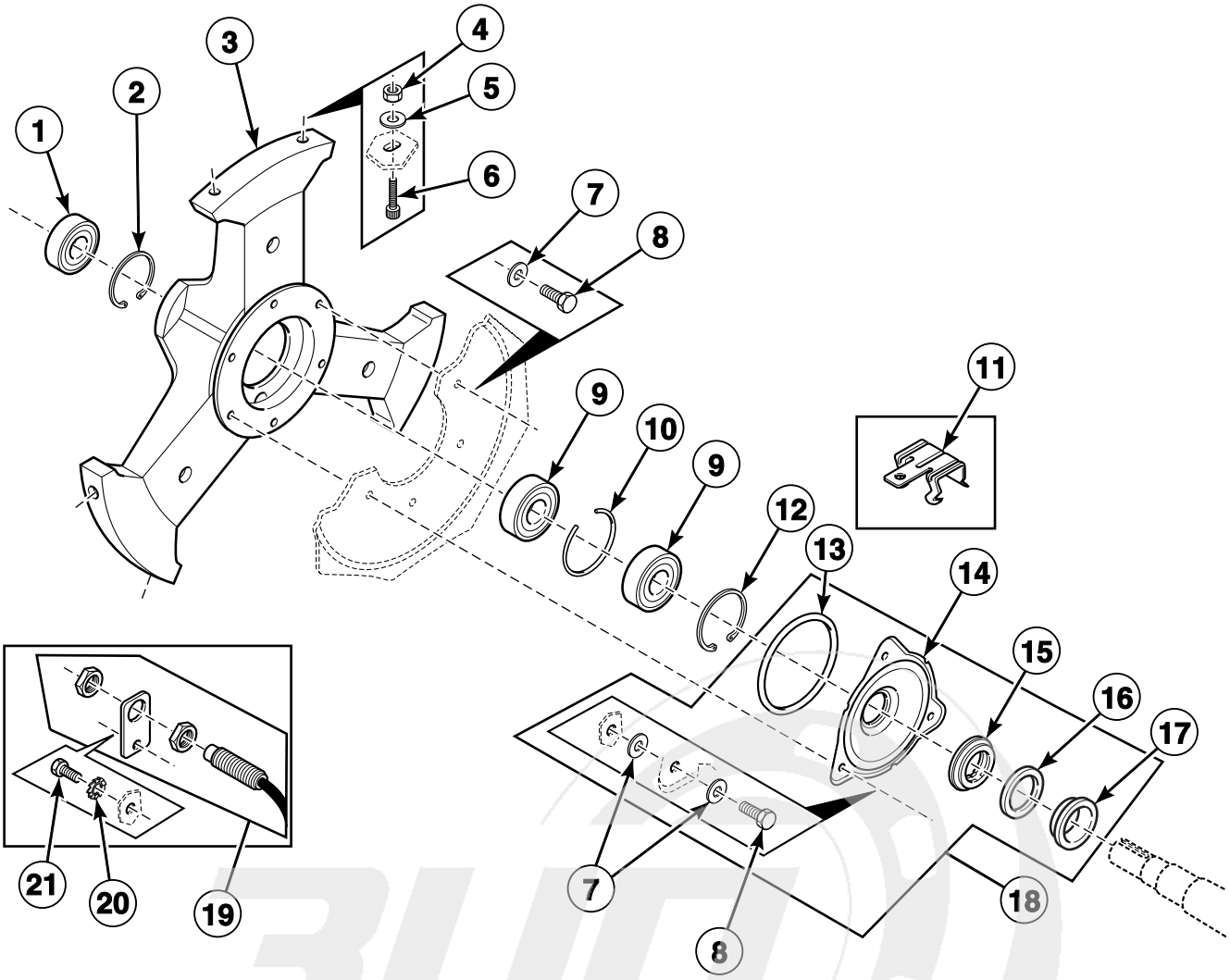

CFD268P_9001004

info@zipnasklade.ru
8(800)500-69-51

© Copyright, Alliance Laundry Systems LLC – DO NOT COPY or TRANSMIT

Bearing Assembly

REF	PART NO.	DESCRIPTION	COMMENTS
	889P3	Bearing Kit	18 and 25 pound models; Includes items 1, 7-9, 18, and 223/00242/10 Tub Front Gasket
	890P3	Bearing Replacement Kit	35 pound models; Includes items 1, 7-9, 18 and 223/00242/20 Tub Front Gasket
	383P4	Bearing Replacement Tool Kit	18 and 25 pound models
	384P4	Bearing Replacement Tool Kit	35 pound models
1	215/00001/12	Ball Bearing	18 and 25 pound models
	F100137P	Bearing	35 pound models
2	9001622	Retainer Ring	18 and 25 pound models
	9001453	Retainer Ring	35 pound models
3	9001028	Bearing Housing Assembly	18 and 25 pound models; Includes items 1, 2, 9, 10 and 12
	9001031	Bearing Housing Assembly	35 pound models; Includes items 1, 2, 9, 10 and 12
4	9001264	Nut	18 and 25 pound models
	9001265	Nut	35 pound models
5	9001219	Washer	18 and 25 pound models
	9001218	Washer	35 pound models
6	9001300	Screw	18 and 25 pound models
	9001303	Screw	35 pound models
7	9001225	Washer	
8	9001272	Bolt	
9	215/00001/13	Ball Bearing	18 and 25 pound models
	9001457	Ball Bearing	35 pound models
10	9001448	Retainer Ring	18 and 25 pound models
	9001449	Retainer Ring	35 pound models
11	9001559	Caddy Bracket	4H58-4
	9001560	Caddy Bracket	4H912
12	9001446	Retainer Ring	18 and 25 pound models
	9001447	Retainer Ring	35 pound models
13	9001460	O-Ring	
14	9001032	Seal Cover	18 and 25 pound models
	9001116	Seal Plate	35 pound models
15	9001461	Shaft Seal	18 and 25 pound models
	9001482	Shaft Seal	35 pound models
16	9001462	Counter Ring	18 and 25 pound models
	9001483	Counter Ring	35 pound models
17	217/00100/00	Bearing Spacer	18 and 25 pound models
	9001980	Bearing Spacer	35 pound models
18	9001699	Shaft Seal Holder	18 and 25 pound models; Includes items 7, 8 and 13-17
	9001117	Seal Holder Assembly	35 pound models; Includes items 7, 8 and 13-17
19	210/00074/00	Speed Detector	
20	9001241	Washer	
21	9001274	Bolt	

info@zipnasklade.ru
8(800)500-69-51

© Copyright, Alliance Laundry Systems LLC – DO NOT COPY or TRANSMIT

Bearing Assembly - Models Through 1/30/11

All Models Except HX18PVQU6, HX18PVXU6, HX25PVQU6, HX25PVXU6, HX35PVQU6, HX35PVXU6, SX18PVQU6, SX18PVXU6, SX25PVQU6, SX25PVXU6, SX35PVQU6, SX35PVXU6, UX18PVNU6, UX18PVPU6, UX18PVQU6, UX18PVXU6, UX25PVNU6, UX25PVPU6, UX25PVQU6, UX25PVXU6, UX35PVNU6, UX35PVPU6, UX35PVQU6 and UX35PVXU6

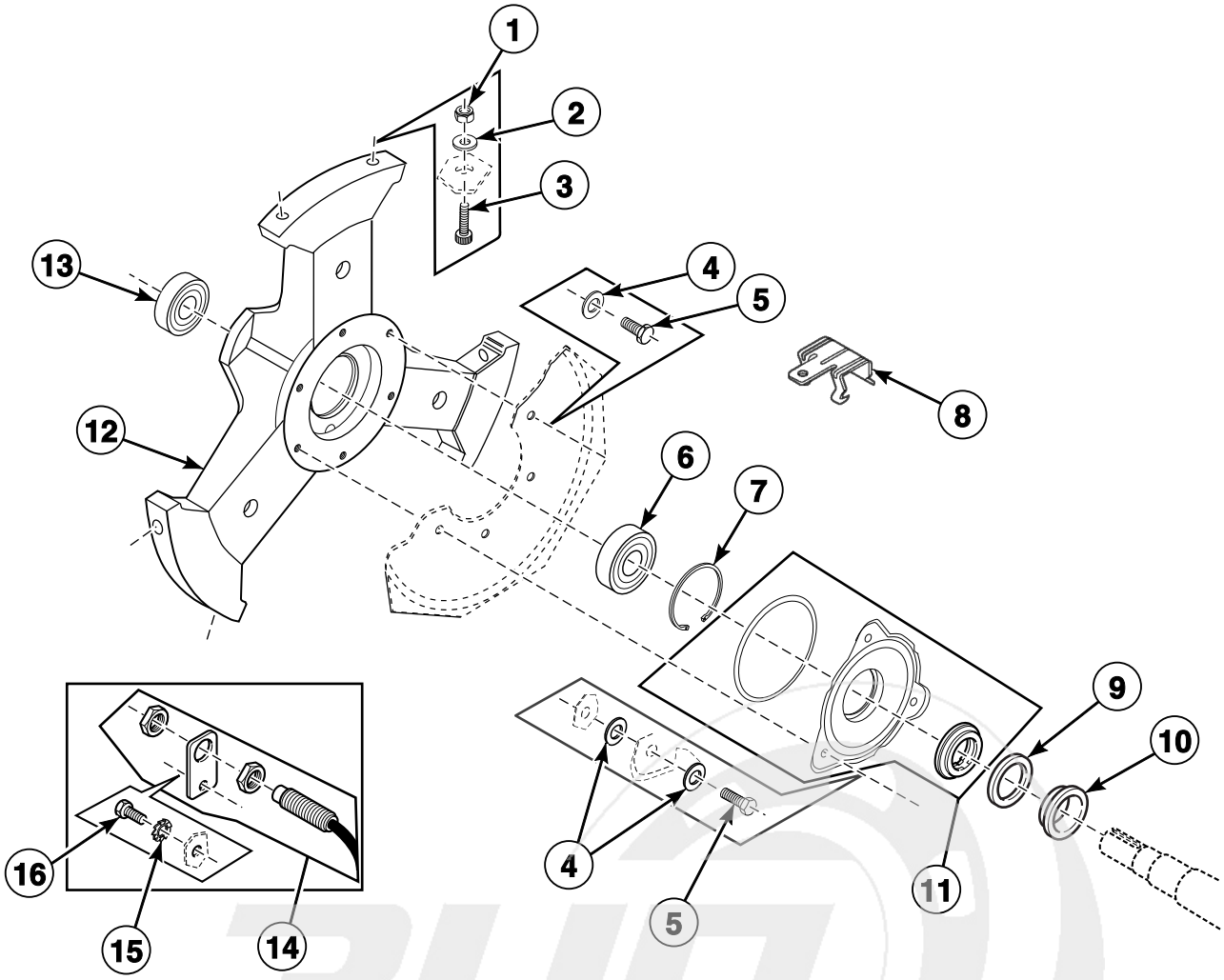

CFD269P_9001004

info@zipnasklade.ru
8(800)500-69-51

© Copyright, Alliance Laundry Systems LLC – DO NOT COPY or TRANSMIT

Bearing Assembly - Models Through 1/30/11

REF	PART NO.	DESCRIPTION	COMMENTS
	383P4	Bearing Replacement Tool Kit	18 and 25 pound models
	384P4	Bearing Replacement Tool Kit	35 pound models
	387P4	Bearing Replacement Kit	18 and 25 pound models; Includes items 4-6, 10, 11, 13, 223/00242/10 Tub Gasket and F8382001P Deflector Inlet
	388P4	Bearing Replacement Kit	35 pound models; Includes items 4-6, 10, 11, 13, 223/00242/20 Tub Gasket and F8382001P Deflector Inlet
1	9001264	Nut	
2	9001218	Washer	
3	9001300	Screw	18 and 25 pound models
	9001303	Screw	35 pound models
4	9001225	Washer	
5	9001272	Bolt	
6	F100137P	Bearing	18 and 25 pound models
	9001438	Ball Bearing	35 pound models
7	9001453	Retainer Ring	18 and 25 pound models
	9001440	Retainer Ring	35 pound models
8	9001559	Caddy Bracket	4H58-4
	9001560	Caddy Bracket	4H912
9	217/00100/00	Bearing Spacer	18 and 25 pound models
	9001980	Bearing Spacer	35 pound models
10	9001462	Counter Ring	18 and 25 pound models
	9001483	Counter Ring	35 pound models
11	9001699	Shaft Seal Holder	18 pound models: Requires 111/01917/00 Cylinder and Shaft Assembly; 25 pound models: Requires B12326101 Drum and Axle
	9001117	Seal Holder Assembly	35 pound models; Requires 9002057 Basket and Shaft Assembly
12	152/10117/01	Bearing Housing Assembly	18 and 25 pound models; Includes items 6, 7 and 13
	152/10118/01	Bearing Housing Assembly	35 pound models; Includes items 6, 7 and 13
13	215/00001/13	Ball Bearing	18 and 25 pound models
	F100134	Bearing	35 pound models
14	210/00074/00	Speed Detector	
15	9001241	Washer	
16	9001274	Bolt	

info@zipnasklade.ru
8(800)500-69-51

© Copyright, Alliance Laundry Systems LLC – DO NOT COPY or TRANSMIT

Bearing Assembly - Models Starting 1/31/11

All Models Except HX18PVQU6, HX18PVXU6, HX25PVQU6, HX25PVXU6, HX35PVQU6, HX35PVXU6, SX18PVQU6, SX18PVXU6, SX25PVQU6, SX25PVXU6, SX35PVQU6, SX35PVXU6, UX18PVNU6, UX18PVPU6, UX18PVQU6, UX18PVXU6, UX25PVNU6, UX25PVPU6, UX25PVQU6, UX25PVXU6, UX35PVNU6, UX35PVPU6, UX35PVQU6 and UX35PVXU6

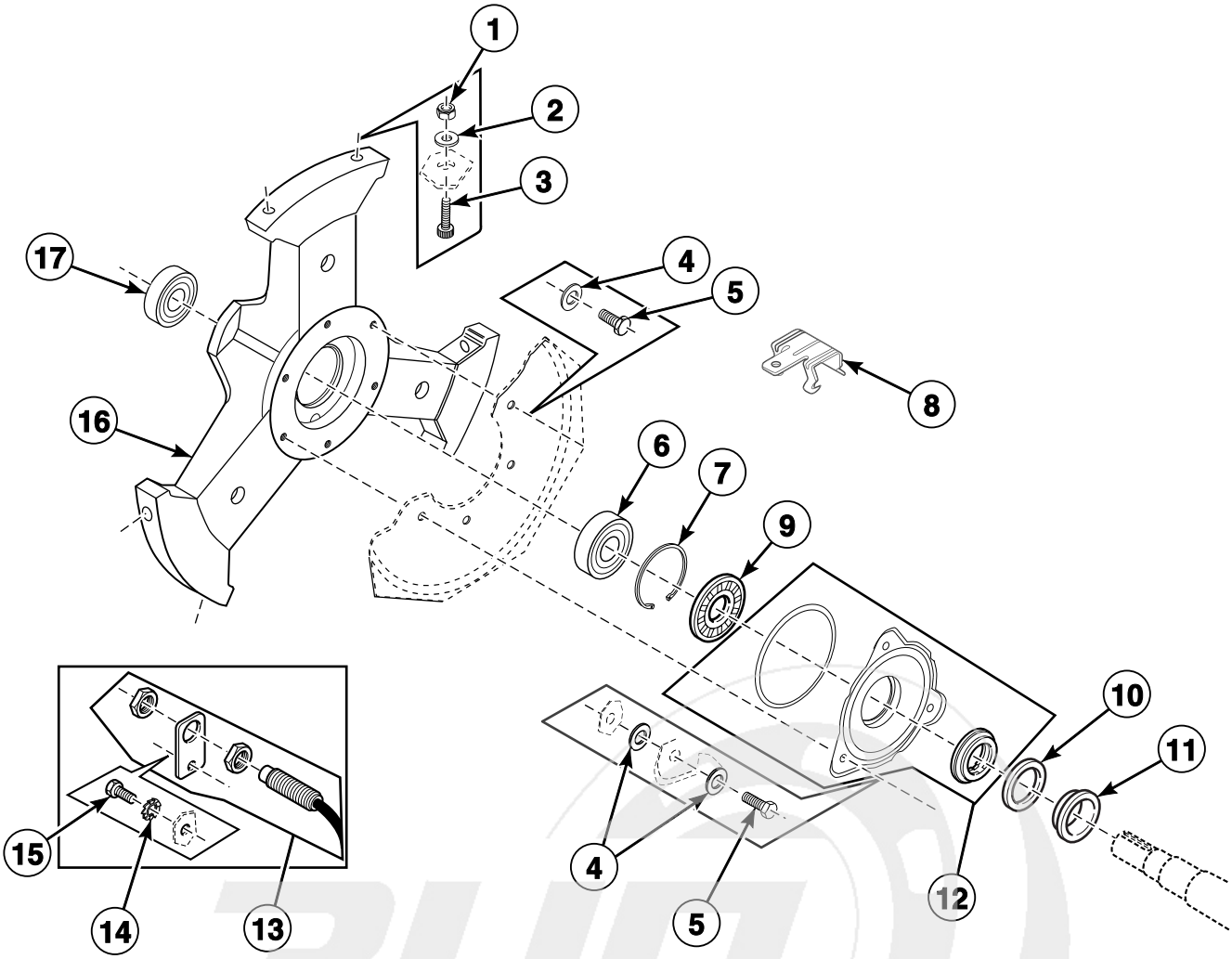

CFD650P_9001004

info@zipnasklade.ru
8(800)500-69-51

© Copyright, Alliance Laundry Systems LLC – DO NOT COPY or TRANSMIT

Bearing Assembly - Models Starting 1/31/11

REF	PART NO.	DESCRIPTION	COMMENTS
	380P4	Bearing Replacement Tool Kit	18 and 25 pound models
	381P3	Bearing Replacement Tool Kit	35 pound models
	3881P	Bearing Kit	18 and 25 pound models; Includes items 4-6, 9, 11, 12, 14 and 223/00242/10 Tub Front Gasket
	3882P	Bearing Kit	35 pound models; Includes items 4-6, 9, 11, 12, 14 and 223/00242/10 Tub Front Gasket
1	9001264	Nut	
2	9001218	Washer	
3	9001300	Screw	18 and 25 pound models
	9001303	Screw	35 pound models
4	9001225	Washer	
5	9001272	Bolt	
6	F100137P	Bearing	18 and 25 pound models
	9001438	Ball Bearing	35 pound models
7	9001453	Retainer Ring	18 and 25 pound models
	9001440	Retainer Ring	35 pound models
8	9001559	Caddy Bracket	4H58-4
	9001560	Caddy Bracket	4H912
9	B12332201	Lip Seal	18 and 25 pound models
	B12332301	Lip Seal	35 pound models
10	217/00100/00	Bearing Spacer	18 and 25 pound models
	9001980	Bearing Spacer	35 pound models
11	9001462	Counter Ring	18 and 25 pound models
	9001483	Counter Ring	35 pound models
12	B12333601	Seal Plate Assembly	18 pound models: 3 mm requires B12379701 Basket and Shaft Assembly; 9 mm requires B12379801 Basket and Shaft Assembly; 25 pound models: 3 mm requires B12379901 Basket and Shaft Assembly; 9 mm requires B12380001 Basket and Shaft Assembly
	B12333701	Seal Plate Assembly	35 pound models; 3 mm requires B12380501 Basket and Shaft Assembly; 9 mm requires B12380601 Basket and Shaft Assembly
13	210/00074/00	Speed Detector	
14	9001241	Washer	
15	9001274	Bolt	
16	152/10117/01	Bearing Housing Assembly	18 and 25 pound models; Includes items 6, 7 and 13
	152/10118/01	Bearing Housing Assembly	35 pound models; Includes items 6, 7 and 13
17	215/00001/13	Ball Bearing	18 and 25 pound models
	F100134	Bearing	35 pound models

info@zipnasklade.ru
8(800)500-69-51

© Copyright, Alliance Laundry Systems LLC – DO NOT COPY or TRANSMIT

Basket, Pulley and Belt (Drawing 1 of 2)

Models HX18PVQU6, HX18PVXU6, HX25PVQU6, HX25PVXU6, HX35PVQU6, HX35PVXU6, SX18PVQU6, SX18PVXU6, SX25PVQU6, SX25PVXU6, SX35PVQU6, SX35PVXU6, UX18PVNU6, UX18PVPU6, UX18PVQU6, UX18PVXU6, UX25PVNU6, UX25PVPU6, UX25PVQU6, UX25PVXU6, UX35PVNU6, UX35PVPU6, UX35PVQU6 and UX35PVXU6

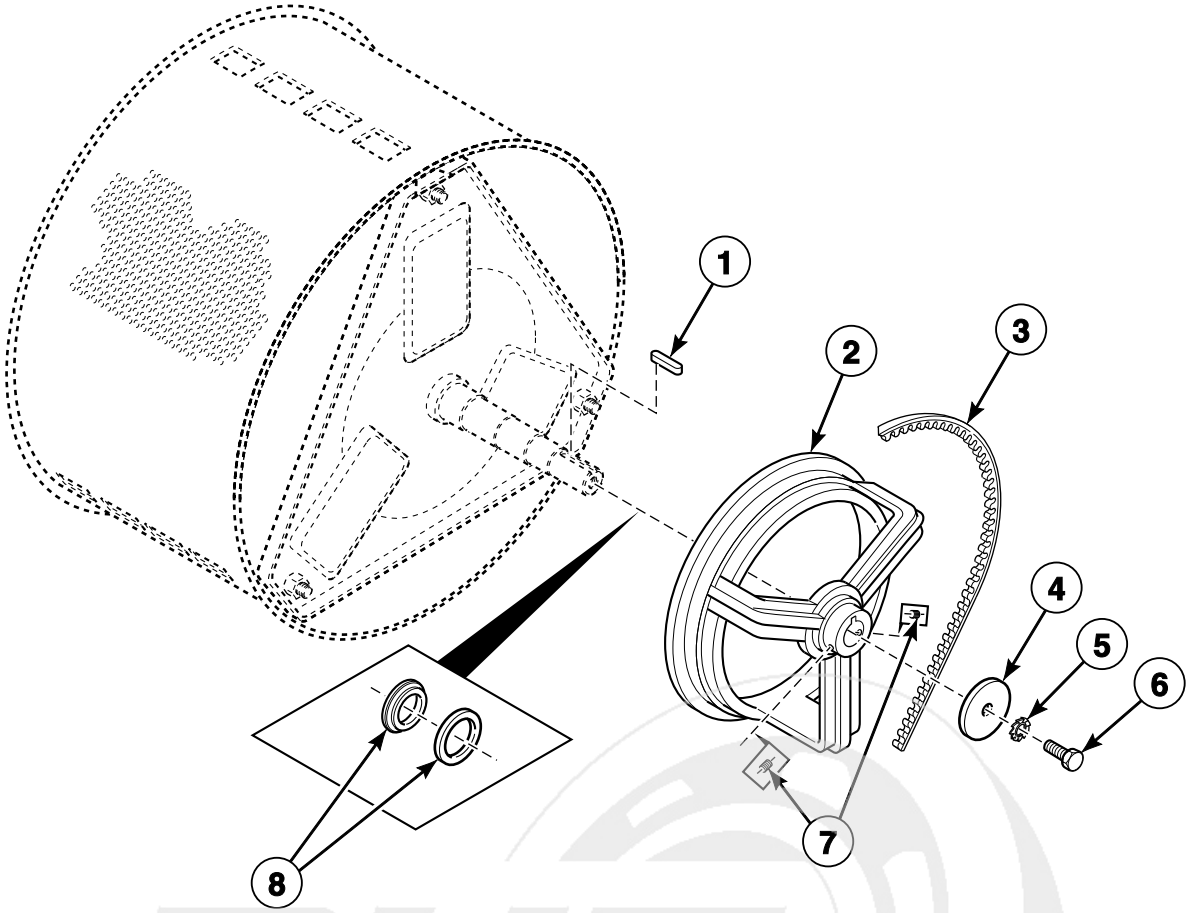

CFD5P_9001004

info@zipnasklade.ru
8(800)500-69-51

© Copyright, Alliance Laundry Systems LLC – DO NOT COPY or TRANSMIT

Basket, Pulley and Belt (Drawing 1 of 2)

REF	PART NO.	DESCRIPTION	COMMENTS
1	9001459	Cylinder Shaft Key	Models HX18PVQU6, HX18PVXU6, HX25PVQU6, HX25PVXU6, SX18PVQU6, SX18PVXU6, SX25PVQU6, SX25PVXU6, UX18PVNU6, UX18PVPU6, UX18PVQU6, UX18PVXU6, UX25PVNU6, UX25PVPU6, UX25PVQU6 and UX25PVXU6
	9001458	Cylinder Shaft Key	Models HX35PVQU6, HX35PVXU6, SX35PVQU6, SX35PVXU6, UX35PVNU6, UX35PVPU6, UX35PVQU6 and UX35PVXU6
2	9001567	Pulley	Models HX18PVQU6, HX18PVXU6, HX25PVQU6, HX25PVXU6, SX18PVQU6, SX18PVXU6, SX25PVQU6, SX25PVXU6, UX18PVNU6, UX18PVPU6, UX18PVQU6, UX18PVXU6, UX25PVNU6, UX25PVPU6, UX25PVQU6 and UX25PVXU6
	9001566	Pulley	Models HX35PVQU6, HX35PVXU6, SX35PVQU6, SX35PVXU6, UX35PVNU6, UX35PVPU6, UX35PVQU6 and UX35PVXU6
3	9001572	V-Belt	Models HX18PVQU6, HX18PVXU6, HX25PVQU6, HX25PVXU6, SX18PVQU6, SX18PVXU6, SX25PVQU6, SX25PVXU6, UX18PVNU6, UX18PVPU6, UX18PVQU6, UX18PVXU6, UX25PVNU6, UX25PVPU6, UX25PVQU6 and UX25PVXU6
	9001573	V-Belt	Models HX35PVQU6, HX35PVXU6, SX35PVQU6, SX35PVXU6, UX35PVNU6, UX35PVPU6, UX35PVQU6 and UX35PVXU6; 2 required
4	9001210	Washer	Models HX18PVQU6, HX18PVXU6, HX25PVQU6, HX25PVXU6, SX18PVQU6, SX18PVXU6, SX25PVQU6, SX25PVXU6, UX18PVNU6, UX18PVPU6, UX18PVQU6, UX18PVXU6, UX25PVNU6, UX25PVPU6, UX25PVQU6 and UX25PVXU6
	9001217	Washer	Models HX35PVQU6, HX35PVXU6, SX35PVQU6, SX35PVXU6, UX35PVNU6, UX35PVPU6, UX35PVQU6 and UX35PVXU6
5	9001238	Washer	
6	9001284	Bolt	Models HX18PVQU6, HX18PVXU6, HX25PVQU6, HX25PVXU6, SX18PVQU6, SX18PVXU6, SX25PVQU6, SX25PVXU6, UX18PVNU6, UX18PVPU6, UX18PVQU6, UX18PVXU6, UX25PVNU6, UX25PVPU6, UX25PVQU6 and UX25PVXU6
	9001283	Bolt	Models HX35PVQU6, HX35PVXU6, SX35PVQU6, SX35PVXU6, UX35PVNU6, UX35PVPU6, UX35PVQU6 and UX35PVXU6
7	9001302	Screw	
8	9001462	Counter Ring	Models HX18PVQU6, HX18PVXU6, HX25PVQU6, HX25PVXU6, SX18PVQU6, SX18PVXU6, SX25PVQU6, SX25PVXU6, UX18PVNU6, UX18PVPU6, UX18PVQU6, UX18PVXU6, UX25PVNU6, UX25PVPU6, UX25PVQU6 and UX25PVXU6
	9001483	Counter Ring	Models HX35PVQU6, HX35PVXU6, SX35PVQU6, SX35PVXU6, UX35PVNU6, UX35PVPU6, UX35PVQU6 and UX35PVXU6

info@zipnasklade.ru
8(800)500-69-51

© Copyright, Alliance Laundry Systems LLC – DO NOT COPY or TRANSMIT

Basket, Pulley and Belt (Drawing 2 of 2)

All Models Except HX18PVQU6, HX18PVXU6, HX25PVQU6, HX25PVXU6, HX35PVQU6, HX35PVXU6, SX18PVQU6, SX18PVXU6, SX25PVQU6, SX25PVXU6, SX35PVQU6, SX35PVXU6, UX18PVNU6, UX18PVPU6, UX18PVQU6, UX18PVXU6, UX25PVNU6, UX25PVPU6, UX25PVQU6, UX25PVXU6, UX35PVNU6, UX35PVPU6, UX35PVQU6 and UX35PVXU6

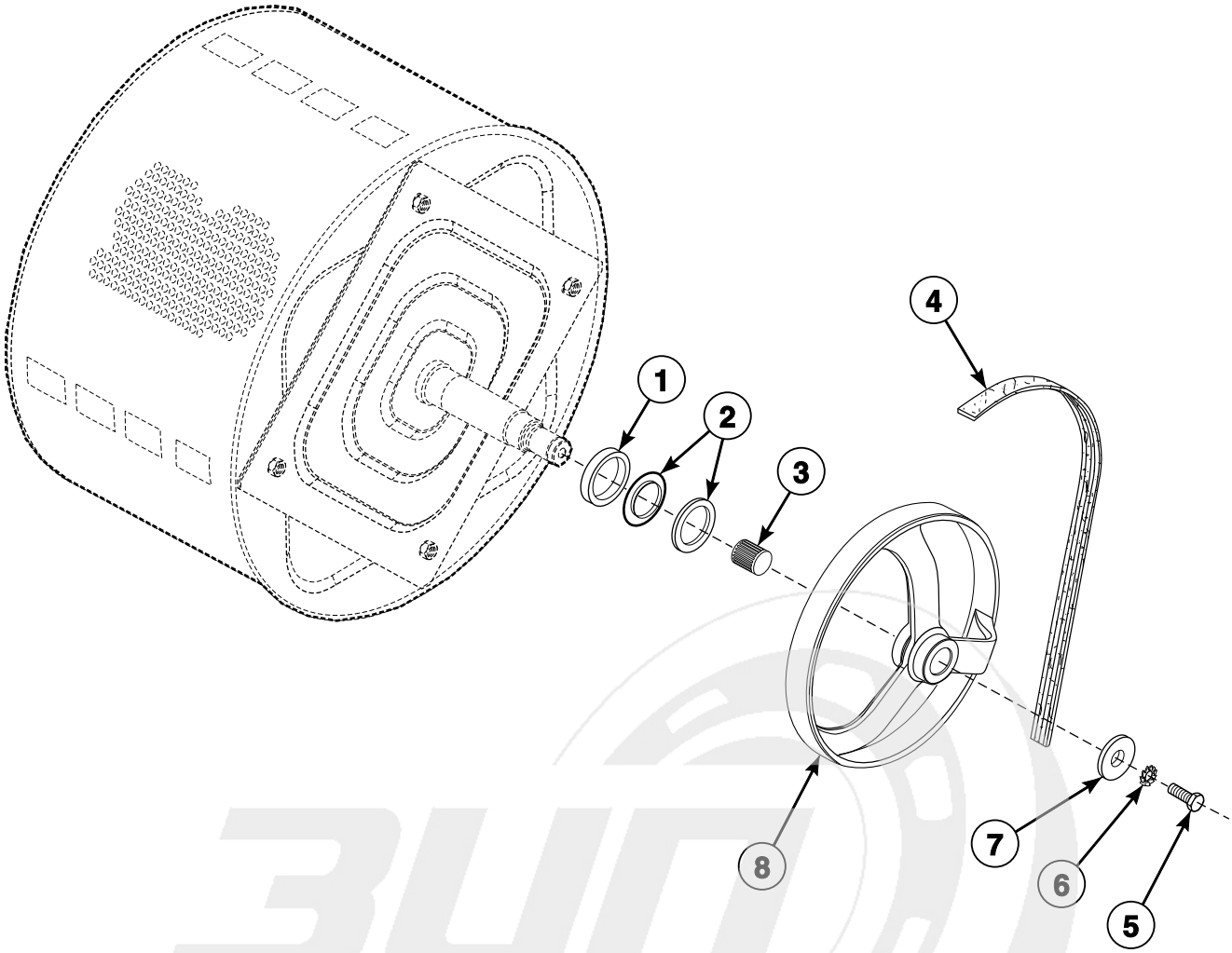

CFD143P_9001004

info@zipnasklade.ru
8(800)500-69-51

© Copyright, Alliance Laundry Systems LLC – DO NOT COPY or TRANSMIT

Basket, Pulley and Belt (Drawing 2 of 2)

REF	PART NO.	DESCRIPTION	COMMENTS
1	9001980	Bearing Spacer	35 pound models
	217/00100/00	Bearing Spacer	18 and 25 pound models
2	9001483	Counter Ring	35 pound models
	9001462	Counter Ring	18 and 25 pound models
3	9001928	Tolerance Ring	
4	9001981	Belt	35 pound models
	9001929	Belt	18 and 25 pound models
5	9001285	Bolt	
6	9001239	Washer	
7	9001220	Washer	
8	9001930	Pulley	

info@zipnasklade.ru
8(800)500-69-51

© Copyright, Alliance Laundry Systems LLC – DO NOT COPY or TRANSMIT

Motor (Drawing 1 of 3)

Models HX18PVQU6, HX18PVXU6, HX25PVQU6, HX25PVXU6, SX18PVQU6, SX18PVXU6, SX25PVQU6, SX25PVXU6, UX18PVNU6, UX18PVPU6, UX18PVQU6, UX18PVXU6, UX25PVNU6, UX25PVPU6, UX25PVQU6 and UX25PVXU6

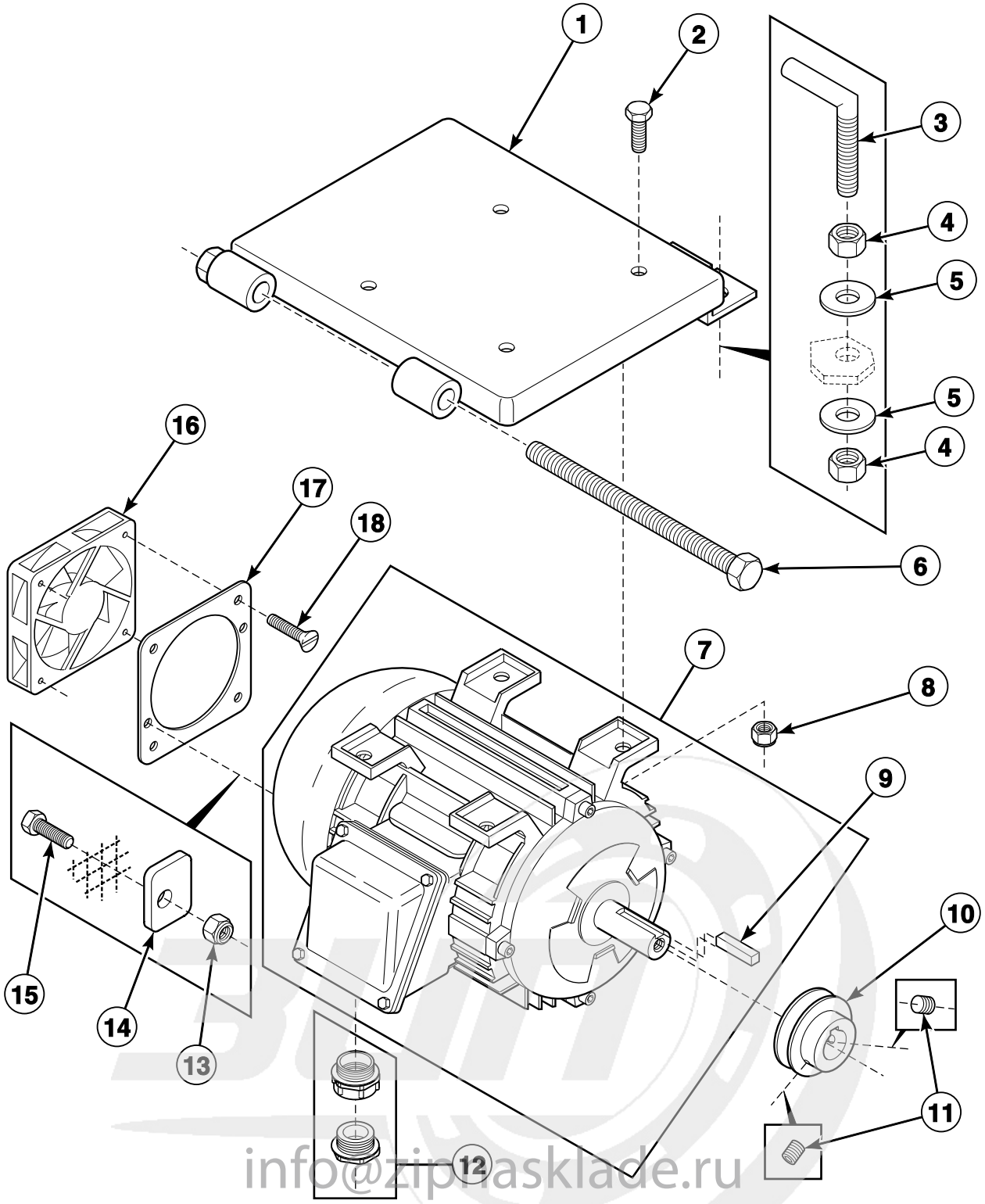

info@zipnasklade.ru
8(800)500-69-51

© Copyright, Alliance Laundry Systems LLC – DO NOT COPY or TRANSMIT

Motor (Drawing 1 of 3)

REF	PART NO.	DESCRIPTION	COMMENTS
1	9001154	Motor Plate	
2	9001285	Bolt	
3	9001098	Belt Adjusting Rod	
4	9001255	Nut	
5	9001208	Washer	
6	9001316	Bolt	
7	B12510501	Motor	
8	9001263	Nut	
9	227/00126/01	Motor Key	
10	9001571	Pulley	
11	9001302	Screw	
12	9001432	Cordlock	
13	9001268	Nut	
14	N/A	Bearing Retainer Ring	
15	9001301	Bolt	
16	9001382	Motor and Inverter Fan	
17	N/A	Fan Plate Assembly	
18	9001336	Screw	

N/A = Part no longer available

info@zipnasklade.ru
8(800)500-69-51

© Copyright, Alliance Laundry Systems LLC – DO NOT COPY or TRANSMIT

Motor (Drawing 2 of 3)

Models HX35PVQU6, HX35PVXU6, SX35PVQU6, SX35PVXU6, UX35PVNU6, UX35PVPU6, UX35PVQU6 and UX35PVXU6

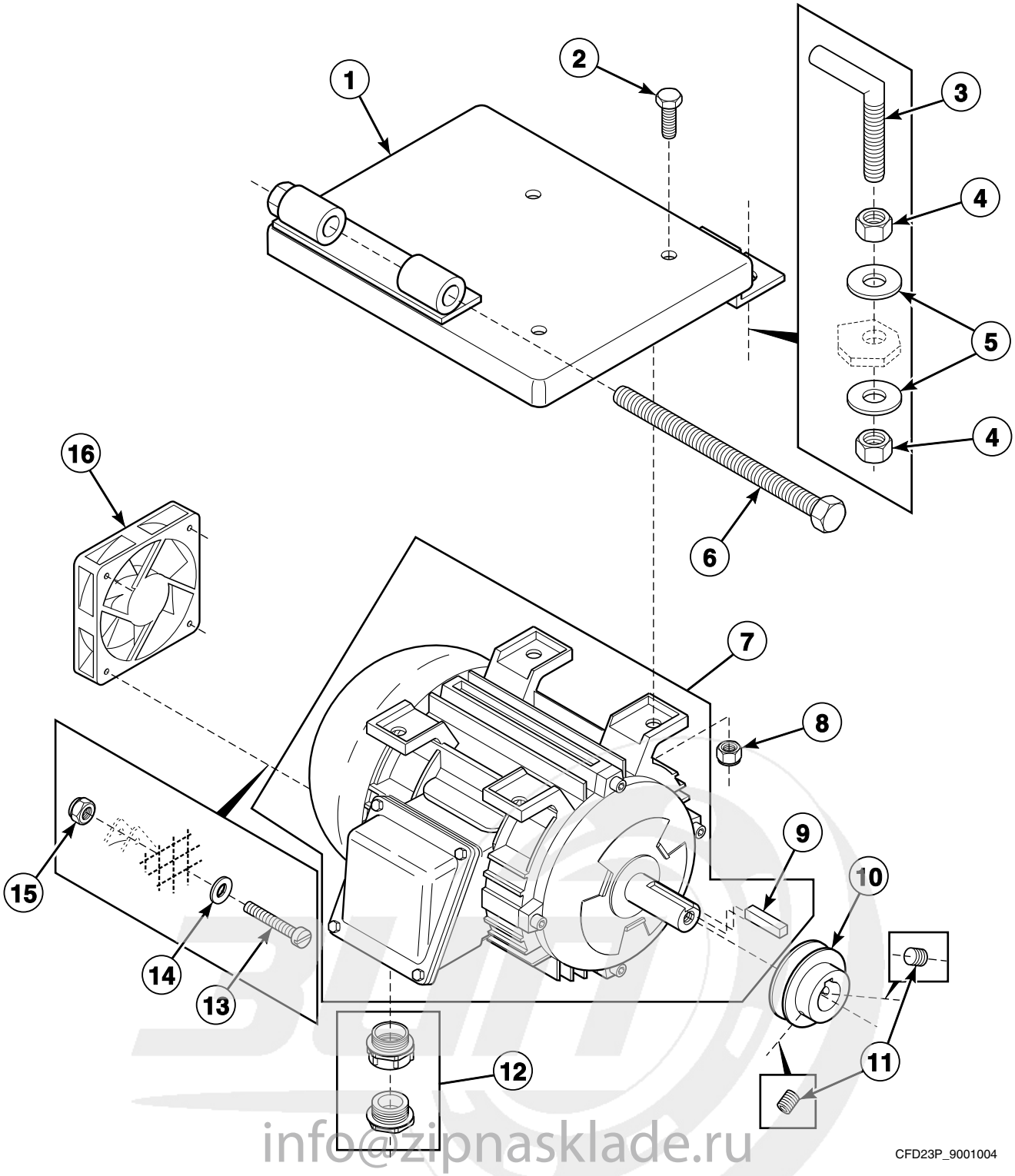

info@zipnasklade.ru
8(800)500-69-51

© Copyright, Alliance Laundry Systems LLC – DO NOT COPY or TRANSMIT

Motor (Drawing 2 of 3)

REF	PART NO.	DESCRIPTION	COMMENTS
1	9001154	Motor Plate	
2	9001285	Bolt	
3	9001098	Belt Adjusting Rod	
4	9001255	Nut	
5	9001208	Washer	
6	9001316	Bolt	
7	B12510601	Motor	Includes key
8	9001263	Nut	
9	227/00127/01	Motor Key	
10	9001565	Pulley	
11	9001302	Screw	
12	9001427	Cordlock	
13	9001327	Screw	
14	9001215	Washer	
15	9001267	Nut	
16	9001382	Motor and Inverter Fan	Includes 9002031 Fan Harness

info@zipnasklade.ru
8(800)500-69-51

© Copyright, Alliance Laundry Systems LLC – DO NOT COPY or TRANSMIT

Motor (Drawing 3 of 3)

All Models Except HX18PVQU6, HX18PVXU6, HX25PVQU6, HX25PVXU6, HX35PVQU6, HX35PVXU6, SX18PVQU6, SX18PVXU6, SX25PVQU6, SX25PVXU6, SX35PVQU6, SX35PVXU6, UX18PVNU6, UX18PVPU6, UX18PVQU6, UX18PVXU6, UX25PVNU6, UX25PVPU6, UX25PVQU6, UX25PVXU6, UX35PVNU6, UX35PVPU6, UX35PVQU6 and UX35PVXU6

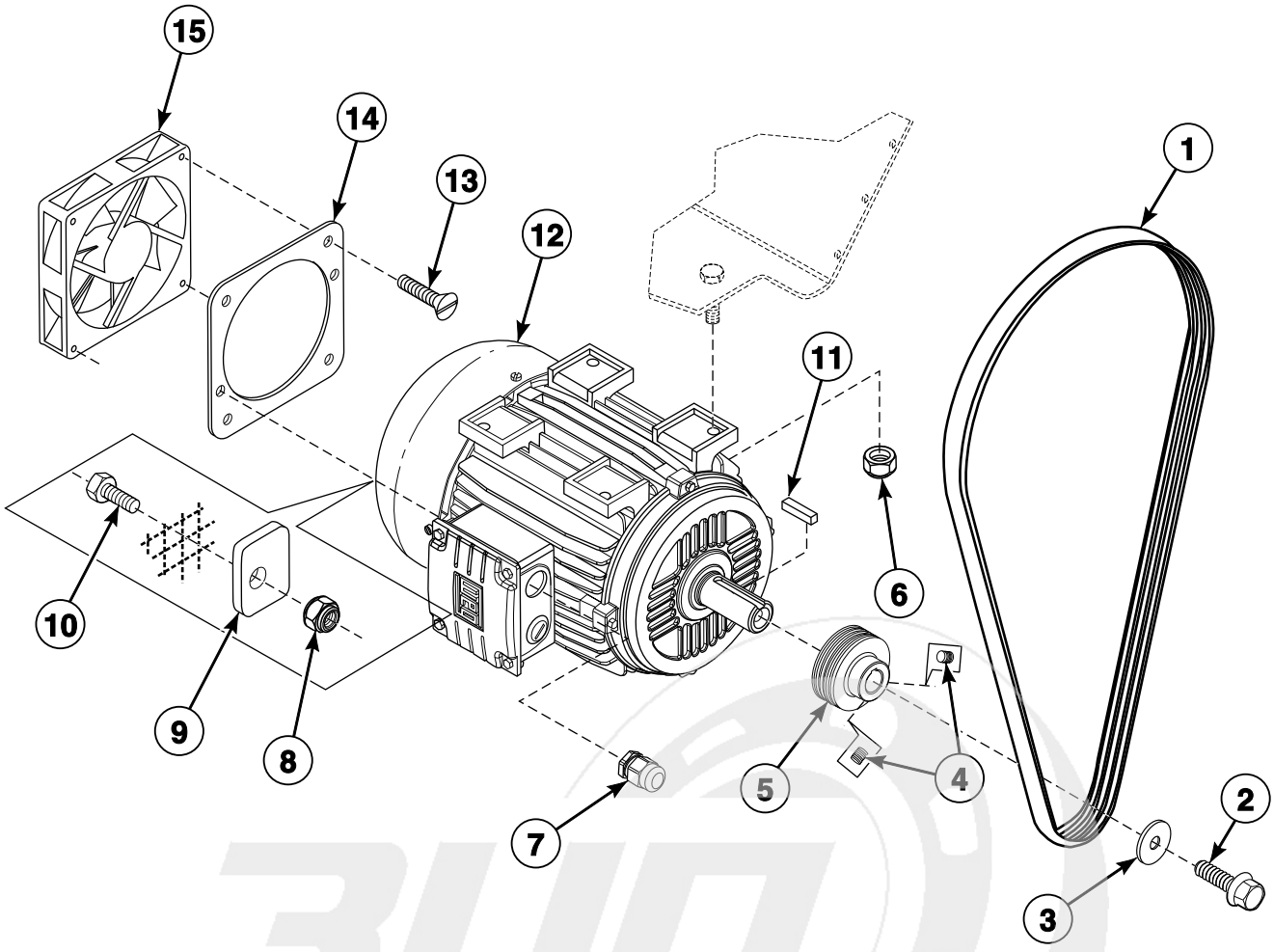

CFD144P_9001004

info@zipnasklade.ru
8(800)500-69-51

© Copyright, Alliance Laundry Systems LLC – DO NOT COPY or TRANSMIT

Motor (Drawing 3 of 3)

REF	PART NO.	DESCRIPTION	COMMENTS
1	9001981	Belt	35 pound models
	9001929	Belt	18 and 25 pound models
2	9001310	Bolt	
3	9001213	Washer	
4	9001302	Screw	
5	9001982	Motor Pulley	35 pound models
	9001931	Motor Pulley	18 and 25 pound models
6	9001262	Nut	
7	9001434	Cordlock	35 pound models
	9001433	Cordlock	18 and 25 pound models
8	9001268	Nut	
9	N/A	Bearing Retainer Ring	
10	9001301	Bolt	
11	227/00127/01	Motor Key	35 pound models
	227/00126/01	Motor Key	18 and 25 pound models
12	B12510601	Motor	35 pound models
	B12510501	Motor	18 and 25 pound models
	227/00227/00	Inverter	
13	9001336	Screw	
14	N/A	Fan Plate Assembly	
15	9001382	Motor and Inverter Fan	Includes 9002031 Fan Harness

N/A = Part no longer available

info@zipnasklade.ru
8(800)500-69-51

© Copyright, Alliance Laundry Systems LLC – DO NOT COPY or TRANSMIT

Single Drain Assembly (Drawing 1 of 4)

Models HX18PVQU6, HX18PVXU6, HX25PVQU6, HX25PVXU6, SX18PVQU6, SX18PVXU6, SX25PVQU6, SX25PVXU6, UX18PVNU6, UX18PVPU6, UX18PVQU6, UX18PVXU6, UX25PVNU6, UX25PVPU6, UX25PVQU6 and UX25PVXU6

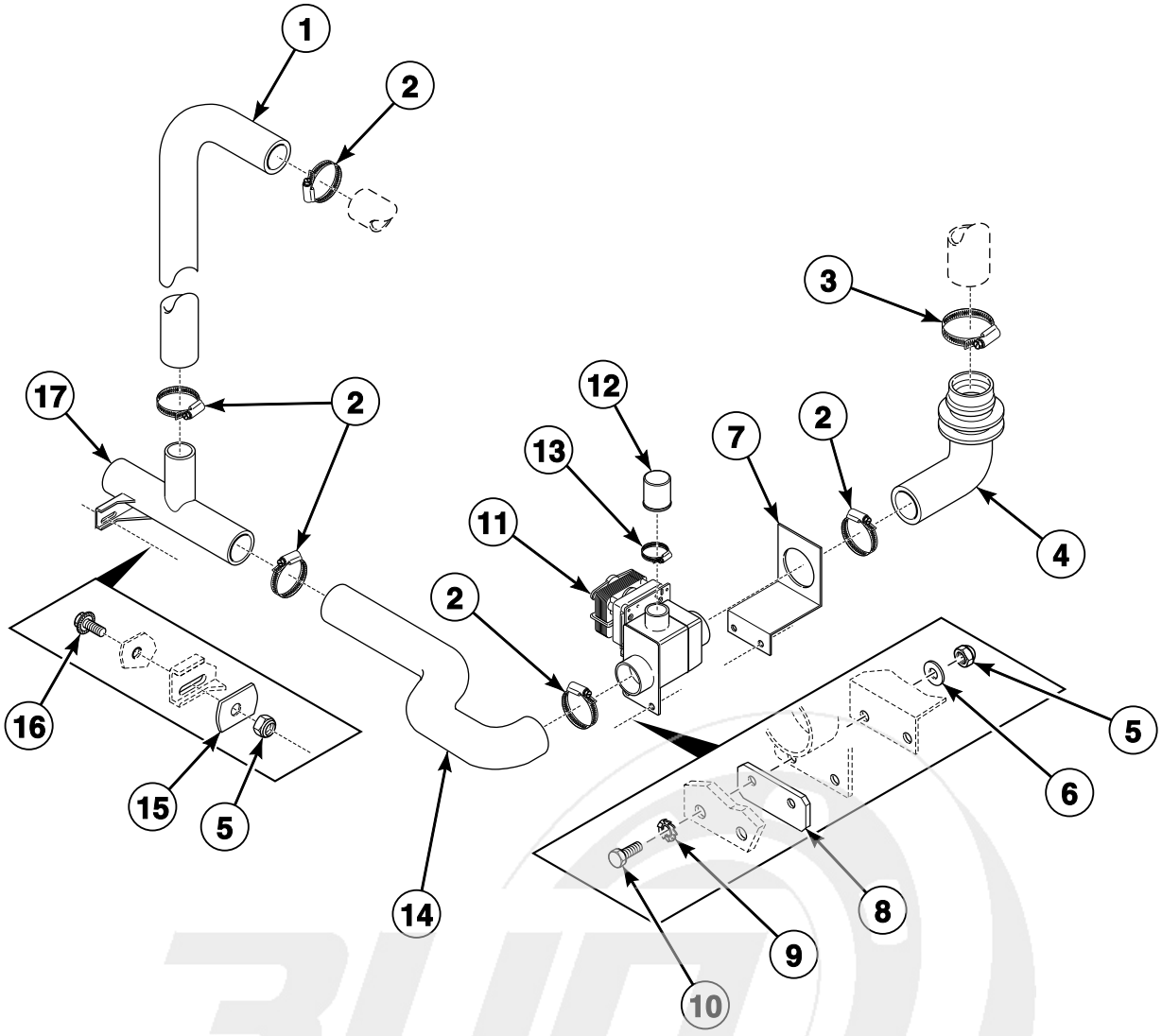

CFD7P_9001004

info@zipnasklade.ru
8(800)500-69-51

© Copyright, Alliance Laundry Systems LLC – DO NOT COPY or TRANSMIT

Single Drain Assembly (Drawing 1 of 4)

REF	PART NO.	DESCRIPTION	COMMENTS
	900/00116/00	Drain Valve Harness	
1	9001527	Overflow Hose	
2	9001494	Hose Clamp	
3	9001495	Hose Clamp	
4	9001534	Drain Valve Hose	
5	9001254	Nut	
6	9001214	Washer	
7	N/A	Drain Valve Plate Assembly	
8	N/A	Drain Valve Plate	
9	9001241	Washer	
10	9001308	Screw	
11	9001353	Drain Valve	
12	9001503	Drain Valve Overflow Plug	
13	9001493	Hose Clamp	
14	9001535	Drain Valve Vent Hose	
15	9001037	Outlet Pipe Plate Assembly	
16	9001310	Bolt	
17	9001547	Drain Pipe	

N/A = Part no longer available

info@zipnasklade.ru
8(800)500-69-51

© Copyright, Alliance Laundry Systems LLC – DO NOT COPY or TRANSMIT

Single Drain Assembly (Drawing 2 of 4)

Models HX35PVQU6, HX35PVXU6, SX35PVQU6, SX35PVXU6, UX35PVNU6, UX35PVPU6, UX35PVQU6 and UX35PVXU6

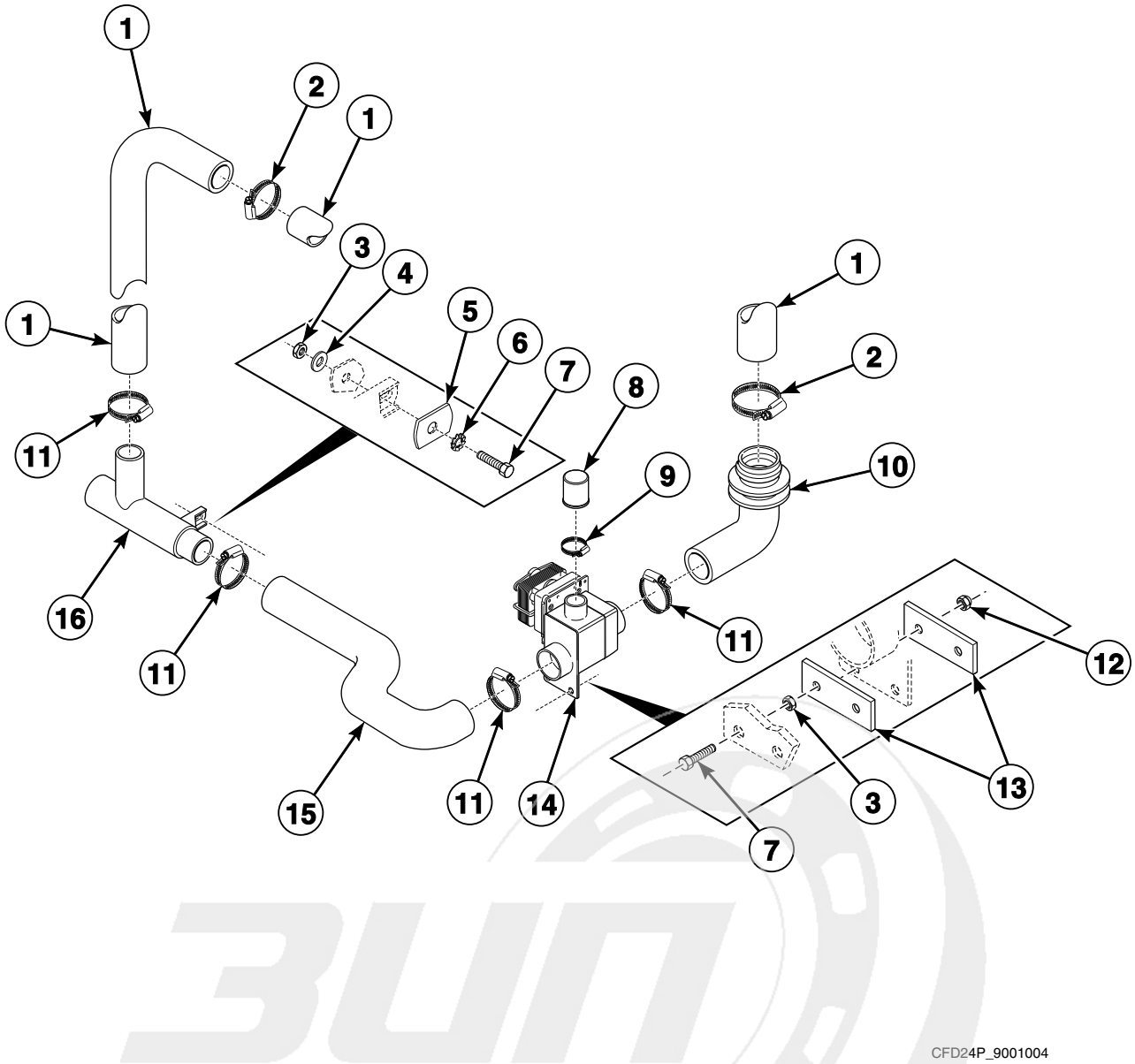

info@zipnasklade.ru
8(800)500-69-51

© Copyright, Alliance Laundry Systems LLC – DO NOT COPY or TRANSMIT

Single Drain Assembly (Drawing 2 of 4)

REF	PART NO.	DESCRIPTION	COMMENTS
	900/00116/00	Drain Valve Harness	
1	9001504	Overflow Hose	
2	9001495	Hose Clamp	
3	9001250	Nut	
4	9001214	Washer	
5	9001037	Outlet Pipe Plate Assembly	
6	9001241	Washer	
7	9001295	Bolt	
8	9001503	Drain Valve Overflow Plug	
9	9001493	Hose Clamp	
10	9001534	Drain Valve Hose	
11	9001494	Hose Clamp	
12	9001254	Nut	
13	N/A	Drain Valve Plate	
14	9001353	Drain Valve	
15	9001535	Drain Valve Vent Hose	
16	9001517	Drain Pipe	

N/A = Part no longer available

info@zipnasklade.ru
8(800)500-69-51

© Copyright, Alliance Laundry Systems LLC – DO NOT COPY or TRANSMIT

Single Drain Assembly (Drawing 3 of 4)

18, 25 and 35 Pound Models with an A or M in the 8th or 9th Position of the Model Number
Models Through 2/18/07 and Starting Again 8/12/10

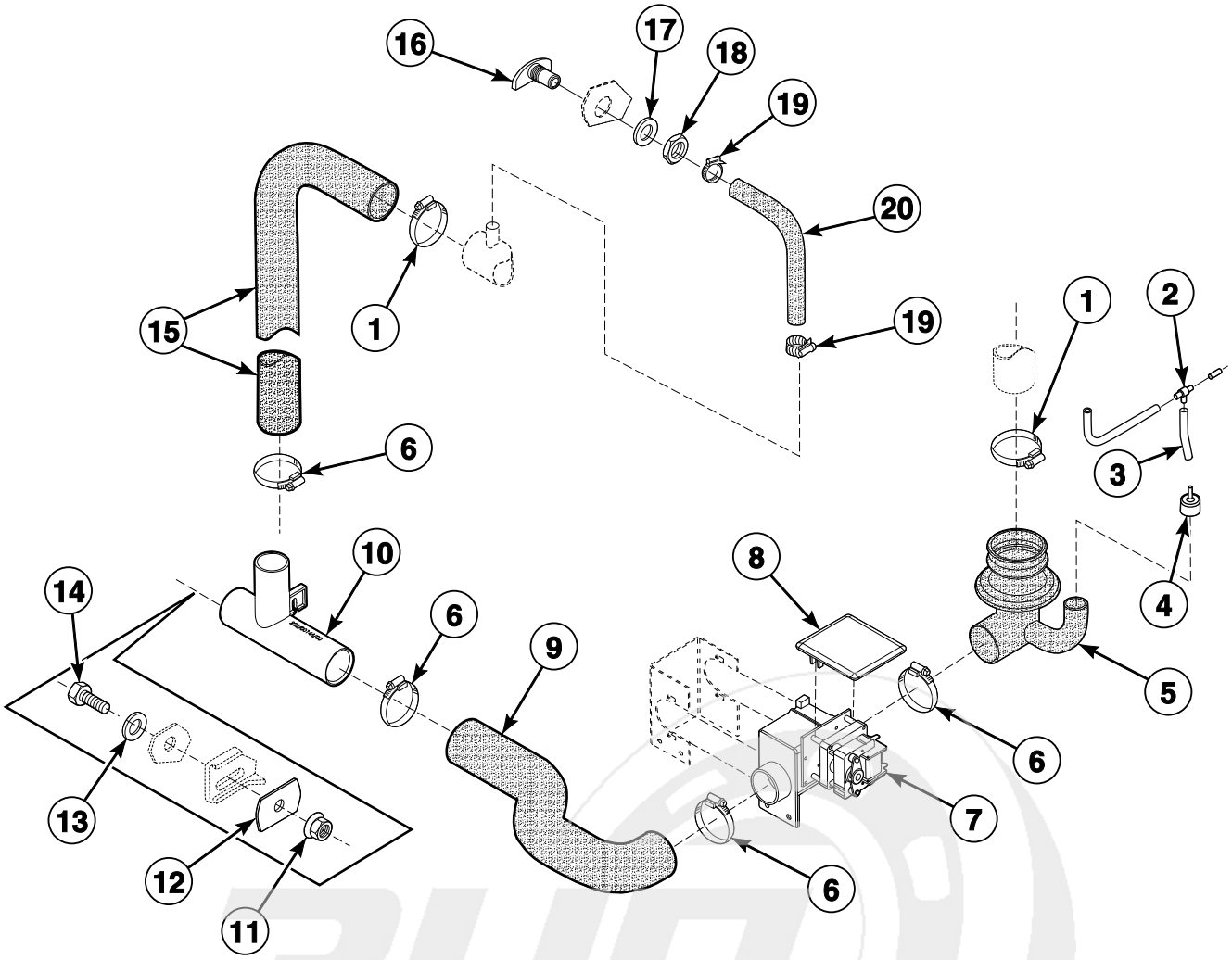

CFD180P_9001004

info@zipnasklade.ru
8(800)500-69-51

© Copyright, Alliance Laundry Systems LLC – DO NOT COPY or TRANSMIT

Single Drain Assembly (Drawing 3 of 4)

REF	PART NO.	DESCRIPTION	COMMENTS
	900/00116/00	Drain Valve Harness	
1	9001495	Hose Clamp	
2	223/00173/10	Pressure Switch Hose Tee	
3	223/00333/00	Pressure Hose	
4	9001932	Pressure Switch Cap	
5	9001933	Tub to Drain Valve Hose	
6	9001494	Hose Clamp	
7	9001934	Drain Valve	
8	N/A	Drain Valve Cover	
9	9001535	Drain Valve Vent Hose	
10	9001945	Drain Pipe	
11	9001311	Nut	
12	9001037	Outlet Pipe Plate Assembly	
13	9001214	Washer	
14	9001295	Bolt	
15	9001527	Overflow Hose	Models HX018PVQM7, HX018PVXM7, HX025PVQM7, HX025PVXM7, HX18PVQM6, HX18PVQM7, HX18PVXM6, HX18PVXM7, HX25PVQM6, HX25PVQM7, HX25PVXM6, HX25PVXM7, SX018PVPA7, SX018PVQM7, SX018PVXM7, SX025PVQM7, SX025PVXM7, SX18PVPA7, SX18PVQM6, SX18PVQM7, SX18PVXM6, SX18PVXM7, SX25PVQM6, SX25PVQM7, SX25PVXM6, SX25PVXM7, UX018PVNA7, UX018PVPA7, UX018PVQA7, UX018PVQM7, UX018PVXA7, UX018PVXM7, UX025PVNA7, UX025PVPA7, UX025PVQA7, UX025PVQM7, UX025PVXA7, UX025PVXM7, UX18PVNA6, UX18PVNA7, UX18PVPA6, UX18PVPA7, UX18PVQA6, UX18PVQA7, UX18PVQM6, UX18PVQM7, UX18PVXA6, UX18PVXA7, UX18PVXM6, UX18PVXM7, UX25PVNA6, UX25PVNA7, UX25PVPA6, UX25PVPA7, UX25PVQA6, UX25PVQA7, UX25PVQM6, UX25PVQM7, UX25PVXA6, UX25PVXA7, UX25PVXM6 and UX25PVXM7
	9001983	Overflow Hose	Models HX035PVQM7, HX035PVXM7, HX35PVQM6, HX35PVQM7, HX35PVXM6, HX35PVXM7, SX035PVNM7, SX035PVQM7, SX035PVXM7, SX35PVNM7, SX35PVQM6, SX35PVQM7, SX35PVXM6, SX35PVXM7, UX035PVNA7, UX035PVPA7, UX035PVQA7, UX035PVQM7, UX035PVXA7, UX035PVXM7, UX35PVNA6, UX35PVNA7, UX35PVPA6, UX35PVPA7, UX35PVQA6, UX35PVQA7, UX35PVQM6, UX35PVQM7, UX35PVXA6, UX35PVXA7, UX35PVXM6 and UX35PVXM7
16	9001487	Prewash and Mainwash Nozzle	
17	9001209	Washer	
18	9001270	Nut	
19	F200205	Hose Clamp	No. 10
20	9001499	Water Hose	

N/A = Part no longer available

info@zipnasklade.ru
8(800)500-69-51

© Copyright, Alliance Laundry Systems LLC – DO NOT COPY or TRANSMIT

Single Drain Assembly (Drawing 4 of 4)

18, 25 and 35 Pound Models with an A or M in the 8th Position of the Model Number
Models Starting 2/19/07 Through 8/11/10

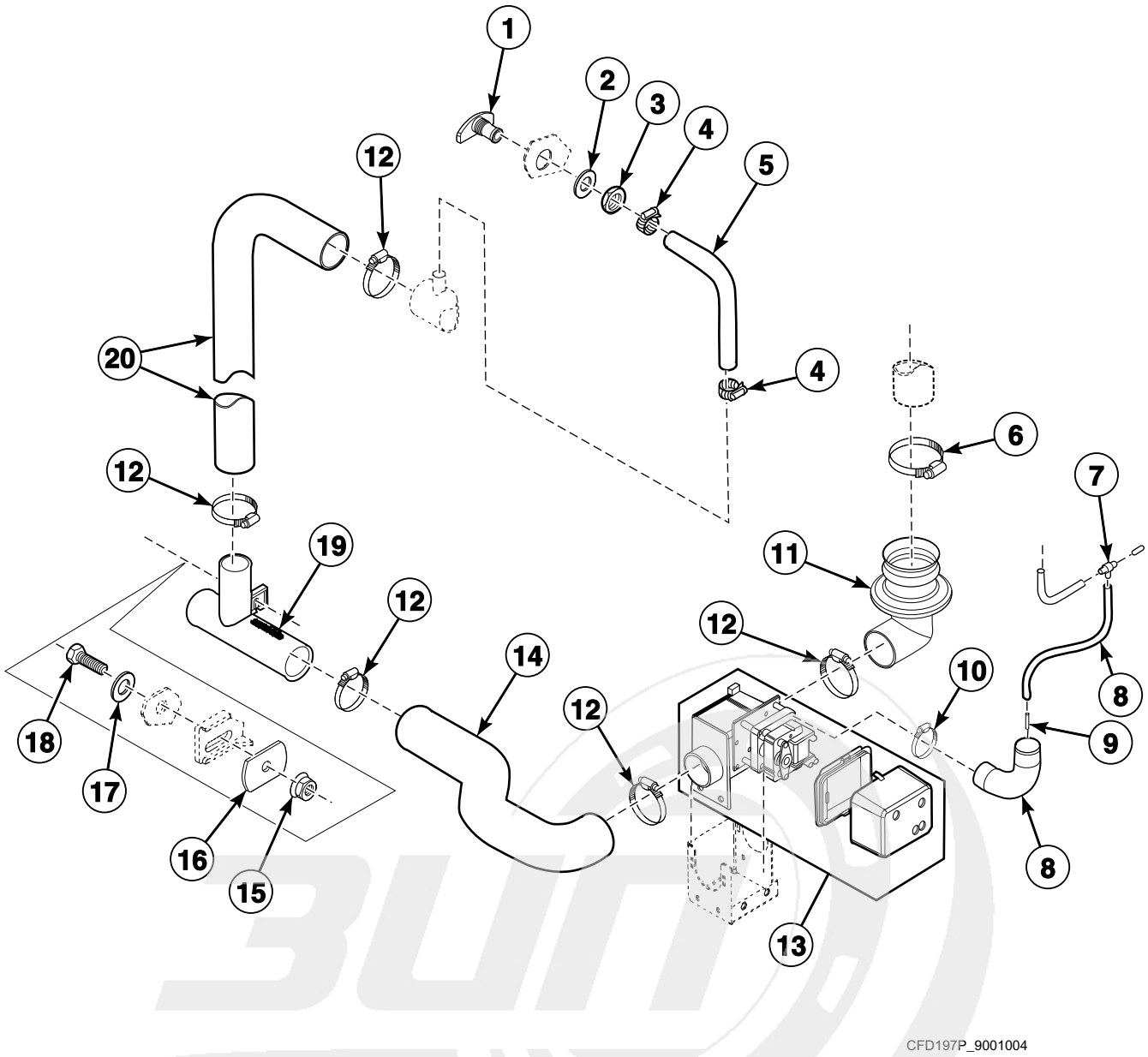

info@zipnasklade.ru
8(800)500-69-51

© Copyright, Alliance Laundry Systems LLC – DO NOT COPY or TRANSMIT

Single Drain Assembly (Drawing 4 of 4)

REF	PART NO.	DESCRIPTION	COMMENTS
	900/00116/00	Drain Valve Harness	
1	9001487	Prewash and Mainwash Nozzle	
2	9001209	Washer	
3	9001270	Nut	
4	F200205	Hose Clamp	No. 10
5	9001498	Water Hose	Sold per meter
6	9001495	Hose Clamp	
7	223/00173/10	Pressure Switch Hose Tee	
8	9001542	Pressure Switch Elbow	Models HX18PVQM6, HX18PVQM7, HX18PVXM6, HX18PVXM7, HX35PVQM6, HX35PVQM7, HX35PVXM6, HX35PVXM7, SX18PVQM6, SX18PVQM7, SX18PVXM6, SX18PVXM7, SX35PVQM6, SX35PVQM7, SX35PVXM6, SX35PVXM7, UX18PVNA6, UX18PVNA7, UX18PVPA6, UX18PVPA7, UX18PVQA6, UX18PVQA7, UX18PVQM6, UX18PVQM7, UX18PVXA6, UX18PVXA7, UX18PVXM6, UX18PVXM7, UX35PVNA6, UX35PVNA7, UX35PVPA6, UX35PVPA7, UX35PVQA6, UX35PVQA7, UX35PVQM6, UX35PVQM7, UX35PVXA6, UX35PVXA7, UX35PVXM6 and UX35PVXM7
	223/00333/00	Pressure Hose	Models HX25PVQM6, HX25PVQM7, HX25PVXM6, HX25PVXM7, SX25PVQM6, SX25PVQM7, SX25PVXM6, SX25PVXM7, UX25PVNA6, UX25PVNA7, UX25PVPA6, UX25PVPA7, UX25PVQA6, UX25PVQA7, UX25PVQM6, UX25PVQM7, UX25PVXA6, UX25PVXA7, UX25PVXM6 and UX25PVXM7
9	9001496	Hose Barb	
10	9001492	Hose Clamp	
11	9002085	Tub to Drain Valve Hose	
12	9001494	Hose Clamp	
13	9002083	Drain Valve	
14	9002097	Drain Valve to Pipe Hose	
15	9001311	Nut	
16	9001037	Outlet Pipe Plate Assembly	
17	9001214	Washer	
18	9001295	Bolt	
19	9001945	Drain Pipe	
20	9001527	Overflow Hose	

info@zipnasklade.ru
8(800)500-69-51

© Copyright, Alliance Laundry Systems LLC – DO NOT COPY or TRANSMIT

Dual Drain Assembly

Models HX035PVQM7, HX035PVXM7, HX35PVQM6, HX35PVQM7, HX35PVQU6, HX35PVXM6, HX35PVXM7, HX35PVXU6, SX035PVNM7, SX035PVQM7, SX035PVXM7, SX35PVNM7, SX35PVQM6, SX35PVQM7, SX35PVQU6, SX35PVXM6, SX35PVXM7, SX35PVXU6, UX035PVNA7, UX035PVPA7, UX035PVQA7, UX035PVQM7, UX035PVXA7, UX035PVXM7, UX35PVNA6, UX35PVNA7, UX35PVNU6, UX35PVPA6, UX35PVPA7, UX35PVPU6, UX35PVQA6, UX35PVQA7, UX35PVQM6, UX35PVQM7, UX35PVQU6, UX35PVXA6, UX35PVXA7, UX35PVXM6, UX35PVXM7 and UX35PVXU6

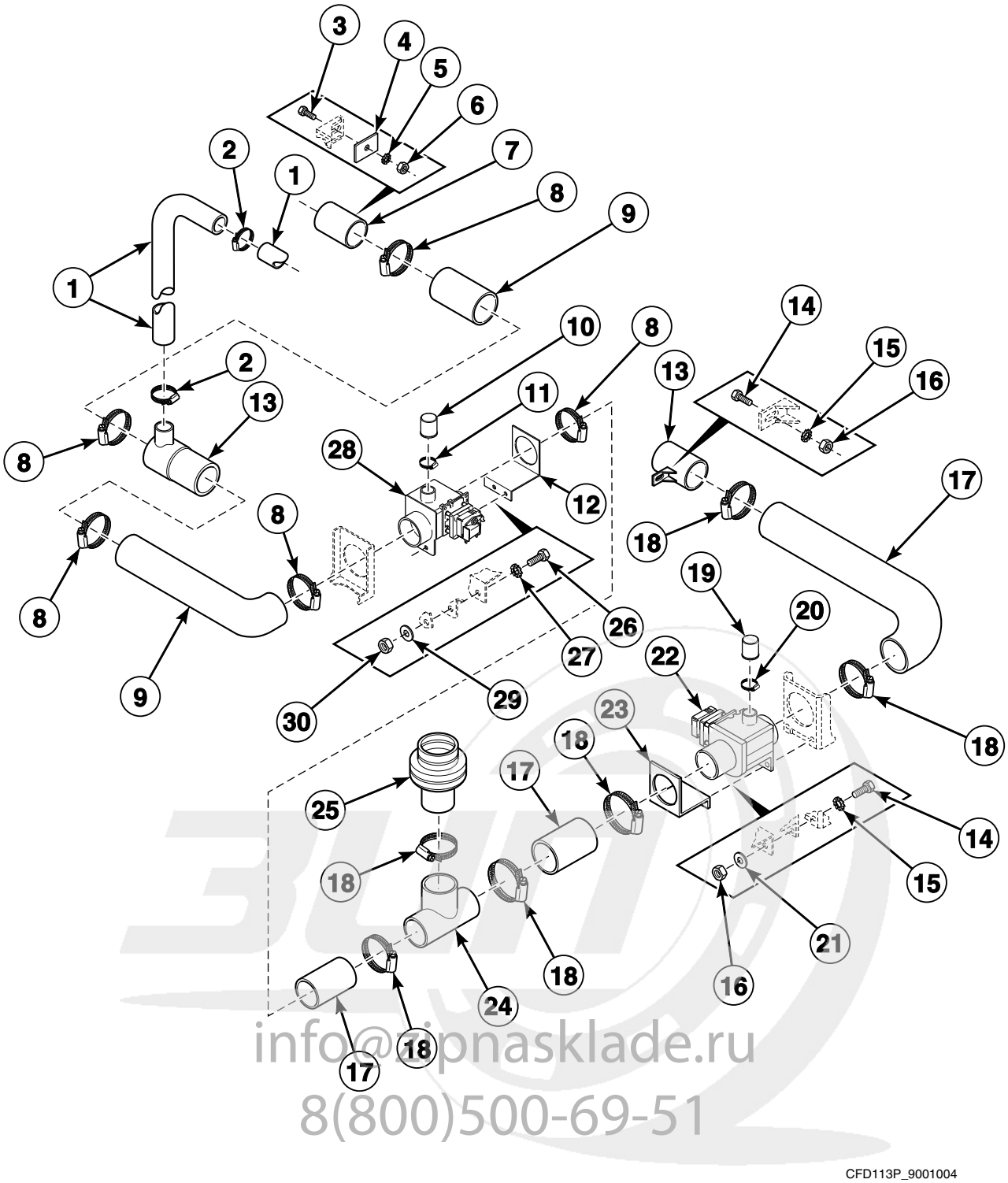

info@zipnasklade.ru
8(800)500-69-51

CFD113P_9001004

© Copyright, Alliance Laundry Systems LLC – DO NOT COPY or TRANSMIT

Dual Drain Assembly

REF	PART NO.	DESCRIPTION	COMMENTS
	900/00116/00	Drain Valve Harness	
1	223/00131/00	Overflow Hose	
2	9001494	Hose Clamp	
3	9001273	Bolt	
4	9001037	Outlet Pipe Plate Assembly	
5	9001241	Washer	
6	9001260	Nut	
7	9001518	Drain Pipe	
8	9001502	Hose Clamp	
9	9001526	Drain Valve to Drain Pipe Hose	
10	9001503	Drain Valve Overflow Plug	
11	9001493	Hose Clamp	
12	9001099	Drain Valve Plate Assembly	
13	9001518	Drain Pipe	
14	9001287	Bolt	
15	9001240	Washer	
16	9001260	Nut	
17	9001526	Drain Valve to Drain Pipe Hose	
18	9001502	Hose Clamp	
19	9001503	Drain Valve Overflow Plug	
20	9001493	Hose Clamp	
21	9001227	Washer	
22	9001361	Drain Valve	
23	9001099	Drain Valve Plate Assembly	
24	253/00006/00	T-Piece	
25	223/00170/00	Exhaust Valve Hose	
26	9001287	Bolt	
27	9001240	Washer	
28	9001355	Drain Valve	
29	9001227	Washer	
30	9001249	Nut	

info@zipnasklade.ru
8(800)500-69-51

© Copyright, Alliance Laundry Systems LLC – DO NOT COPY or TRANSMIT

Door Lock

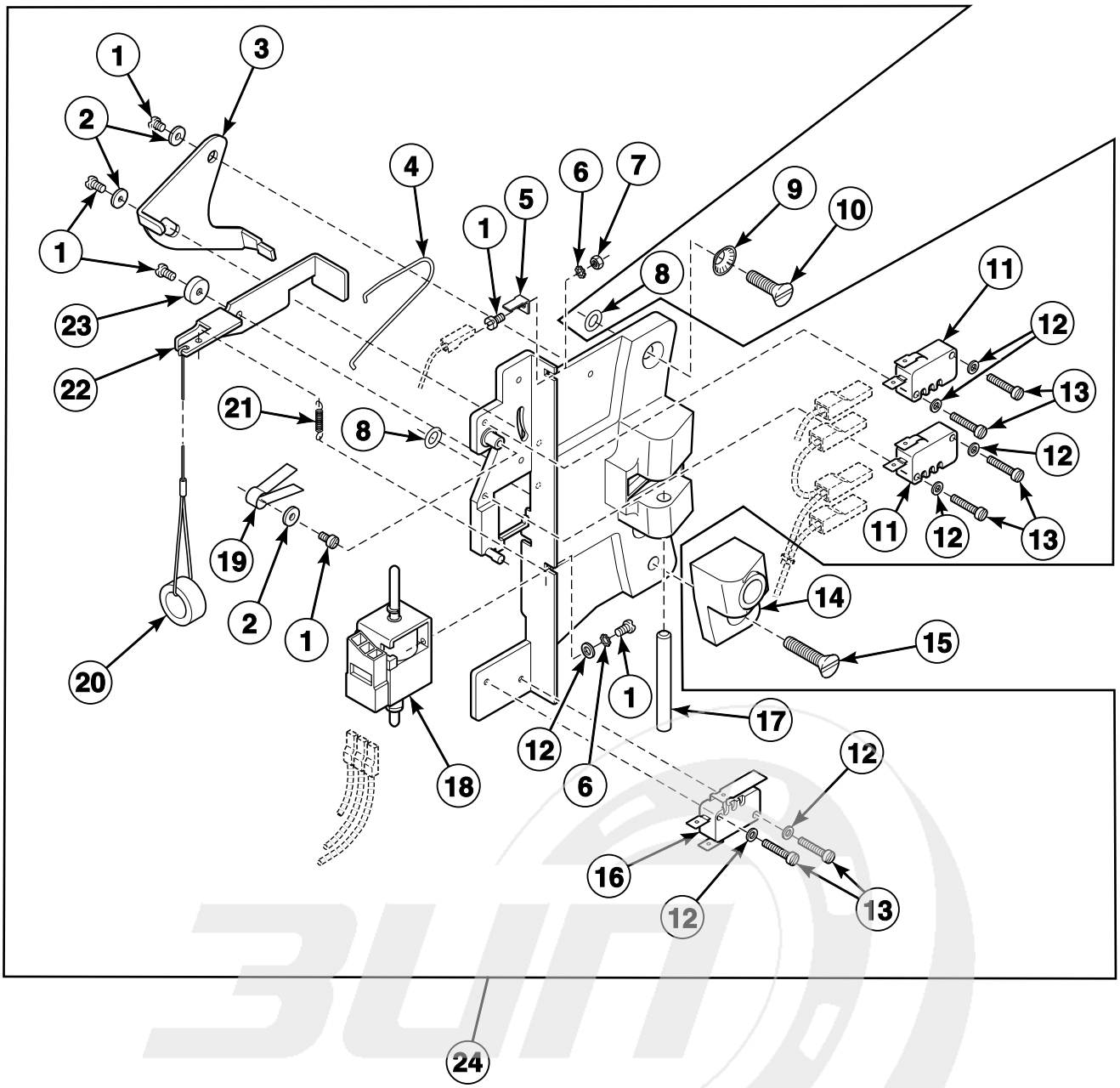

CFD128P_9001004

info@zipnasklade.ru
8(800)500-69-51

© Copyright, Alliance Laundry Systems LLC – DO NOT COPY or TRANSMIT

Door Lock

REF	PART NO.	DESCRIPTION	COMMENTS
	210/01064/10	Wire Harness	From main control to connector
	9001985	Door Lock Harness	From connector to door lock
1	207/00135/00	Screw	
2	9001221	Washer	
3	9001479	Switch Lever	
4	9001553	Lever Spring	
5	9001419	Ground Terminal	
6	9001244	Washer	
7	9001253	Nut	
8	9001469	O-Ring	
9	9001246	Washer	
10	207/00112/00	Screw	
11	9001371	Door Lock Microswitch	
12	9001222	Washer	
13	9001324	Screw	
14	9001997	Door Lock Pin and Pivot Block Kit	Includes door lock pin
15	9001333	Screw	
16	9001372	Light Microswitch	
17	9001468	Lock Shaft	
18	C000184P	Door Lock Solenoid	
19	9001558	Door Lock Spring	
20	9001950	Door Release Wire	
21	9001554	Interlock Coil Spring	
22	9001478	Interlock Lever	
23	9001477	Door Lock Spacer	
24	B12517701	Door Lock Assembly	Includes items 1-7, 11-13 and 16-23

info@zipnasklade.ru
8(800)500-69-51

© Copyright, Alliance Laundry Systems LLC – DO NOT COPY or TRANSMIT

Door (Drawing 1 of 3)

Design 6 Models

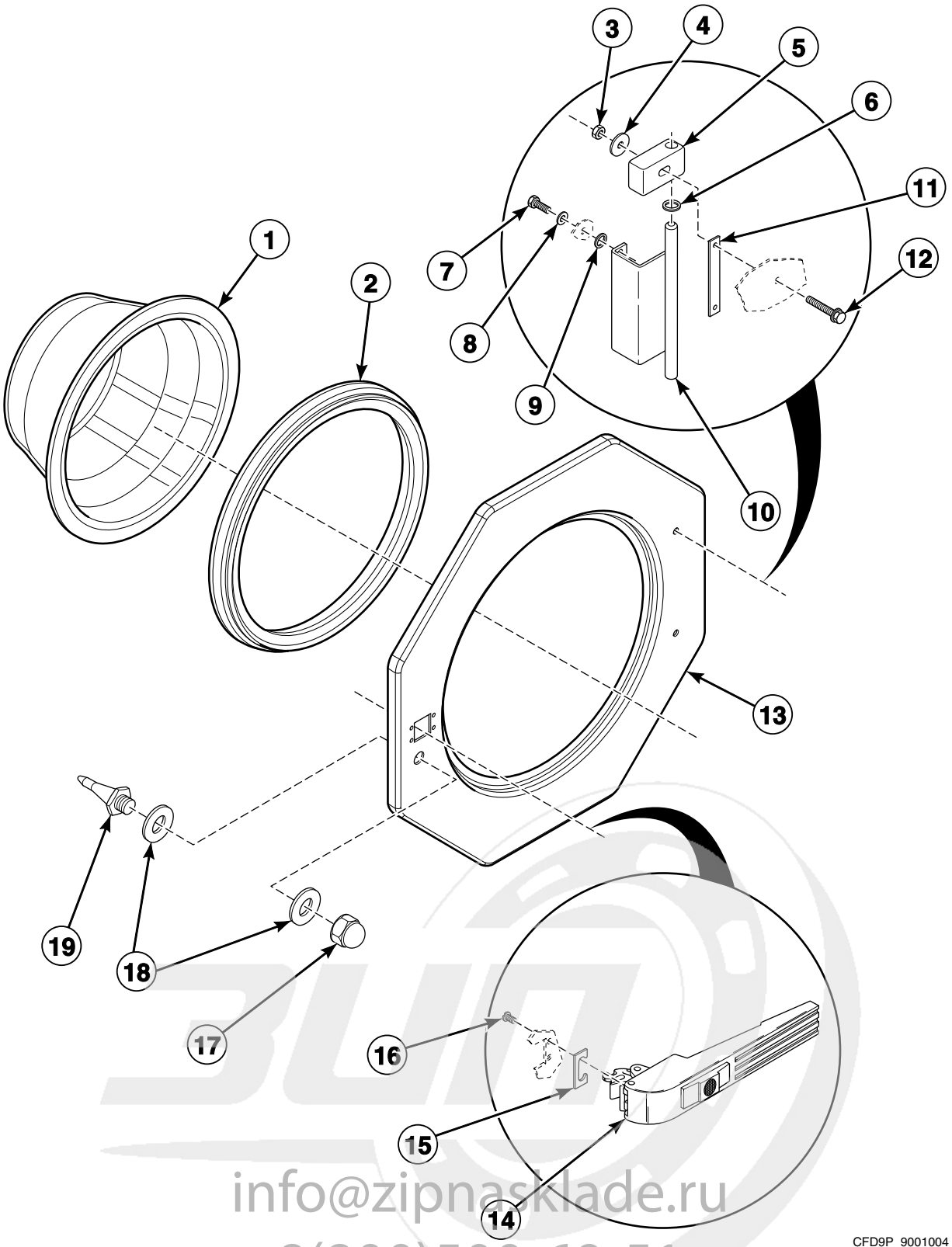

info@zipnasklade.ru
8(800)500-69-51

© Copyright, Alliance Laundry Systems LLC – DO NOT COPY or TRANSMIT

Door (Drawing 1 of 3)

REF	PART NO.	DESCRIPTION	COMMENTS
1	217/00023/00	Door Glass	
2	9001466	Door Glass Seal	
3	9001260	Nut	
4	9001235	Washer	
5	9001465	Door Hinge Assembly	
6	9001232	Washer	
7	9001274	Bolt	
8	9001230	Washer	
9	9001469	O-Ring	
10	9001485	Hinge	
11	9001033	Door Hinge Spacer	1 mm
	9001034	Door Hinge Spacer	2 mm
12	N/A	Bolt	M6 x 25
	9001341	Screw	M6 x 35
13	9001066	Front Panel	
14	217/00055/00	Door Handle	
15	9001467	Door Handle Stop	
16	9001326	Screw	
17	9001258	Nut	
18	202/00111/00	Washer	
19	9001997	Door Lock Pin and Pivot Block Kit	Includes door lock pivot lock

N/A = Part no longer available

info@zipnasklade.ru
8(800)500-69-51

© Copyright, Alliance Laundry Systems LLC – DO NOT COPY or TRANSMIT

Door (Drawing 2 of 3)

Design 7 Models Through 9/30/07

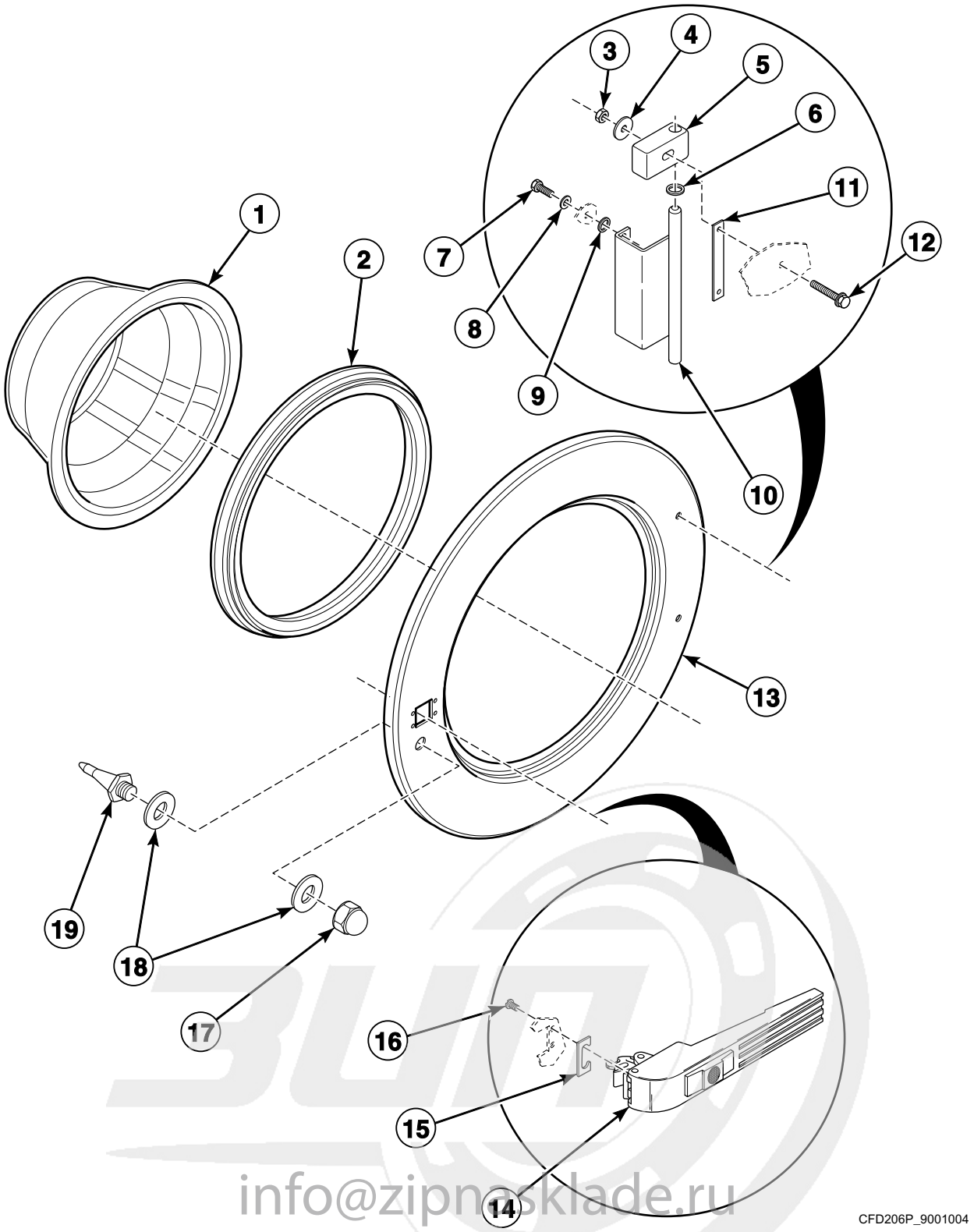

info@zipnasklade.ru
8(800)500-69-51

© Copyright, Alliance Laundry Systems LLC – DO NOT COPY or TRANSMIT

Door (Drawing 2 of 3)

REF	PART NO.	DESCRIPTION	COMMENTS
1	217/00023/00	Door Glass	
2	9001466	Door Glass Seal	
3	9001260	Nut	
4	9001235	Washer	
5	9001465	Door Hinge Assembly	
6	9001232	Washer	
7	9001274	Bolt	
8	9001230	Washer	
9	9001469	O-Ring	
10	9001485	Hinge	
11	9001033	Door Hinge Spacer	1 mm
	9001034	Door Hinge Spacer	2 mm
12	N/A	Bolt	M6 x 25
	9001341	Screw	M6 x 35
13	118/00046/10	Door Frame	
14	217/00055/00	Door Handle	
15	9001467	Door Handle Stop	
16	9001326	Screw	
17	9001258	Nut	
18	202/00111/00	Washer	
19	9001997	Door Lock Pin and Pivot Block Kit	Includes door lock pivot lock

N/A = Part no longer available

info@zipnasklade.ru
8(800)500-69-51

© Copyright, Alliance Laundry Systems LLC – DO NOT COPY or TRANSMIT

Door (Drawing 3 of 3)

Design 7 Models Starting 10/1/07

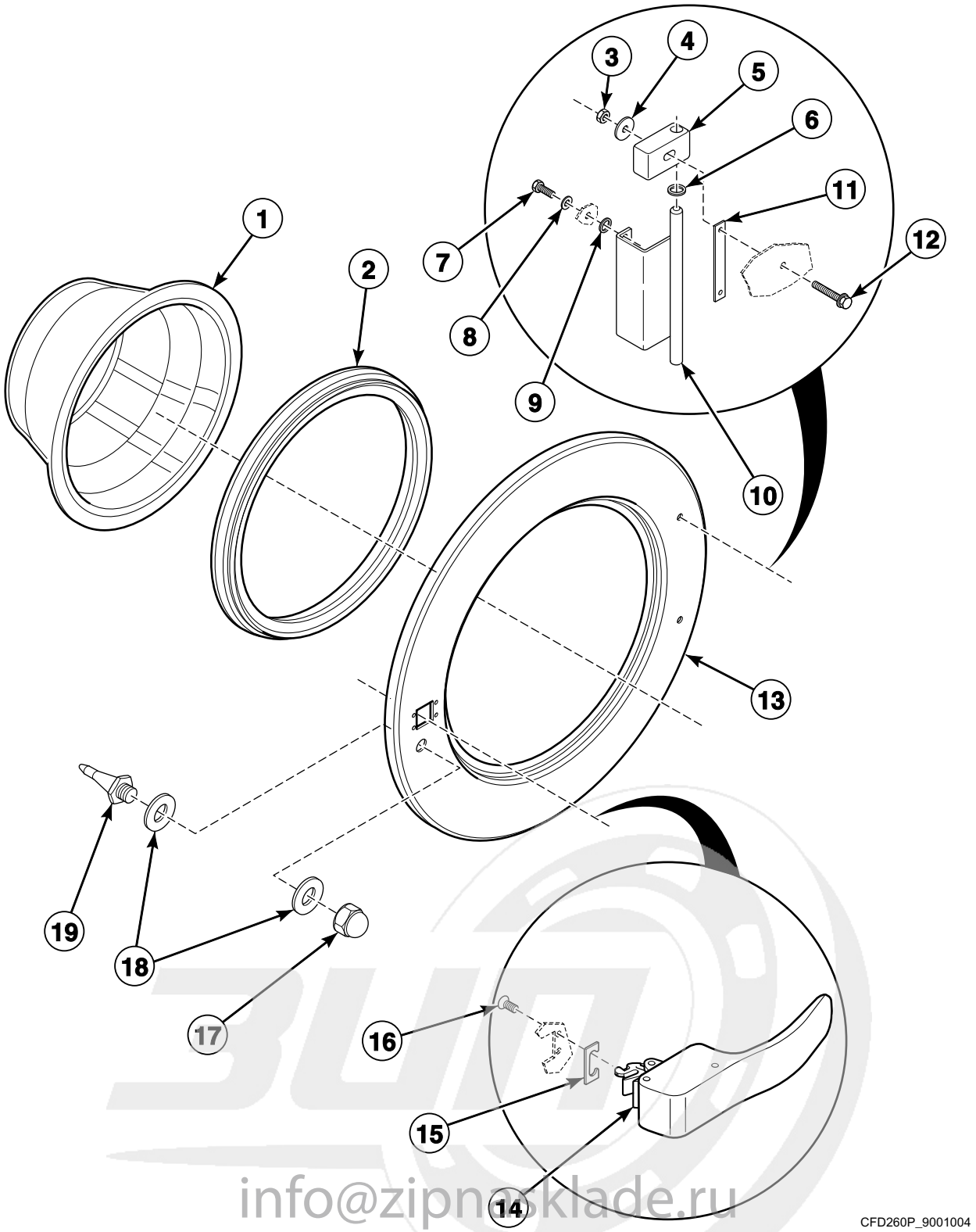

info@zipnosklade.ru
8(800)500-69-51

© Copyright, Alliance Laundry Systems LLC – DO NOT COPY or TRANSMIT

Door (Drawing 3 of 3)

REF	PART NO.	DESCRIPTION	COMMENTS
1	217/00023/00	Door Glass	
2	9001466	Door Glass Seal	
3	9001260	Nut	
4	9001235	Washer	
5	9001465	Door Hinge Assembly	
6	9001232	Washer	
7	9001274	Bolt	
8	9001230	Washer	
9	9001469	O-Ring	
10	9001485	Hinge	
11	9001033	Door Hinge Spacer	1 mm
	9001034	Door Hinge Spacer	2 mm
12	N/A	Bolt	M6 x 25
	9001341	Screw	M6 x 35
13	118/00046/10	Door Frame	
14	217/00065/00	Door Handle	
15	9001467	Door Handle Stop	
16	B12500801	Screw	
17	9001258	Nut	
18	202/00111/00	Washer	
19	9001997	Door Lock Pin and Pivot Block Kit	Includes door lock pivot lock

N/A = Part no longer available

info@zipnasklade.ru
8(800)500-69-51

© Copyright, Alliance Laundry Systems LLC – DO NOT COPY or TRANSMIT

Door Handle

Models Through 9/30/07

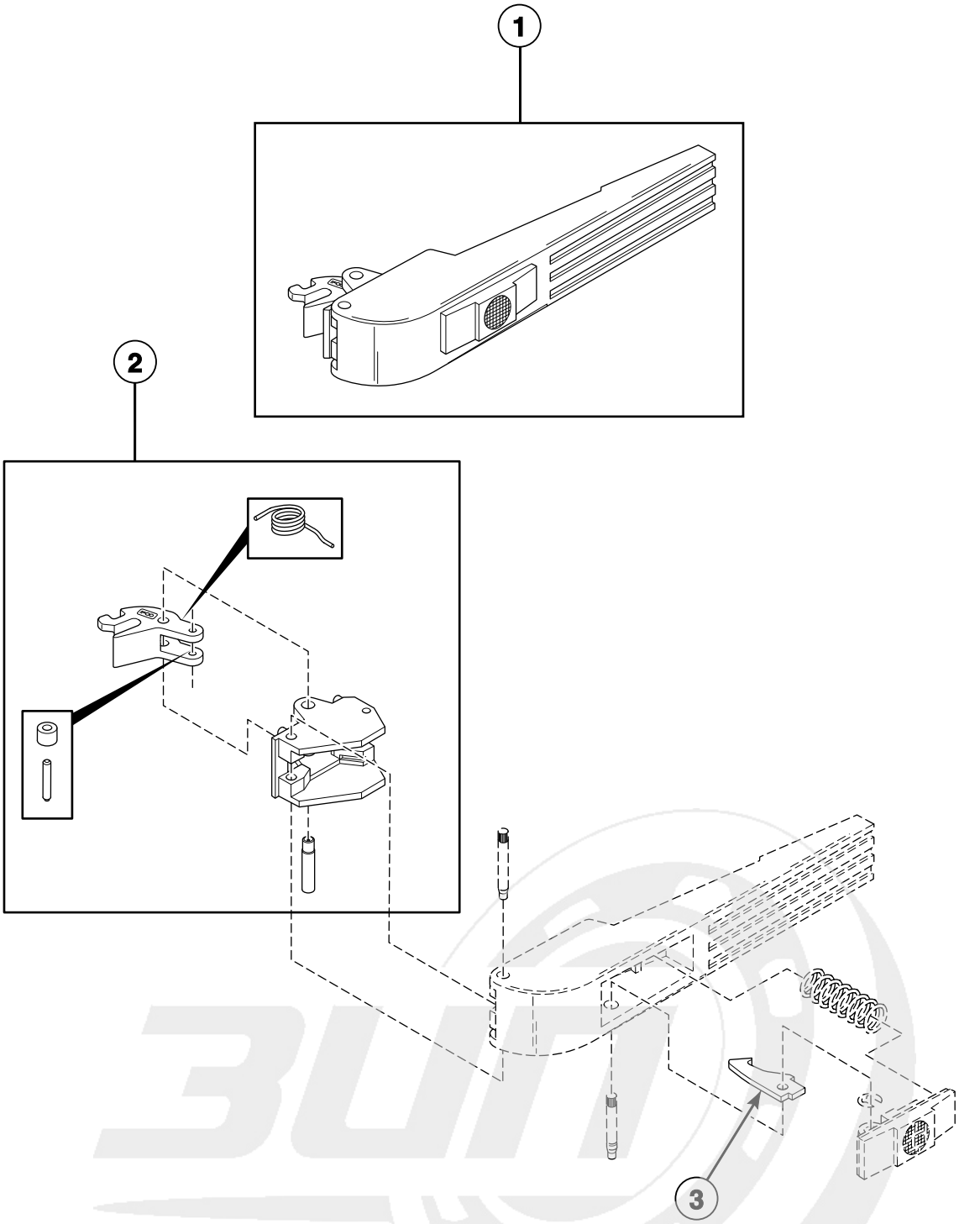

CFD10P_9001004

info@zipnasklade.ru
8(800)500-69-51

© Copyright, Alliance Laundry Systems LLC – DO NOT COPY or TRANSMIT

Door Handle

REF	PART NO.	DESCRIPTION	COMMENTS
1	217/00055/00	Door Handle	
2	9001474	Door Handle Latch	
3	9001473	Door Handle Catch	

info@zipnasklade.ru
8(800)500-69-51

© Copyright, Alliance Laundry Systems LLC – DO NOT COPY or TRANSMIT

Control Panel

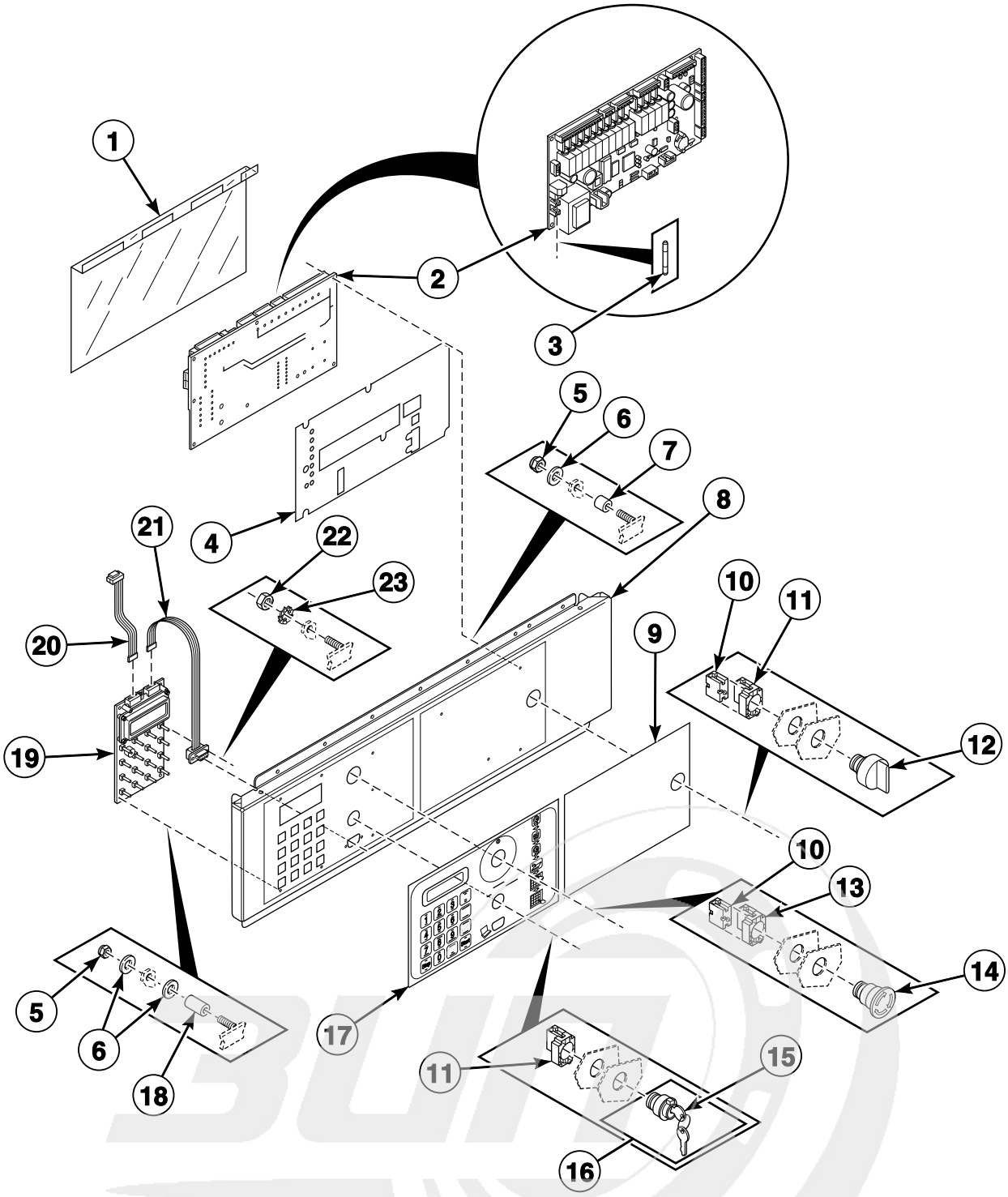

info@zipnasklade.ru
8(800)500-69-51

© Copyright, Alliance Laundry Systems LLC – DO NOT COPY or TRANSMIT

Control Panel

REF	PART NO.	DESCRIPTION	COMMENTS
1	229/00289/00	Circuit Board Cover	
2	9002100	Main Control	
	210/01304/07	Soap Harness	Connects the main control to the soap board
3	9001379	Fuse	
4	229/00255/00	Insulating Sticker	
5	9001269	Nut	
6	9001523	Washer	
7	9001425	Spacer	
8	9001049	Control Panel	18 and 25 pound models
	9001050	Control Panel	35 pound models
9	F8435601	Overlay	UX models
	9001563	Overlay	SX models
	9001890	Logo Decal	HX models
10	44018901	Contact Block	
11	9001356	Switch Base	
12	9002072	Switch Knob	Steam and electric heat models
13	44018701	Contact Block	
14	44018801	Pushbutton	
15	9001756	Programming Key	Key code 455
16	9001378	Programming Key Contact Switch	Includes item 15
17	F9001561	Overlay	Control
18	9001659	Spacer	
19	209/00580/03	Display	
20	9001417	Flat Cable	
21	9001418	Programming Cable	
22	9001253	Nut	
23	9001244	Washer	

info@zipnasklade.ru
8(800)500-69-51

© Copyright, Alliance Laundry Systems LLC – DO NOT COPY or TRANSMIT

Control Module (Drawing 1 of 2)

Models HX18PVQU6, HX18PVXU6, HX25PVQU6, HX25PVXU6, HX35PVQU6, HX35PVXU6, SX18PVQU6, SX18PVXU6, SX25PVQU6, SX25PVXU6, SX35PVQU6, SX35PVXU6, UX18PVNU6, UX18PVPU6, UX18PVQU6, UX18PVXU6, UX25PVNU6, UX25PVPU6, UX25PVQU6, UX25PVXU6, UX35PVNU6, UX35PVPU6, UX35PVQU6 and UX35PVXU6

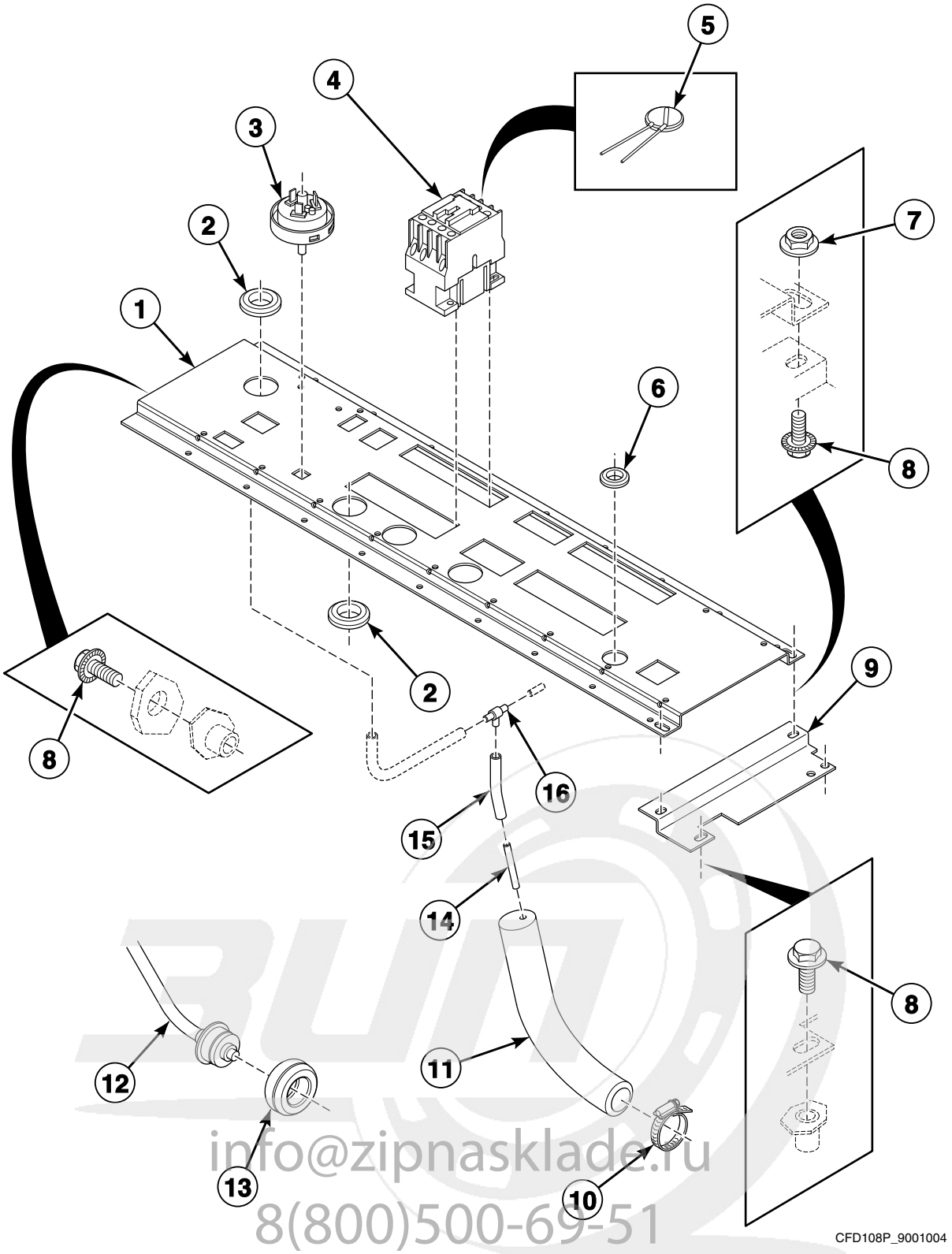

info@zipnasklade.ru
8(800)500-69-51

© Copyright, Alliance Laundry Systems LLC – DO NOT COPY or TRANSMIT

Control Module (Drawing 1 of 2)

REF	PART NO.	DESCRIPTION	COMMENTS
1	9001052	Electrical Component Plate	Models HX18PVQU6, HX18PVXU6, SX18PVQU6, SX18PVXU6, UX18PVNU6, UX18PVPU6, UX18PVQU6 and UX18PVXU6
	9001039	Electrical Plate Assembly	Models HX25PVQU6, HX25PVXU6, SX25PVQU6, SX25PVXU6, UX25PVNU6, UX25PVPU6, UX25PVQU6 and UX25PVXU6
	9001047	Electrical Component Plate	Models HX35PVQU6, HX35PVXU6, SX35PVQU6, SX35PVXU6, UX35PVNU6, UX35PVPU6, UX35PVQU6 and UX35PVXU6
2	9001539	Grommet	
3	9001351	Pressure Switch	
4	9002066	Contactor	LC1D1810M7; Heating
	9001352	Contactor	LC1D0901M7; Heating
5	9001746	Noise Suppressor	Models HX18PVQU6, HX18PVXU6, HX25PVQU6, HX25PVXU6, SX18PVQU6, SX18PVXU6, SX25PVQU6, SX25PVXU6, UX18PVNU6, UX18PVPU6, UX18PVQU6, UX18PVXU6, UX25PVNU6, UX25PVPU6, UX25PVQU6 and UX25PVXU6
6	9001530	Grommet	
7	9001311	Nut	
8	9001310	Bolt	
9	9001048	Electrical Component Plate Extension	
10	9001492	Hose Clamp	
11	9001542	Pressure Switch Elbow	
12	210/01064/16	Thermostat	
13	9001564	Thermostat Seal	
14	9001496	Hose Barb	
15	223/00333/00	Pressure Hose	
16	223/00173/10	Pressure Switch Hose Tee	

info@zipnasklade.ru
8(800)500-69-51

© Copyright, Alliance Laundry Systems LLC – DO NOT COPY or TRANSMIT

Control Module (Drawing 2 of 2)

All Models Except HX18PVQU6, HX18PVXU6, HX25PVQU6, HX25PVXU6, HX35PVQU6, HX35PVXU6, SX18PVQU6, SX18PVXU6, SX25PVQU6, SX25PVXU6, SX35PVQU6, SX35PVXU6, UX18PVNU6, UX18PVPU6, UX18PVQU6, UX18PVXU6, UX25PVNU6, UX25PVPU6, UX25PVQU6, UX25PVXU6, UX35PVNU6, UX35PVPU6, UX35PVQU6 and UX35PVXU6

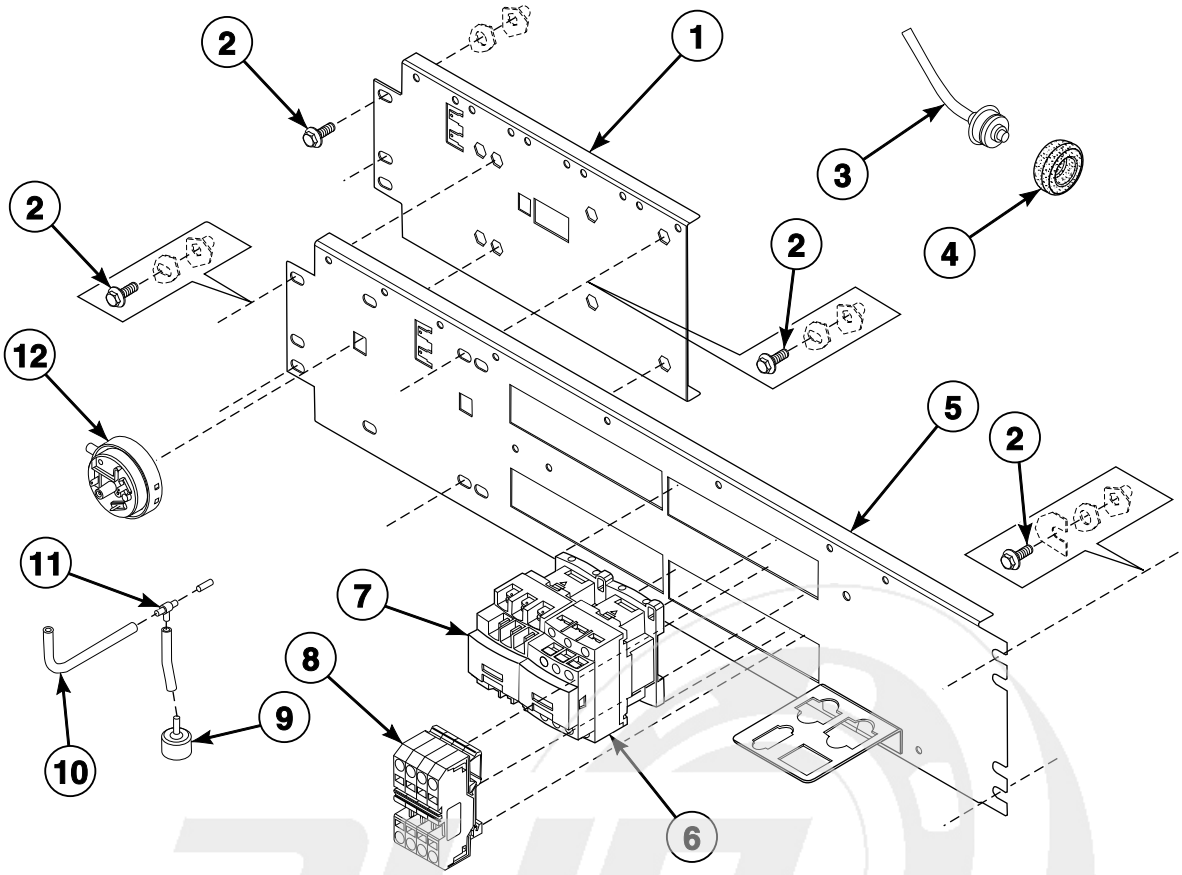

CFD147P_9001004

info@zipnasklade.ru
8(800)500-69-51

© Copyright, Alliance Laundry Systems LLC – DO NOT COPY or TRANSMIT

Control Module (Drawing 2 of 2)

REF	PART NO.	DESCRIPTION	COMMENTS
1	9001958	Electrical Component Mounting Plate	
2	9001310	Bolt	
3	9001669	Thermostat	
4	9001564	Thermostat Seal	
5	9001959	Electrical Component Mounting Plate	
	9001960	Support Connector	
6	9002066	Contactor	Heating
7	9001352	Contactor	Heating
8	9002021	Overload Contactor	2006-1201
	9002022	Overload Contactor	2006-1204
	9002023	Overload Contactor	2006-1304
	9002024	Overload Contactor	2006-1301
	9002025	Overload Contactor	2010-1201
	9002026	Overload Contactor	2010-1204
	9002027	Overload Contactor	2010-1301
9	9001932	Pressure Switch Cap	
10	223/00333/00	Pressure Hose	
11	223/00173/10	Pressure Switch Hose Tee	
12	209/00027/10	Pressure Switch	

info@zipnasklade.ru
8(800)500-69-51

© Copyright, Alliance Laundry Systems LLC – DO NOT COPY or TRANSMIT

Front, Left Side and Upper Back Panels (Drawing 1 of 2)

Models HX18PVQU6, HX18PVXU6, HX25PVQU6, HX25PVXU6, HX35PVQU6, HX35PVXU6, SX18PVQU6, SX18PVXU6, SX25PVQU6, SX25PVXU6, SX35PVQU6, SX35PVXU6, UX18PVNU6, UX18PVPU6, UX18PVQU6, UX18PVXU6, UX25PVNU6, UX25PVPU6, UX25PVQU6, UX25PVXU6, UX35PVNU6, UX35PVPU6, UX35PVQU6 and UX35PVXU6

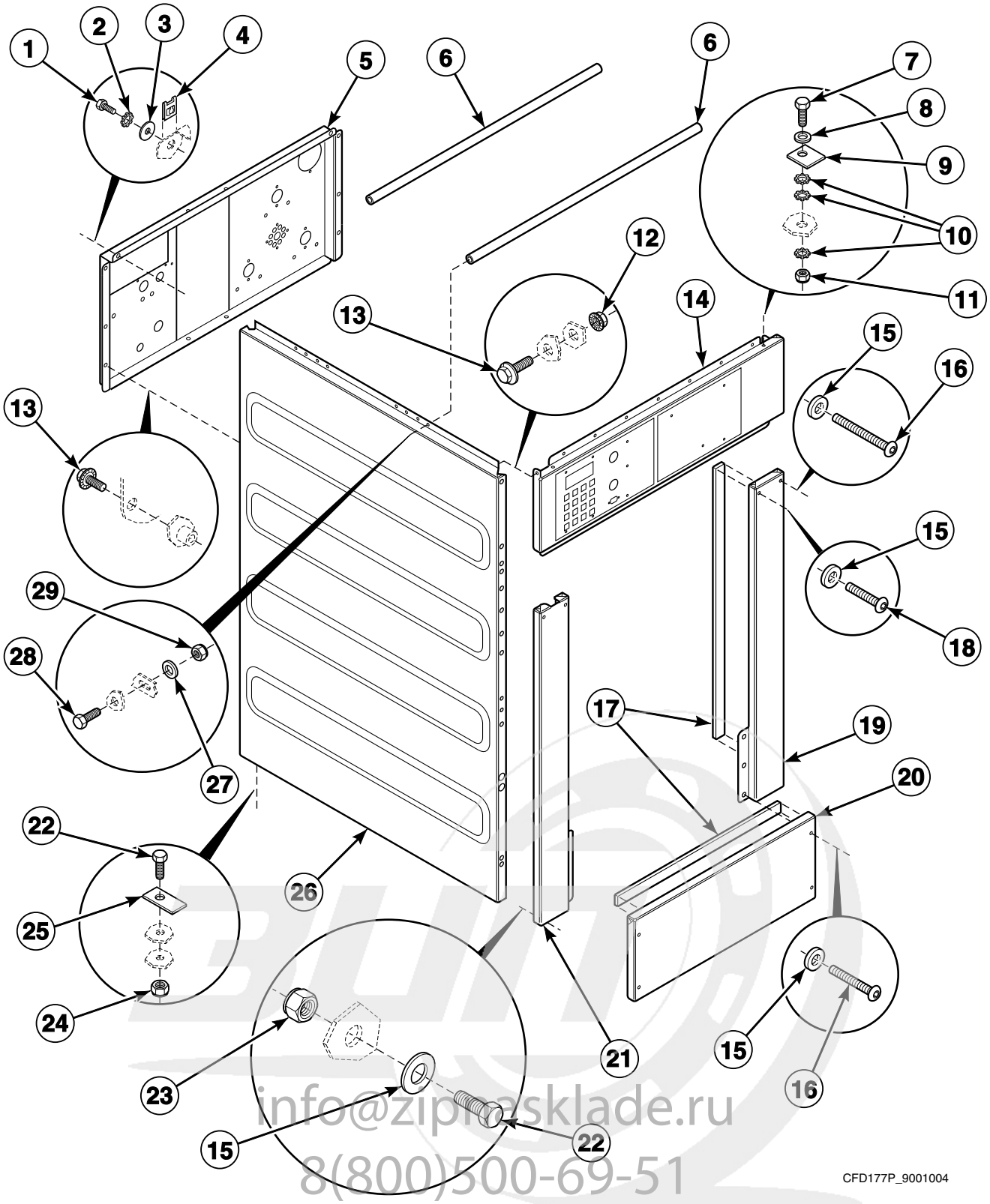

info@zipmasklade.ru
8(800)500-69-51

© Copyright, Alliance Laundry Systems LLC – DO NOT COPY or TRANSMIT

Front, Left Side and Upper Back Panels (Drawing 1 of 2)

REF	PART NO.	DESCRIPTION	COMMENTS
1	9001343	Screw	
2	9001247	Washer	
3	9001213	Washer	
4	9001347	Nut	
5	9001081	Backbridge	18 and 25 pound models
	9001063	Backbridge	35 pound models
6	9001992	Crossbar	18 and 25 pound models
	9001908	Crossbar	35 pound models
7	9001276	Bolt	
8	9001228	Washer	
9	9001036	Bearing Retainer Ring	
10	9001242	Washer	
11	9001251	Nut	
12	9001311	Nut	
13	9001310	Bolt	
14	9001049	Control Panel	18 and 25 pound models
	9001050	Control Panel	35 pound models
15	9001236	Washer	
16	9001661	Screw	
17	9001608	Gasket	
18	9001662	Screw	
19	9001078	Rear Right Panel	18 and 25 pound models
	9001692	Right Front Panel	35 pound models
20	9001083	Kickplate	18 and 25 pound models
	9001693	Kickplate	35 pound models
21	9001077	Front Left Panel	18 and 25 pound models
	9001694	Left Front Panel	35 pound models
22	9001274	Bolt	
23	9001260	Nut	35 pound models
24	9001254	Nut	
25	9001037	Outlet Pipe Plate Assembly	
26	9001070	Side Panel	18 pound models
	9001069	Side Panel	25 pound models
	9001086	Side Panel	35 pound models
27	9001229	Washer	
28	9001993	Screw	18 and 25 pound models
	9001292	Bolt	35 pound models
29	9001267	Nut	

info@zipnasklade.ru
8(800)500-69-51

© Copyright, Alliance Laundry Systems LLC – DO NOT COPY or TRANSMIT

Front, Left Side and Upper Back Panels (Drawing 2 of 2)

All Models Except HX18PVQU6, HX18PVXU6, HX25PVQU6, HX25PVXU6, HX35PVQU6, HX35PVXU6, SX18PVQU6, SX18PVXU6, SX25PVQU6, SX25PVXU6, SX35PVQU6, SX35PVXU6, UX18PVNU6, UX18PVPU6, UX18PVQU6, UX18PVXU6, UX25PVNU6, UX25PVPU6, UX25PVQU6, UX25PVXU6, UX35PVNU6, UX35PVPU6, UX35PVQU6 and UX35PVXU6

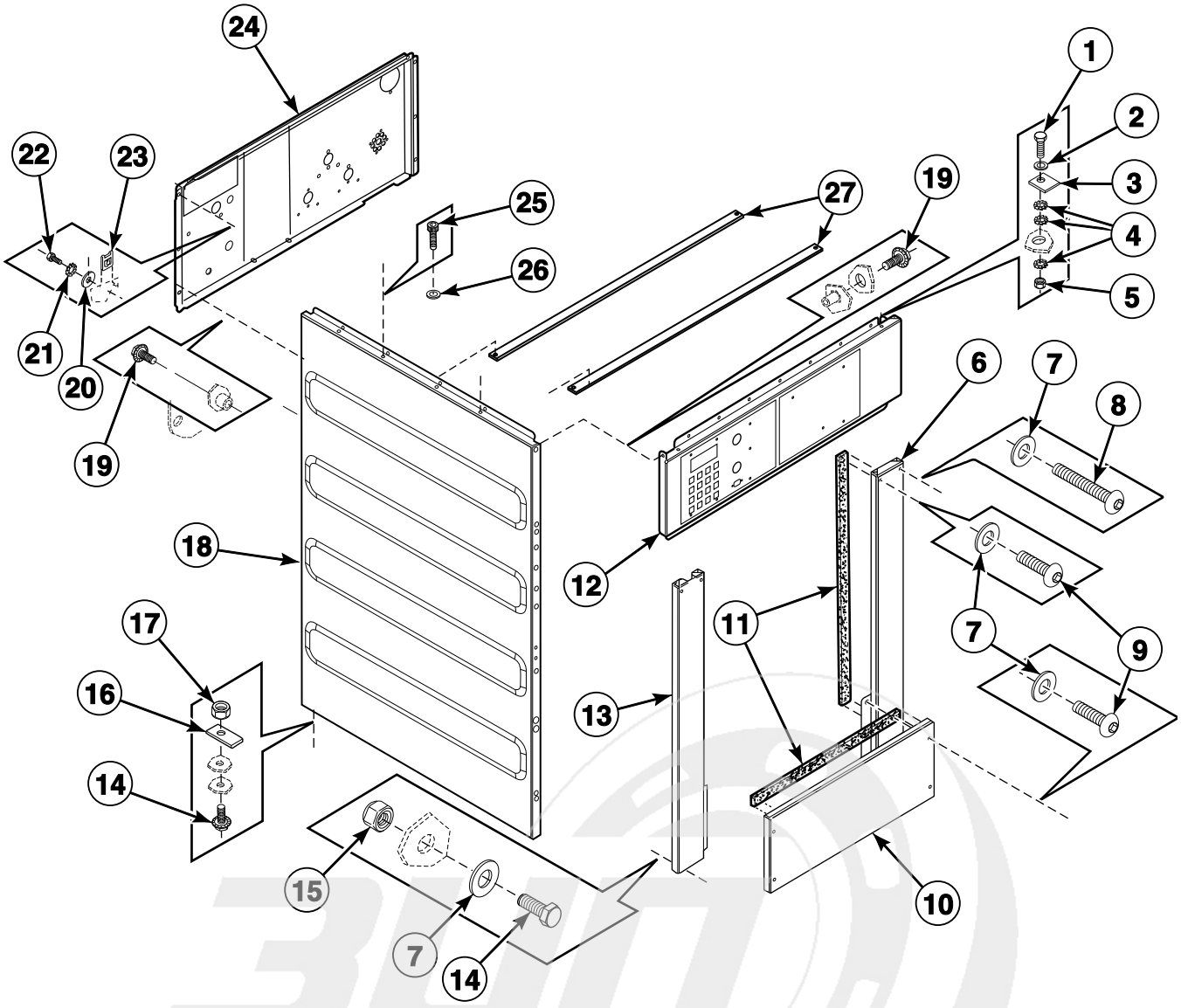

CFD497P_9001004

info@zipnasklade.ru
8(800)500-69-51

© Copyright, Alliance Laundry Systems LLC – DO NOT COPY or TRANSMIT

Front, Left Side and Upper Back Panels (Drawing 2 of 2)

REF	PART NO.	DESCRIPTION	COMMENTS
1	9001276	Bolt	
2	9001228	Washer	
3	9001036	Bearing Retainer Ring	
4	9001242	Washer	
5	9001251	Nut	
6	9002041	Right Front Panel	18 and 25 pound models
	9001692	Right Front Panel	35 pound models
7	9001236	Washer	
8	9001661	Screw	
9	9001662	Screw	
10	9002042	Kickplate	18 and 25 pound models
	9001693	Kickplate	35 pound models
11	9001608	Gasket	
12	9002043	Control Panel	
13	111/10089/00	Side Panel	18 pound models; Stainless steel
	111/60031/00	Side Panel	18 pound models; Black
	111/10089/60	Side Panel	18 pound models; Gray
	9002044	Left Front Panel	25 pound models
	9001694	Left Front Panel	35 pound models
14	9001274	Bolt	
15	9001260	Nut	
16	9001037	Outlet Pipe Plate Assembly	
17	9001254	Nut	
18	9002045	Side Panel	Left; 18 and 25 pound models
	9001086	Side Panel	Left; 35 pound models
19	9001310	Bolt	
20	9001213	Washer	
21	9001247	Washer	
22	9001984	Screw	
23	9001347	Nut	
24	9001081	Backbridge	18 and 25 pound models
	9002061	Backbridge	35 pound models
25	9002018	Screw	
26	B12421401	Washer	
27	9001992	Crossbar	18 and 25 pound models
	9002019	Soap Dispenser Crossbar	35 pound models

info@zipnasklade.ru
8(800)500-69-51

© Copyright, Alliance Laundry Systems LLC – DO NOT COPY or TRANSMIT

Top, Right Side and Lower Back Panels (Drawing 1 of 2)

Models HX18PVQU6, HX18PVXU6, HX25PVQU6, HX25PVXU6, HX35PVQU6, HX35PVXU6, SX18PVQU6, SX18PVXU6, SX25PVQU6, SX25PVXU6, SX35PVQU6, SX35PVXU6, UX18PVNU6, UX18PVPU6, UX18PVQU6, UX18PVXU6, UX25PVNU6, UX25PVPU6, UX25PVQU6, UX25PVXU6, UX35PVNU6, UX35PVPU6, UX35PVQU6 and UX35PVXU6

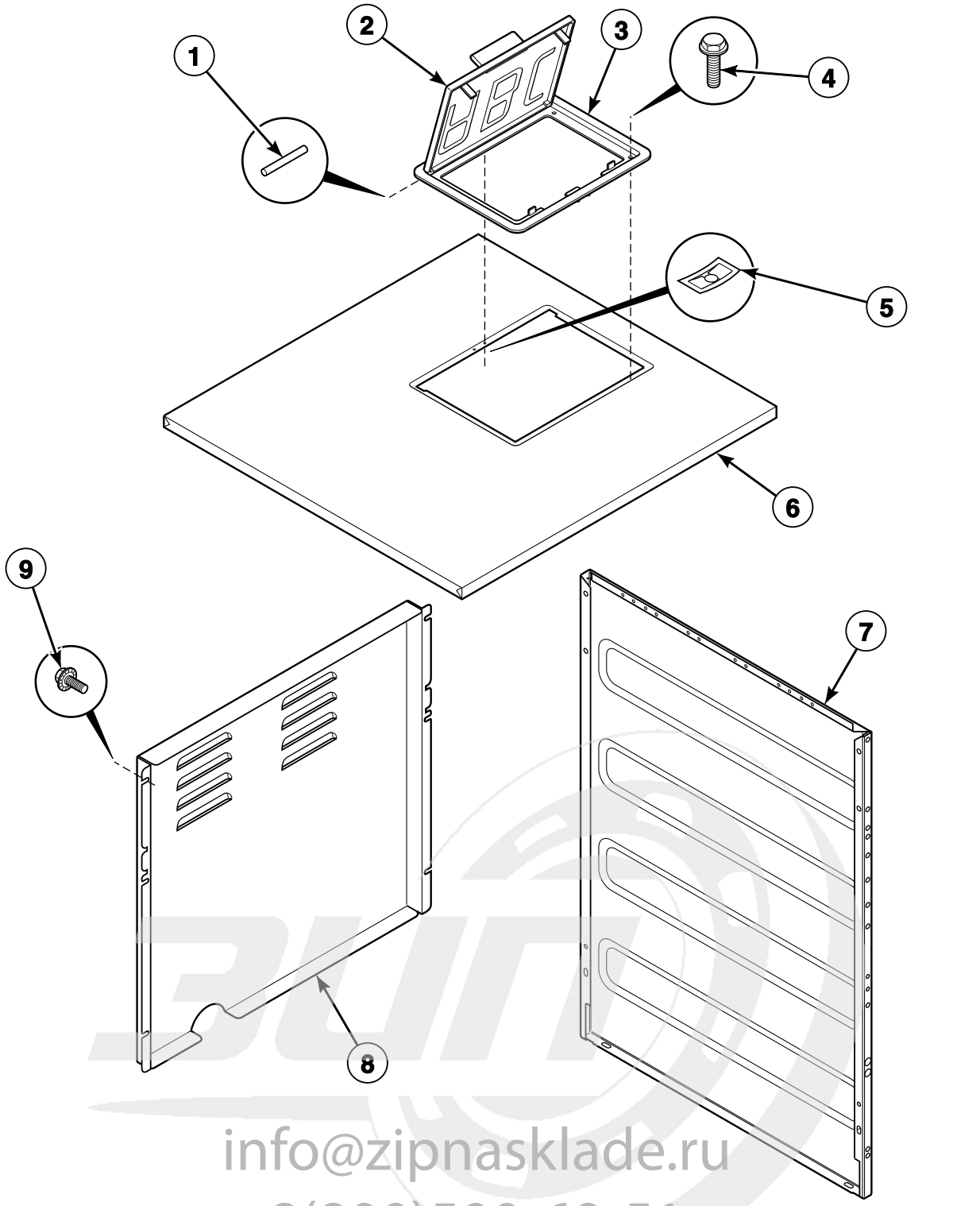

info@zipnasklade.ru
8(800)500-69-51

CFD14P_9001004

© Copyright, Alliance Laundry Systems LLC – DO NOT COPY or TRANSMIT

Top, Right Side and Lower Back Panels (Drawing 1 of 2)

REF	PART NO.	DESCRIPTION	COMMENTS
1	9001516	Soap Dispenser Cover Hinge Rod	2 required
2	9001514	Soap Dispenser Cover	
3	9001515	Soap Dispenser Frame	
4	9001342	Bolt	
5	9001349	Nut	
6	9001084	Top Panel	Models HX18PVQU6, HX18PVXU6, SX18PVQU6, SX18PVXU6, UX18PVNU6, UX18PVPU6, UX18PVQU6 and UX18PVXU6
	9001085	Top Panel	Models HX25PVQU6, HX25PVXU6, SX25PVQU6, SX25PVXU6, UX25PVNU6, UX25PVPU6, UX25PVQU6 and UX25PVXU6
	111/22743/00	Top Panel	Models HX35PVQU6, HX35PVXU6, SX35PVQU6, SX35PVXU6, UX35PVNU6, UX35PVPU6, UX35PVQU6 and UX35PVXU6
7	9001070	Side Panel	Models HX18PVQU6, HX18PVXU6, SX18PVQU6, SX18PVXU6, UX18PVNU6, UX18PVPU6, UX18PVQU6 and UX18PVXU6
	9001069	Side Panel	Models HX25PVQU6, HX25PVXU6, SX25PVQU6, SX25PVXU6, UX25PVNU6, UX25PVPU6, UX25PVQU6 and UX25PVXU6
	9001086	Side Panel	Models HX35PVQU6, HX35PVXU6, SX35PVQU6, SX35PVXU6, UX35PVNU6, UX35PVPU6, UX35PVQU6 and UX35PVXU6
8	9001082	Rear Lower Panel	Models HX18PVQU6, HX18PVXU6, HX25PVQU6, HX25PVXU6, SX18PVQU6, SX18PVXU6, SX25PVQU6, SX25PVXU6, UX18PVNU6, UX18PVPU6, UX18PVQU6, UX18PVXU6, UX25PVNU6, UX25PVPU6, UX25PVQU6 and UX25PVXU6
	9001153	Back Panel	Models HX35PVQU6, HX35PVXU6, SX35PVQU6, SX35PVXU6, UX35PVNU6, UX35PVPU6, UX35PVQU6 and UX35PVXU6
9	9001310	Bolt	

info@zipnasklade.ru
8(800)500-69-51

© Copyright, Alliance Laundry Systems LLC – DO NOT COPY or TRANSMIT

Top, Right Side and Lower Back Panels (Drawing 2 of 2)

All Models Except HX18PVQU6, HX18PVXU6, HX25PVQU6, HX25PVXU6, HX35PVQU6, HX35PVXU6, SX18PVQU6, SX18PVXU6, SX25PVQU6, SX25PVXU6, SX35PVQU6, SX35PVXU6, UX18PVNU6, UX18PVPU6, UX18PVQU6, UX18PVXU6, UX25PVNU6, UX25PVPU6, UX25PVQU6, UX25PVXU6, UX35PVNU6, UX35PVPU6, UX35PVQU6 and UX35PVXU6

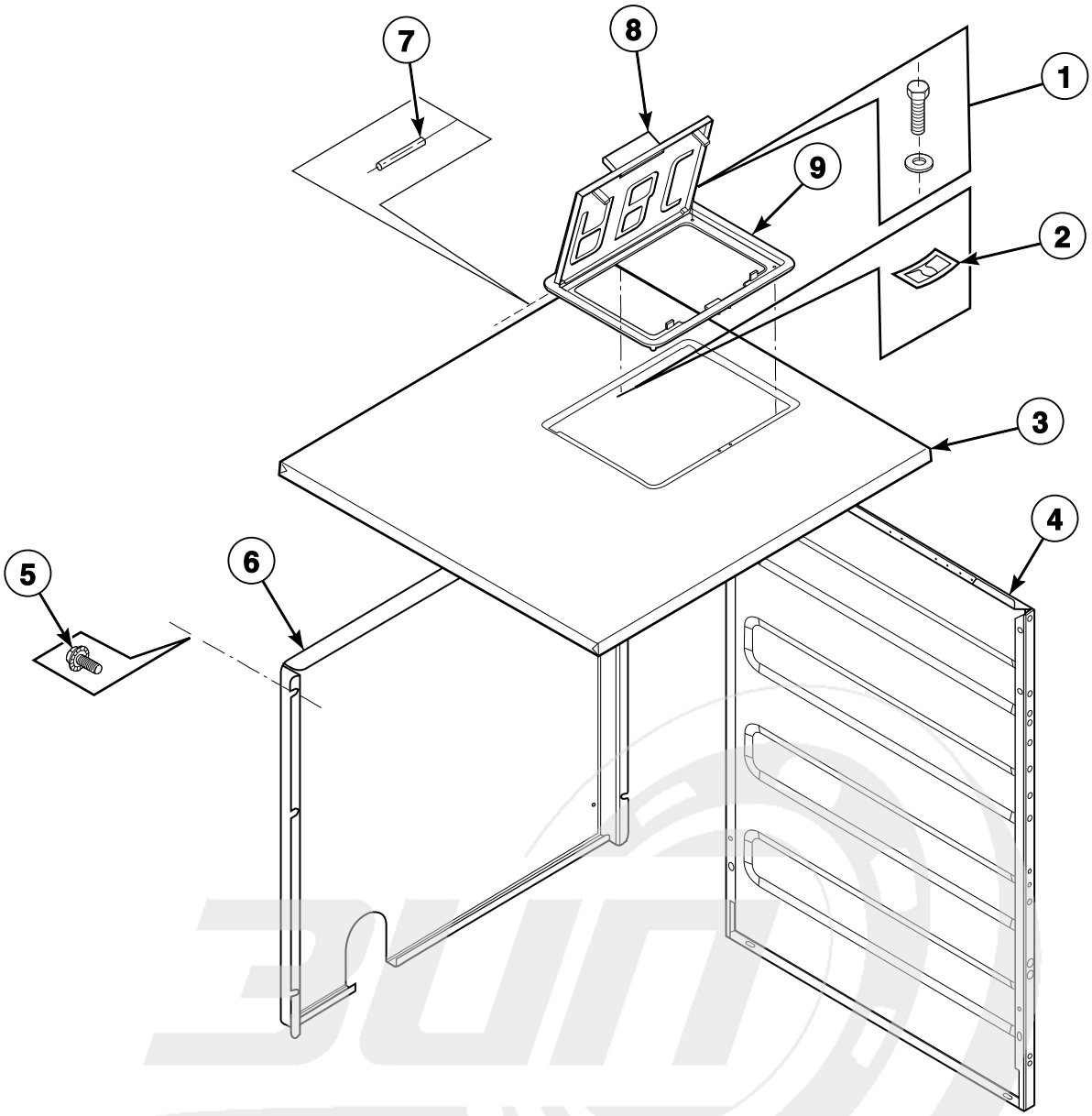

CFD182P_9001004

info@zipnasklade.ru
8(800)500-69-51

© Copyright, Alliance Laundry Systems LLC – DO NOT COPY or TRANSMIT

Top, Right Side and Lower Back Panels (Drawing 2 of 2)

REF	PART NO.	DESCRIPTION	COMMENTS
1	N/A	Bolt	
2	9001349	Nut	
3	111/10089/00	Side Panel	18 pound models; Stainless steel
	111/60031/00	Side Panel	18 pound models; Black
	111/10089/60	Side Panel	18 pound models; Gray
	9001084	Top Panel	25 pound models
	111/22743/00	Top Panel	35 pound models
4	9001086	Side Panel	Right; 35 pound models
	9001069	Side Panel	18 and 25 pound models
5	9001310	Bolt	
6	9001153	Back Panel	35 pound models
	9001082	Rear Lower Panel	18 and 25 pound models
7	9001516	Soap Dispenser Cover Hinge Rod	2 required
8	9001514	Soap Dispenser Cover	
9	9001515	Soap Dispenser Frame	

N/A = Part no longer available

info@zipnasklade.ru
8(800)500-69-51

© Copyright, Alliance Laundry Systems LLC – DO NOT COPY or TRANSMIT

Upper Back Panel (Drawing 1 of 4)

Models HX18PVQU6, HX18PVXU6, HX25PVQU6, HX25PVXU6, HX35PVQU6, HX35PVXU6, SX18PVQU6, SX18PVXU6, SX25PVQU6, SX25PVXU6, SX35PVQU6, SX35PVXU6, UX18PVNU6, UX18PVPU6, UX18PVQU6, UX18PVXU6, UX25PVNU6, UX25PVPU6, UX25PVQU6, UX25PVXU6, UX35PVNU6, UX35PVPU6, UX35PVQU6 and UX35PVXU6

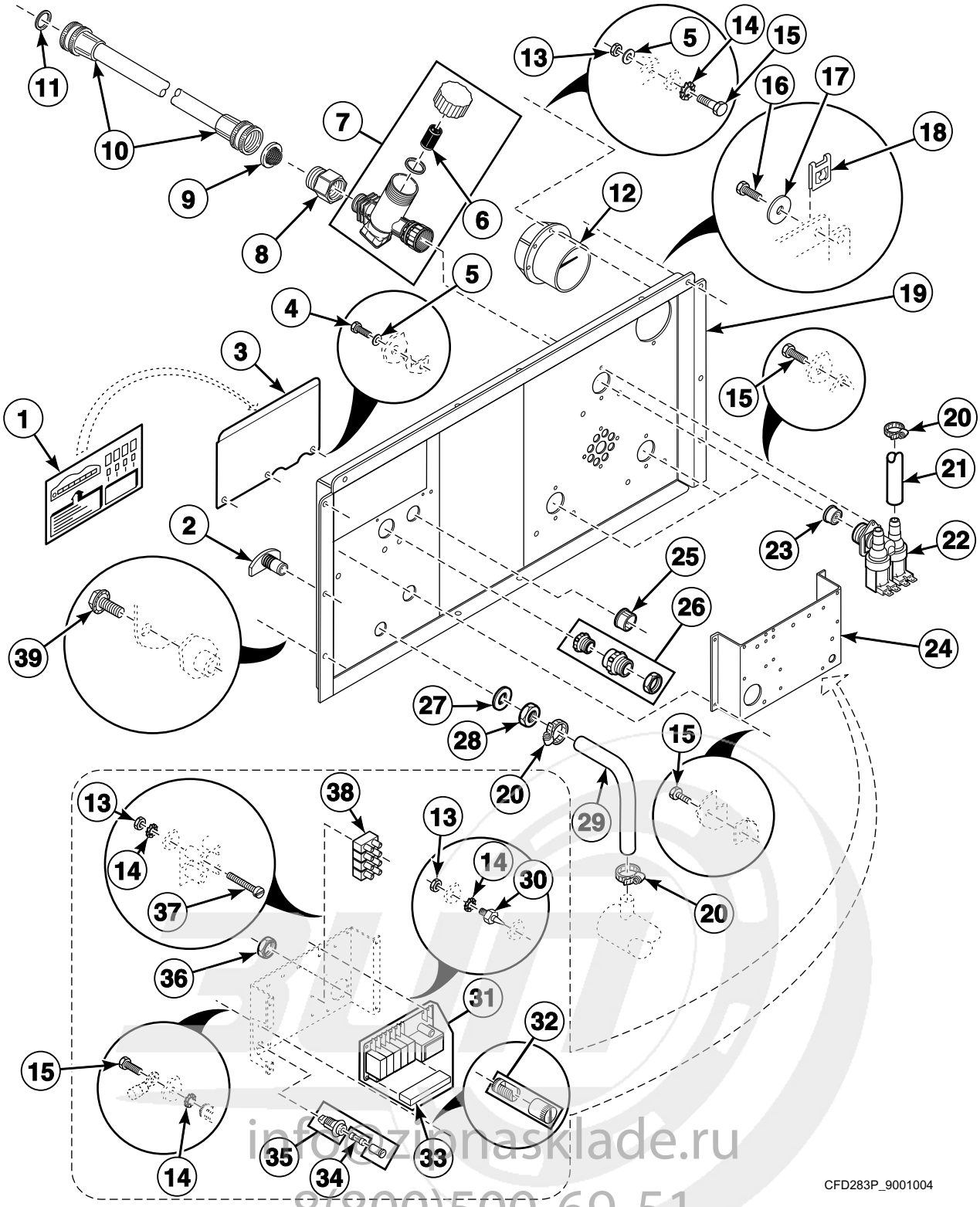

info@zhanasklade.ru
8(800)500-69-51

© Copyright, Alliance Laundry Systems LLC – DO NOT COPY or TRANSMIT

Upper Back Panel (Drawing 1 of 4)

REF	PART NO.	DESCRIPTION	COMMENTS
1	9001594	Electrical Connection Sticker	
2	9001487	Prewash and Mainwash Nozzle	
3	9001040	Electrical Connection Plate	
4	9001291	Bolt	
5	9001229	Washer	
6	209/00385/01	Filter	
7	209/00385/00	Filter	
8	9001990	Water Valve Adapter	Converts from metric to standard thread
9	803615	Washer	
10	F200164	Water Hose	Standard thread
	F200166	Water Hose	Metric thread
11	20290	Washer	
12	9001510	Hose Vent	
13	9001252	Nut	
14	9001243	Washer	
15	9001292	Bolt	
16	9001343	Screw	
17	9001213	Washer	
18	9001344	Nut	
19	9001081	Backbridge	18 and 25 pound models
	9001063	Backbridge	35 pound models
20	F200205	Hose Clamp	No. 10
21	9001499	Water Hose	
22	B12519501	2-Way Inlet Valve	Standard thread; 3 used; Includes item 20; G581P3 Repair Kit
	9001747	Inlet Valve	Metric thread; 3 used; Includes item 20
23	F200052400	Inlet Valve Restrictor	Cold water valve
	223/00390/00	Flow Restrictor	Hot water valve
24	9001051	Electrical Connection Plate	
25	9001421	Plug	
26	9001433	Cordlock	M20
	9001434	Cordlock	M25
	9001435	Nut	M20
	9001436	Nut	M25
27	9001209	Washer	18 and 25 pound models
	N/A	Washer	35 pound models
28	9001270	Nut	
29	9001498	Water Hose	
30	9001429	Standoff	
31	9001366	Soap Injection PCB with Fuse	Includes item 33
32	9001350	Ground Terminal	
33	9001888	Connector	
34	9001384	Fuse	
35	9001364	Fuse Holder	
36	9001539	Grommet	
37	9001329	Screw	
38	9001354	Terminal Block	
39	9001310	Bolt	

N/A = Part no longer available

info@zipnasklade.ru
8(800)500-69-51

© Copyright, Alliance Laundry Systems LLC – DO NOT COPY or TRANSMIT

Upper Back Panel (Drawing 2 of 4)

18 and 25 Pound Models with A or M in the 8th or 9th Position of the Model Number

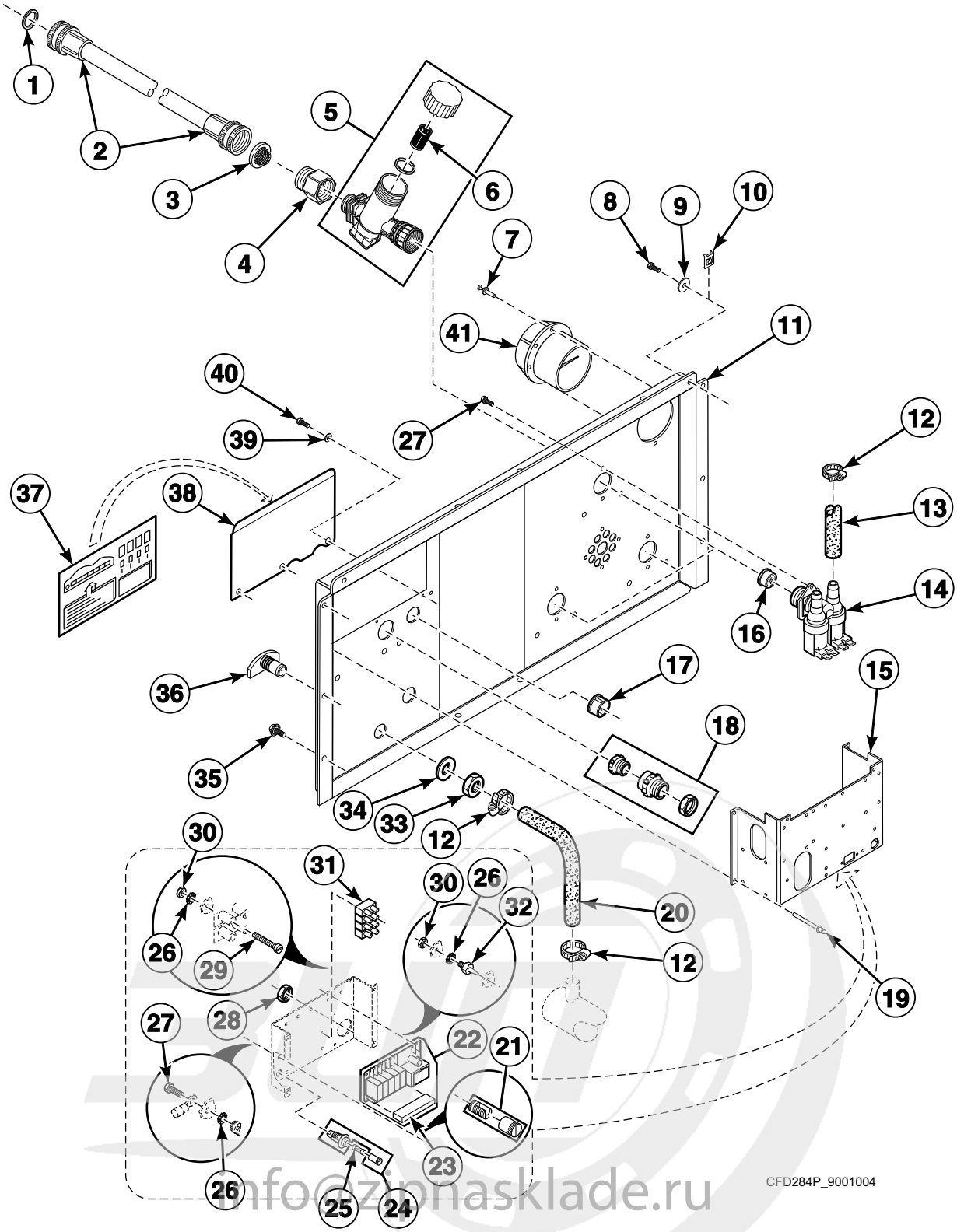

info@zipnasklade.ru
8(800)500-69-51

© Copyright, Alliance Laundry Systems LLC – DO NOT COPY or TRANSMIT

Upper Back Panel (Drawing 2 of 4)

REF	PART NO.	DESCRIPTION	COMMENTS
1	20290	Washer	
2	F200164	Water Hose	Standard thread
	F200166	Water Hose	Metric thread
3	803615	Washer	
4	9001990	Water Valve Adapter	Converts from metric to standard thread
5	209/00385/00	Filter	
6	209/00385/01	Filter	
7	9001953	Rivet	
8	9001343	Screw	
9	9001213	Washer	
10	9001344	Nut	
11	9001081	Backbridge	
12	F200205	Hose Clamp	No. 10
13	9001499	Water Hose	
14	B12519501	2-Way Inlet Valve	Standard thread; 3 used; Includes item 12; G581P3 Repair Kit
	9001747	Inlet Valve	Metric thread; 3 used; Includes item 12
15	N/A	Electrical Connection Plate	
16	F200052400	Inlet Valve Restrictor	Cold water valve
	223/00390/00	Flow Restrictor	Hot water valve
17	9001421	Plug	
18	9001434	Cordlock	
19	9001346	Rivet	
20	9001498	Water Hose	
21	9001350	Ground Terminal	
22	9001366	Soap Injection PCB with Fuse	Includes item 23
23	9001888	Connector	
24	9001364	Fuse Holder	
25	9001384	Fuse	
26	9001243	Washer	
27	9001292	Bolt	
28	9001539	Grommet	
29	9001329	Screw	
30	9001252	Nut	
31	9001354	Terminal Block	
32	9001429	Standoff	
33	9001270	Nut	
34	9001209	Washer	
35	9001310	Bolt	
36	9001487	Prewash and Mainwash Nozzle	
37	9001594	Electrical Connection Sticker	
38	9001040	Electrical Connection Plate	
39	9001229	Washer	
40	9001291	Bolt	
41	9001510	Hose Vent	

N/A = Part no longer available

info@zipnasklade.ru
8(800)500-69-51

© Copyright, Alliance Laundry Systems LLC – DO NOT COPY or TRANSMIT

Upper Back Panel (Drawing 3 of 4)

35 Pound Models with A or M in the 8th or 9th Position of the Model Number

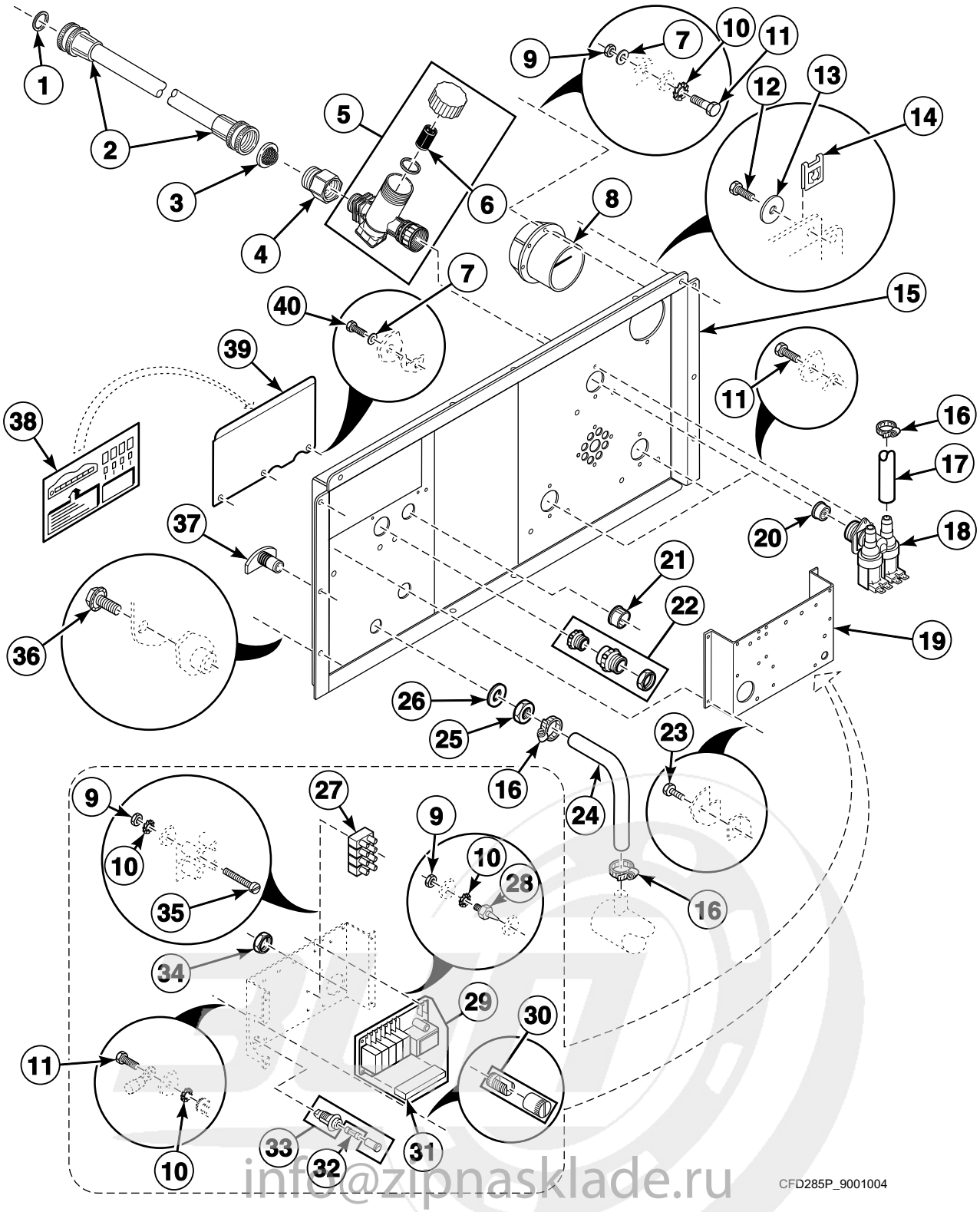

info@zipnasklade.ru
8(800)500-69-51

© Copyright, Alliance Laundry Systems LLC – DO NOT COPY or TRANSMIT

Upper Back Panel (Drawing 3 of 4)

REF	PART NO.	DESCRIPTION	COMMENTS
1	20290	Washer	
2	F200164	Water Hose	Standard thread
	F200166	Water Hose	Metric thread
3	803615	Washer	
4	9001990	Water Valve Adapter	Converts from metric to standard thread
5	209/00385/00	Filter	
6	209/00385/01	Filter	
7	9001229	Washer	
8	9001510	Hose Vent	
9	9001252	Nut	
10	9001243	Washer	
11	9001292	Bolt	
12	9001984	Screw	
13	9001213	Washer	
14	9001344	Nut	
15	9002061	Backbridge	
16	F200205	Hose Clamp	No. 10
17	9001499	Water Hose	
18	B12519501	2-Way Inlet Valve	Standard thread; 3 used; Includes item 16; G581P3 Repair Kit
	9001747	Inlet Valve	Metric thread; 3 used; Includes item 16
19	9001040	Electrical Connection Plate	
20	F200052400	Inlet Valve Restrictor	Cold water valve
	223/00390/00	Flow Restrictor	Hot water valve
21	9001421	Plug	
22	9001434	Cordlock	
23	9001346	Rivet	
24	9001498	Water Hose	
25	9001270	Nut	
26	9001209	Washer	
27	9001354	Terminal Block	
28	9001429	Standoff	
29	9001366	Soap Injection PCB with Fuse	Includes item 31
	M413867	Fuse	
30	9001350	Ground Terminal	
31	9001888	Connector	
32	9001384	Fuse	
33	9001364	Fuse Holder	
34	9001539	Grommet	
35	9001329	Screw	
36	9001310	Bolt	
37	9001487	Prewash and Mainwash Nozzle	
38	9001594	Electrical Connection Sticker	
39	9001040	Electrical Connection Plate	
40	9001291	Bolt	

info@zipnasklade.ru
8(800)500-69-51

© Copyright, Alliance Laundry Systems LLC – DO NOT COPY or TRANSMIT

Upper Back Panel (Drawing 4 of 4)

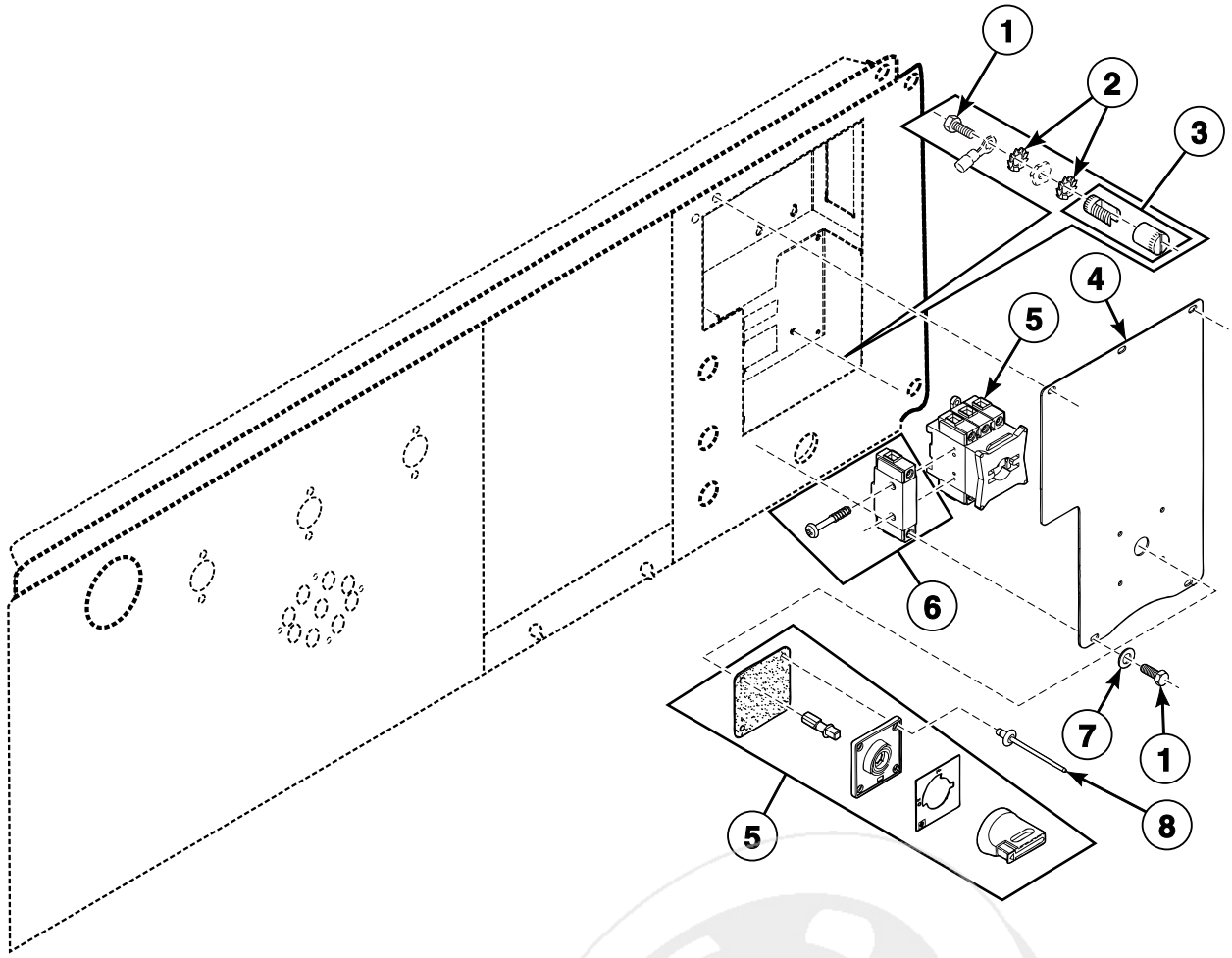

CFD350P_9001004

info@zipnasklade.ru
8(800)500-69-51

© Copyright, Alliance Laundry Systems LLC – DO NOT COPY or TRANSMIT

Upper Back Panel (Drawing 4 of 4)

REF	PART NO.	DESCRIPTION	COMMENTS
1	9001292	Bolt	
2	9001243	Washer	
3	9001350	Ground Terminal	
4	9002088	Main Switch Cover	
5	9001390	Main Switch	Standard and steam heat
	9002089	Main Switch	Electric heat; 40 A
	9001387	Main Switch	Electric heat; 80 A
6	9001391	Neutral Terminal Block	25 A VZ-11
	9001388	Neutral Terminal Block	63/80 A VZ-12
7	9001229	Washer	
8	9001346	Rivet	

info@zipnasklade.ru
8(800)500-69-51

© Copyright, Alliance Laundry Systems LLC – DO NOT COPY or TRANSMIT

AC Drive Panel (Drawing 1 of 3)

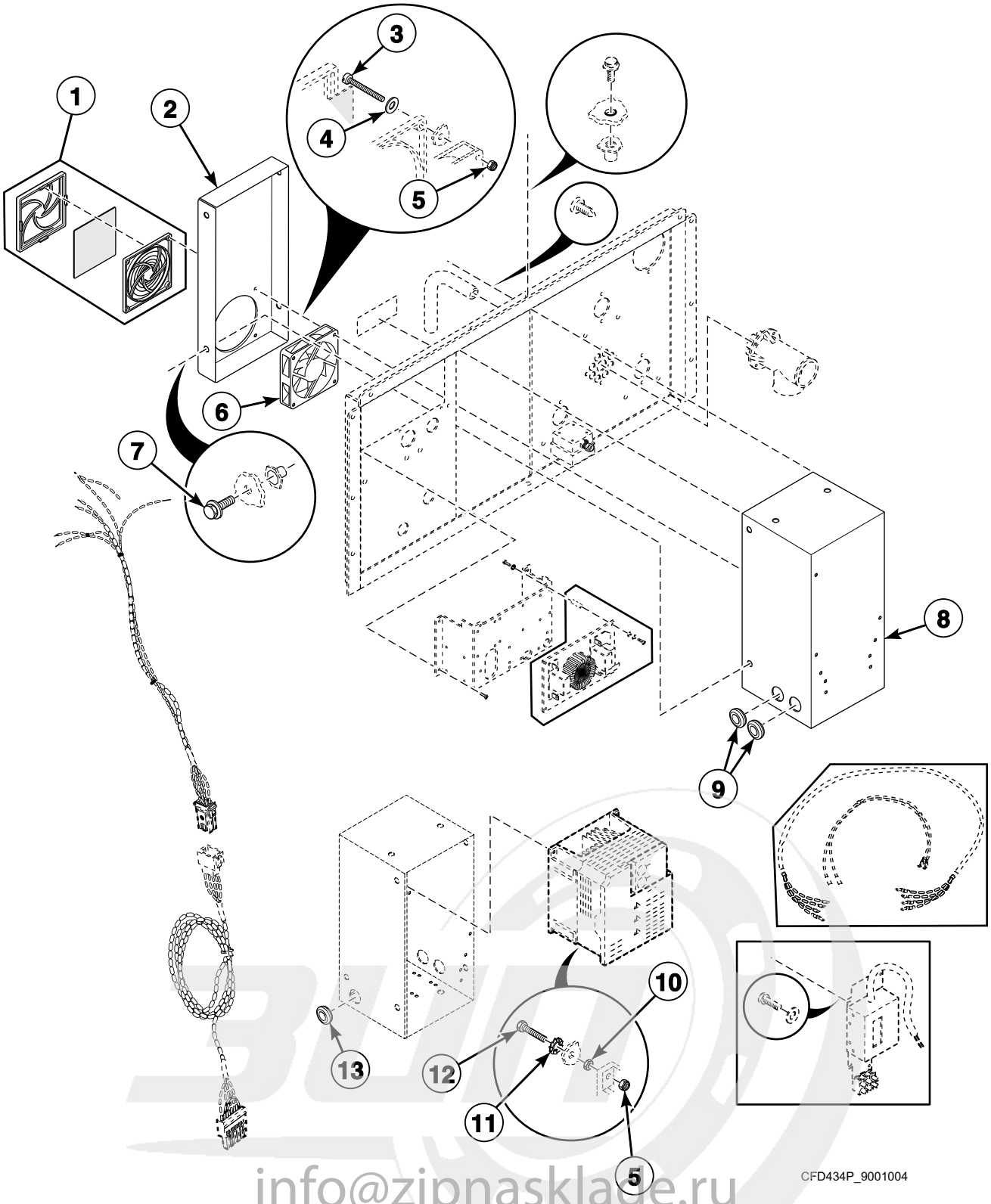

info@zipnasklade.ru
8(800)500-69-51

© Copyright, Alliance Laundry Systems LLC – DO NOT COPY or TRANSMIT

AC Drive Panel (Drawing 1 of 3)

REF	PART NO.	DESCRIPTION	COMMENTS
	9001011	Parameter Unit Assembly	Hand held; Includes 9001011 Parameter Unit Assembly and 9001895 Parameter Unit Program Cable
	F8410901	Parameter Unit Assembly	Mounts to inverter drive; Use with 500-series drives
1	9001383	Fan Grill	18 and 25 pound models; Models through 10/5/08
	9001382	Motor and Inverter Fan	18 and 25 pound models; Models starting 10/6/08
	9001376	Fan Grill	35 pound models; Models through 10/5/08
	209/00287/11	AC Drive Filter	35 pound models; Models starting 10/6/08
2	111/10425/11	Inverter Box Cover	18 and 25 pound models; Models that have been converted from 500-series to 700-series inverter drive
	F200169500	AC Drive Cover	18 and 25 pound models; All other applications
	F200169600	AC Drive Cover	35 pound models
3	9001338	Screw	
4	9001229	Washer	
5	9001267	Nut	
6	9001382	Motor and Inverter Fan	18 and 25 pound models
	9001375	Cooling Fan	35 pound models
7	9001310	Bolt	
8	9001079	Inverter Drive Box	18 and 25 pound models; FR-E520 and FR-E540 series inverter drive
	111/10425/50	Inverter Drive Box	18 and 25 pound models; FR-D720 and FR-D740 series inverter drive
	9001695	Inverter Drive Box	35 pound models
9	9001530	Grommet	
10	9001252	Nut	
11	9001243	Washer	
12	9001309	Bolt	
13	9001530	Grommet	

info@zipnasklade.ru
8(800)500-69-51

© Copyright, Alliance Laundry Systems LLC – DO NOT COPY or TRANSMIT

AC Drive Panel (Drawing 2 of 3)

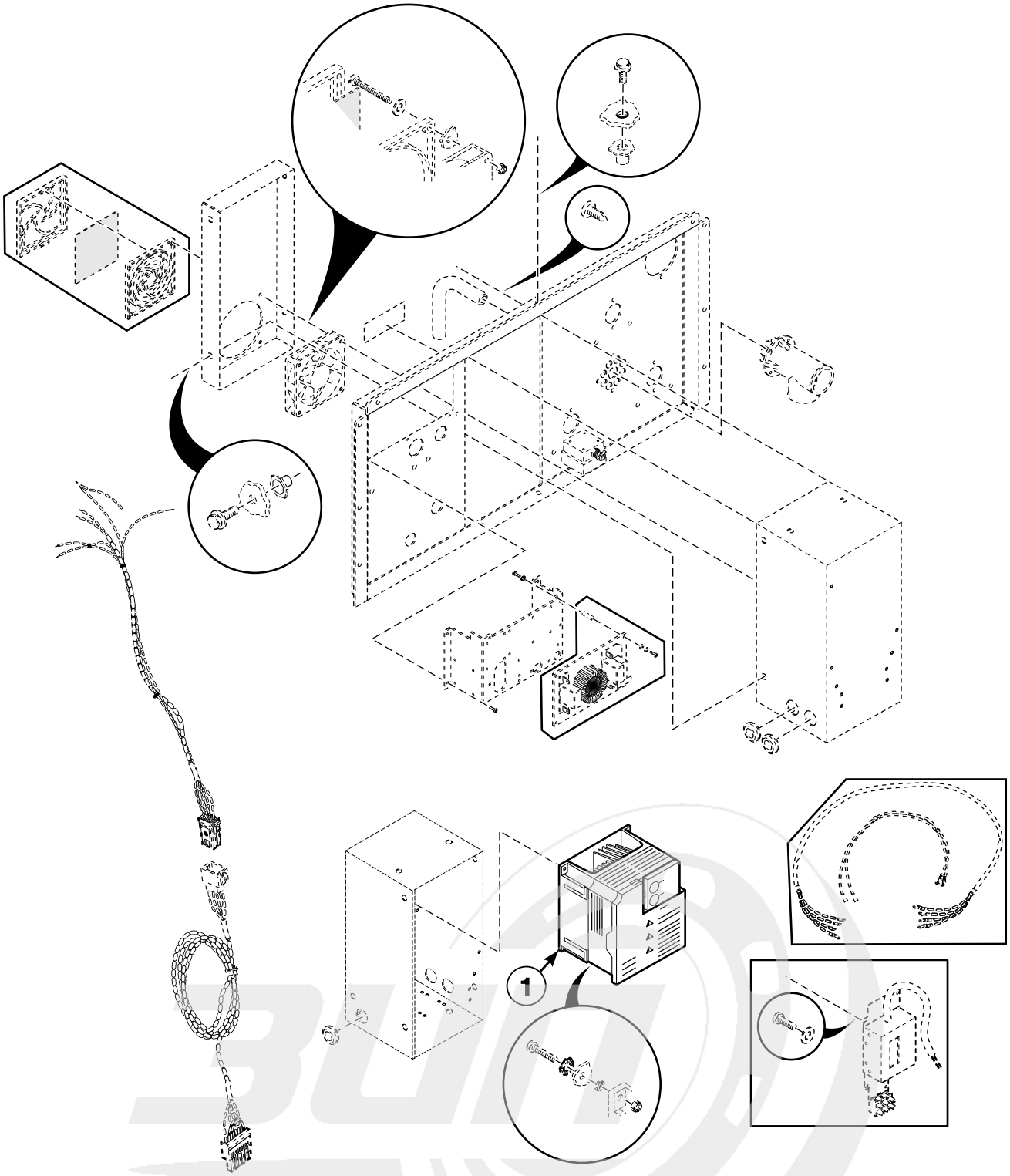

info@zipnasklade.ru
8(800)500-69-51

© Copyright, Alliance Laundry Systems LLC – DO NOT COPY or TRANSMIT

AC Drive Panel (Drawing 2 of 3)

REF	PART NO.	DESCRIPTION	COMMENTS
1	227/00236/00	Inverter Drive	18 and 25 pound models; FR-E540 series; 3 x 400 Volt
	227/00228/00	Inverter Drive	18 and 25 pound models; FR-E520 series; 1 x 230 Volt
	9001892	Inverter Drive	35 pound models; FR-E540 series; 3 x 400 Volt
	227/00229/00	Inverter Drive	35 pound models; FR-E520 series; 1 x 230 Volt
	F8420905	Inverter Drive	700-series; 18 pound design 7 models with P, Q or X in the 7th or 8th position of the model number
	F8420704	Inverter Drive	700-series; 18 pound design 6 models with P, Q or X in the 7th position of the model number
	F8420906	Inverter Drive	700-series; Models UX018PVNA7 and UX18PVNA7
	F8420705	Inverter Drive	700-series; Models UX18PVNA6 and UX18PVNU6
	F8420907	Inverter Drive	700-series; 25 pound design 7 models with P, Q or X in the 7th or 8th position of the model number
	F8420706	Inverter Drive	700-series; 25 pound design 6 models with P, Q or X in the 7th position of the model number
	F8420908	Inverter Drive	700-series; Models UX025PVNA7 and UX25PVNA7
	F8420707	Inverter Drive	700-series; Models UX25PVNA6 and UX25PVNU6
	F8420911	Inverter Drive	700-series; 35 pound design 7 models with P, Q or X in the 7th or 8th position of the model number
	F8420710	Inverter Drive	700-series; 35 pound design 6 models with P, Q or X in the 7th position of the model number
	F8420912	Inverter Drive	700-series; Models SX035PVNM7, SX35PVNM7, UX035PVNA7 and UX35PVNA7
	F8420711	Inverter Drive	700-series; Models UX35PVNA6 and UX35PVNU6
	F8420805	Inverter Drive Kit	Used to convert 500-series to 700-series inverter drive; 18 pound design 7 models with P, Q or X in the 7th or 8th position of the model number
	F8420604	Inverter Drive Kit	Used to convert 500-series to 700-series inverter drive; 18 pound design 6 models with P, Q or X in the 7th position of the model number
	F8420806	Inverter Drive Kit	Used to convert 500-series to 700-series inverter drive; Models UX018PVNA7 and UX18PVNA7
	F8420605	Inverter Drive Kit	Used to convert 500-series to 700-series inverter drive; Models UX18PVNA6 and UX18PVNU6
	F8420807	Inverter Drive Kit	Used to convert 500-series to 700-series inverter drive; 25 pound design 7 models with P, Q or X in the 7th or 8th position of the model number
	F8420606	Inverter Drive Kit	Used to convert 500-series to 700-series inverter drive; 25 pound design 6 models with P, Q or X in the 7th position of the model number
	F8420808	Inverter Drive Kit	Used to convert 500-series to 700-series inverter drive; Models UX025PVNA7 and UX25PVNA7
	F8420607	Inverter Drive Kit	Used to convert 500-series to 700-series inverter drive; Models UX25PVNA6 and UX25PVNU6
	F8420811	Inverter Drive Kit	Used to convert 500-series to 700-series inverter drive; 35 pound design 7 models with P, Q or X in the 7th or 8th position of the model number
	F8420610	Inverter Drive Kit	Used to convert 500-series to 700-series inverter drive; 35 pound design 6 models with P, Q or X in the 7th position of the model number
	F8420812	Inverter Drive Kit	Used to convert 500-series to 700-series inverter drive; Models SX035PVNM7, SX35PVNM7, UX035PVNA7 and UX35PVNA7
	F8420611	Inverter Drive Kit	Used to convert 500-series to 700-series inverter drive; Models UX35PVNA6 and UX35PVNU6
	227/00125/05	Inverter Fan	35 pound models; FR-D520 and FR-D540 series

info@zipbaskade.ru
8(800)500-6951

© Copyright, Alliance Laundry Systems LLC – DO NOT COPY or TRANSMIT

AC Drive Panel (Drawing 3 of 3)

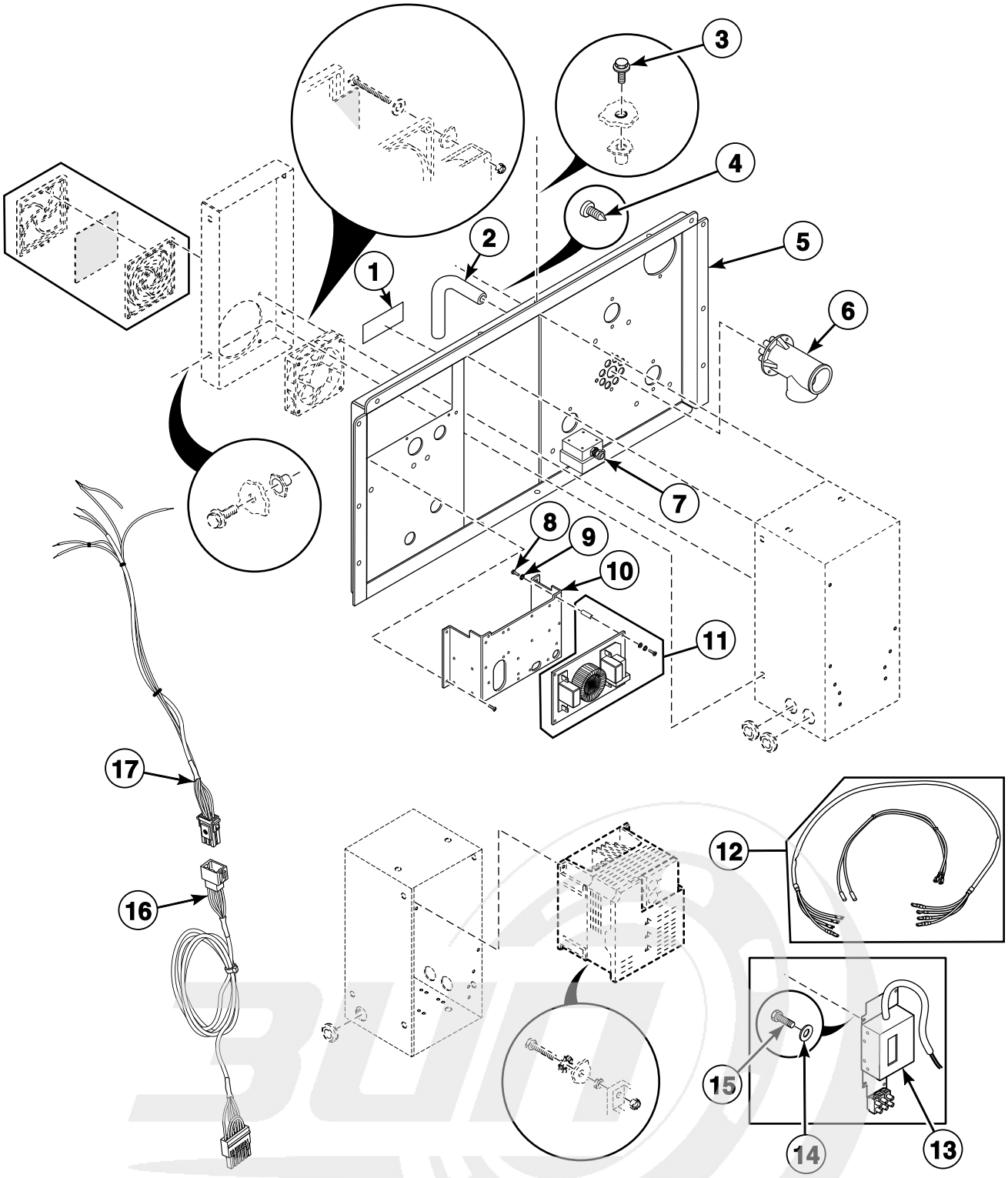

info@zipnasklade.ru
8(800)500-69-51

© Copyright, Alliance Laundry Systems LLC – DO NOT COPY or TRANSMIT

AC Drive Panel (Drawing 3 of 3)

REF	PART NO.	DESCRIPTION	COMMENTS
	9001011	Parameter Unit Assembly	Includes 9001011 Parameter Unit Assembly and 9001895 Parameter Unit Program Cable
1	B12355001	Voltage Discharge Decal	
2	9001531	Pressure Hose	
3	9001310	Bolt	
4	208/00130/00	Screw	
5	9001081	Backbridge	18 and 25 pound models
	9001063	Backbridge	35 pound models
6	9001551	Liquid Soap Manifold	
7	9001986	Transformer	Models SX035PVNM7, SX35PVNM7, UX018PVNA7, UX025PVNA7, UX035PVNA7, UX18PVNA6, UX18PVNA7, UX18PVNU6, UX25PVNA6, UX25PVNA7, UX25PVNU6, UX35PVNA6, UX35PVNA7 and UX35PVNU6
8	9001292	Bolt	
9	9001243	Washer	
10	9001902	Electrical Connection Plate	
11	9001896	Filter	25 pound models; Models starting 11/03 through 3/09
	210/00027/UL00	Filter	18 and 25 pound models
	B12339401	Noise Filter	35 pound models
12	9002076	Motor and Fan Harness	18 and 25 pound models
	9002077	Motor and Fan Harness	35 pound models
13	9001592	Noise Filter	18 and 25 pound models; Models through 1/7/04
	9001593	Noise Filter	35 pound models
14	9001243	Washer	
15	9001323	Screw	
16	9001905	Micro to Connector Harness	Board to connector harness; Requires inverter drive jumper to be in the “source” position
17	9001904	Connector to Inverter Harness	Inverter drive to connector harness

info@zipnasklade.ru
8(800)500-69-51

© Copyright, Alliance Laundry Systems LLC – DO NOT COPY or TRANSMIT

Balance Switch (Drawing 1 of 3)

Models HX18PVQU6, HX18PVXU6, HX25PVQU6, HX25PVXU6, SX18PVQU6, SX18PVXU6, SX25PVQU6, SX25PVXU6, UX18PVNU6, UX18PVPU6, UX18PVQU6, UX18PVXU6, UX25PVNU6, UX25PVPU6, UX25PVQU6 and UX25PVXU6

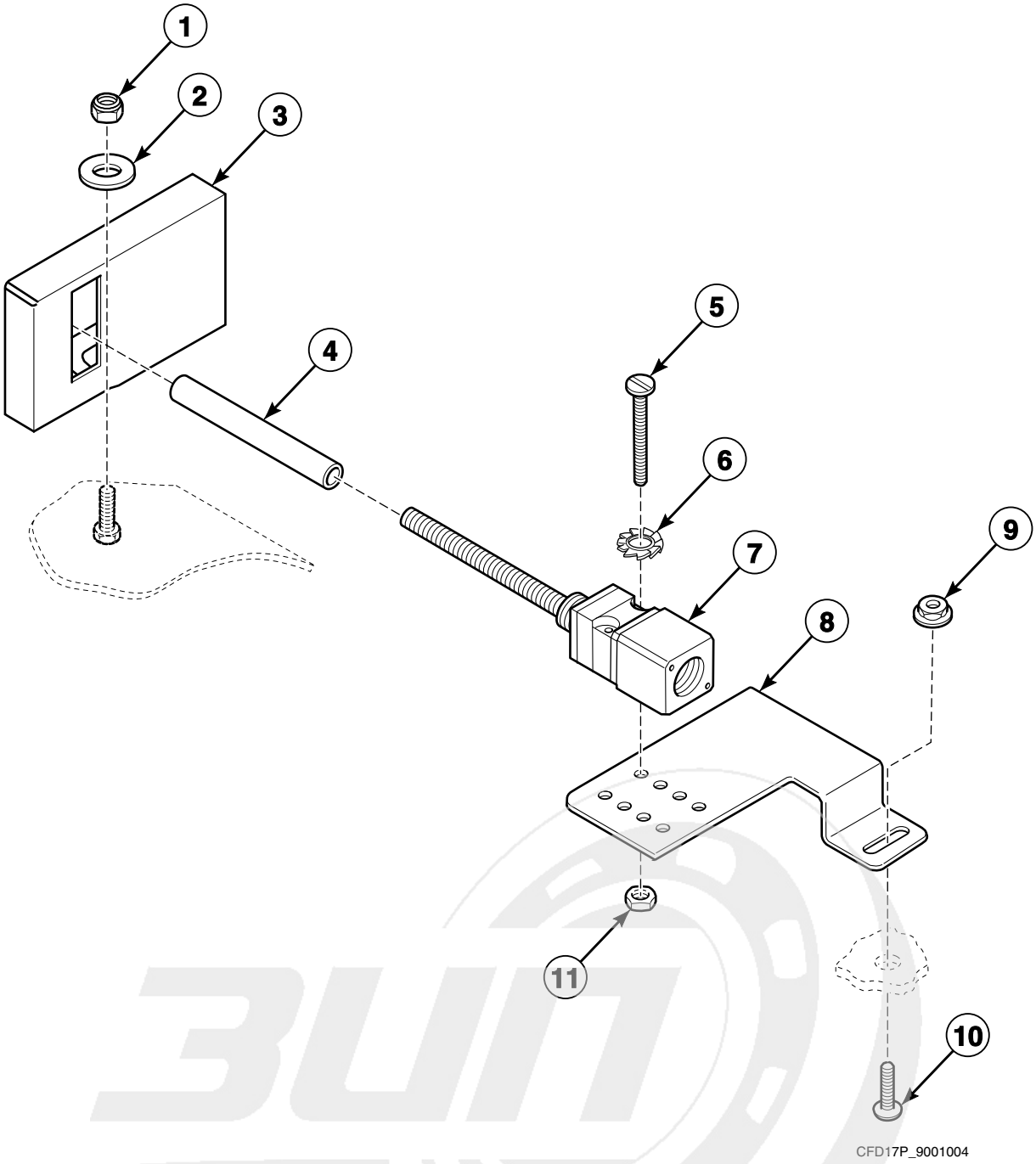

info@zipnasklade.ru
8(800)500-69-51

© Copyright, Alliance Laundry Systems LLC – DO NOT COPY or TRANSMIT

Balance Switch (Drawing 1 of 3)

REF	PART NO.	DESCRIPTION	COMMENTS
1	9001263	Nut	
2	9001216	Washer	
3	9001043	Tilt Detector Plate	
4	9001766	Out-of-Balance Switch Boot	
5	9001325	Screw	
6	9001243	Washer	
7	9001369	Out-of-Balance Switch	
8	9001065	Out-of-Balance Switch Bracket	
9	9001311	Nut	
10	9001663	Screw	
11	9001252	Nut	

info@zipnasklade.ru
8(800)500-69-51

© Copyright, Alliance Laundry Systems LLC – DO NOT COPY or TRANSMIT

Balance Switch (Drawing 2 of 3)

Models HX35PVQU6, HX35PVXU6, SX35PVQU6, SX35PVXU6, UX35PVNU6, UX35PVPU6, UX35PVQU6 and UX35PVXU6

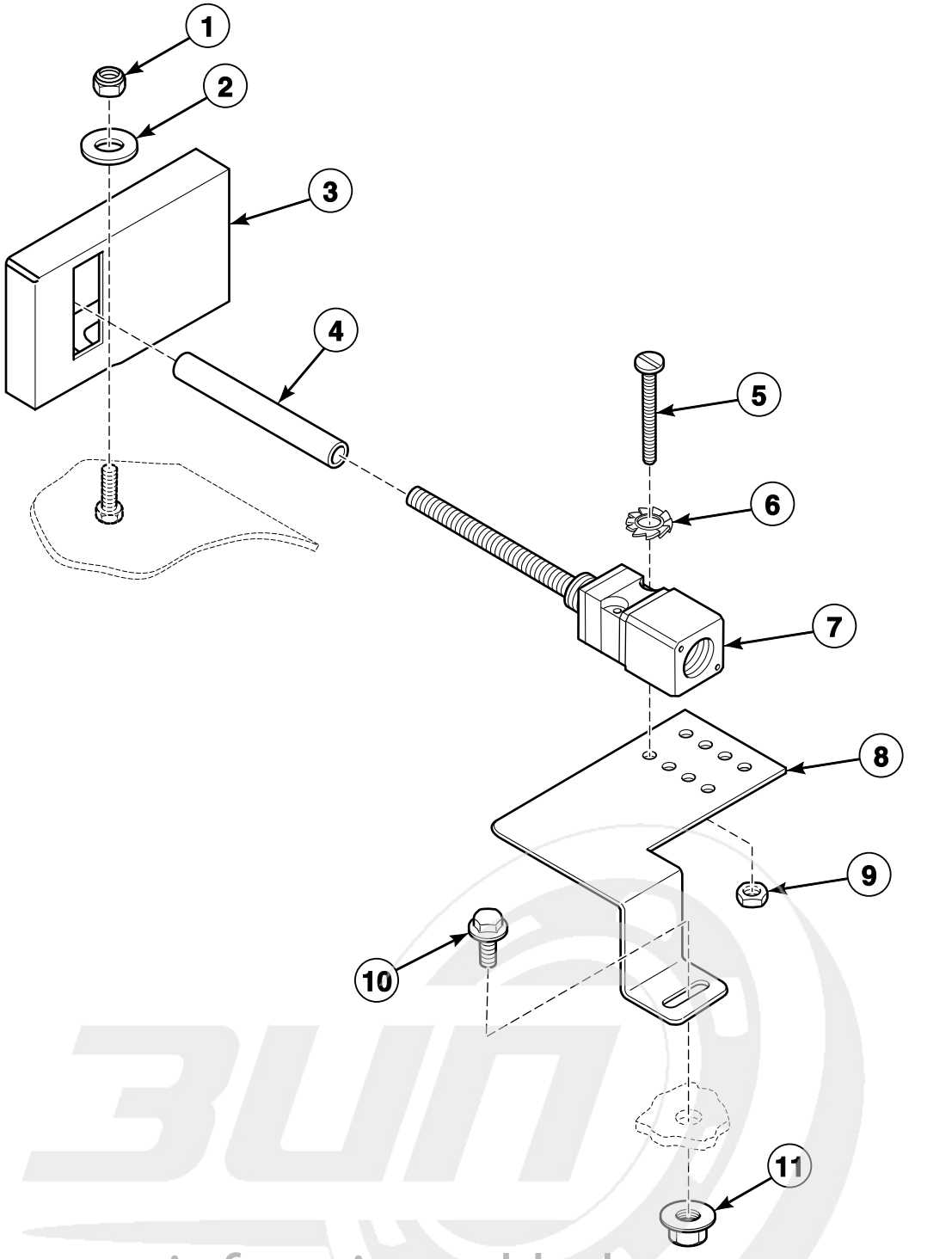

info@zipnasklade.ru
8(800)500-69-51

© Copyright, Alliance Laundry Systems LLC – DO NOT COPY or TRANSMIT

Balance Switch (Drawing 2 of 3)

REF	PART NO.	DESCRIPTION	COMMENTS
1	9001263	Nut	
2	9001216	Washer	
3	9001043	Tilt Detector Plate	
4	9001766	Out-of-Balance Switch Boot	
5	9001325	Screw	
6	9001243	Washer	
7	9001369	Out-of-Balance Switch	
8	9001042	Tilt Switch Bracket	
9	9001252	Nut	
10	9001663	Screw	
11	9001311	Nut	

info@zipnasklade.ru
8(800)500-69-51

© Copyright, Alliance Laundry Systems LLC – DO NOT COPY or TRANSMIT

Balance Switch (Drawing 3 of 3)

All Models Except HX18PVQU6, HX18PVXU6, HX25PVQU6, HX25PVXU6, HX35PVQU6, HX35PVXU6, SX18PVQU6, SX18PVXU6, SX25PVQU6, SX25PVXU6, SX35PVQU6, SX35PVXU6, UX18PVNU6, UX18PVPU6, UX18PVQU6, UX18PVXU6, UX25PVNU6, UX25PVPU6, UX25PVQU6, UX25PVXU6, UX35PVNU6, UX35PVPU6, UX35PVQU6 and UX35PVXU6

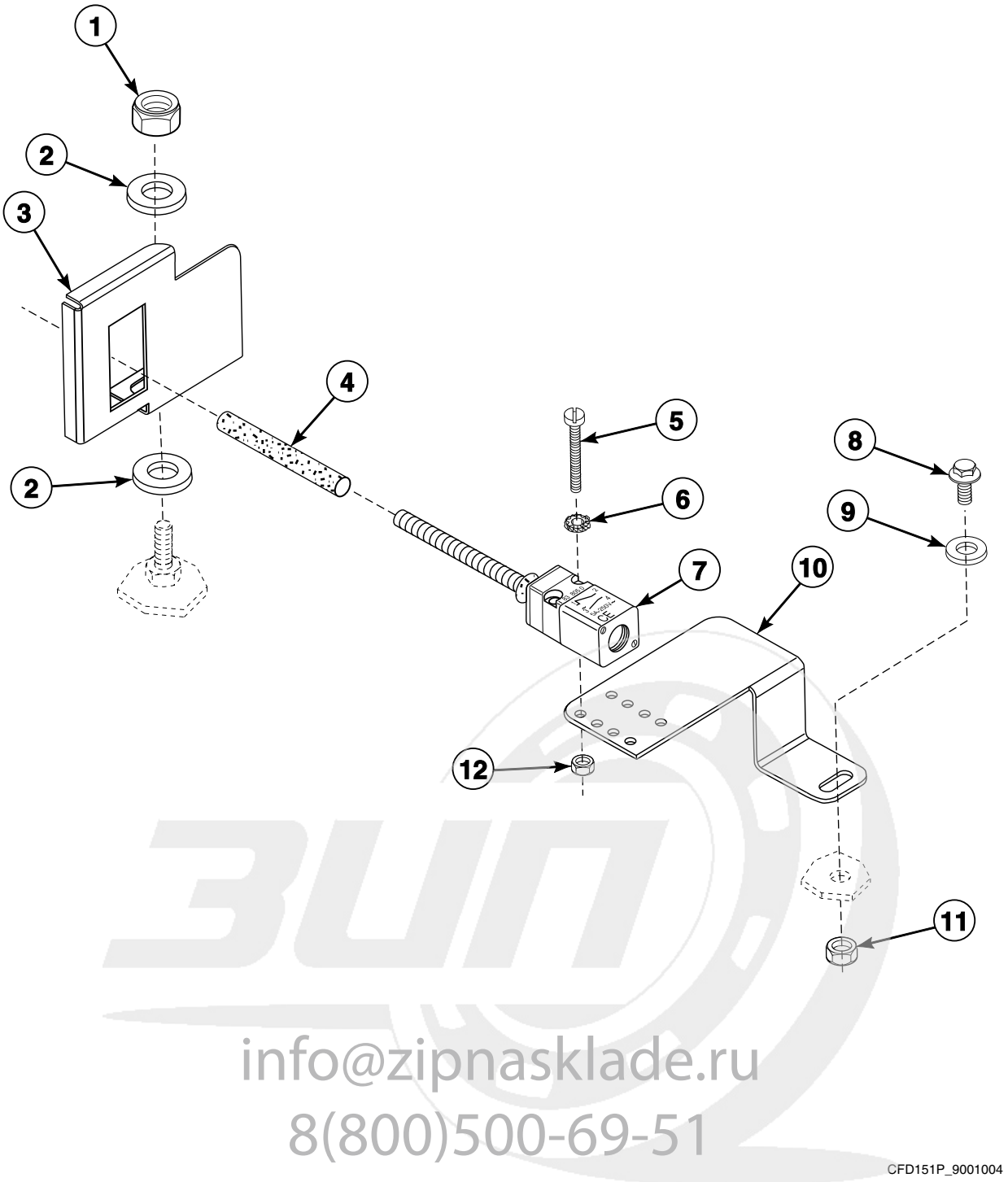

info@zipnasklade.ru
8(800)500-69-51

© Copyright, Alliance Laundry Systems LLC – DO NOT COPY or TRANSMIT

Balance Switch (Drawing 3 of 3)

REF	PART NO.	DESCRIPTION	COMMENTS
1	9001263	Nut	
2	9001216	Washer	
3	9001917	Tilt Detector Plate	
4	9001766	Out-of-Balance Switch Boot	
5	9001325	Screw	
6	9001243	Washer	
7	9001369	Out-of-Balance Switch	
8	9001310	Bolt	
9	9001213	Washer	
10	9001964	Tilt Switch Support	Right
	9001965	Tilt Switch Support	Left
11	9001250	Nut	
12	9001252	Nut	

info@zipnasklade.ru
8(800)500-69-51

© Copyright, Alliance Laundry Systems LLC – DO NOT COPY or TRANSMIT

Supply Dispenser

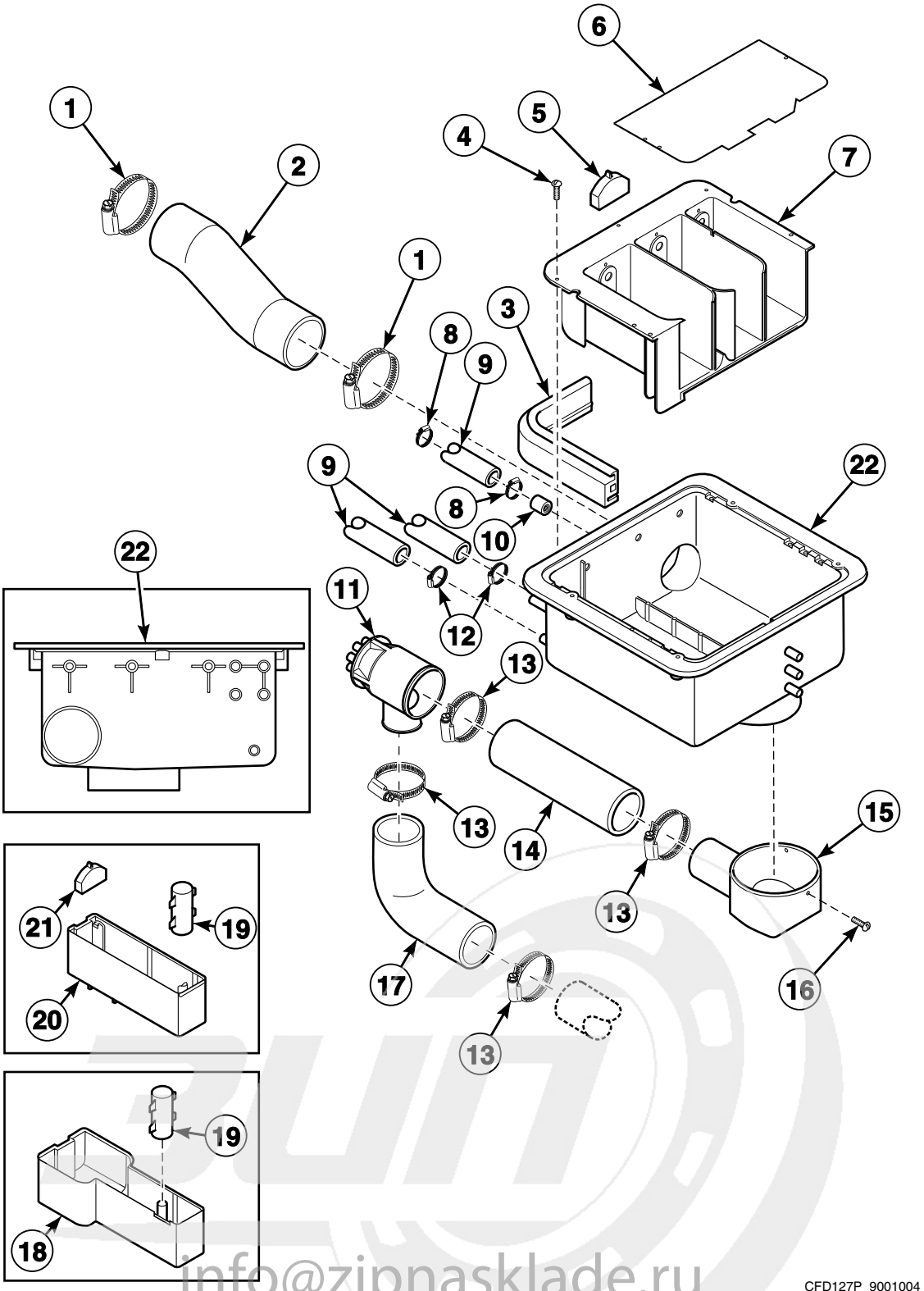

info@zipnasklade.ru
8(800)500-69-51

© Copyright, Alliance Laundry Systems LLC – DO NOT COPY or TRANSMIT

Supply Dispenser

REF	PART NO.	DESCRIPTION	COMMENTS
1	9001495	Hose Clamp	
2	9001519	Vent Hose	
3	9001522	Soap Dispenser Gasket	
4	B12347501	Screw	
5	9001509	Soap Spray Nozzle	
6	F200047800	Supply Deflector	
7	223/00102/30	Soap Dispenser Assembly	
8	36801	Hose Clamp	No. 8
9	9001499	Water Hose	
10	F060334200P	Restrictor Assembly	
11	9001551	Liquid Soap Manifold	
12	F200205	Hose Clamp	No. 10
13	9001494	Hose Clamp	
14	9001664	Siphon Break Dispenser Hose	18 and 25 pound models
	9001666	Siphon Break Dispenser Hose	35 pound models
15	9001537	Dispenser Drain Funnel	18 and 25 pound models
	9001538	Dispenser Drain Funnel	35 pound models
16	B12350903	Screw	
17	9001665	Siphon Break Hose	18 and 25 pound models
	9001667	Siphon Break Hose	35 pound models
18	9001511	Liquid Soap Dispenser Insert	
19	9001507	Soap Dispenser Rinse Siphon	
20	9001506	Rinse Insert	
21	9001508	Softener Spray Nozzle	
22	223/00102/30	Soap Dispenser Assembly	

info@zipnasklade.ru
8(800)500-69-51

© Copyright, Alliance Laundry Systems LLC – DO NOT COPY or TRANSMIT

Electric Heating Option

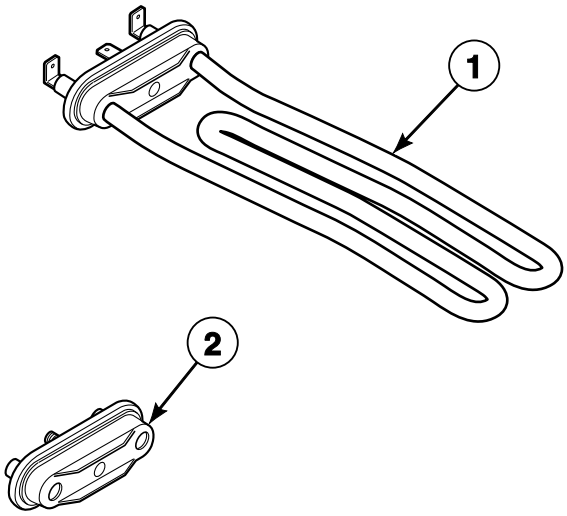

CFD533P_9001004

info@zipnasklade.ru
8(800)500-69-51

© Copyright, Alliance Laundry Systems LLC – DO NOT COPY or TRANSMIT

Electric Heating Option

REF	PART NO.	DESCRIPTION	COMMENTS
1	209/00562/20	Heating Element	3000 W
2	F360202	Heating Element Plug	

info@zipnasklade.ru
8(800)500-69-51

© Copyright, Alliance Laundry Systems LLC – DO NOT COPY or TRANSMIT

Steam Heating Option - *X35 Models

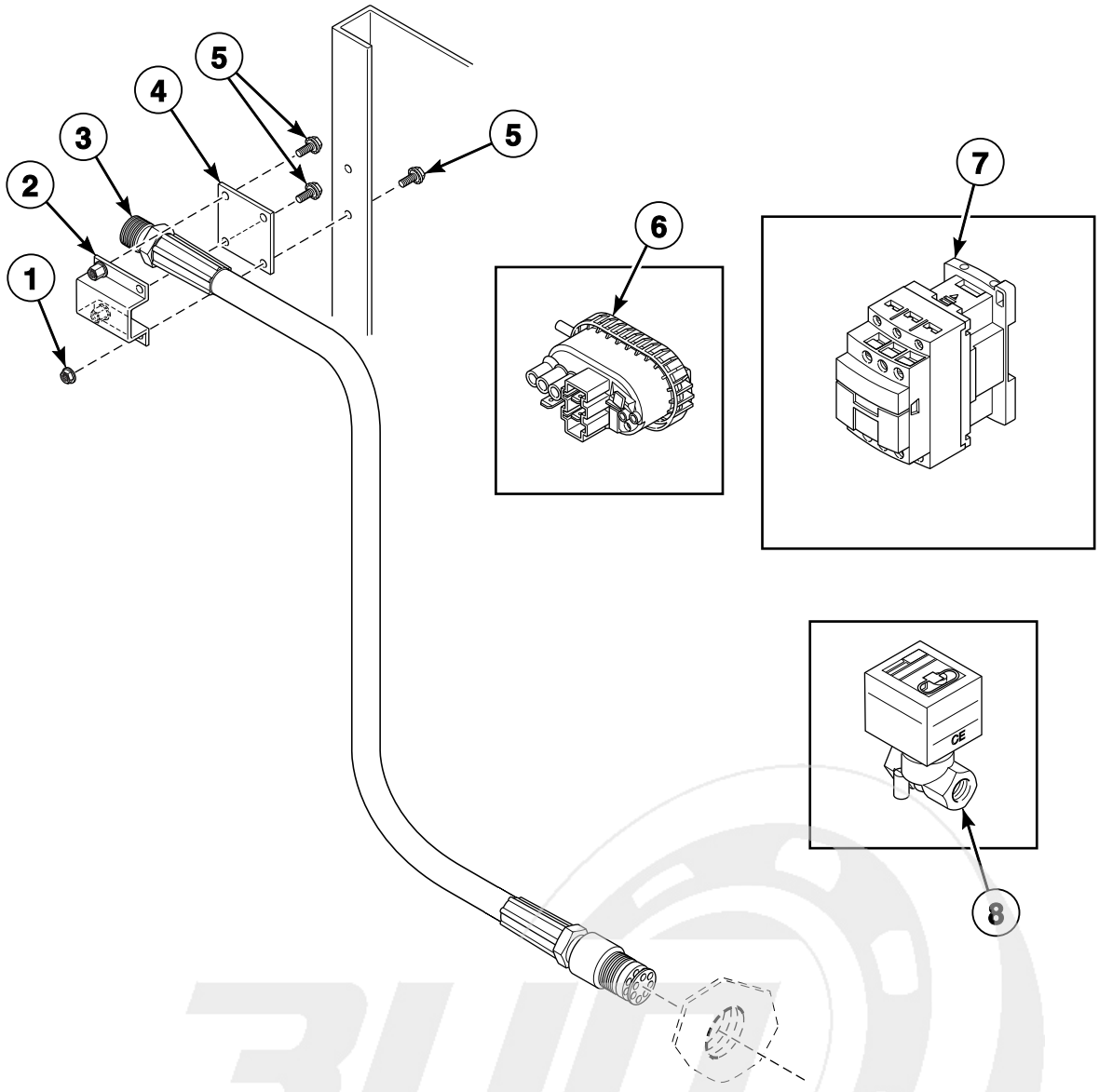

CFD534P_9001004

info@zipnasklade.ru
8(800)500-69-51

© Copyright, Alliance Laundry Systems LLC – DO NOT COPY or TRANSMIT

Steam Heating Option - *X35 Models

REF	PART NO.	DESCRIPTION	COMMENTS
	924P3	Steam Heat Kit	Includes items 1-8, 209/00737/00 Connector, F140329 Strain Relief Connector and F140609 DIN Connector
	209/00737/00	Connector	
	F140329	Strain Relief Connector	
	F140609P	DIN Connector	
1	9001311	Nut	
2	111/00155/00	Steam Bracket	
3	217/00063/00	Steam Hose	
4	111/00155/10	Bracket Support	
5	9001310	Bolt	
6	900/00108/00	Safety Level Switch	
7	901/00217/00	Contactor and Wiring Assembly	
8	9001386	Steam Valve	

info@zipnasklade.ru
8(800)500-69-51

© Copyright, Alliance Laundry Systems LLC – DO NOT COPY or TRANSMIT

Notes

info@zipnasklade.ru
8(800)500-69-51

© Copyright, Alliance Laundry Systems LLC – DO NOT COPY or TRANSMIT

Parts Index

A

AC Drive Cover
- F200169500 81
- F200169600 81

AC Drive Filter
- 209/00287/11 81

B

Back Panel
- 9001153 ..... 69, 71

Backbridge
- 9001063 ..... 65, 73, 85
- 9001081 ..... 65, 67, 73, 75, 85
- 9002061 ..... 67, 77

Ball Bearing
- 215/00001/12 23
- 215/00001/13 ..... 23, 25, 27
- 9001438 ..... 25, 27
- 9001457 23

Basket and Shaft Assembly
- B12379701 21
- B12379801 21
- B12379901 21
- B12380001 21
- B12380501 21
- B12380601 21

Basket Kit
- B12542701 21
- B12542801 21
- B12542901 21

Bearing
- F100134 ..... 25, 27
- F100137P 23, 25, 27

Bearing Housing Assembly
- 152/10117/01 ..... 25, 27
- 152/10118/01 ..... 25, 27
- 9001028 23
- 9001031 23

Bearing Kit
- 3881P 27
- 3882P 27
- 889P3 23

Bearing Replacement Kit
- 387P4 25
- 388P4 25
- 890P3 23

Bearing Replacement Tool Kit
- 380P4 27
- 381P3 27
- 383P4 ..... 23, 25
- 384P4 ..... 23, 25

Bearing Retainer Ring
- 9001036 ..... 65, 67

Bearing Spacer
- 217/00100/00 ..... 23, 25, 27, 31
- 9001980 ..... 23, 25, 27, 31

Belt
- 9001929 ..... 31, 37
- 9001981 ..... 31, 37

Belt Adjusting Rod
- 9001098 ..... 33, 35

Bolt
- 206/00032/00 ..... 17, 19, 21
- 206/00052/00 13
- 9001272 ..... 23, 25, 27
- 9001273 47
- 9001274 ..... 23, 25, 27, 51, 53, 55, 65, 67
- 9001276 ..... 65, 67
- 9001283 29
- 9001284 29
- 9001285 ..... 31, 33, 35
- 9001287 47
- 9001291 ..... 9, 73, 75, 77
- 9001292 ..... 65, 73, 75, 77, 79, 85
- 9001295 ..... 41, 43, 45
- 9001301 ..... 33, 37
- 9001304 9
- 9001309 81
- 9001310 ..... 37, 39, 61, 63, 65, 67, 69, 71, 73, 75, 77, 81, 85, 91, 97
- 9001316 ..... 33, 35
- 9001342 69

Bracket Support
- 111/00155/10 97

C

Caddy Bracket
- 9001559 ..... 23, 25, 27
- 9001560 ..... 23, 25, 27

Circuit Board Cover
- 229/00289/00 59

Connector
- 209/00737/00 97
- 9001888 ..... 73, 75, 77

Connector to Inverter Harness
- 9001904 85

Contact Block
- 44018701 59
- 44018901 59

Contactor
- 9001352 ..... 61, 63
- 9002066 ..... 61, 63

Contactor and Wiring Assembly
- 901/00217/00 97

Control Panel
- 9001049 ..... 59, 65
- 9001050 ..... 59, 65
- 9002043 67

Cooling Fan
- 9001375 81

Cordlock
- 9001427 35
- 9001432 33
- 9001433 ..... 37, 73
- 9001434 ..... 37, 73, 75, 77

Counter Ring
- 9001462 ..... 23, 25, 27, 29, 31
- 9001483 ..... 23, 25, 27, 29, 31

N/A items do not appear in index.

info@zipnasklade.ru
8(800)500-69-51

© Copyright, Alliance Laundry Systems LLC – DO NOT COPY or TRANSMIT

Counterweight
9001159 9
9001160 9

Crossbar
9001908 65
9001992 ..... 65, 67

Cylinder and Shaft Assembly
111/01917/00 ..... 19, 21

Cylinder and Trunnion Assembly
111/01954/00 17
111/01962/00 17
9001126 17

Cylinder Shaft Key
9001458 29
9001459 29

D

DIN Connector
F140609P 97

Dispenser Drain Funnel
9001537 93
9001538 93

Display
209/00580/03 59

Door Frame
118/00046/10 ..... 53, 55

Door Glass
217/00023/00 ..... 51, 53, 55

Door Glass Seal
9001466 ..... 51, 53, 55

Door Handle
217/00055/00 ..... 51, 53, 57
217/00065/00 55

Door Handle Catch
9001473 57

Door Handle Latch
9001474 57

Door Handle Stop
9001467 ..... 51, 53, 55

Door Hinge Assembly
9001465 ..... 51, 53, 55

Door Hinge Spacer
9001033 ..... 51, 53, 55
9001034 ..... 51, 53, 55

Door Lock Assembly
B12517701 49

Door Lock Harness
9001985 49

Door Lock Microswitch
9001371 49

Door Lock Pin and Pivot Block Kit
9001997 ..... 49, 51, 53, 55

Door Lock Solenoid
C000184P 49

Door Lock Spacer
9001477 49

Door Lock Spring
9001558 49

Door Release Wire
9001950 49

Drain Pipe
9001517 41
9001518 47
9001547 39
9001945 ..... 43, 45

Drain Valve
9001353 ..... 39, 41
9001355 47
9001361 47
9001934 43
9002083 45

Drain Valve Harness
900/00116/00 ..... 39, 41, 43, 45, 47

Drain Valve Hose
9001534 ..... 39, 41

Drain Valve Overflow Plug
9001503 ..... 39, 41, 47

Drain Valve Plate Assembly
9001099 47

Drain Valve to Drain Pipe Hose
9001526 47

Drain Valve to Pipe Hose
9002097 45

Drain Valve Vent Hose
9001535 ..... 39, 41, 43

Drum and Axle
B12326101 ..... 19, 21
B12326701 ..... 19, 21

E

Electrical Component Mounting Plate
9001958 63
9001959 63

Electrical Component Plate
9001047 61
9001052 61

Electrical Component Plate Extension
9001048 61

Electrical Connection Plate
9001040 ..... 73, 75, 77
9001051 73
9001902 85

Electrical Connection Sticker
9001594 ..... 73, 75, 77

Electrical Plate Assembly
9001039 61

Exhaust Valve Hose
223/00170/00 47

F

Fan Grill
9001376 81
9001383 81

Fastening Rubber
9001615 ..... 13, 15
9001616 ..... 13, 15

Filter
209/00385/00 ..... 73, 75, 77
209/00385/01 ..... 73, 75, 77
210/00027/UL00 85
9001896 85

info@zipnaskade.ru
8(800)500-6020

N/A items do not appear in index.

© Copyright, Alliance Laundry Systems LLC – DO NOT COPY or TRANSMIT

Flat Cable
9001417 59
Flow Restrictor
223/00390/00 ..... 73, 75, 77
Frame
9001149 9
9001151 9
9001689 9
9001915 11
9002053 11
9002070 11
Front Left Panel
9001077 65
Front Panel
111/01897/00 21
9001066 ..... 9, 51
9001688 9
9002037 19
9002050 19
Front Shell
9002038 ..... 19, 21
9002056 ..... 19, 21
Fuse
M413867 77
9001379 59
9001384 ..... 73, 75, 77
Fuse Holder
9001364 ..... 73, 75, 77

G

Gasket
9001608 ..... 65, 67
Grommet
9001530 ..... 61, 81
9001539 ..... 61, 73, 75, 77
Ground Terminal
9001350 ..... 73, 75, 77, 79
9001419 49

H

Heating Element
209/00562/20 95
Heating Element Plug
F360202 95
Hinge
9001485 ..... 51, 53, 55
Hose Barb
9001496 ..... 45, 61
Hose Clamp
F200205 ..... 43, 45, 73, 75, 77, 93
36801 93
9001492 ..... 45, 61
9001493 ..... 39, 41, 47
9001494 ..... 39, 41, 43, 45, 47, 93
9001495 ..... 39, 41, 43, 45, 93
9001502 47
Hose Vent
9001510 ..... 73, 75, 77

I

Inlet Valve
9001747 ..... 73, 75, 77
Inlet Valve Restrictor
F200052400 ..... 73, 75, 77
Inlet Valve, 2-Way
B12519501 ..... 73, 75, 77
Insulating Sticker
229/00255/00 59
Interlock Coil Spring
9001554 49
Interlock Lever
9001478 49
Inverter
227/00227/00 37
Inverter Box Cover
111/10425/11 81
Inverter Drive
F8420704 83
F8420705 83
F8420706 83
F8420707 83
F8420710 83
F8420711 83
F8420905 83
F8420906 83
F8420907 83
F8420908 83
F8420911 83
F8420912 83
227/00228/00 83
227/00229/00 83
227/00236/00 83
9001892 83
Inverter Drive Box
111/10425/50 81
9001079 81
9001695 81
Inverter Drive Kit
F8420604 83
F8420605 83
F8420606 83
F8420607 83
F8420610 83
F8420611 83
F8420805 83
F8420806 83
F8420807 83
F8420808 83
F8420811 83
F8420812 83
Inverter Fan
227/00125/05 83

K

Kickplate
9001083 65
9001693 ..... 65, 67
9002042 67

info@zipnasklade.ru
8(800)500-69-51

N/A items do not appear in index.

© Copyright, Alliance Laundry Systems LLC – DO NOT COPY or TRANSMIT

L

Left Front Panel
9001694 ..... 65, 67
9002044 67

Leveling Leg
9001621 11

Lever Spring
9001553 49

Light Microswitch
9001372 49

Lip Seal
B12332201 27
B12332301 27

Liquid Soap Dispenser Insert
9001511 93

Liquid Soap Manifold
9001551 ..... 85, 93

Lock Shaft
9001468 49

Logo Decal
9001890 59

M

Main Control
9002100 59

Main Switch
9001387 79
9001390 79
9002089 79

Main Switch Cover
9002088 79

Micro to Connector Harness
9001905 85

Motor
B12510501 ..... 33, 37
B12510601 ..... 35, 37

Motor and Fan Harness
9002076 85
9002077 85

Motor and Inverter Fan
9001382 ..... 33, 35, 37, 81

Motor Key
227/00126/01 ..... 33, 37
227/00127/01 ..... 35, 37

Motor Plate
9001154 ..... 33, 35

Motor Pulley
9001931 37
9001982 37

N

Neutral Terminal Block
9001388 79
9001391 79

Noise Filter
B12339401 85
9001592 85
9001593 85

Noise Suppressor
9001746 61

Nut
9001248 13
9001249 47
9001250 ..... 9, 41, 91
9001251 ..... 65, 67
9001252 ..... 73, 75, 77, 81, 87, 89, 91
9001253 ..... 49, 59
9001254 ..... 17, 19, 21, 39, 41, 65, 67
9001255 ..... 33, 35
9001258 ..... 51, 53, 55
9001260 ..... 47, 51, 53, 55, 65, 67
9001262 37
9001263 ..... 13, 15, 19, 21, 33, 35, 87, 89, 91
9001264 ..... 9, 11, 23, 25, 27
9001265 23
9001267 ..... 35, 65, 81
9001268 ..... 33, 37
9001269 59
9001270 ..... 43, 45, 73, 75, 77
9001311 ..... 43, 45, 61, 65, 87, 89, 97
9001344 ..... 73, 75, 77
9001347 ..... 65, 67
9001349 ..... 69, 71
9001435 73
9001436 73
9001916 11

O

O-Ring
9001460 23
9001469 ..... 49, 51, 53, 55

Outer Tub
B12328701 ..... 19, 21
9002048 ..... 19, 21
9002054 ..... 19, 21
9002055 ..... 19, 21

Outlet Pipe Plate Assembly
9001037 ..... 39, 41, 43, 45, 47, 65, 67

Out-of-Balance Switch
9001369 ..... 87, 89, 91

Out-of-Balance Switch Boot
9001766 ..... 87, 89, 91

Out-of-Balance Switch Bracket
9001065 87

Overflow Hose
223/00131/00 47
9001504 41
9001527 ..... 39, 43, 45
9001983 43

Overlay
F8435601 59
F9001561 59
9001563 59

Overload Contactor
9002021 63
9002022 63
9002023 63
9002024 63
9002025 63
9002026 63
9002027 63

info@zipnaskladze.ru
8(800)500-6251

N/A items do not appear in index.

© Copyright, Alliance Laundry Systems LLC – DO NOT COPY or TRANSMIT

P

Parameter Unit Assembly
F8410901 81
9001011 ..... 81, 85

Plug
9001421 ..... 73, 75, 77

Pressure Hose
223/00333/00 ..... 43, 45, 61, 63
9001531 85

Pressure Switch
209/00027/10 63
9001351 61

Pressure Switch Cap
9001932 ..... 43, 63

Pressure Switch Elbow
9001542 ..... 45, 61

Pressure Switch Hose Tee
223/00173/10 ..... 43, 45, 61, 63

Prewash and Mainwash Nozzle
9001487 ..... 43, 45, 73, 75, 77

Programming Cable
9001418 59

Programming Key
9001756 59

Programming Key Contact Switch
9001378 59

Pulley
9001565 35
9001566 29
9001567 29
9001571 33
9001930 31

Pushbutton
44018801 59

R

Rear Lower Panel
9001082 ..... 69, 71

Rear Right Panel
9001078 65

Restrictor Assembly
F060334200P 93

Retainer Ring
9001440 ..... 25, 27
9001446 23
9001447 23
9001448 23
9001449 23
9001453 ..... 23, 25, 27
9001622 23

Right Front Panel
9001692 ..... 65, 67
9002041 67

Rinse Insert
9001506 93

Rivet
9001346 ..... 75, 77, 79
9001953 75

S

Safety Level Switch
900/00108/00 97

Screw
B12347501 93
B12350903 93
B12500801 55
207/00112/00 49
207/00135/00 49
208/00130/00 85
9001300 ..... 9, 11, 23, 25, 27
9001302 ..... 29, 33, 35, 37
9001303 ..... 23, 25, 27
9001308 39
9001323 85
9001324 49
9001325 ..... 87, 89, 91
9001326 ..... 51, 53
9001327 35
9001329 ..... 73, 75, 77
9001333 49
9001336 ..... 33, 37
9001338 81
9001341 ..... 51, 53, 55
9001343 ..... 65, 73, 75
9001657 ..... 9, 19, 21
9001661 ..... 65, 67
9001662 ..... 65, 67
9001663 ..... 87, 89
9001984 ..... 67, 77
9001993 65
9002018 67

Seal Cover
9001032 23

Seal Holder Assembly
9001117 ..... 23, 25

Seal Plate
9001116 23

Seal Plate Assembly
B12333601 27
B12333701 27

Shaft Seal
9001461 23
9001482 23

Shaft Seal Holder
9001699 ..... 23, 25

Shipping Brace
185/00009/12 11

Shipping Bracket
9001760 9

Shock Absorber
247/00002/03 ..... 13, 15
247/00003/00 13
9001613 ..... 13, 15
9001614 13

Side Panel
111/10089/00 ..... 67, 71
111/10089/60 ..... 67, 71
111/60031/00 ..... 67, 71
9001069 ..... 65, 69, 71
9001070 ..... 65, 69
9001086 ..... 65, 67, 69, 71
9002045 67

info@zipnasklad.ru
8(800)500-68251

N/A items do not appear in index.

© Copyright, Alliance Laundry Systems LLC – DO NOT COPY or TRANSMIT

Siphon Break Dispenser Hose
9001664 93
9001666 93
Siphon Break Hose
9001665 93
9001667 93
Soap Dispenser Assembly
223/00102/30 93
Soap Dispenser Cover
9001514 ..... 69, 71
Soap Dispenser Cover Hinge Rod
9001516 ..... 69, 71
Soap Dispenser Crossbar
9002019 67
Soap Dispenser Frame
9001515 ..... 69, 71
Soap Dispenser Gasket
9001522 93
Soap Dispenser Rinse Siphon
9001507 93
Soap Harness
210/01304/07 59
Soap Injection PCB with Fuse
9001366 ..... 73, 75, 77
Soap Spray Nozzle
9001509 93
Softener Spray Nozzle
9001508 93
Spacer
9001425 59
9001659 59
Speed Detector
210/00074/00 ..... 23, 25, 27
Spring Holder Top
9001611 ..... 13, 15
Spring Seat Bottom
9001610 ..... 13, 15
Standoff
9001429 ..... 73, 75, 77
Steam Bracket
111/00155/00 97
Steam Heat Kit
924P3 97
Steam Hose
217/00063/00 97
Steam Valve
9001386 97
Strain Relief Connector
F140329 97
Supply Deflector
F200047800 93
Support Connector
9001960 63
Suspension Spring
9001609 ..... 13, 15
9001612 13
9001618 ..... 13, 15
Switch Base
9001356 59
Switch Knob
9002072 59
Switch Lever
9001479 49

T

Terminal Block
9001354 ..... 73, 75, 77
Thermostat
210/01064/16 61
9001669 63
Thermostat Seal
9001564 ..... 61, 63
Tilt Detector Plate
9001043 ..... 87, 89
9001917 ..... 19, 21, 91
Tilt Switch Bracket
9001042 89
Tilt Switch Support
9001964 91
9001965 91
Tolerance Ring
9001928 31
Top Panel
111/22743/00 ..... 69, 71
9001084 ..... 69, 71
9001085 69
T-Piece
253/00006/00 47
Transformer
9001986 85
Tub
9001108 17
9001109 17
9001111 17
9001112 17
9001113 17
9001114 17
9001115 17
9001690 17
9001691 17
9001918 ..... 19, 21
9001919 ..... 19, 21
Tub Front
9001102 17
9001136 17
Tub Front Panel Clip
9001464 ..... 17, 19, 21
Tub Front Ring Clamp
9001463 ..... 17, 19, 21
9001484 ..... 17, 19, 21
Tub Gasket
223/00242/10 ..... 17, 19, 21
223/00242/20 ..... 17, 19, 21
Tub Support
9001156 9
9001157 9
9001158 9
9001914 11
9002052 11
Tub to Drain Valve Hose
9001933 43
9002085 45

info@zipnaskype.ru
8(800)500-69-51

N/A items do not appear in index.

© Copyright, Alliance Laundry Systems LLC – DO NOT COPY or TRANSMIT

V

V-Belt
- 9001572 29
- 9001573 29

Vent Hose
- 9001519 93

Voltage Discharge Decal
- B12355001 85

W

Washer
- B12421401 67
- 20290 ..... 73, 75, 77
- 202/00111/00 ..... 51, 53, 55
- 803615 ..... 73, 75, 77
- 9001208 ..... 33, 35
- 9001209 ..... 43, 45, 73, 75, 77
- 9001210 29
- 9001212 ..... 9, 11
- 9001213 ..... 37, 65, 67, 73, 75, 77, 91
- 9001214 ..... 9, 17, 19, 21, 39, 41, 43, 45
- 9001215 35
- 9001216 ..... 19, 21, 87, 89, 91
- 9001217 29
- 9001218 ..... 23, 25, 27
- 9001219 23
- 9001220 ..... 13, 15, 31
- 9001221 49
- 9001222 49
- 9001225 ..... 23, 25, 27
- 9001227 47
- 9001228 ..... 65, 67
- 9001229 ..... 65, 73, 75, 77, 79, 81
- 9001230 ..... 51, 53, 55
- 9001232 ..... 51, 53, 55
- 9001235 ..... 19, 21, 51, 53, 55
- 9001236 ..... 65, 67
- 9001238 ..... 9, 29
- 9001239 ..... 13, 31
- 9001240 47
- 9001241 ..... 23, 25, 27, 39, 41, 47
- 9001242 ..... 65, 67
- 9001243 ..... 73, 75, 77, 79, 81, 85, 87, 89, 91
- 9001244 ..... 49, 59
- 9001246 49
- 9001247 ..... 65, 67
- 9001523 59

Water Hose
- F200164 ..... 73, 75, 77
- F200166 ..... 73, 75, 77
- 9001498 ..... 45, 73, 75, 77
- 9001499 ..... 43, 73, 75, 77, 93

Water Valve Adapter
- 9001990 ..... 73, 75, 77

Wire Harness
- 210/01064/10 49

info@zipnasklade.ru
8(800)500-69-51

N/A items do not appear in index.

© Copyright, Alliance Laundry Systems LLC – DO NOT COPY or TRANSMIT

Notes

info@zipnasklade.ru
8(800)500-69-51

© Copyright, Alliance Laundry Systems LLC – DO NOT COPY or TRANSMIT