# Homestyle Dryer

Refer to Page 5 for Model Numbers

Parts

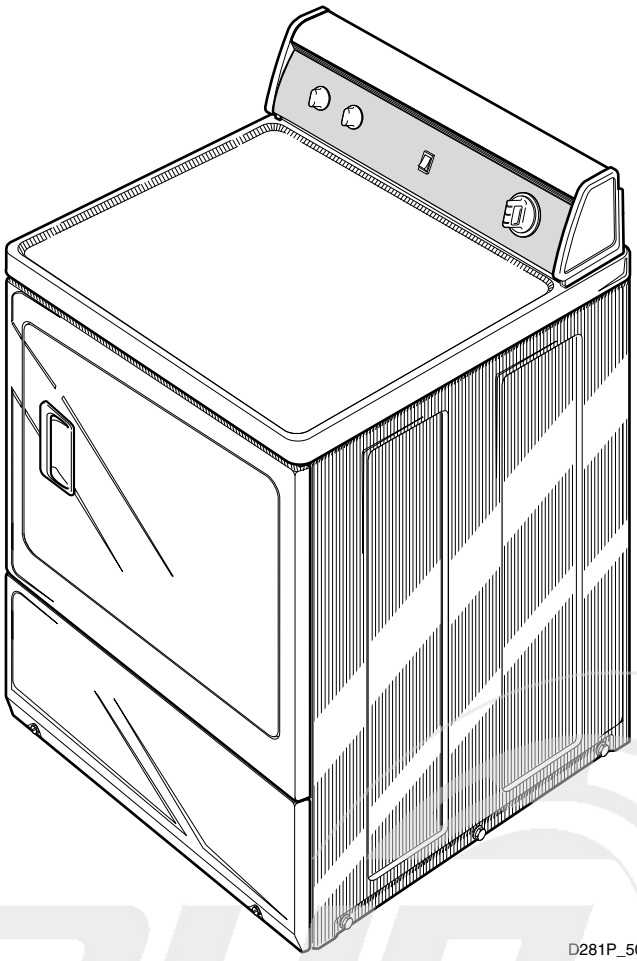


info@zipnasklade.ru
8(800)500-69-51

Alliance Laundry Systems

www.alliancelaundry.com

Part No. 506054R16
December 2013

info@zipnasklade.ru
8(800)500-69-51

# Table of Contents


| Title | Page |
|---|---|
| Parts Ordering Information | 3 |
| Nameplate Location | 3 |
| Model Identification | 5 |
| Graphic Panel - Rear Control Models | 6 |
| Control Panel and Knobs - Rear Control Models | 8 |
| Controls - Rear Control Models | 10 |
| Control Cabinet - Front Control Models | 12 |
| Control Panel and Controls - Front Control | 14 |
| Control Cabinet and Controls | 16 |
| Cabinet Top and Control Hood Rear Panel - Rear Control Models | 18 |
| Loading Door (Drawing 1 of 2) | 20 |
| Loading Door (Drawing 2 of 2) | 22 |
| Front Panel and Seal | 24 |
| Access Panel | 26 |
| Motor, Exhaust Fan and Belt (Drawing 1 of 2) | 28 |
| Motor, Exhaust Fan and Belt (Drawing 2 of 2) | 30 |
| Thermostat | 32 |
| Front Bulkhead, Seal and Air Duct - Without Light | 34 |
| Front Bulkhead and Seal - With Light | 36 |
| Air Duct | 38 |
| Cylinder, Baffles and Drying Rack | 40 |
| Rear Bulkhead, Felt Seal and Cylinder Roller - 1 Phase Models | 42 |
| Terminal Block - 1 Phase Models | 44 |
| Rear Bulkhead, Felt Seal, Cylinder Roller and Terminal Block - 3 Phase Models | 46 |
| Heater Duct and Element Assembly - 1 Phase Models | 48 |
| Heater Kit Assembly - 1 Phase Models | 50 |
| Heater Duct and Element Assembly - 3 Phase Models | 52 |
| Heater Duct Assembly | 54 |
| Gas Valve and Igniter | 56 |
| Gas Conversion Kits | 58 |
| Gas Valve, Igniter, Ignition Control and Gas Conversion Kits | 60 |
| Burner Orifice Spuds - For Higher Elevations (Drawing 1 of 2) | 62 |
| Burner Orifice Spuds - For Higher Elevations (Drawing 2 of 2) | 64 |
| Cabinet, Exhaust Duct and Base | 66 |
| Power Cord | 68 |
| Strain Relief | 70 |
| Terminal Block and Terminals | 72 |
| Terminals | 74 |
| Motor Connection Block, Terminal Extractor Tools | 76 |
| Wire Harnesses and Wires - Front Control Models (Drawing 1 of 3) | 78 |
| Wire Harnesses and Wires - Front Control Models (Drawing 2 of 3) | 80 |


info@zippasklade.ru
8(800)500-69-51

© Copyright 2013, Alliance Laundry Systems LLC

All rights reserved. No part of the contents of this book may be reproduced or transmitted in any form or by any means without the expressed written consent of the publisher.

Wire Harnesses and Wires - Front Control Models (Drawing 3 of 3) ..... 82
Wire Harnesses and Wires - Rear Control Models Through Serial No. 1207 ..... 84
Wire Harnesses and Wires - Rear Control Models Starting Serial No. 1207 ..... 86
Parts Index ..... 89

info@zipnasklade.ru
8(800)500-69-51


© Copyright, Alliance Laundry Systems LLC – DO NOT COPY or TRANSMIT

# Parts Ordering Information

If literature or replacement parts are required, contact the source from whom the machine was purchased or contact Alliance Laundry Systems at (920) 748-3950 for the name and address of the nearest authorized parts distributor.

For technical assistance, call either of the numbers listed below:

(920) 748-3121 Ripon, Wisconsin

+32 56 41 20 54 Wevelgem, Belgium

# Nameplate Location

When calling or writing about your product, be sure to mention model and serial numbers. Model and serial numbers are located on nameplate(s) as shown.

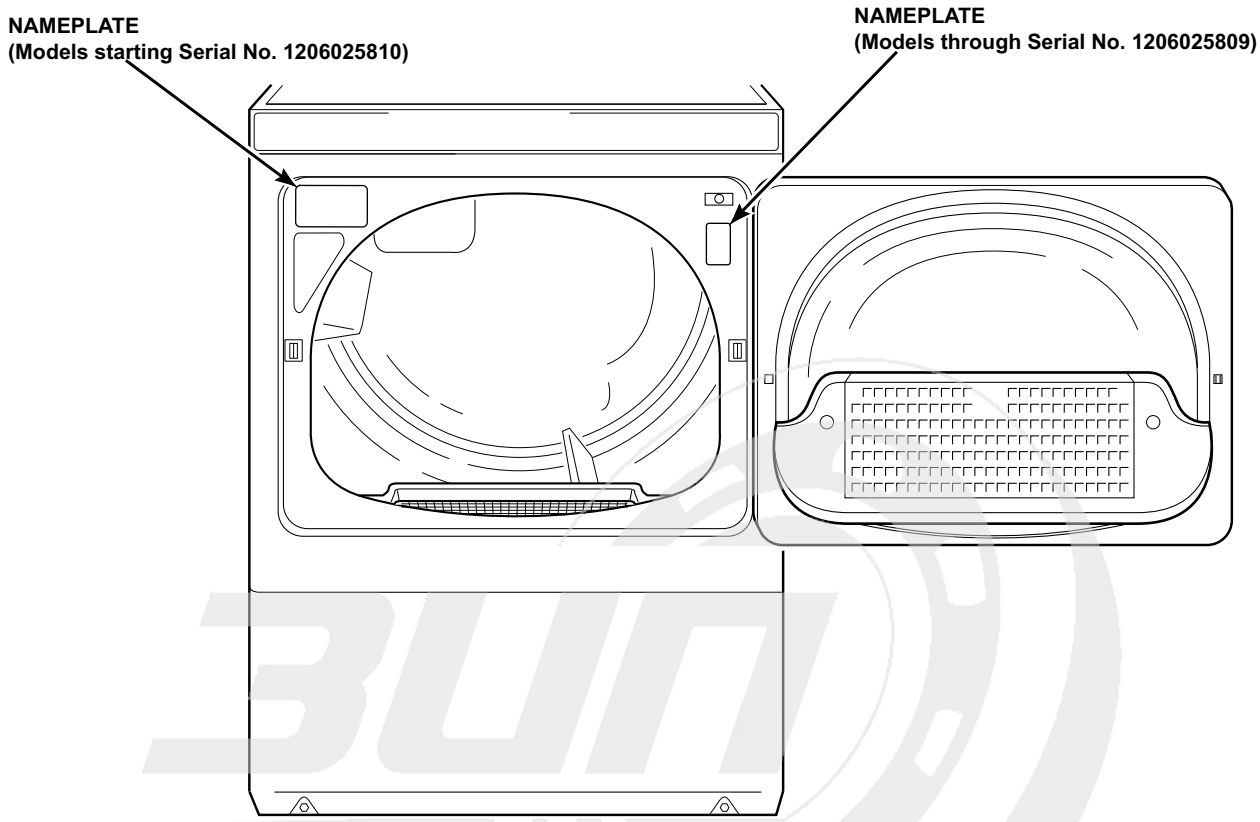


DRY2283P_506054

info@zipnasklade.ru
8(800)500-69-51


© Copyright, Alliance Laundry Systems LLC – DO NOT COPY or TRANSMIT

# Notes

info@zipnasklade.ru
8(800)500-69-51


© Copyright, Alliance Laundry Systems LLC – DO NOT COPY or TRANSMIT

# Model Identification

Information in this manual is applicable to these dryer models:

ADE3TFWS431AW01
ADE3TRWS431AW01
ADE3TRWS431NW22
ADE32FSS431AN01
ADE32FSS431NN22
ADE32FSS541RN01
ADE41FSS171TN03
ADG3TFWS301AW01
ADG3TRWS301AW01
ADG32FSS301AN01
ADG41FSS111TN03
AEZ17A*F1702
AEZ28A*F1702
AEZ68A*F1702
AGZ17A*F1102
AGZ28A*F1102
AGZ68A*F1102
BDE30FGS171CW01
BDG30FGS111CW01
CDE3LRGS171CW01
CDE4BFGS171CW01
CDG3LRGS111CW01
CDG4BFGS111CW01
CEZ68A*F1702
CGZ68A*F1102
FDE3TRGS301NW10
FDE3TRGS401NW22
FDG3TRGS301NW10
FEN16A*G4018
FEN17A*G3018
FEN17A*G4018
FES16A*G4018
FES17A*F3300
FES17A*F4350
FEU17A*F1702
FEZ17A*F1702
FGN16A*M3013
FGN17A*M3013
FGS17A*F3060
FGZ17A*F1102
LDE3TRWS331TW05
LDG3TRWS111TW05
LEB07A*F1709
LED17A*F1700
LEG37A*F4350
LEH37A*F3300
LEK37A*F4350
LEN27A*G3008
LEN27A*G3018
LEN27A*G4008
LEN27A*G4018
LEN27A*G99M3
LEN37A*G3018
LEN37A*G4018
LES17A*F3000
LES17A*F3007
LES17A*F3022
LES17A*F4500
LES17A*M4588
LES27A*G3018
LES27A*G4000
LES27A*G4500
LES27A*G4518
LES27A*G4018
LES28A*G4018
LES33A*F4562
LES37A*F3000
LES37A*F3028
LES37A*F3300
LES37A*F3327
LES37A*F4350
LES37A*F5412
LES37A*G3018
LES37A*G4018
LET57A*F1700
LET67A*F1700
LET68A*F1700
LEY47A*F1709
LEZ27A*F1502
LEZ27A*F1702
LEZ27A*G3018
LEZ27A*G4018
LEZ37A*F1702
LEZ37A*F3000
LEZ37A*G3018
LEZ37A*G4018
LEZ37A*G5618
LEZ57A*F1702
LEZ67A*F1702
LGG37A*F3058
LGH37A*F1182
LGH37A*F5423
LGK37A*F3058
LGK37A*F3060
LGN27A*M3008
LGN27A*M3013
LGN37A*M3013
LGS17A*F3020
LGS17A*F3081
LGS17A*K1180
LGS17A*M3020
LGS17A*M3082
LGS27A*M3013
LGS27A*M3080
LGS37A*F3000
LGS37A*F3022
LGS37A*F3028
LGS37A*F3058
LGS37A*F3060
LGS37A*F3080
LGS37A*F5412
LGS37A*F5423
LGS37A*G3013
LGS37A*G3080
LGS37A*M3013
LGS37A*M3080
LGS38A*M3013
LGS38A*M3020
LGS40A*M3020
LGT57A*F1100
LGT68A*F1100
LGY47A*F1109
LGZ27A*F1102
LGZ27A*M3013
LGZ37A*F1102
LGZ37A*F3000
LGZ37A*G3013
LGZ37A*M3013
LGZ57A*F1102
LGZ67A*F1102
MDE3TRWS331TW06
MDG3TRWS111TW06
ZDE30RGS171CW01
ZDE3LRGS171CW01
ZDE41FSS171CN01
ZDE4BFGS171CW01
ZDE4BRGS171CW01
ZDG30RGS111CW01
ZDG3LRGS111CW01
ZDG41FSS111CN01
ZDG4BFGS111CW01
ZDG4BRGS111CW01

*** Add Letter To Designate Color. G - Gray L - Almond Q - Bisque W - White**

info@zipnasklade.ru
8(800)500-69-51


© Copyright, Alliance Laundry Systems LLC – DO NOT COPY or TRANSMIT

# Graphic Panel - Rear Control Models

All Models Except ADE3TFWS431AW01, ADE32FSS431AN01, ADE32FSS431NN22, ADE32FSS541RN01, ADE41FSS171TN03, ADG3TFWS301AW01, ADG32FSS301AN01, ADG41FSS111TN03, BDE30FGS171CW01, BDG30FGS111CW01, CDE4BFGS171CW01, CDG4BFGS111CW01, CEZ68A*F1702, CGZ68A*F1102, FEN16A*G4018, FEN17A*G3018, FEN17A*G4018, FES16A*G4018, FES17A*F3300, FES17A*F4350, FEU17A*F1702, FEZ17A*F1702, FGN16A*M3013, FGN17A*M3013, FGS17A*F3060, FGZ17A*F1102, ZDE41FSS171CN01, ZDE4BFGS171CW01, ZDG41FSS111CN01 and ZDG4BFGS111CW01

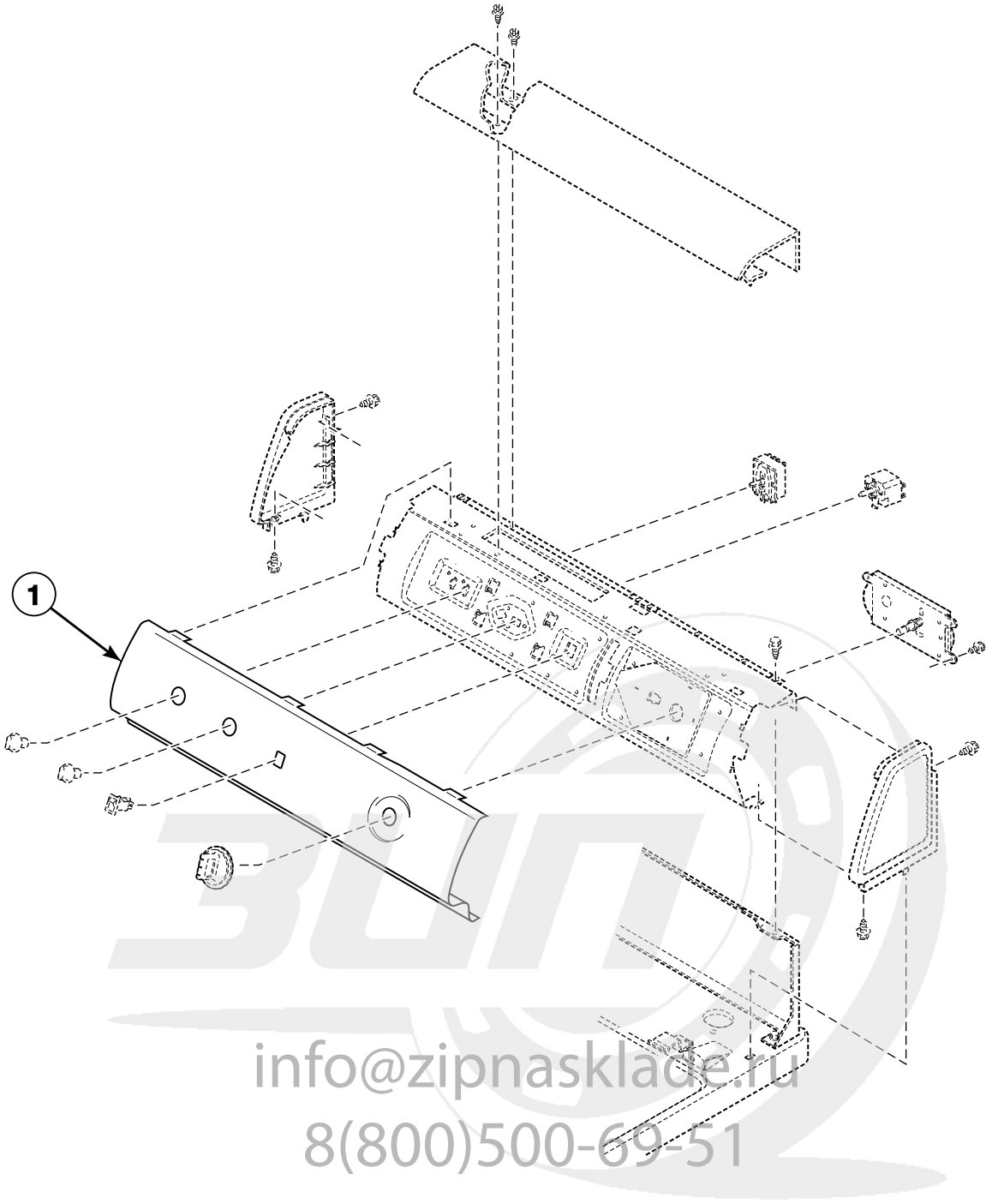


info@zipnasklade.ru
8(800)500-69-51

DRY1868P_506054


© Copyright, Alliance Laundry Systems LLC – DO NOT COPY or TRANSMIT

# Graphic Panel - Rear Control Models

| REF | PART NO. | DESCRIPTION | COMMENTS |
|---|---|---|---|
| 1 | 503394 | Graphic Panel | Model LES33A*F4562 |
| | 504020W | Graphic Panel | Models LES37A*F3000, LES37A*F3300, LES37A*F3327, LES37A*F4350, LES37A*F5412, LGS37A*F3000, LGS37A*F3022, LGS37A*F3058, LGS37A*F3060, LGS37A*F3080, LGS37A*F5412 and LGS37A*F5423 |
| | 504072WP | Graphic Panel | White; Models LEZ37A*F3000 and LGZ37A*F3000 |
| | 504072QP | Graphic Panel | Bisque; Models LEZ37A*F3000 and LGZ37A*F3000 |
| | 504107W | Graphic Panel | Models LEZ27A*G3018, LEZ27A*G4018, LEZ37A*G3018, LEZ37A*G4018, LEZ37A*G5618, LGZ27A*M3013, LGZ37A*G3013 and LGZ37A*M3013 |
| | 504197W | Graphic Panel | White; Models LES17A*F3000, LES17A*F3007, LES17A*F3022, LES17A*F4500, LES17A*M4588, LGS17A*F3020, LGS17A*F3081, LGS17A*M3020 and LGS17A*M3082 |
| | 504197Q | Graphic Panel | Bisque; Models LES17A*F3000, LES17A*F3007, LES17A*F3022, LES17A*F4500, LES17A*M4588, LGS17A*F3020, LGS17A*F3081, LGS17A*M3020 and LGS17A*M3082 |
| | 505157WP | Graphic Panel | Model LGK37A*F3058 |
| | 505850 | Graphic Panel | Models LEH37A*F3300, LGH37A*F1182 and LGH37A*F5423 |
| | 505911 | Graphic Panel | Models LEZ67A*F1702 and LGZ67A*F1102 |
| | 505912 | Graphic Panel | Models LEZ57A*F1702 and LGZ57A*F1102 |
| | 505913 | Graphic Panel | Models LEZ27A*F1502, LEZ27A*F1702, LEZ37A*F1702, LGZ27A*F1102 and LGZ37A*F1102 |
| | N/A | Graphic Panel | Model LGS17A*K1180 through Serial No. 0503001144; Models LEB07A*F1709, LEG37A*F4350, LET67A*F1700, LEY47A*F1709, LGG37A*F3058 and LGY47A*F1109 |
| | 512622W | Graphic Panel | Model LGS17A*K1180 starting Serial No. 0503001145 |
| | 511437 | Graphic Panel | Models LEN27A*G3008, LEN27A*G4008, LEN27A*G99M3 and LGN27A*M3008 |
| | 511639 | Graphic Panel | Model LED17A*F1700 through Serial No. 0701 |
| | 512168W | Graphic Panel | Model LED17A*F1700 starting Serial No. 0702 |
| | 511882 | Graphic Panel | Models LET57A*F1700, LET68A*F1700, LGT57A*F1100 and LGT68A*F1100 |
| | 511902W | Graphic Panel | Models LEK37A*F4350 and LGK37A*F3060 |
| | 512166W | Graphic Panel | Models AEZ17A*F1702 and AGZ17A*F1102 |
| | 512167W | Graphic Panel | Models AEZ68A*F1702 and AGZ68A*F1102 |
| | 512370 | Graphic Panel | Models FDE3TRGS401NW22, LEN27A*G3018, LEN27A*G4018, LEN37A*G3018, LEN37A*G4018, LGN27A*M3013 and LGN37A*M3013 |
| | 512752W | Graphic Panel | Models AEZ28A*F1702 and AGZ28A*F1102 |
| | 511914W | Graphic Panel | Models CDE3LRGS171CW01 and CDG3LRGS111CW01 |
| | 513523W | Graphic Panel | Models LDE3TRWS331TW05, LDG3TRWS111TW05, MDE3TRWS331TW06 and MDG3TRWS111TW06 |
| | 513016W | Graphic Panel | Models ZDE30RGS171CW01 and ZDG30RGS111CW01 |
| | 513017W | Graphic Panel | Models ZDE3LRGS171CW01 and ZDG3LRGS111CW01 |
| | 513018W | Graphic Panel | Models ZDE4BRGS171CW01 and ZDG4BRGS111CW01 |
| | 513244W | Graphic Panel | Models ADE3TRWS431AW01, ADE3TRWS431NW22 and ADG3TRWS301AW01 |
| | 513764W | Graphic Panel | Models FDE3TRGS301NW10 and FDG3TRGS301NW10 |
| | 504070W | Graphic Panel | All other models |

*** Add Letter To Designate Color. G - Gray L - Almond Q - Bisque W - White**

**N/A = Part no longer available**

info@zippaskade.ru
8(800)500-69-51


© Copyright, Alliance Laundry Systems LLC – DO NOT COPY or TRANSMIT

# Control Panel and Knobs - Rear Control Models

All Models Except ADE3TFWS431AW01, ADE32FSS431AN01, ADE32FSS431NN22, ADE32FSS541RN01, ADE41FSS171TN03, ADG3TFWS301AW01, ADG32FSS301AN01, ADG41FSS111TN03, BDE30FGS171CW01, BDG30FGS111CW01, CDE4BFGS171CW01, CDG4BFGS111CW01, CEZ68A*F1702, CGZ68A*F1102, FEN16A*G4018, FEN17A*G3018, FEN17A*G4018, FES16A*G4018, FES17A*F3300, FES17A*F4350, FEU17A*F1702, FEZ17A*F1702, FGN16A*M3013, FGN17A*M3013, FGS17A*F3060, FGZ17A*F1102, ZDE41FSS171CN01, ZDE4BFGS171CW01, ZDG41FSS111CN01 and ZDG4BFGS111CW01

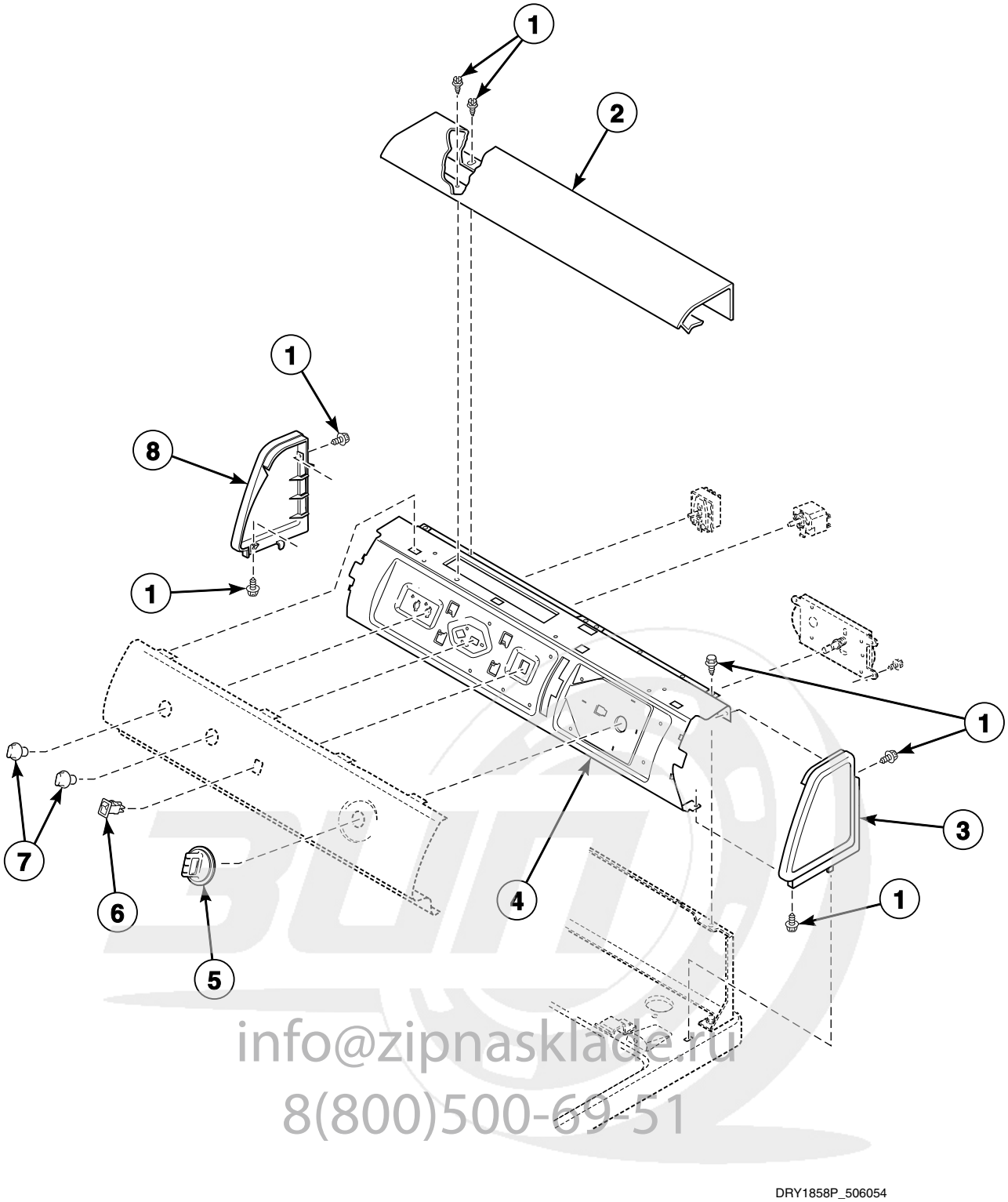


info@zipnasklade.ru
8(800)500-69-51


© Copyright, Alliance Laundry Systems LLC – DO NOT COPY or TRANSMIT

# Control Panel and Knobs - Rear Control Models

| REF | PART NO. | DESCRIPTION | COMMENTS |
|---|---|---|---|
| | 511148 | Wire Assembly | Extra tumble; Use with item 6; Models AEZ68A*F1702, AGZ68A*F1102, ZDE4BRGS171CW01 and ZDG4BRGS111CW01 |
| 1 | 501086 | Screw | |
| 2 | 505808W | Top Cover | White |
| | 505808G | Top Cover | Gray |
| | N/A | Top Cover | Almond |
| | 505808Q | Top Cover | Bisque |
| 3 | 504006P | End Panel | Right; Black; Models LEN27A*G3008, LEN27A*G4008, LEN27A*G99M3 and LGN27A*M3008 |
| | 504008WP | End Panel | White; Right; All other models |
| | 504008L | End Panel | Almond; Right; All other models |
| | 504008QP | End Panel | Bisque; Right; All other models |
| 4 | 503901 | Control Support Panel | |
| 5 | 512118 | Timer Knob Assembly | Black; Models LEN27A*G3008, LEN27A*G4008, LEN27A*G99M3 and LGN27A*M3008 |
| | 803168P | Knob Assembly | Models ADE3TRWS431AW01, ADE3TRWS431NW22, ADG3TRWS301AW01, ZDE30RGS171CW01, ZDE3LRGS171CW01, ZDE4BRGS171CW01, ZDG30RGS111CW01, ZDG3LRGS111CW01 and ZDG4BRGS111CW01 |
| | 512117W | Timer Knob Assembly | White; All other models |
| | 512117Q | Timer Knob Assembly | Bisque; All other models |
| 6 | 38424W | Rocker Switch | White; Models AEZ68A*F1702, AGZ68A*F1102, LET57A*F1700, LET67A*F1700, LET68A*F1700, LEZ57A*F1702, LEZ67A*F1702, LGT57A*F1100, LGT68A*F1100, LGZ57A*F1102, LGZ67A*F1102, ZDE4BRGS171CW01 and ZDG4BRGS111CW01 |
| | 38424L | Rocker Switch | Almond; Models AEZ68A*F1702, AGZ68A*F1102, LET57A*F1700, LET67A*F1700, LET68A*F1700, LEZ57A*F1702, LEZ67A*F1702, LGT57A*F1100, LGT68A*F1100, LGZ57A*F1102 and LGZ67A*F1102 |
| | 38424Q | Rocker Switch | Bisque; Models AEZ68A*F1702, AGZ68A*F1102, LET57A*F1700, LET67A*F1700, LET68A*F1700, LEZ57A*F1702, LEZ67A*F1702, LGT57A*F1100, LGT68A*F1100, LGZ57A*F1102 and LGZ67A*F1102 |
| 7 | 511439 | Knob Assembly | Black; Models LEN27A*G3008, LEN27A*G4008, LEN27A*G99M3 and LGN27A*M3008 |
| | 803119P | Control Knob Assembly | Models ADE3TRWS431AW01, ADE3TRWS431NW22, ADG3TRWS301AW01, ZDE30RGS171CW01, ZDE3LRGS171CW01, ZDE4BRGS171CW01, ZDG30RGS111CW01, ZDG3LRGS111CW01 and ZDG4BRGS111CW01 |
| | 36701W | Knob Assembly | White; All other models |
| | 36701L | Knob Assembly | Almond; All other models |
| | 36701Q | Knob Assembly | Bisque; All other models |
| 8 | 504007P | End Panel | Left; Black; Models LEN27A*G3008, LEN27A*G4008, LEN27A*G99M3 and LGN27A*M3008 |
| | 504009WP | End Panel | White; Left; All other models |
| | N/A | End Panel | Almond; Left; All other models |
| | 504009QP | End Panel | Bisque; Left; All other models |

*** Add Letter To Designate Color. G - Gray L - Almond Q - Bisque W - White**

**N/A = Part no longer available**

info@zipnashlab.ru
8(800)500 69 51


© Copyright, Alliance Laundry Systems LLC – DO NOT COPY or TRANSMIT

# Controls - Rear Control Models

All Models Except ADE3TFWS431AW01, ADE32FSS431AN01, ADE32FSS431NN22, ADE32FSS541RN01, ADE41FSS171TN03, ADG3TFWS301AW01, ADG32FSS301AN01, ADG41FSS111TN03, BDE30FGS171CW01, BDG30FGS111CW01, CDE4BFGS171CW01, CDG4BFGS111CW01, CEZ68A*F1702, CGZ68A*F1102, FEN16A*G4018, FEN17A*G3018, FEN17A*G4018, FES16A*G4018, FES17A*F3300, FES17A*F4350, FEU17A*F1702, FEZ17A*F1702, FGN16A*M3013, FGN17A*M3013, FGS17A*F3060, FGZ17A*F1102, ZDE41FSS171CN01, ZDE4BFGS171CW01, ZDG41FSS111CN01 and ZDG4BFGS111CW01

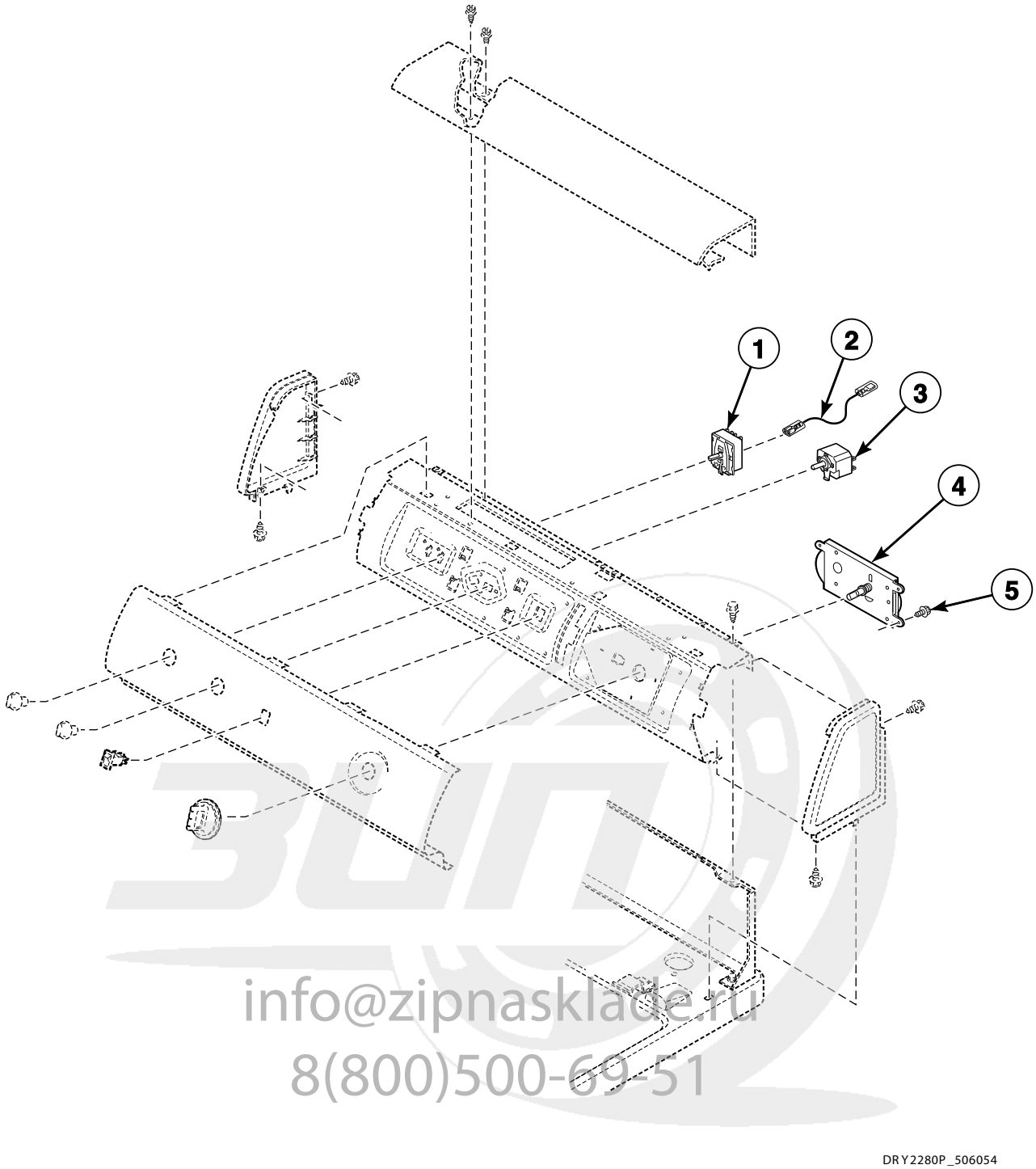


info@zipnasklade.ru
8(800)500-69-51


© Copyright, Alliance Laundry Systems LLC – DO NOT COPY or TRANSMIT

# Controls - Rear Control Models

| REF | PART NO. | DESCRIPTION | COMMENTS |
|---|---|---|---|
| 1 | 513504 | Fabric Selector Switch | Model LES33A*F4562 |
| | 513506 | Fabric Selector Switch | Models AEZ68A*F1702, AGZ68A*F1102, LET57A*F1700, LET67A*F1700, LET68A*F1700, LEY47A*F1709, LEZ57A*F1702, LEZ67A*F1702, LGT57A*F1100, LGT68A*F1100, LGY47A*F1109, LGZ57A*F1102, LGZ67A*F1102, ZDE4BRGS171CW01 and ZDG4BRGS111CW01 |
| | 513505 | Fabric Selector Switch | All other models |
| 2 | 510540 | Wire Assembly | Fabric selector switch to timer; Electric models |
| 3 | 510211 | Buzzer | Models AEZ68A*F1702, AGZ68A*F1102, LDG3TRWS111TW05, LET57A*F1700, LET67A*F1700, LET68A*F1700, LEY47A*F1709, LEZ27A*F1502, LEZ27A*F1702, LEZ37A*F1702, LEZ57A*F1702, LEZ67A*F1702, LGH37A*F1182, LGT57A*F1100, LGT68A*F1100, LGY47A*F1109, LGZ27A*F1102, LGZ37A*F1102, LGZ57A*F1102, LGZ67A*F1102, MDG3TRWS111TW06, ZDE4BRGS171CW01 and ZDG4BRGS111CW01 |
| | 504103 | Adjustable Buzzer | All models except AEZ17A*F1702, AEZ28A*F1702, AEZ68A*F1702, AGZ17A*F1102, AGZ28A*F1102, AGZ68A*F1102, CDE3LRGS171CW01, CDG3LRGS111CW01, LDG3TRWS111TW05, LEB07A*F1709, LED17A*F1700, LES17A*F3000, LES17A*F3007, LES17A*F3022, LES17A*F4500, LES17A*M4588, LET57A*F1700, LET67A*F1700, LET68A*F1700, LEY47A*F1709, LEZ27A*F1502, LEZ27A*F1702, LEZ37A*F1702, LEZ57A*F1702, LEZ67A*F1702, LGH37A*F1182, LGS17A*F3020, LGS17A*F3081, LGS17A*K1180, LGS17A*M3020, LGS17A*M3082, LGS37A*G3013, LGS37A*G3080, LGT57A*F1100, LGT68A*F1100, LGY47A*F1109, LGZ27A*F1102, LGZ37A*F1102, LGZ37A*G3013, LGZ57A*F1102, LGZ67A*F1102, MDG3TRWS111TW06, ZDE30RGS171CW01, ZDE3LRGS171CW01, ZDE4BRGS171CW01, ZDG30RGS111CW01, ZDG3LRGS111CW01 and ZDG4BRGS111CW01 |
| | 505447 | Adjustable Buzzer | Models LGS37A*G3013, LGS37A*G3080 and LGZ37A*G3013 |
| 4 | 502966P | Timer | Models LGS37A*G3013, LGS37A*G3080 and LGZ37A*G3013 |
| | 505795P | Timer | Models FDE3TRGS301NW10, FDG3TRGS301NW10, LES17A*F3000, LES17A*F3007, LES17A*F3022, LES17A*F4500, LES17A*M4588, LES37A*F3000, LES37A*F4350, LEZ37A*F3000, LGS17A*F3020, LGS17A*F3081, LGS17A*M3020, LGS17A*M3082, LGS37A*F3000, LGS37A*F3022, LGS37A*F3058, LGS37A*F3060, LGS37A*F3080 and LGZ37A*F3000 |
| | 505796P | Timer | Models LDE3TRWS331TW05, LEH37A*F3300, LES37A*F3300, LES37A*F3327, LES37A*F5412, LGS37A*F5412, LGS37A*F5423 and MDE3TRWS331TW06 |
| | 505797P | Timer and Harness Kit | Models AEZ17A*F1702, AEZ28A*F1702, CDE3LRGS171CW01, LED17A*F1700, LEZ27A*F1502, LEZ27A*F1702, LEZ37A*F1702, ZDE30RGS171CW01 and ZDE3LRGS171CW01 |
| | 505794P | Timer | Models AGZ17A*F1102, AGZ28A*F1102, CDG3LRGS111CW01, LDG3TRWS111TW05, LGH37A*F1182, LGS17A*K1180, LGZ27A*F1102, LGZ37A*F1102, MDG3TRWS111TW06, ZDG30RGS111CW01 and ZDG3LRGS111CW01 |
| | 511149P | Timer | Models AGZ68A*F1102, LGT57A*F1100, LGT68A*F1100, LGZ57A*F1102, LGZ67A*F1102 and ZDG4BRGS111CW01 |
| | 511150P | Timer | Models AEZ68A*F1702, LET57A*F1700, LET67A*F1700, LET68A*F1700, LEZ57A*F1702, LEZ67A*F1702 and ZDE4BRGS171CW01 |
| | N/A | Timer and Harness Kit | Model LEB07A*F1709 |
| | N/A | Timer | Models LEY47A*F1709 and LGY47A*F1109 |
| | 502964P | Timer | All other models |
| 5 | 501086 | Screw | |

*** Add Letter To Designate Color. G - Gray L - Almond Q - Bisque W - White**

**N/A = Part no longer available**

info@zip-trade.ru
8(800)500-69-51


© Copyright, Alliance Laundry Systems LLC – DO NOT COPY or TRANSMIT

# Control Cabinet - Front Control Models

Models BDE30FGS171CW01, BDG30FGS111CW01, FEN16A*G4018, FEN17A*G3018, FEN17A*G4018, FES16A*G4018, FES17A*F3300, FES17A*F4350, FEU17A*F1702, FEZ17A*F1702, FGN16A*M3013, FGN17A*M3013, FGS17A*F3060 and FGZ17A*F1102

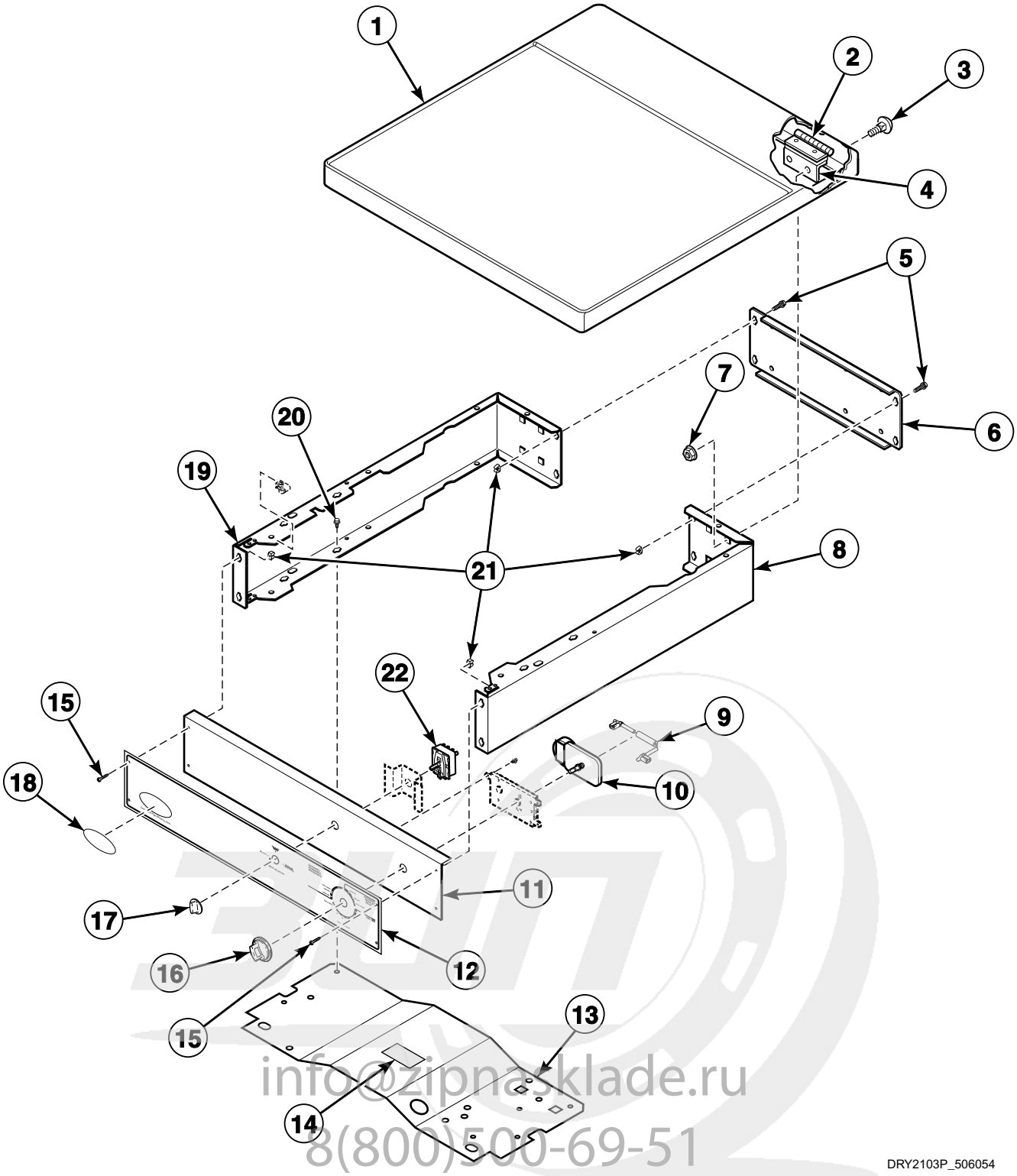


info@zipnasklade.ru
8(800)500-69-51


© Copyright, Alliance Laundry Systems LLC – DO NOT COPY or TRANSMIT

# Control Cabinet - Front Control Models

| REF | PART NO. | DESCRIPTION | COMMENTS |
|---|---|---|---|
| 1 | 511631P | Stainless Steel Top | Models FEN16A*G4018, FES16A*G4018 and FGN16A*M3013 |
| | 510032LP | Top Kit | Almond; All other models |
| | 802247QP | Top and Gusset Assembly | Bisque; All other models |
| | 802247WP | Top and Gusset Assembly | White; All other models |
| 2 | 511036 | Hinge | |
| 3 | 29651 | Bolt | 4 required |
| 4 | 504228 | Top Mounting Bracket | |
| 5 | 503688 | Screw | |
| 6 | 801058 | Rear Control Cabinet | |
| 7 | 44087201 | Nut | |
| 8 | 800915W | Right Control Cabinet Side | White |
| | 800915L | Right Control Cabinet Side | Almond |
| | 800915Q | Right Control Cabinet Side | Bisque |
| 9 | 511277 | Resistor Assembly | Models BDE30FGS171CW01, FEN16A*G4018, FEU17A*F1702 and FEZ17A*F1702 |
| 10 | 502964P | Timer | Models FEN16A*G4018, FEN17A*G3018, FEN17A*G4018, FES16A*G4018, FGN16A*M3013 and FGN17A*M3013 |
| | 505794P | Timer | Models BDG30FGS111CW01 and FGZ17A*F1102 |
| | 505795P | Timer | Models FES17A*F4350 and FGS17A*F3060 |
| | 505796P | Timer | Model FES17A*F3300 |
| | 505797P | Timer and Harness Kit | Models BDE30FGS171CW01, FEU17A*F1702 and FEZ17A*F1702 |
| 11 | 511421W | Control Panel Assembly | |
| 12 | 511656 | Graphic Overlay | Models FEN16A*G4018, FEN17A*G3018, FEN17A*G4018, FES16A*G4018, FGN16A*M3013 and FGN17A*M3013 |
| | 511406 | Graphic Overlay | All other models |
| 13 | 801777 | Control Cabinet Bottom | |
| 14 | 505281 | Disconnect Power Warning Label | Model FGS17A*F3060 |
| | 502511 | Electrical Shock Label | Models FGN16A*M3013 and FGN17A*M3013 |
| 15 | 800930 | Screw | 4 required |
| 16 | 512117W | Timer Knob Assembly | White |
| | 512117Q | Timer Knob Assembly | Bisque |
| 17 | 36701W | Knob Assembly | White |
| | 36701L | Knob Assembly | Almond |
| | 36701Q | Knob Assembly | Bisque |
| 18 | 202128 | Domed Label | Models BDE30FGS171CW01 and BDG30FGS111CW01 |
| | 800921 | Domed Label | Models FES16A*G4018, FES17A*F3300, FES17A*F4350 and FGS17A*F3060 |
| | 800922 | Domed Label | Models FEZ17A*F1702 and FGZ17A*F1102 |
| | 800923 | Domed Label | Model FEU17A*F1702 |
| 19 | 800900WP | Left Control Cabinet Side | White |
| | 800900LP | Left Control Cabinet Side | Almond |
| | 800900QP | Left Control Cabinet Side | Bisque |
| 20 | 70240301 | Screw | 8 required |
| 21 | 70030501 | Expansion Clip | 12 required |
| 22 | 513505 | Fabric Selector Switch | |

*** Add Letter To Designate Color. L - Almond Q - Bisque W - White**

info@zipnasklade.ru
8(800)500-69-51


© Copyright, Alliance Laundry Systems LLC – DO NOT COPY or TRANSMIT

# Control Panel and Controls - Front Control

Models ADE3TFWS431AW01, ADG3TFWS301AW01, CDE4BFGS171CW01, CDG4BFGS111CW01, CEZ68A*F1702, CGZ68A*F1102, ZDE4BFGS171CW01 and ZDG4BFGS111CW01

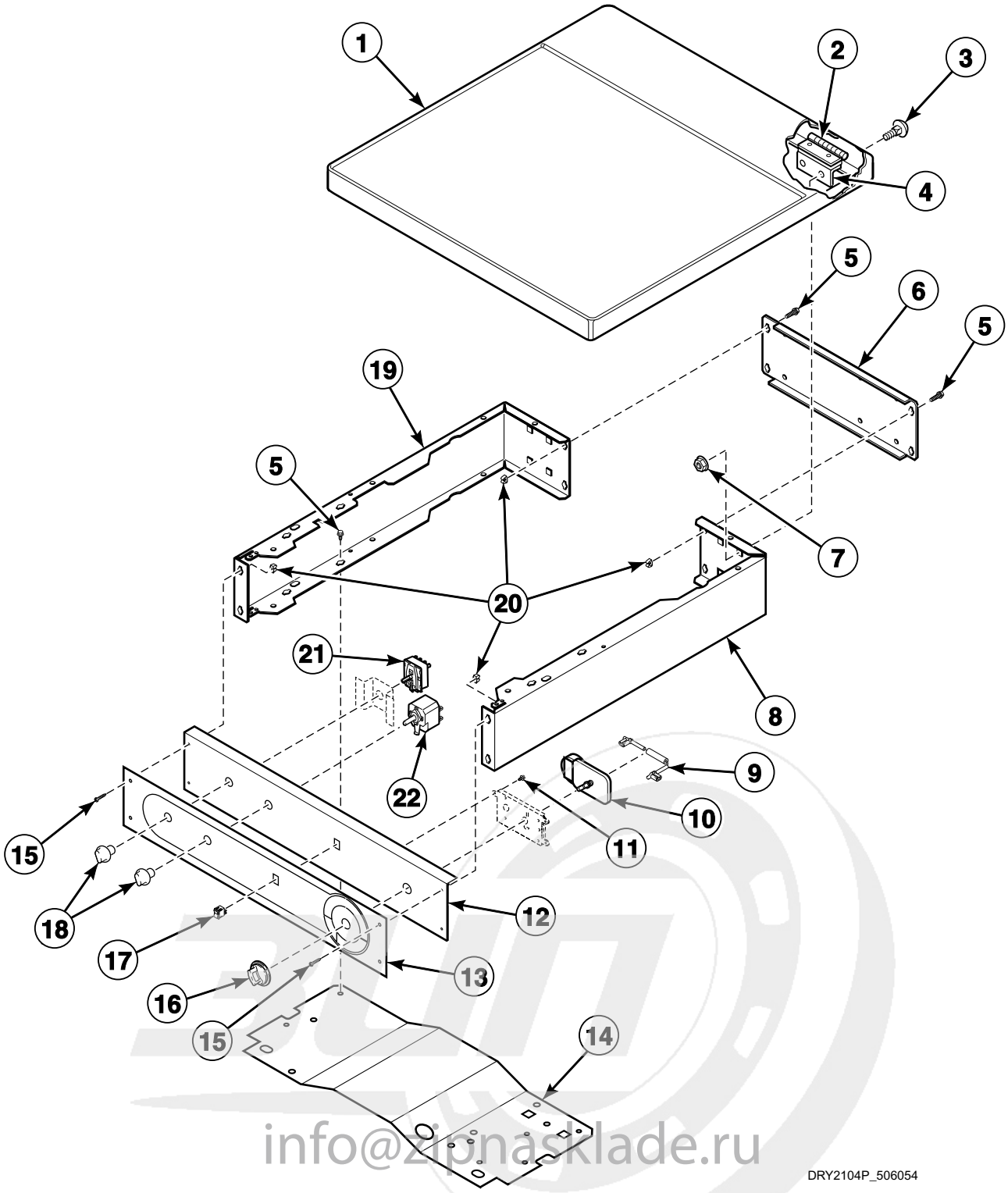


info@zipnasklade.ru
8(800)500-69-51


© Copyright, Alliance Laundry Systems LLC – DO NOT COPY or TRANSMIT

# Control Panel and Controls - Front Control

| REF | PART NO. | DESCRIPTION | COMMENTS |
|---|---|---|---|
| 1 | 802247WP | Top and Gusset Assembly | White |
| | 802247QP | Top and Gusset Assembly | Bisque |
| 2 | 511036 | Hinge | |
| 3 | 29651 | Bolt | 4 required |
| 4 | 504228 | Top Mounting Bracket | |
| 5 | 70240301 | Screw | 8 required |
| 6 | 801058 | Rear Control Cabinet | |
| 7 | 29796 | Nut | 4 required |
| 8 | 800915W | Right Control Cabinet Side | White |
| | 800915Q | Right Control Cabinet Side | Bisque |
| 9 | 511277 | Resistor Assembly | Use with 511150 4 Cycle Timer; Models CDE4BFGS171CW01, CEZ68A*F1702 and ZDE4BFGS171CW01 |
| 10 | 502964P | Timer | Models ADE3TFWS431AW01 and ADG3TFWS301AW01 |
| | 511149P | Timer | Models CDG4BFGS111CW01, CGZ68A*F1102 and ZDG4BFGS111CW01 |
| | 511150P | Timer | Models CDE4BFGS171CW01, CEZ68A*F1702 and ZDE4BFGS171CW01 |
| 11 | 501086 | Screw | |
| 12 | 512067W | Control Panel Assembly | |
| 13 | 513245 | Graphic Overlay | Models ADE3TFWS431AW01 and ADG3TFWS301AW01 |
| | 512751 | Graphic Overlay | Models CEZ68A*F1702 and CGZ68A*F1102 |
| | 511913 | Graphic Overlay | Models CDE4BFGS171CW01 and CDG4BFGS111CW01 |
| | 513019 | Graphic Overlay | Models ZDE4BFGS171CW01 and ZDG4BFGS111CW01 |
| 14 | 801777 | Control Cabinet Bottom | |
| 15 | 800930 | Screw | 4 required |
| 16 | 803118P | Timer Knob Assembly | Models ADE3TFWS431AW01, ADG3TFWS301AW01, ZDE4BFGS171CW01 and ZDG4BFGS111CW01 |
| | 512117W | Timer Knob Assembly | White; All other models |
| | 512117Q | Timer Knob Assembly | Bisque; All other models |
| 17 | 38424W | Rocker Switch | White; All models except ADE3TFWS431AW01 and ADG3TFWS301AW01 |
| | 38424Q | Rocker Switch | Bisque; All models except ADE3TFWS431AW01 and ADG3TFWS301AW01 |
| 18 | 803119P | Control Knob Assembly | Models ADE3TFWS431AW01, ADG3TFWS301AW01, ZDE4BFGS171CW01 and ZDG4BFGS111CW01 |
| | 36701W | Knob Assembly | White; All other models |
| | 36701Q | Knob Assembly | Bisque; All other models |
| 19 | 800900WP | Left Control Cabinet Side | White |
| | 800900QP | Left Control Cabinet Side | Bisque |
| 20 | 70030501 | Expansion Clip | 12 required |
| 21 | 513505 | Fabric Selector Switch | |
| 22 | 504103 | Adjustable Buzzer | Models ADE3TFWS431AW01 and ADG3TFWS301AW01 |
| | 510211 | Buzzer | All other models |

*** Add Letter To Designate Color. Q - Bisque W - White**

info@zipnasklade.ru
8(800)500 69 51


© Copyright, Alliance Laundry Systems LLC – DO NOT COPY or TRANSMIT

# Control Cabinet and Controls

Models ADE32FSS431AN01, ADE32FSS431NN22, ADE32FSS541RN01, ADE41FSS171TN03, ADG32FSS301AN01, ADG41FSS111TN03, ZDE41FSS171CN01 and ZDG41FSS111CN01

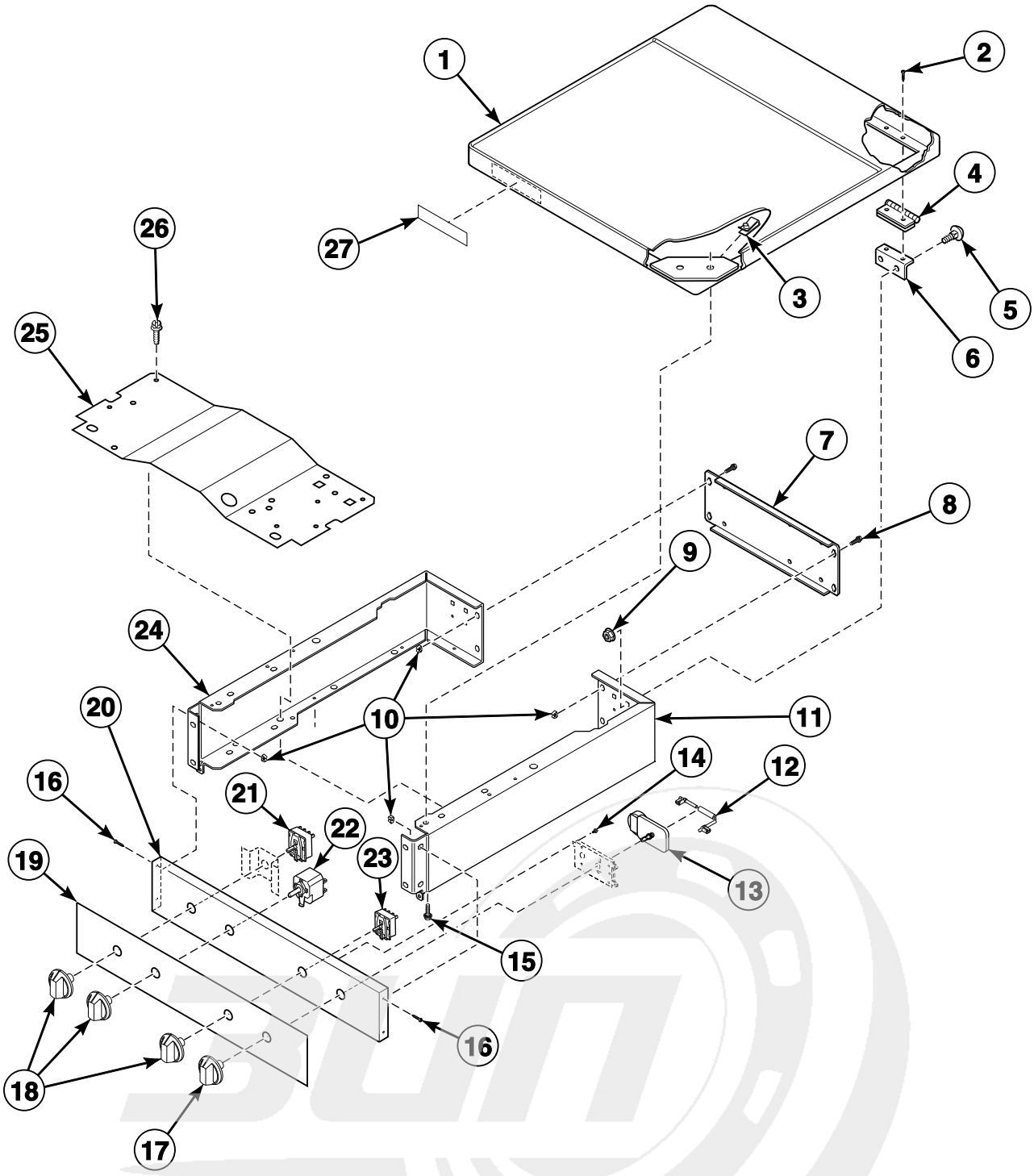


info@zipnasklade.ru
8(800)500-69-51


© Copyright, Alliance Laundry Systems LLC – DO NOT COPY or TRANSMIT

# Control Cabinet and Controls

| REF | PART NO. | DESCRIPTION | COMMENTS |
|---|---|---|---|
| | 513170P | Wire Assembly | Extra tumble |
| 1 | 803144P | Top Kit | Includes items 2, 6, 9 and 4 each of 22649 Screw and 51236 Nut |
| 2 | 685847 | Pop Rivet | |
| 3 | 36020 | Nut | |
| 4 | 511036 | Hinge | |
| 5 | 29651 | Bolt | |
| 6 | 504228 | Top Mounting Bracket | |
| 7 | 801058 | Rear Control Cabinet | |
| 8 | 70240301 | Screw | |
| 9 | 44087201 | Nut | |
| 10 | 70030501 | Expansion Clip | |
| 11 | 803141 | Control Cabinet | Right; Stainless steel |
| | 513701G | Control Cabinet | Right; Gray |
| 12 | 511277 | Resistor Assembly | Use with 511150 4 Cycle Timer; Models ADE41FSS171TN03 and ZDE41FSS171CN01 |
| 13 | 505795P | Timer | Models ADE32FSS431AN01, ADE32FSS431NN22 and ADG32FSS301AN01 |
| | 505796P | Timer | Model ADE32FSS541RN01 |
| | 511149P | Timer | Models ADG41FSS111TN03 and ZDG41FSS111CN01 |
| | 511150P | Timer | Models ADE41FSS171TN03 and ZDE41FSS171CN01 |
| 14 | 501086 | Screw | |
| 15 | 23008 | Screw | |
| 16 | F430956 | Screw | |
| 17 | 803098P | Timer Knob Assembly | |
| 18 | 803099P | Control Knob Assembly | |
| 19 | 513443 | Panel | Models ADE32FSS431AN01, ADE32FSS431NN22, ADE32FSS541RN01 and ADG32FSS301AN01 |
| | 513112 | Panel | Models ADE41FSS171TN03 and ADG41FSS111TN03 |
| | 513093 | Panel | Models ZDE41FSS171CN01 and ZDG41FSS111CN01 |
| 20 | 513161 | Control Panel Assembly | |
| 21 | 513506 | Fabric Selector Switch | |
| 22 | 504103 | Adjustable Buzzer | Models ADE32FSS431AN01, ADE32FSS431NN22, ADE32FSS541RN01 and ADG32FSS301AN01 |
| | 510211 | Buzzer | All other models |
| 23 | 803568 | Selector Switch | Models ADE41FSS171TN03, ADG41FSS111TN03, ZDE41FSS171CN01 and ZDG41FSS111CN01 |
| 24 | 803142 | Control Cabinet | Left; Stainless steel |
| | 513702G | Control Cabinet | Left; Gray |
| 25 | 801777 | Control Cabinet Bottom | |
| 26 | M405188 | Screw | Use with stainless steel cabinet |
| | 503688 | Screw | |
| 27 | 803013 | Badge | Models ADE32FSS431AN01, ADE32FSS431NN22, ADE32FSS541RN01, ADE41FSS171TN03, ADG32FSS301AN01 and ADG41FSS111TN03 |
| | 803101 | Badge | Models ZDE41FSS171CN01 and ZDG41FSS111CN01 |

info@zipnasklade.ru
8(800)500 69 51


© Copyright, Alliance Laundry Systems LLC – DO NOT COPY or TRANSMIT

# Cabinet Top and Control Hood Rear Panel - Rear Control Models

All Models Except ADE3TFWS431AW01, ADE32FSS431AN01, ADE32FSS431NN22, ADE32FSS541RN01, ADE41FSS171TN03, ADG3TFWS301AW01, ADG32FSS301AN01, ADG41FSS111TN03, BDE30FGS171CW01, BDG30FGS111CW01, CDE4BFGS171CW01, CDG4BFGS111CW01, CEZ68A*F1702, CGZ68A*F1102, FEN16A*G4018, FEN17A*G3018, FEN17A*G4018, FES16A*G4018, FES17A*F3300, FES17A*F4350, FEU17A*F1702, FEZ17A*F1702, FGN16A*M3013, FGN17A*M3013, FGS17A*F3060, FGZ17A*F1102, ZDE41FSS171CN01, ZDE4BFGS171CW01, ZDG41FSS111CN01 and ZDG4BFGS111CW01

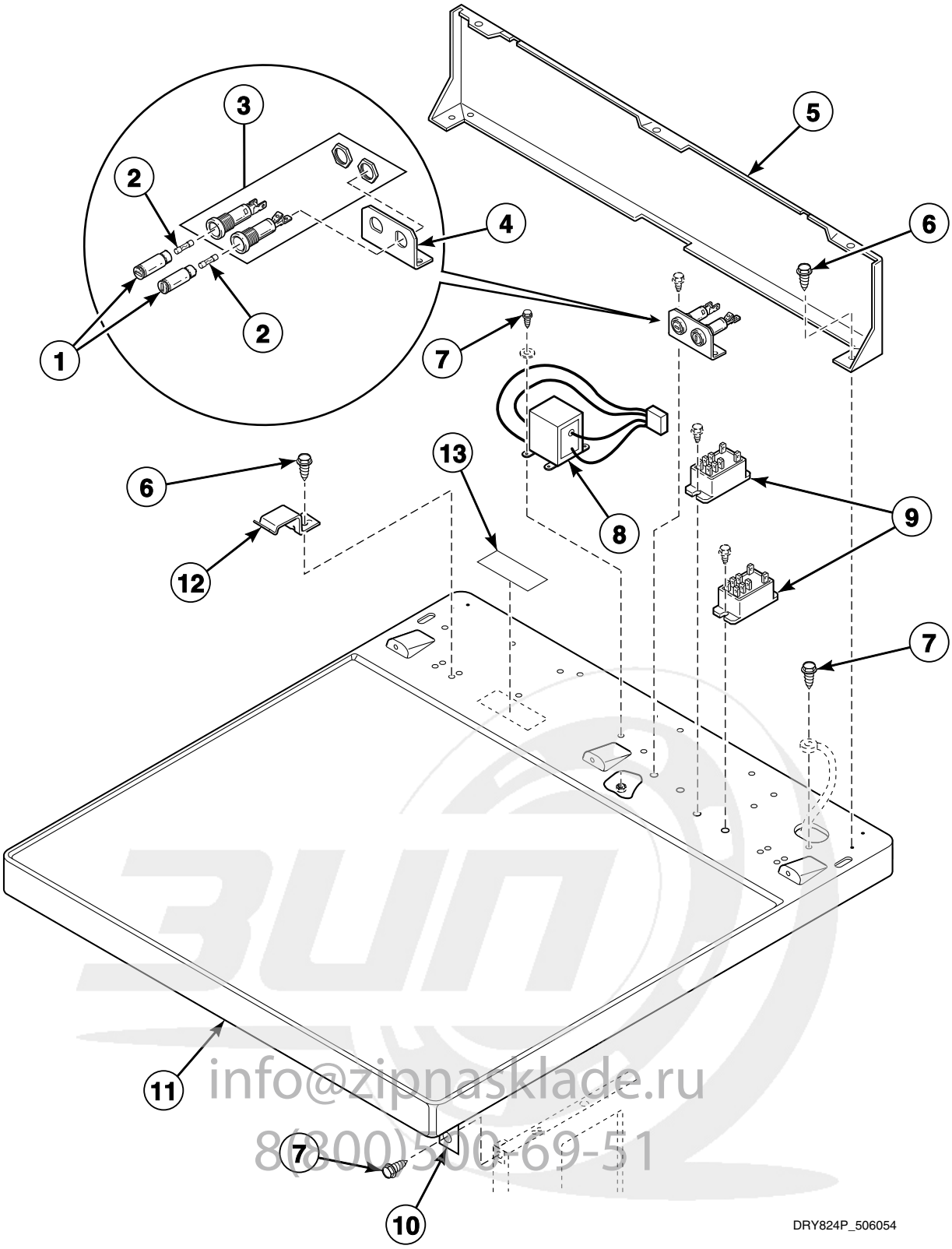


info@zippasklade.ru
8(800)500-69-51


© Copyright, Alliance Laundry Systems LLC – DO NOT COPY or TRANSMIT

# Cabinet Top and Control Hood Rear Panel - Rear Control Models

| REF | PART NO. | DESCRIPTION | COMMENTS |
|---|---|---|---|
| | 511303 | Wire Harness Assembly | Transformer adapter; Includes 502592 Fuse (3.15 Amp, 250 Volt); Models ADG3TRWS301AW01, LGH37A*F5423, LGK37A*F3060, LGN27A*M3008, LGN27A*M3013, LGN37A*M3013, LGS17A*M3020, LGS17A*M3082, LGS27A*M3013, LGS27A*M3080, LGS37A*F3022, LGS37A*F3060, LGS37A*F3080, LGS37A*F5412, LGS37A*F5423, LGS37A*M3013, LGS37A*M3080, LGS38A*M3013, LGS38A*M3020, LGS40A*M3020, LGZ27A*M3013 and LGZ37A*M3013 |
| **1** | 502811 | Fuse Carrier | Models LGS37A*G3013, LGS37A*G3080 and LGZ37A*G3013 |
| **2** | 502593 | Fuse | 400 mA; 1 required; Models LGS37A*G3013, LGS37A*G3080 and LGZ37A*G3013 |
| | 502592 | Fuse | 3.15 Amp; 1 required; Models LGS37A*G3013, LGS37A*G3080 and LGZ37A*G3013 |
| **3** | 502591P | Fuse Holder Kit | Models LGS37A*G3013, LGS37A*G3080 and LGZ37A*G3013 |
| **4** | 502589 | Fuse Holder Bracket | Models LGS37A*G3013, LGS37A*G3080 and LGZ37A*G3013 |
| **5** | 510099 | Hood Back Panel | |
| **6** | 501086 | Screw | |
| **7** | 503688 | Screw | |
| **8** | 511658P | Transformer Kit | Models ADG3TRWS301AW01, FDG3TRGS301NW10, LGH37A*F5423, LGK37A*F3060, LGN27A*M3008, LGN27A*M3013, LGN37A*M3013, LGS17A*F3020, LGS17A*F3081, LGS17A*M3020, LGS17A*M3082, LGS27A*M3013, LGS27A*M3080, LGS37A*F3000, LGS37A*F3022, LGS37A*F3028, LGS37A*F3060, LGS37A*F3080, LGS37A*F5412, LGS37A*F5423, LGS37A*G3013, LGS37A*G3080, LGS37A*M3013, LGS37A*M3080, LGS38A*M3013, LGS38A*M3020, LGS40A*M3020, LGZ27A*M3013, LGZ37A*F3000, LGZ37A*G3013 and LGZ37A*M3013 |
| **9** | 502501 | Relay | |
| **10** | 510146 | Bracket | |
| **11** | 510029WP | Top Panel Kit | White; Includes 2 of item 7 |
| | 510029G | Top Panel | Gray |
| | 510029LP | Top Panel Kit | Almond; Includes 2 of item 7 |
| **12** | 35358 | Hold-Down Clip | |
| **13** | 505281 | Disconnect Power Warning Label | |

*** Add Letter To Designate Color. G - Gray L - Almond Q - Bisque W - White**

info@zipnasklade.ru
8(800)500-69-51


© Copyright, Alliance Laundry Systems LLC – DO NOT COPY or TRANSMIT

# Loading Door (Drawing 1 of 2)

Models ADE32FSS431AN01, ADE32FSS431NN22, ADE32FSS541RN01, ADE41FSS171TN03, ADG32FSS301AN01, ADG41FSS111TN03, ZDE41FSS171CN01 and ZDG41FSS111CN01

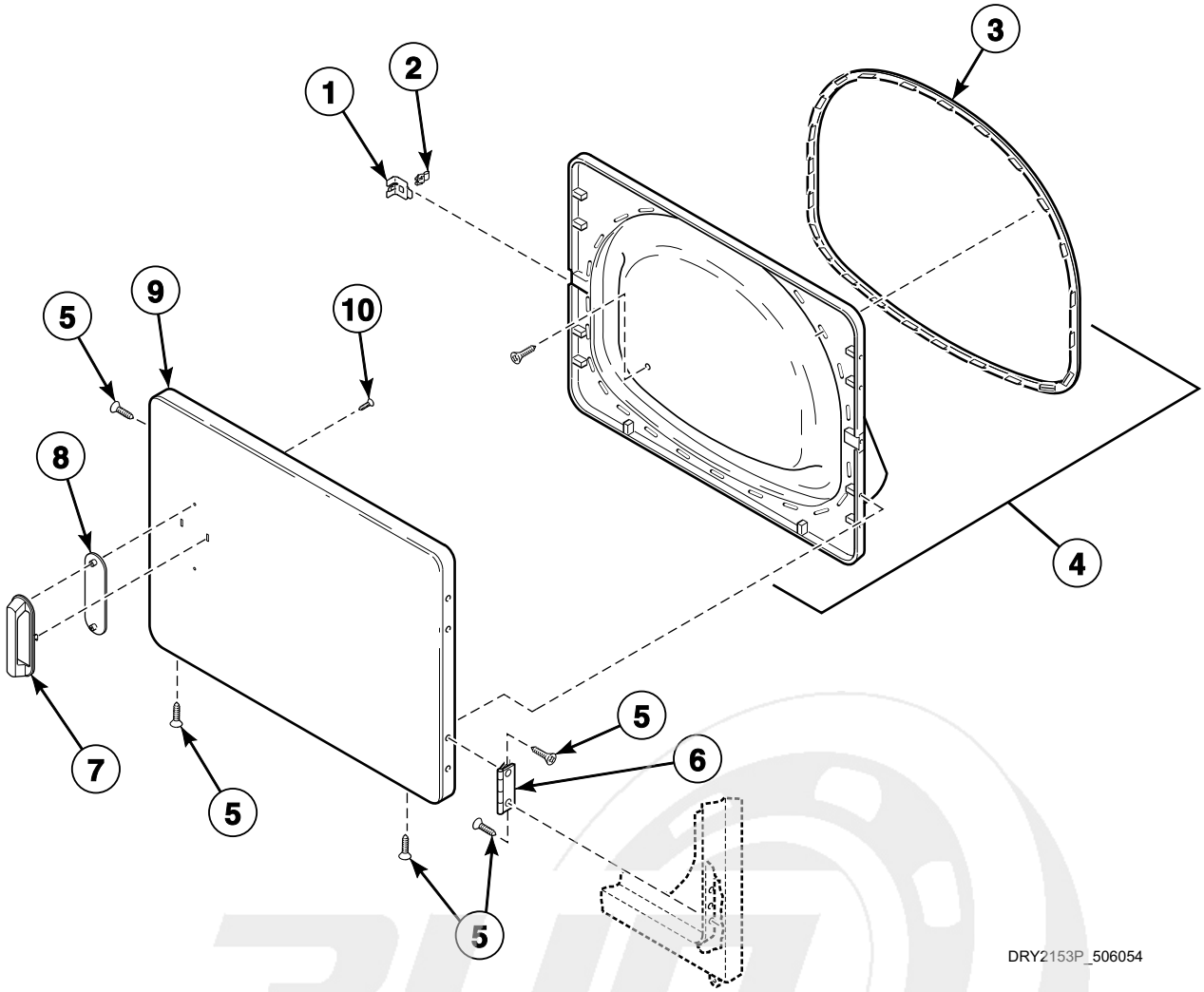


info@zipnasklade.ru
8(800)500-69-51


© Copyright, Alliance Laundry Systems LLC – DO NOT COPY or TRANSMIT

# Loading Door (Drawing 1 of 2)

| REF | PART NO. | DESCRIPTION | COMMENTS |
|---|---|---|---|
| **1** | 510127 | Door Strike Mount | |
| **2** | 510181 | Door Strike | |
| **3** | 510147P | Liner Door Seal | |
| **4** | 513109P | Liner, Seal and Grill Assembly | Gray |
| **5** | 505295 | Screw | |
| **6** | 511036 | Hinge | |
| **7** | 803095 | Door Handle | |
| **8** | 803094P | Handle Cover | |
| **9** | 513156 | Dryer Door | |
| **10** | 800548 | Screw | |

info@zipnasklade.ru
8(800)500-69-51


© Copyright, Alliance Laundry Systems LLC – DO NOT COPY or TRANSMIT

# Loading Door (Drawing 2 of 2)

All Models Except ADE32FSS431AN01, ADE32FSS431NN22, ADE32FSS541RN01, ADE41FSS171TN03, ADG32FSS301AN01, ADG41FSS111TN03, ZDE41FSS171CN01 and ZDG41FSS111CN01

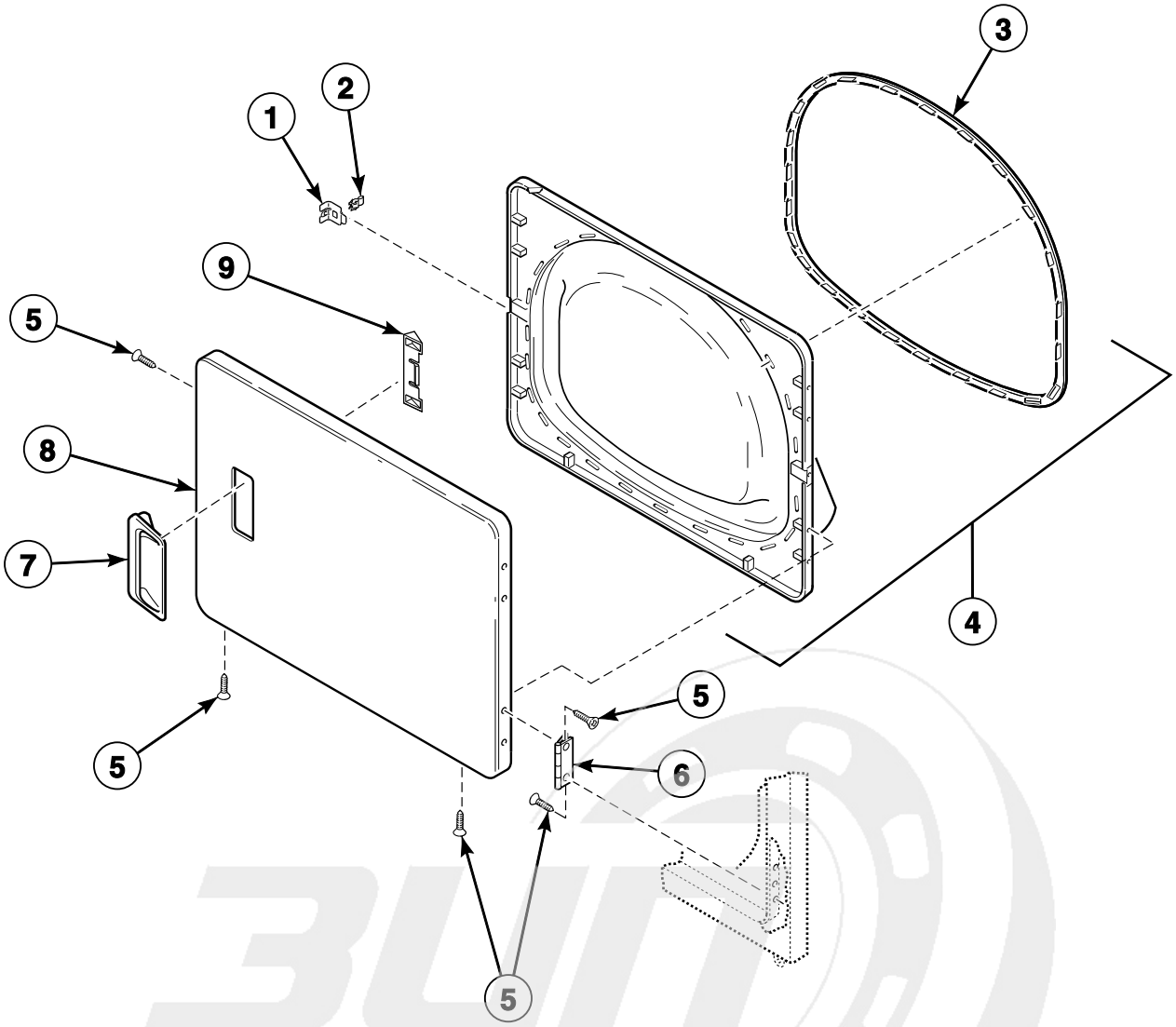


DRY1874P_506054

info@zipnasklade.ru
8(800)500-69-51


© Copyright, Alliance Laundry Systems LLC – DO NOT COPY or TRANSMIT

# Loading Door (Drawing 2 of 2)

| REF | PART NO. | DESCRIPTION | COMMENTS |
|---|---|---|---|
| 1 | 510127 | Door Strike Mount | |
| 2 | 510181 | Door Strike | |
| 3 | 510147P | Liner Door Seal | |
| 4 | 513109P | Liner, Seal and Grill Assembly | Gray; Models BDE30FGS171CW01, LES37A*F3300, MDE3TRWS331TW06, ZDE30RGS171CW01, ZDE3LRGS171CW01, ZDE4BFGS171CW01 and ZDE4BRGS171CW01; Models starting Serial No. 1303025315 |
| | 510163WP | Liner, Seal and Grill Assembly | Models BDE30FGS171CW01, LES37A*F3300, MDE3TRWS331TW06, ZDE30RGS171CW01, ZDE3LRGS171CW01, ZDE4BFGS171CW01 and ZDE4BRGS171CW01 through Serial No. 1303025314; All other models |
| 5 | 505295 | Screw | |
| 6 | 511036 | Hinge | |
| 7 | 511213P | Door Pull and Wedge Kit | Black; Includes item 9; Models LEN27A*G3008, LEN27A*G4008, LEN27A*G99M3, LES28A*G4018 and LGN27A*M3008 |
| | 510103WP | Door Pull and Wedge Kit | White; Includes item 9; All other models |
| | 510103LP | Door Pull and Wedge Kit | Almond; Includes item 9; All other models |
| | 510103QP | Door Pull and Wedge Kit | Bisque; Includes item 9; All other models |
| 8 | 510013WP | Dryer Door | White |
| | 510013GP | Dryer Door | Gray |
| | 510013LP | Dryer Door | Almond |
| | 510013QP | Dryer Door | Bisque |
| 9 | 510129 | Door Handle Wedge | |

*** Add Letter To Designate Color. G - Gray L - Almond Q - Bisque W - White**

info@zipnasklade.ru
8(800)500-69-51


© Copyright, Alliance Laundry Systems LLC – DO NOT COPY or TRANSMIT

# Front Panel and Seal

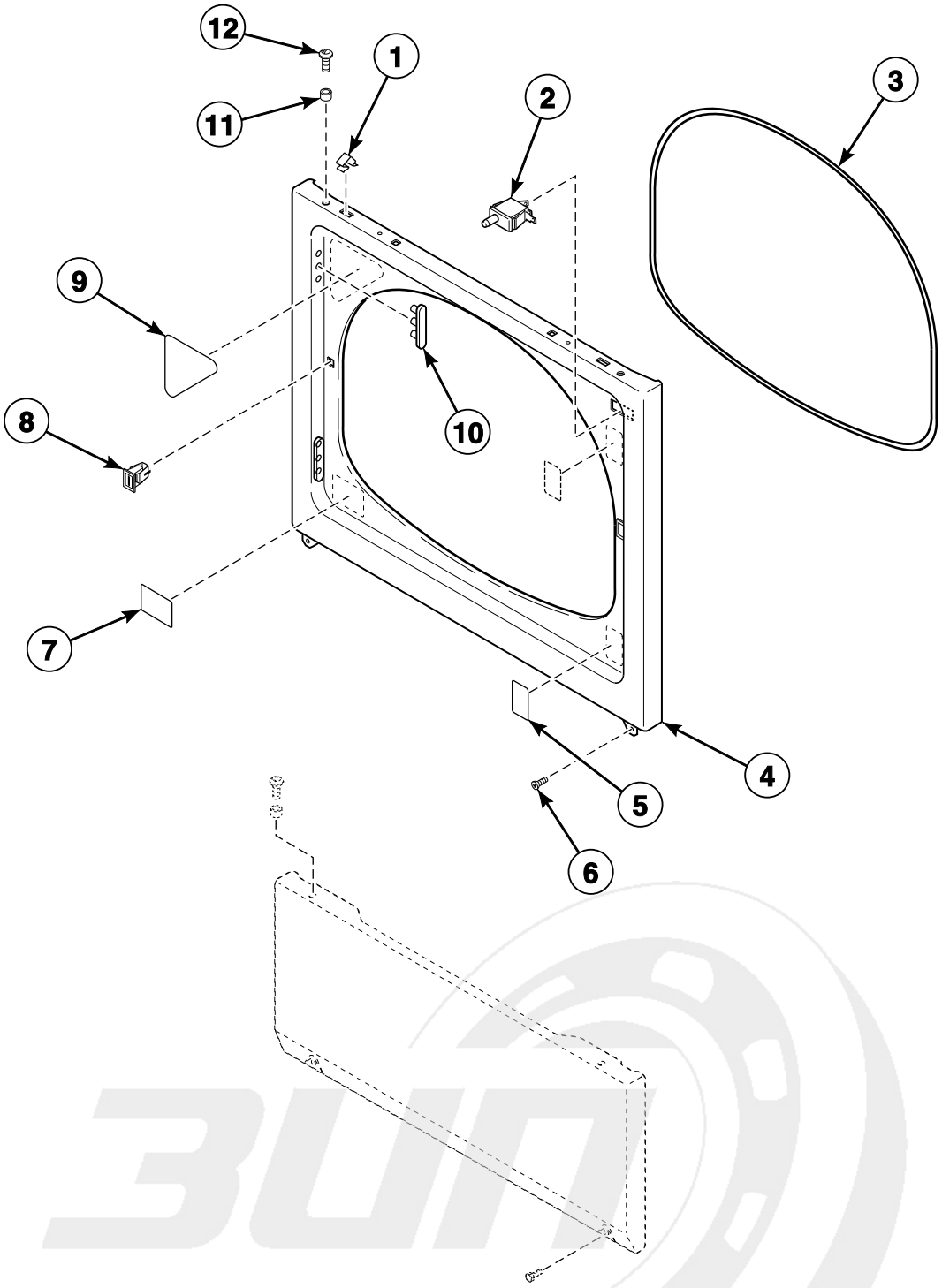


DRY2305P_506054

info@zipnasklade.ru
8(800)500-69-51


© Copyright, Alliance Laundry Systems LLC – DO NOT COPY or TRANSMIT

# Front Panel and Seal

| REF | PART NO. | DESCRIPTION | COMMENTS |
|---|---|---|---|
| 1 | 28835 | Speed Clip | All models except ADG32FSS301AN01, BDG30FGS111CW01, FEN16A*G4018, FEN17A*G3018, FEN17A*G4018, FES16A*G4018, FES17A*F3300, FES17A*F4350, FEU17A*F1702, FEZ17A*F1702, FGN16A*M3013, FGN17A*M3013, FGS17A*F3060 and FGZ17A*F1102 |
| 2 | 512973 | Switch | |
| 3 | 511056 | Front Panel Seal | |
| 4 | 512542 | Front Panel | Stainless steel; Models ADE32FSS431AN01, ADE32FSS431NN22, ADE32FSS541RN01, ADE41FSS171TN03, ADG32FSS301AN01, ADG41FSS111TN03, ZDE41FSS171CN01 and ZDG41FSS111CN01 |
| | 510066WP | Front Panel | White; All other models |
| | 510066LP | Front Panel | Almond; All other models |
| | 510066QP | Front Panel | Bisque; All other models |
| | 510066GP | Front Panel | Gray; All other models |
| 5 | 512263 | Warning Label | Models ADE3TFWS431AW01, ADE3TRWS431AW01, ADE32FSS431AN01, ADG3TFWS301AW01, ADG3TRWS301AW01, ADG32FSS301AN01, FES17A*F4350, FGS17A*F3060, LEG37A*F4350, LEK37A*F4350, LES37A*F4350, LGG37A*F3058, LGK37A*F3058, LGK37A*F3060, LGS37A*F3058 and LGS37A*F3060 |
| 6 | 503688 | Screw | |
| 7 | 502804 | Clean Lint Label | Models ADE3TFWS431AW01, ADE3TRWS431AW01, ADE32FSS431AN01, ADG3TFWS301AW01, ADG3TRWS301AW01, ADG32FSS301AN01, FES17A*F4350, FGS17A*F3060, LEG37A*F4350, LEK37A*F4350, LES37A*F4350, LGG37A*F3058, LGK37A*F3058, LGK37A*F3060, LGS37A*F3058 and LGS37A*F3060 |
| | 502781 | Lint Filter Label | Model LES17A*M4588 |
| 8 | 514113 | Door Catch Assembly | |
| 9 | 500253 | Caution Label | French; Models AEZ17A*F1702, AEZ28A*F1702, AEZ68A*F1702, AGZ17A*F1102, AGZ28A*F1102, AGZ68A*F1102, BDE30FGS171CW01, BDG30FGS111CW01, CDE3LRGS171CW01, CDE4BFGS171CW01, CDG3LRGS111CW01, CDG4BFGS111CW01, CEZ68A*F1702, CGZ68A*F1102, FEU17A*F1702, FEZ17A*F1702, FGZ17A*F1102, LEB07A*F1709, LED17A*F1700, LET57A*F1700, LET67A*F1700, LET68A*F1700, LEY47A*F1709, LEZ27A*F1502, LEZ27A*F1702, LEZ37A*F1702, LEZ57A*F1702, LEZ67A*F1702, LGT57A*F1100, LGT68A*F1100, LGY47A*F1109, LGZ27A*F1102, LGZ37A*F1102, LGZ57A*F1102, LGZ67A*F1102, ZDE30RGS171CW01, ZDE3LRGS171CW01, ZDE41FSS171CN01, ZDE4BFGS171CW01, ZDE4BRGS171CW01, ZDG30RGS111CW01, ZDG3LRGS111CW01, ZDG41FSS111CN01, ZDG4BFGS111CW01 and ZDG4BRGS111CW01 |
| | 505809 | Warning Label | Spanish; Model LGS17A*K1180 |
| | 500281 | Warning/Caution Label | English; All other models |
| 10 | 510186 | Hinge Hole Plug | |
| 11 | 56079 | Panel Locator | |
| 12 | 39733 | Screw | |

*** Add Letter To Designate Color. G - Gray L - Almond Q - Bisque W - White**

info@zipnasklade.ru
8(800)500-69-51


© Copyright, Alliance Laundry Systems LLC – DO NOT COPY or TRANSMIT

# Access Panel

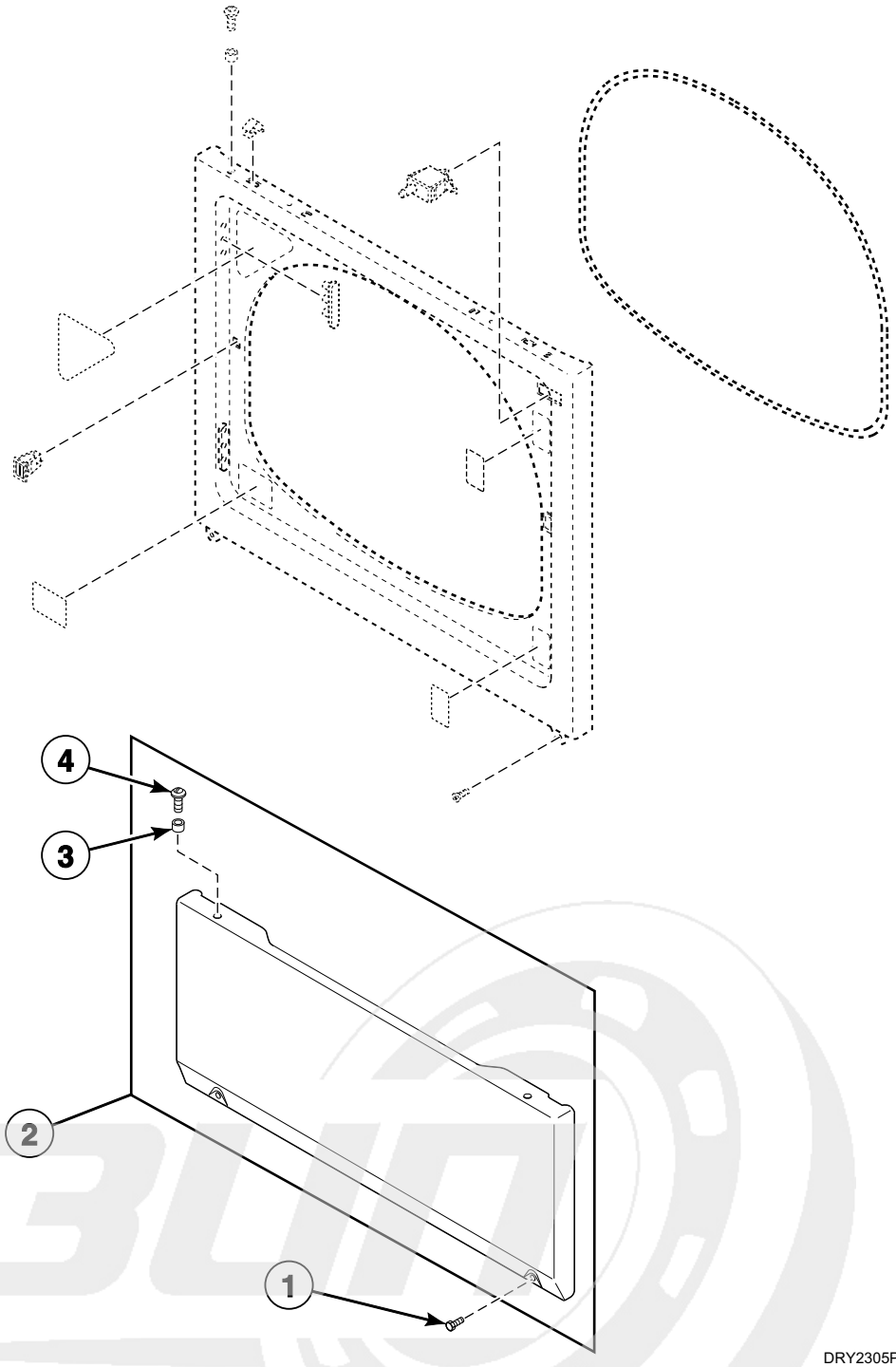


DRY2305PA_506054

info@zipnasklade.ru
8(800)500-69-51


© Copyright, Alliance Laundry Systems LLC – DO NOT COPY or TRANSMIT

# Access Panel

| REF | PART NO. | DESCRIPTION | COMMENTS |
|---|---|---|---|
| 1 | 33562 | Screw | Slotted hex head |
| 2 | 514251 | Access Panel Assembly | Stainless steel; Models ADE41FSS171TN03 and ZDE41FSS171CN01 through Serial No. 1303025314; Models ADE32FSS431AN01, ADE32FSS431NN22, ADE32FSS541RN01, ADG32FSS301AN01, ADG41FSS111TN03 and ZDG41FSS111CN01 |
| | 514253 | Access Panel and Guard Assembly | Stainless steel; Models ADE41FSS171TN03 and ZDE41FSS171CN01 starting Serial No. 1303025315 |
| | 514252W | Access Panel and Guard Assembly | White; Models BDE30FGS171CW01, LES37A*F3300, MDE3TRWS331TW06, ZDE30RGS171CW01, ZDE3LRGS171CW01, ZDE4BFGS171CW01 and ZDE4BRGS171CW01; Starting Serial No. 1303025315 |
| | 514252Q | Access Panel and Guard Assembly | Bisque; Models BDE30FGS171CW01, LES37A*F3300, MDE3TRWS331TW06, ZDE30RGS171CW01, ZDE3LRGS171CW01, ZDE4BFGS171CW01 and ZDE4BRGS171CW01; Starting Serial No. 1303025315 |
| | 514250W | Access Panel Assembly | White; Models BDE30FGS171CW01, LES37A*F3300, MDE3TRWS331TW06, ZDE30RGS171CW01, ZDE3LRGS171CW01, ZDE4BFGS171CW01 and ZDE4BRGS171CW01 through Serial No. 1303025314; All other models |
| | 510069LP | Access Panel | Almond; All other models |
| | 514250Q | Access Panel Assembly | Bisque; Models BDE30FGS171CW01, LES37A*F3300, MDE3TRWS331TW06, ZDE30RGS171CW01, ZDE3LRGS171CW01, ZDE4BFGS171CW01 and ZDE4BRGS171CW01 through Serial No. 1303025314; All other models |
| | 514250G | Access Panel Assembly | Gray; All other models |
| 3 | 56079 | Panel Locator | |
| 4 | 39733 | Screw | |

*** Add Letter To Designate Color. G - Gray L - Almond Q - Bisque W - White**

info@zipnasklade.ru
8(800)500-69-51


© Copyright, Alliance Laundry Systems LLC – DO NOT COPY or TRANSMIT

# Motor, Exhaust Fan and Belt (Drawing 1 of 2)

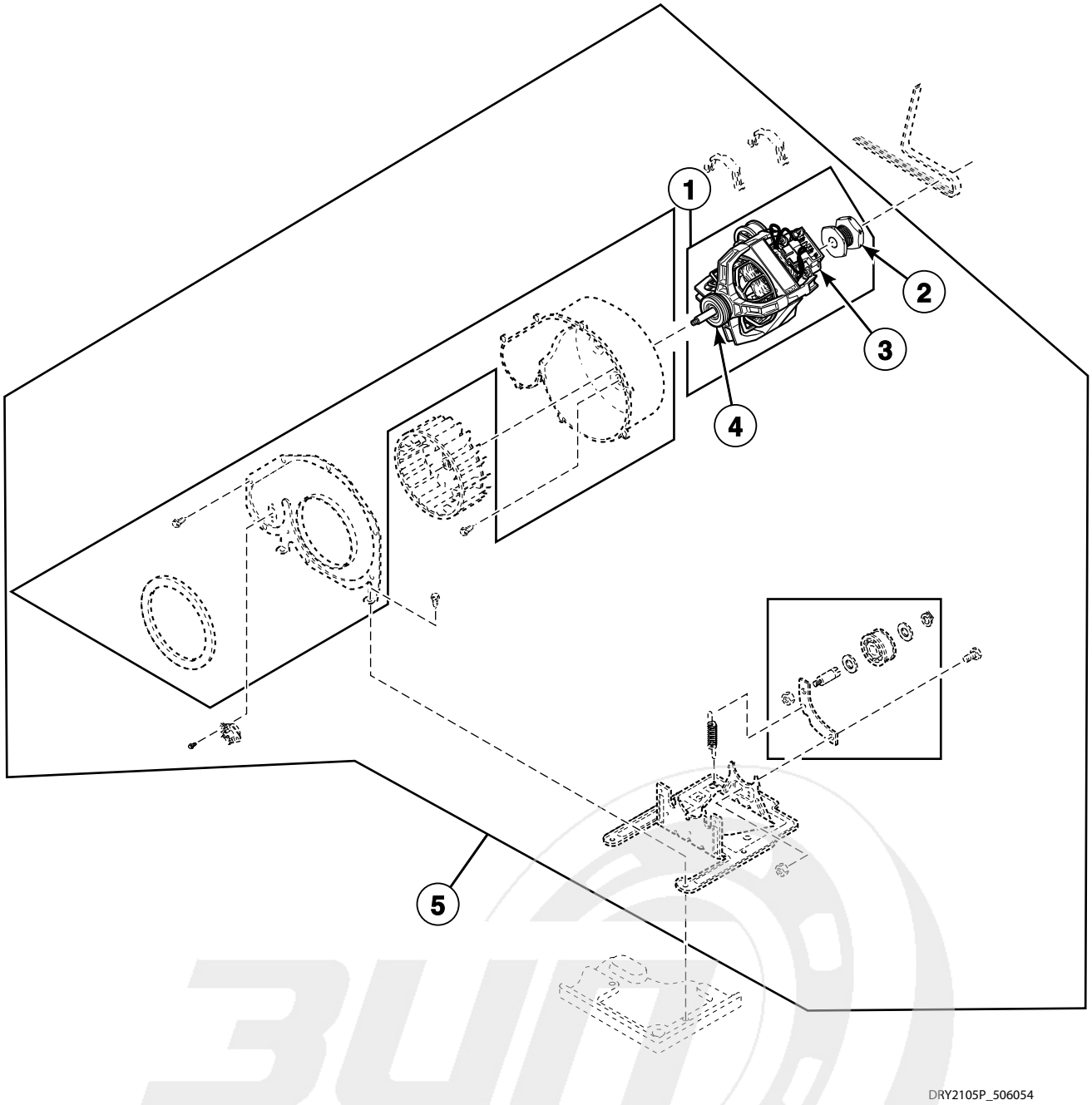


info@zipnasklade.ru
8(800)500-69-51


© Copyright, Alliance Laundry Systems LLC – DO NOT COPY or TRANSMIT

# Motor, Exhaust Fan and Belt (Drawing 1 of 2)

| REF | PART NO. | DESCRIPTION | COMMENTS |
|---|---|---|---|
| | 27604P | Anti-Seize Compound | Apply to motor shaft when installing blower fan assembly |
| 1 | 511629P | Motor and Pulley Assembly | 120 Volt/60 Hertz; Includes items 2 and 3; Apply anti-seize compound to motor shaft when installing blower fan assembly; Models ADE41FSS171TN03, ADG41FSS111TN03, AEZ17A*F1702, AEZ28A*F1702, AEZ68A*F1702, AGZ17A*F1102, AGZ28A*F1102, AGZ68A*F1102, BDE30FGS171CW01, BDG30FGS111CW01, CDE3LRGS171CW01, CDE4BFGS171CW01, CDG3LRGS111CW01, CDG4BFGS111CW01, CEZ68A*F1702, CGZ68A*F1102, FEU17A*F1702, FEZ17A*F1702, FGZ17A*F1102, LDG3TRWS111TW05, LEB07A*F1709, LED17A*F1700, LET57A*F1700, LET67A*F1700, LET68A*F1700, LEY47A*F1709, LEZ27A*F1502, LEZ27A*F1702, LEZ37A*F1702, LEZ57A*F1702, LEZ67A*F1702, LGH37A*F1182, LGS17A*K1180, LGT57A*F1100, LGT68A*F1100, LGY47A*F1109, LGZ27A*F1102, LGZ37A*F1102, LGZ57A*F1102, LGZ67A*F1102, MDG3TRWS111TW06, ZDE30RGS171CW01, ZDE3LRGS171CW01, ZDE41FSS171CN01, ZDE4BFGS171CW01, ZDE4BRGS171CW01, ZDG30RGS111CW01, ZDG3LRGS111CW01, ZDG41FSS111CN01, ZDG4BFGS111CW01 and ZDG4BRGS111CW01 |
| | 505869P | Motor and Pulley Assembly | 240 Volt/60 Hertz; Includes items 2 and 3; Apply anti-seize compound to motor shaft when installing blower fan assembly; Models ADE32FSS541RN01, FES17A*F3300, LDE3TRWS331TW05, LEH37A*F3300, LES37A*F3300, LES37A*F3327, LES37A*F5412, LGH37A*F5423, LGS37A*F5412, LGS37A*F5423 and MDE3TRWS331TW06 |
| | 505843P | Motor and Pulley Assembly | 240 Volt/50 Hertz; Includes items 2 and 3; Apply anti-seize compound to motor shaft when installing blower fan assembly; All other models |
| 2 | 500011 | Motor Pulley | 60 Hertz; Use with 511629P Motor and Pulley Assembly or 505869P Motor and Pulley Assembly; Models ADE32FSS541RN01, ADE41FSS171TN03, ADG41FSS111TN03, AEZ17A*F1702, AEZ28A*F1702, AEZ68A*F1702, AGZ17A*F1102, AGZ28A*F1102, AGZ68A*F1102, BDE30FGS171CW01, BDG30FGS111CW01, CDE3LRGS171CW01, CDE4BFGS171CW01, CDG3LRGS111CW01, CDG4BFGS111CW01, CEZ68A*F1702, CGZ68A*F1102, FES17A*F3300, FEU17A*F1702, FEZ17A*F1702, FGZ17A*F1102, LDE3TRWS331TW05, LDG3TRWS111TW05, LEB07A*F1709, LED17A*F1700, LEH37A*F3300, LES37A*F3300, LES37A*F3327, LES37A*F5412, LET57A*F1700, LET67A*F1700, LET68A*F1700, LEY47A*F1709, LEZ27A*F1502, LEZ27A*F1702, LEZ37A*F1702, LEZ57A*F1702, LEZ67A*F1702, LGH37A*F1182, LGH37A*F5423, LGS17A*K1180, LGS37A*F5412, LGS37A*F5423, LGT57A*F1100, LGT68A*F1100, LGY47A*F1109, LGZ27A*F1102, LGZ37A*F1102, LGZ57A*F1102, LGZ67A*F1102, MDE3TRWS331TW06, MDG3TRWS111TW06, ZDE30RGS171CW01, ZDE3LRGS171CW01, ZDE41FSS171CN01, ZDE4BFGS171CW01, ZDE4BRGS171CW01, ZDG30RGS111CW01, ZDG3LRGS111CW01, ZDG41FSS111CN01, ZDG4BFGS111CW01 and ZDG4BRGS111CW01 |
| | 500222 | Motor Pulley | 50 Hertz; Use with 505843P Motor and Pulley Assembly; All other models |
| 3 | N/A | Motor Switch Kit | Does not include thermal protector |
| 4 | 590P3 | Motor Hub Ring Kit | |
| 5 | 510717P | Blower and Fan Kit | 120 Volt/60 Hertz; Includes items 1-4, and 1-4 and 6-18 on *Motor, Exhaust Fan and Belt (Drawing 2 of 2)*; For models that use 511629P Motor and Pulley Assembly |

*** Add Letter To Designate Color. G - Gray L - Almond Q - Bisque W - White**

**N/A = Part no longer available**

info@zipnasklade.ru
8(800)500 6951


© Copyright, Alliance Laundry Systems LLC – DO NOT COPY or TRANSMIT

# Motor, Exhaust Fan and Belt (Drawing 2 of 2)

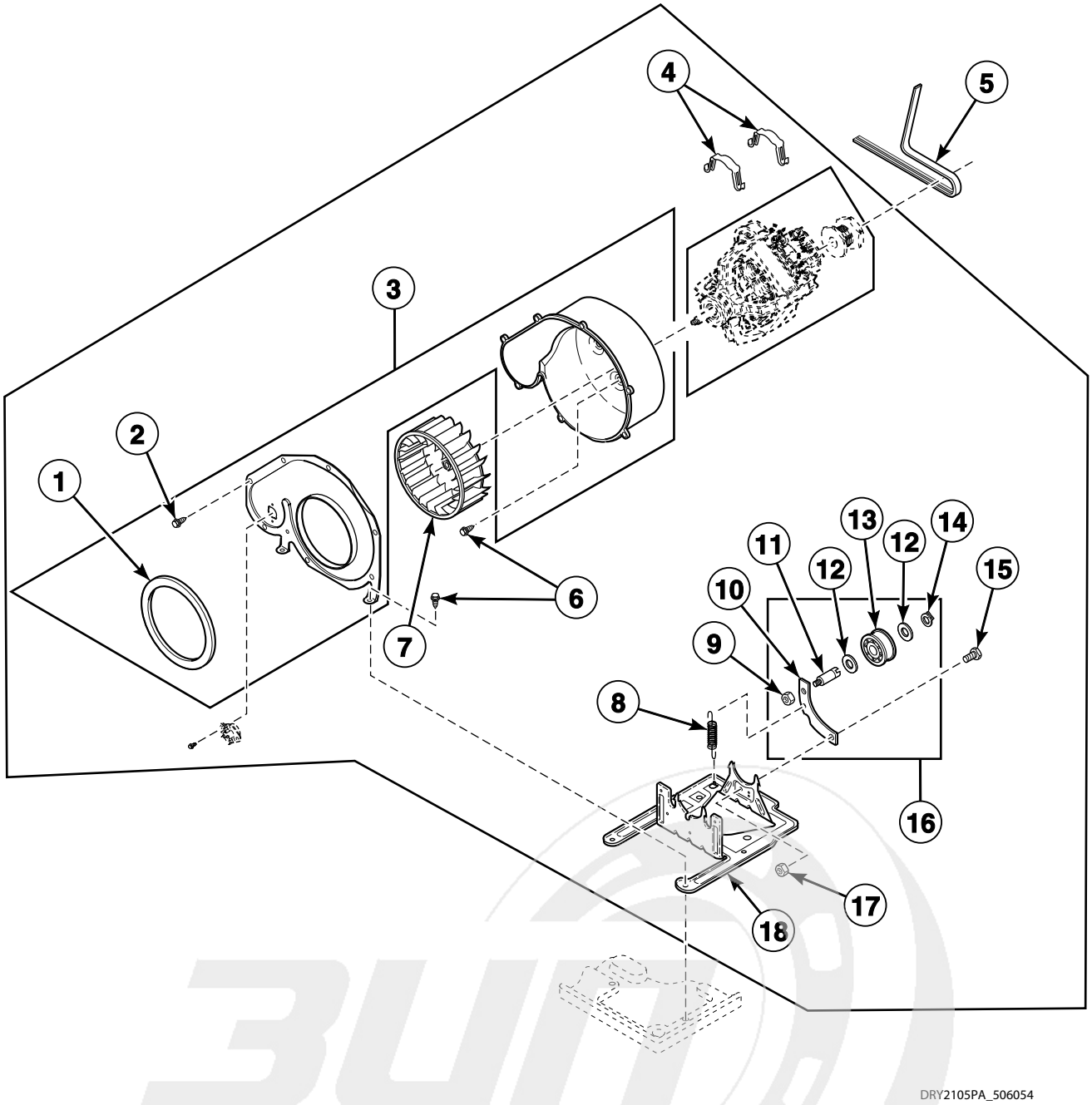


info@zipnasklade.ru
8(800)500-69-51


© Copyright, Alliance Laundry Systems LLC – DO NOT COPY or TRANSMIT

# Motor, Exhaust Fan and Belt (Drawing 2 of 2)

| REF | PART NO. | DESCRIPTION | COMMENTS |
|---|---|---|---|
| | 27604P | Anti-Seize Compound | Apply to motor shaft when installing blower fan assembly |
| 1 | 510238P | Blower Housing Seal | |
| 2 | 31260 | Screw | |
| 3 | 511969WP | Blower Housing | Includes items 1 and 2 |
| 4 | 510180 | Motor Mount Clamp | |
| 5 | 511255P | Cylinder Belt | |
| 6 | 503688 | Screw | |
| 7 | 510139P | Blower Fan Assembly | Apply anti-seize compound to motor shaft when installing blower fan assembly |
| 8 | 510185 | Idler Spring | |
| 9 | 56156 | Nut | |
| 10 | 510133 | Idler Lever | |
| 11 | 56461P | Shaft | |
| 12 | 52549 | Washer | |
| 13 | 510142P | Idler Wheel and Bearing Assembly | |
| 14 | 23748 | Retaining Ring | |
| 15 | 500824 | Screw | |
| 16 | 510158 | Idler Lever and Wheel Assembly | Includes items 9-14 |
| 17 | 52566 | Nut | |
| 18 | 510060 | Motor Mount | |

info@zipnasklade.ru
8(800)500-69-51


© Copyright, Alliance Laundry Systems LLC – DO NOT COPY or TRANSMIT

# Thermostat

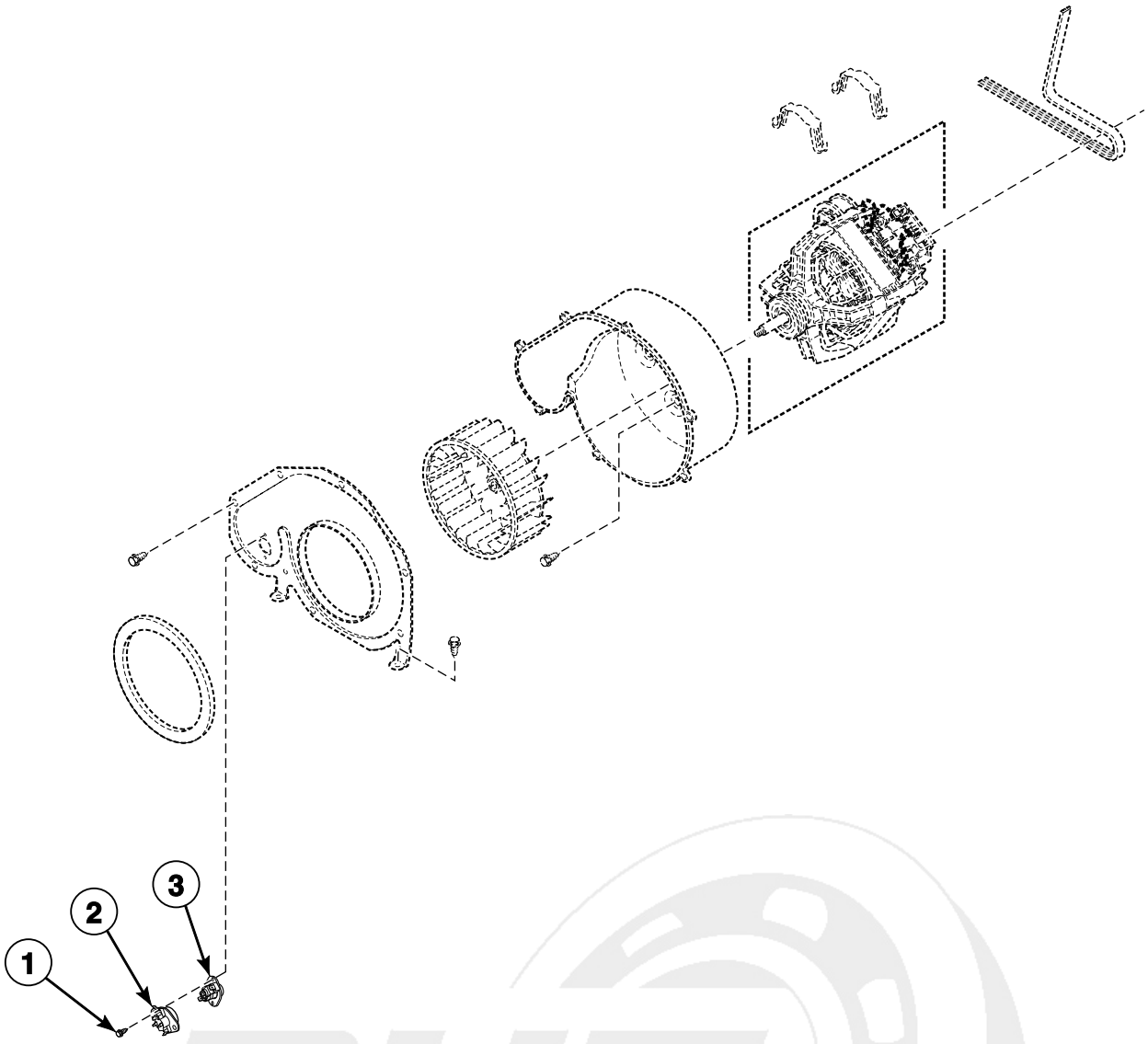


DRY1850P_506054

info@zipnasklade.ru
8(800)500-69-51


© Copyright, Alliance Laundry Systems LLC – DO NOT COPY or TRANSMIT

# Thermostat

| REF | PART NO. | DESCRIPTION | COMMENTS |
|---|---|---|---|
| 1 | 502535 | Screw | |
| 2 | 504515 | Thermostat | Green; Models ADE41FSS171TN03, AEZ17A*F1702, AEZ28A*F1702, AEZ68A*F1702, BDE30FGS171CW01, CDE3LRGS171CW01, CDE4BFGS171CW01, CEZ68A*F1702, FEU17A*F1702, FEZ17A*F1702, LED17A*F1700, LET57A*F1700, LET67A*F1700, LET68A*F1700, LEZ27A*F1502, LEZ27A*F1702, LEZ37A*F1702, LEZ57A*F1702, LEZ67A*F1702, ZDE30RGS171CW01, ZDE3LRGS171CW01, ZDE41FSS171CN01, ZDE4BFGS171CW01 and ZDE4BRGS171CW01 |
| | 504519 | Thermostat | Violet/White; Models LGS37A*G3013, LGS37A*G3080 and LGZ37A*G3013 |
| | 504520 | Thermostat | Pink; Model LES33A*F4562 |
| | 504521 | Thermostat | Yellow/White; Model LES33A*F4562 |
| | 510707P | Thermostat | Pink/White; Models ADG41FSS111TN03, AGZ17A*F1102, AGZ28A*F1102, AGZ68A*F1102, BDG30FGS111CW01, CDG3LRGS111CW01, CDG4BFGS111CW01, CGZ68A*F1102, FGZ17A*F1102, LDG3TRWS111TW05, LGH37A*F1182, LGS17A*K1180, LGT57A*F1100, LGT68A*F1100, LGZ27A*F1102, LGZ37A*F1102, LGZ57A*F1102, LGZ67A*F1102, MDG3TRWS111TW06, ZDG30RGS111CW01, ZDG3LRGS111CW01, ZDG41FSS111CN01, ZDG4BFGS111CW01 and ZDG4BRGS111CW01 |
| | 511957 | Thermostat | White; All other models |
| 3 | M411941 | Manual Reset Thermostat | Models ADG3TFWS301AW01, ADG3TRWS301AW01, ADG32FSS301AN01, FGS17A*F3060, LGK37A*F3060 and LGS37A*F3060 |

*** Add Letter To Designate Color. G - Gray L - Almond Q - Bisque W - White**

info@zipnasklade.ru
8(800)500-69-51


© Copyright, Alliance Laundry Systems LLC – DO NOT COPY or TRANSMIT

# Front Bulkhead, Seal and Air Duct - Without Light

All Models Except ADE32FSS431AN01, ADE32FSS431NN22, ADE32FSS541RN01, ADE41FSS171TN03, ADG32FSS301AN01, ADG41FSS111TN03, AEZ28A*F1702, AEZ68A*F1702, AGZ28A*F1102, AGZ68A*F1102, CDE3LRGS171CW01, CDE4BFGS171CW01, CDG3LRGS111CW01, CDG4BFGS111CW01, CEZ68A*F1702, CGZ68A*F1102, LES28A*G4018, LET57A*F1700, LET67A*F1700, LET68A*F1700, LEY47A*F1709, LEZ57A*F1702, LEZ67A*F1702, LGS38A*M3013, LGS38A*M3020, LGS40A*M3020, LGT57A*F1100, LGT68A*F1100, LGY47A*F1109, LGZ57A*F1102, LGZ67A*F1102, ZDE3LRGS171CW01, ZDE41FSS171CN01, ZDE4BFGS171CW01, ZDE4BRGS171CW01, ZDG3LRGS111CW01, ZDG41FSS111CN01, ZDG4BFGS111CW01 and ZDG4BRGS111CW01

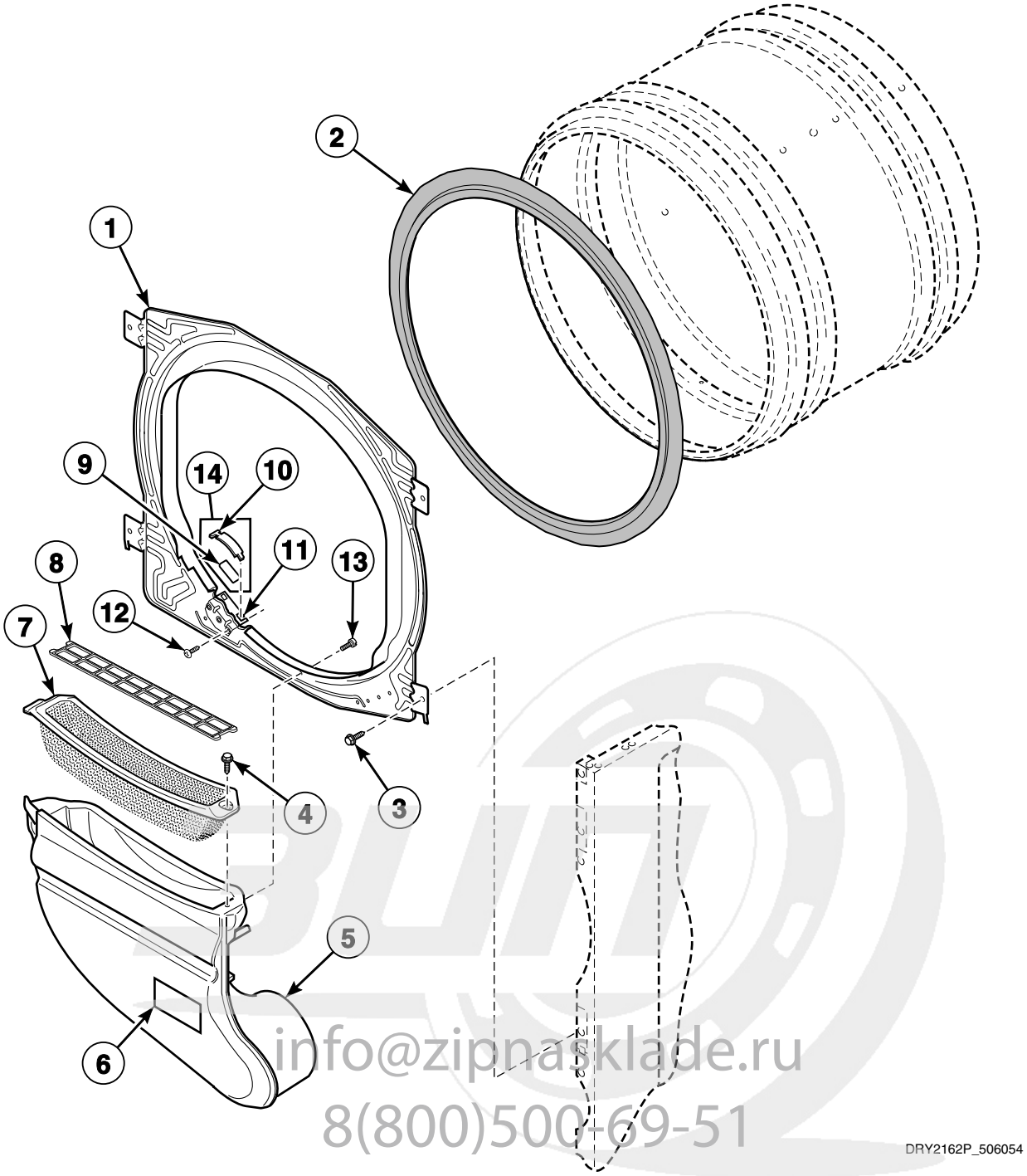


info@zipnasklade.ru
8(800)500-69-51


© Copyright, Alliance Laundry Systems LLC – DO NOT COPY or TRANSMIT

# Front Bulkhead, Seal and Air Duct - Without Light

| REF | PART NO. | DESCRIPTION | COMMENTS |
|---|---|---|---|
| 1 | 510266P | Front Bulkhead Assembly | Unpainted; Includes items 2 and 9-12; Models AEZ17A*F1702, AGZ17A*F1102, BDE30FGS171CW01, BDG30FGS111CW01, FDE3TRGS401NW22, FEN16A*G4018, FEN17A*G3018, FEN17A*G4018, FES16A*G4018, FES17A*F3300, FES17A*F4350, FEU17A*F1702, FEZ17A*F1702, FGN16A*M3013, FGN17A*M3013, FGS17A*F3060, FGZ17A*F1102, LED17A*F1700, LEN27A*G3008, LEN27A*G3018, LEN27A*G4008, LEN27A*G4018, LEN27A*G99M3, LES17A*F3000, LES17A*F3007, LES17A*F3022, LES17A*F4500, LES17A*M4588, LES27A*G3018, LES27A*G4000, LES27A*G4500, LES27A*G4518, LES27A*G4018, LEZ27A*F1502, LEZ27A*F1702, LEZ27A*G3018, LEZ27A*G4018, LGN27A*M3008, LGN27A*M3013, LGS17A*F3020, LGS17A*F3081, LGS17A*K1180, LGS17A*M3020, LGS17A*M3082, LGS27A*M3013, LGS27A*M3080, LGZ27A*F1102, LGZ27A*M3013, ZDE30RGS171CW01 and ZDG30RGS111CW01 |
| | 511033WP | Front Bulkhead Assembly | Painted; Includes items 2 and 9-12; All other models |
| 2 | 510207P | Cylinder Seal Assembly | |
| | 511637P | Adhesive | For cylinder seal |
| | RB170001 | Seal Kit | Includes 2 cylinder seals, 510238P Blower Housing Seal and 511637P Adhesive |
| 3 | 503688 | Screw | |
| 4 | 501285 | Screw | |
| 5 | 510151LG | Air Duct Assembly | Models BDE30FGS171CW01, LES37A*F3300, MDE3TRWS331TW06 and ZDE30RGS171CW01; Models starting Serial No. 1303025315 |
| | 510151W | Air Duct Assembly | Models BDE30FGS171CW01, LES37A*F3300, MDE3TRWS331TW06 and ZDE30RGS171CW01 through Serial No. 1303025314; All other models |
| 6 | 500314 | Warning Label | Models AEZ17A*F1702, AGZ17A*F1102, BDE30FGS171CW01, BDG30FGS111CW01, FEU17A*F1702, FEZ17A*F1702, FGZ17A*F1102, LEB07A*F1709, LED17A*F1700, LEZ27A*F1502, LEZ27A*F1702, LEZ37A*F1702, LGZ27A*F1102, LGZ37A*F1102, ZDE30RGS171CW01 and ZDG30RGS111CW01 |
| | 502506 | Pinched Fingers Label | Model LES17A*M4588 |
| 7 | 503980LG | Lint Filter | Models BDE30FGS171CW01, LES37A*F3300, MDE3TRWS331TW06 and ZDE30RGS171CW01; Models starting Serial No. 1303025315 |
| | 503980W | Lint Filter | Models BDE30FGS171CW01, LES37A*F3300, MDE3TRWS331TW06 and ZDE30RGS171CW01 through Serial No. 1303025314; All other models |
| 8 | 510502LG | Lint Filter Cover | Models BDE30FGS171CW01, LES37A*F3300, MDE3TRWS331TW06 and ZDE30RGS171CW01; Models starting Serial No. 1303025315 |
| | 510502W | Lint Filter Cover | Models BDE30FGS171CW01, LES37A*F3300, MDE3TRWS331TW06 and ZDE30RGS171CW01 through Serial No. 1303025314; All other models |
| 9 | 510189 | Felt Pad | |
| 10 | 510188 | Cylinder Glide | |
| 11 | 510145 | Cylinder Glide Bracket | |
| 12 | 52864 | Screw | |
| 13 | 505295 | Screw | |
| 14 | RB170003 | Glide Kit | Includes items 9 and 10 |

*** Add Letter To Designate Color. G - Gray L - Almond Q - Bisque W - White**

info@zipnasklade.ru
8(800)500-69-51


© Copyright, Alliance Laundry Systems LLC – DO NOT COPY or TRANSMIT

# Front Bulkhead and Seal - With Light

Models ADE32FSS431AN01, ADE32FSS431NN22, ADE32FSS541RN01, ADE41FSS171TN03, ADG32FSS301AN01, ADG41FSS111TN03, AEZ28A*F1702, AEZ68A*F1702, AGZ28A*F1102, AGZ68A*F1102, CDE3LRGS171CW01, CDE4BFGS171CW01, CDG3LRGS111CW01, CDG4BFGS111CW01, CEZ68A*F1702, CGZ68A*F1102, LES28A*G4018, LET57A*F1700, LET67A*F1700, LET68A*F1700, LEY47A*F1709, LEZ57A*F1702, LEZ67A*F1702, LGS38A*M3013, LGS38A*M3020, LGS40A*M3020, LGT57A*F1100, LGT68A*F1100, LGY47A*F1109, LGZ57A*F1102, LGZ67A*F1102, ZDE3LRGS171CW01, ZDE41FSS171CN01, ZDE4BFGS171CW01, ZDE4BRGS171CW01, ZDG3LRGS111CW01, ZDG41FSS111CN01, ZDG4BFGS111CW01 and ZDG4BRGS111CW01

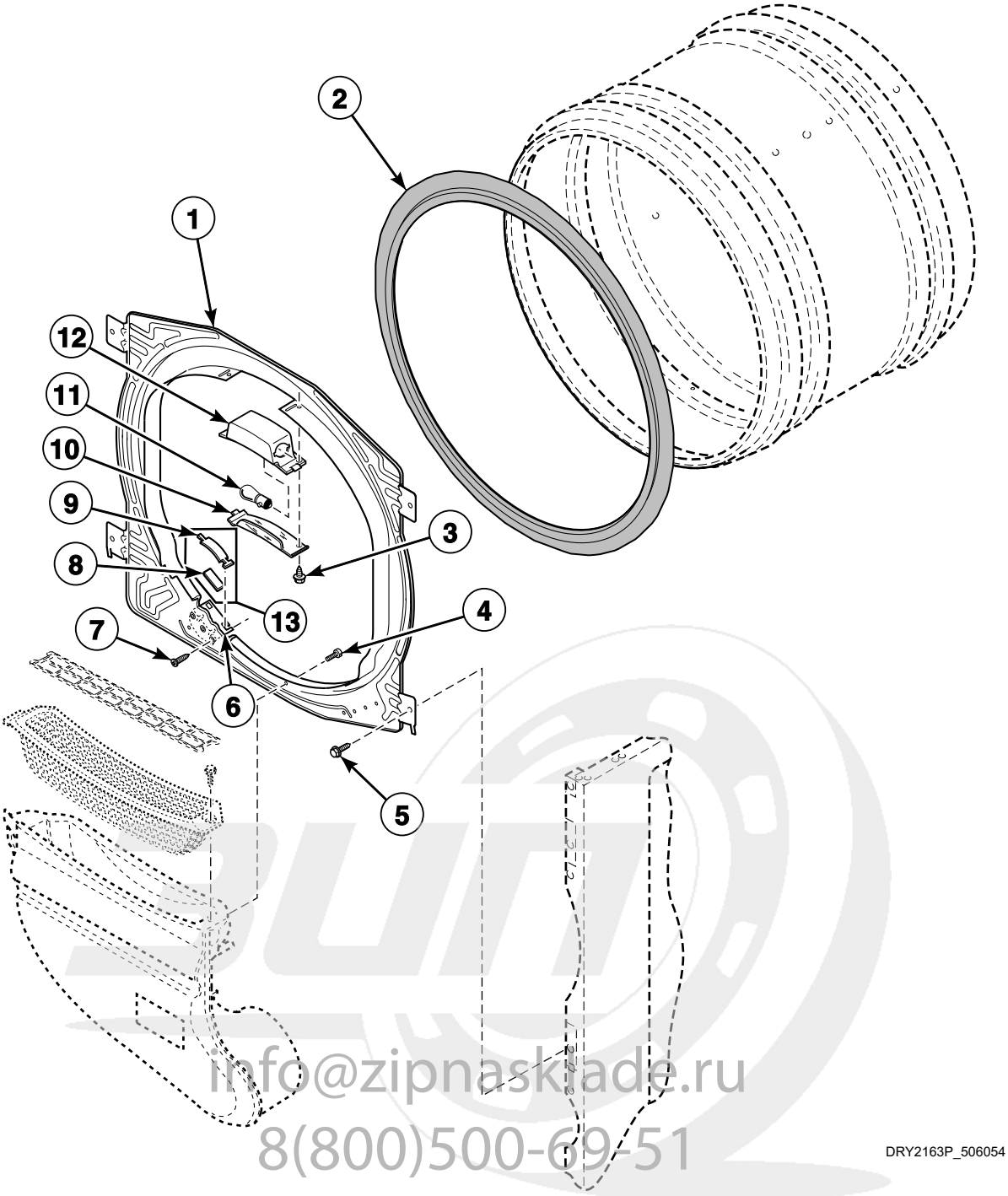


info@zipnaskiade.ru
8(800)500-69-51


© Copyright, Alliance Laundry Systems LLC – DO NOT COPY or TRANSMIT

# Front Bulkhead and Seal - With Light

| REF | PART NO. | DESCRIPTION | COMMENTS |
|---|---|---|---|
| 1 | 512476 | Front Bulkhead Assembly | Galvanized; Includes items 2, 3, and 5-12; 240 Volt Cylinder Light Assembly and Lamp must be ordered separately; Drum Light Lens must be ordered separately for model LES28A*G4018; Models ADE41FSS171TN03, ADG41FSS111TN03, AEZ28A*F1702, AEZ68A*F1702, AGZ28A*F1102, AGZ68A*F1102, CDE3LRGS171CW01, CDE4BFGS171CW01, CDG3LRGS111CW01, CDG4BFGS111CW01, CEZ68A*F1702, CGZ68A*F1102, LES28A*G4018, ZDE3LRGS171CW01, ZDE41FSS171CN01, ZDE4BFGS171CW01, ZDE4BRGS171CW01, ZDG3LRGS111CW01, ZDG41FSS111CN01, ZDG4BFGS111CW01 and ZDG4BRGS111CW01 |
| | 505899WP | Bulkhead Assembly | Painted; Includes items 2, 3, and 5-12; All other models |
| 2 | 510207P | Cylinder Seal Assembly | |
| | 511637P | Adhesive | For cylinder seal |
| | RB170001 | Seal Kit | Includes 2 cylinder seals, 510238P Blower Housing Seal and 511637P Adhesive |
| 3 | 500227 | Screw | |
| 4 | 505295 | Screw | |
| 5 | 503688 | Screw | |
| 6 | 510145 | Cylinder Glide Bracket | |
| 7 | 501086 | Screw | |
| 8 | 510189 | Felt Pad | |
| 9 | 510188 | Cylinder Glide | |
| 10 | 512106 | Cylinder Light Lens | Models ADE32FSS431AN01, ADE32FSS431NN22, ADE32FSS541RN01, ADE41FSS171TN03, ADG32FSS301AN01, ADG41FSS111TN03, AEZ28A*F1702, AEZ68A*F1702, AGZ28A*F1102, AGZ68A*F1102, CDE3LRGS171CW01, CDE4BFGS171CW01, CDG3LRGS111CW01, CDG4BFGS111CW01, CEZ68A*F1702, CGZ68A*F1102, ZDE3LRGS171CW01, ZDE41FSS171CN01, ZDE4BFGS171CW01, ZDE4BRGS171CW01, ZDG3LRGS111CW01, ZDG41FSS111CN01, ZDG4BFGS111CW01 and ZDG4BRGS111CW01 |
| | 503623 | Drum Light Lens | All other models |
| 11 | 503579 | Drum Light Lamp | 240 Volt; Models ADE32FSS431AN01, ADE32FSS431NN22, ADE32FSS541RN01, ADG32FSS301AN01, LES28A*G4018, LGS38A*M3013, LGS38A*M3020 and LGS40A*M3020 |
| | 60954 | Drum Light Lamp | 120 Volt; All other models |
| 12 | 512109 | Cylinder Light Assembly | 240 Volt; Models ADE32FSS431AN01, ADE32FSS431NN22, ADE32FSS541RN01, ADG32FSS301AN01, LES28A*G4018, LGS38A*M3013, LGS38A*M3020 and LGS40A*M3020 |
| | 512108 | Light Housing Assembly | 120 Volt; Includes lamp; All other models |
| 13 | RB170003 | Glide Kit | Includes items 8 and 9 |

*** Add Letter To Designate Color. L - Almond Q - Bisque W - White**

**N/A = Part no longer available**

info@zipnasklad.ru
8(800)500-69-51


© Copyright, Alliance Laundry Systems LLC – DO NOT COPY or TRANSMIT

# Air Duct

Models ADE32FSS431AN01, ADE32FSS431NN22, ADE32FSS541RN01, ADE41FSS171TN03, ADG32FSS301AN01, ADG41FSS111TN03, AEZ28A*F1702, AEZ68A*F1702, AGZ28A*F1102, AGZ68A*F1102, CDE3LRGS171CW01, CDE4BFGS171CW01, CDG3LRGS111CW01, CDG4BFGS111CW01, CEZ68A*F1702, CGZ68A*F1102, LES28A*G4018, LET57A*F1700, LET67A*F1700, LET68A*F1700, LEY47A*F1709, LEZ57A*F1702, LEZ67A*F1702, LGS38A*M3013, LGS38A*M3020, LGS40A*M3020, LGT57A*F1100, LGT68A*F1100, LGY47A*F1109, LGZ57A*F1102, LGZ67A*F1102, ZDE3LRGS171CW01, ZDE41FSS171CN01, ZDE4BFGS171CW01, ZDE4BRGS171CW01, ZDG3LRGS111CW01, ZDG41FSS111CN01, ZDG4BFGS111CW01 and ZDG4BRGS111CW01

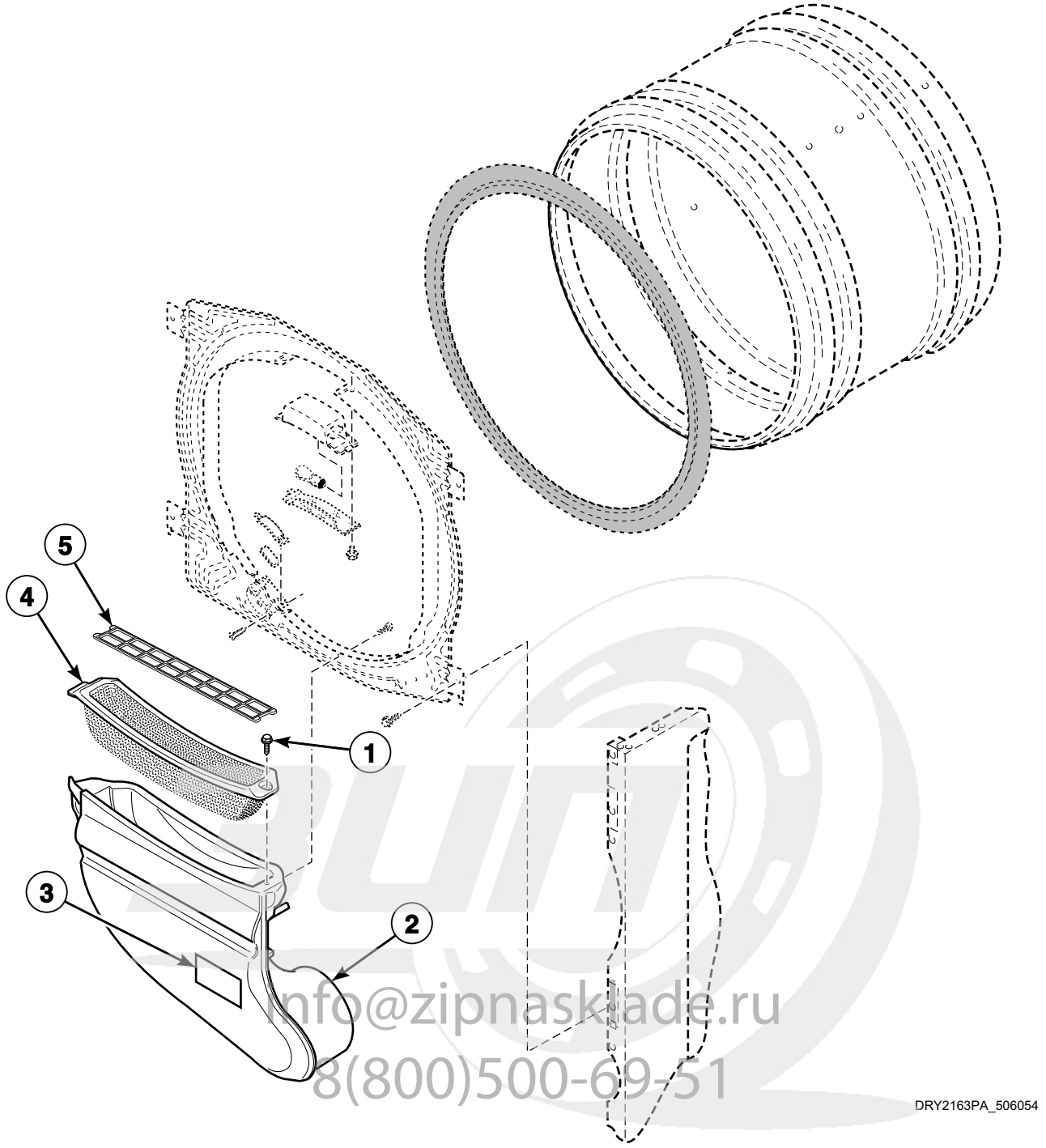


info@zipnaskladе.ru
8(800)500-69-51


© Copyright, Alliance Laundry Systems LLC – DO NOT COPY or TRANSMIT

# Air Duct

| REF | PART NO. | DESCRIPTION | COMMENTS |
|---|---|---|---|
| 1 | 501285 | Screw | |
| 2 | 510151LG | Air Duct Assembly | Models ZDE3LRGS171CW01, ZDE4BFGS171CW01 and ZDE4BRGS171CW01 starting Serial No. 1303025315; Models ADE32FSS431AN01, ADE32FSS431NN22, ADE32FSS541RN01, ADE41FSS171TN03, ADG32FSS301AN01, ADG41FSS111TN03, ZDE41FSS171CN01 and ZDG41FSS111CN01 |
| | 510151W | Air Duct Assembly | Models ZDE3LRGS171CW01, ZDE4BFGS171CW01 and ZDE4BRGS171CW01 through Serial No. 1303025314; All other models |
| 3 | 500314 | Warning Label | Models AEZ28A*F1702, AEZ68A*F1702, AGZ28A*F1102, AGZ68A*F1102, CDE3LRGS171CW01, CDE4BFGS171CW01, CDG3LRGS111CW01, CDG4BFGS111CW01, CEZ68A*F1702, CGZ68A*F1102, LET57A*F1700, LET67A*F1700, LET68A*F1700, LEY47A*F1709, LEZ57A*F1702, LEZ67A*F1702, LGT57A*F1100, LGT68A*F1100, LGY47A*F1109, LGZ57A*F1102, LGZ67A*F1102, ZDE3LRGS171CW01, ZDE41FSS171CN01, ZDE4BFGS171CW01, ZDE4BRGS171CW01, ZDG3LRGS111CW01, ZDG41FSS111CN01, ZDG4BFGS111CW01 and ZDG4BRGS111CW01 |
| 4 | 503980LG | Lint Filter | Light gray; Models ZDE3LRGS171CW01, ZDE4BFGS171CW01 and ZDE4BRGS171CW01 starting Serial No. 1303025315; Models ADE32FSS431AN01, ADE32FSS431NN22, ADE32FSS541RN01, ADE41FSS171TN03, ADG32FSS301AN01, ADG41FSS111TN03, ZDE41FSS171CN01 and ZDG41FSS111CN01 |
| | 503980W | Lint Filter | Models ZDE3LRGS171CW01, ZDE4BFGS171CW01 and ZDE4BRGS171CW01 through Serial No. 1303025314; All other models |
| 5 | 510502LG | Lint Filter Cover | Models ADE41FSS171TN03, ZDE3LRGS171CW01, ZDE41FSS171CN01, ZDE4BFGS171CW01 and ZDE4BRGS171CW01; Models starting Serial No. 1303025315 |
| | 510502W | Lint Filter Cover | Models ADE41FSS171TN03, ZDE3LRGS171CW01, ZDE41FSS171CN01, ZDE4BFGS171CW01 and ZDE4BRGS171CW01 through Serial No. 1303025314; All other models |

*** Add Letter To Designate Color. L - Almond Q - Bisque W - White**

**N/A = Part no longer available**

info@zipnasklade.ru
8(800)500-69-51


© Copyright, Alliance Laundry Systems LLC – DO NOT COPY or TRANSMIT

# Cylinder, Baffles and Drying Rack

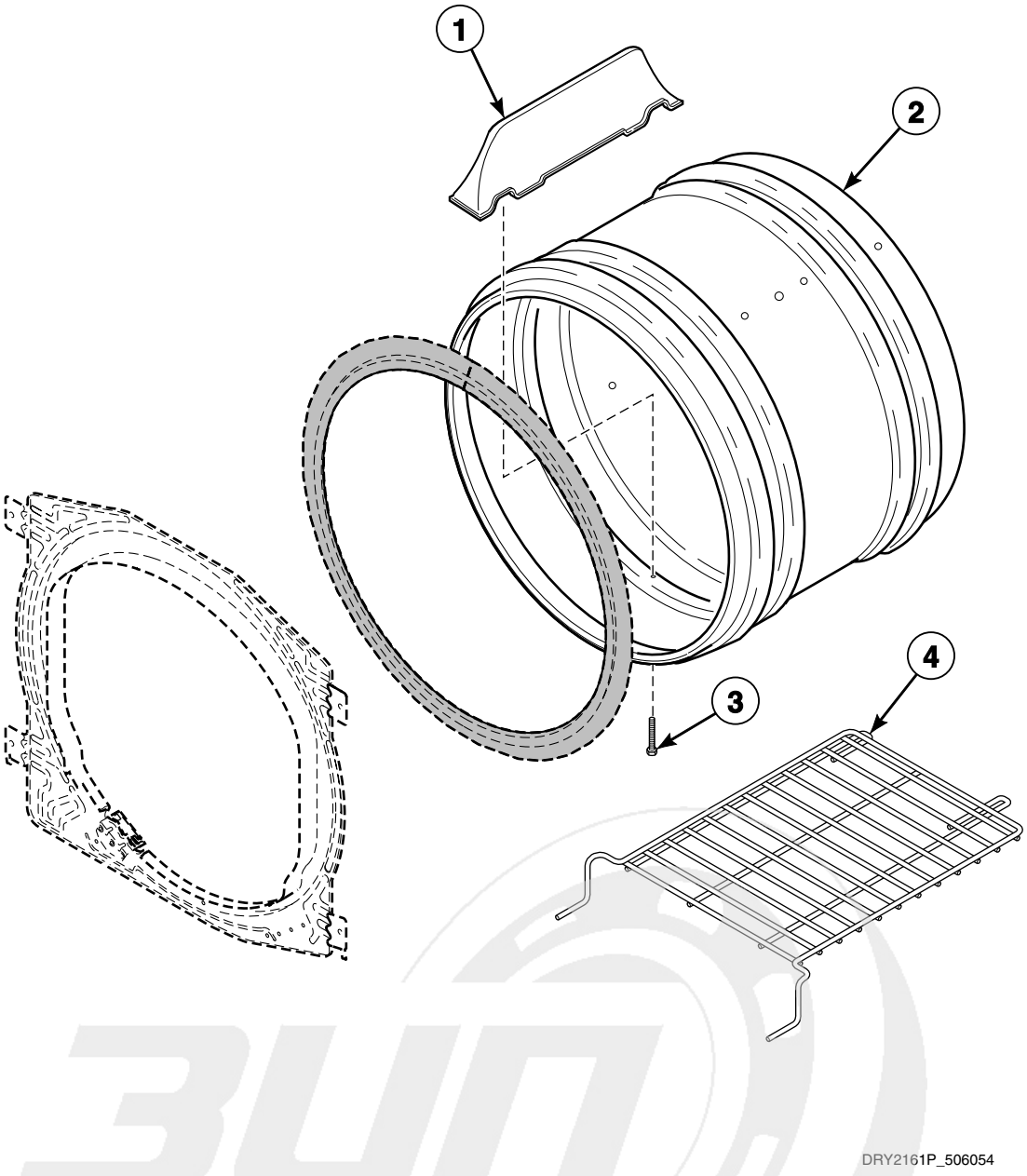


info@zipnasklade.ru
8(800)500-69-51


© Copyright, Alliance Laundry Systems LLC – DO NOT COPY or TRANSMIT

# Cylinder, Baffles and Drying Rack

| REF | PART NO. | DESCRIPTION | COMMENTS |
|---|---|---|---|
| 1 | 510102LG | Cylinder Baffle | 3 required; Light gray; Models BDE30FGS171CW01, LES37A*F3300, MDE3TRWS331TW06, ZDE30RGS171CW01, ZDE3LRGS171CW01, ZDE4BFGS171CW01 and ZDE4BRGS171CW01 starting Serial No. 1303025315; Models ADE32FSS431AN01, ADE32FSS431NN22, ADE32FSS541RN01, ADE41FSS171TN03, ADG32FSS301AN01, ADG41FSS111TN03, ZDE41FSS171CN01 and ZDG41FSS111CN01 |
| | 510102W | Cylinder Baffle | Models BDE30FGS171CW01, LES37A*F3300, MDE3TRWS331TW06, ZDE30RGS171CW01, ZDE3LRGS171CW01, ZDE4BFGS171CW01 and ZDE4BRGS171CW01 through Serial No. 1303025314; All other models |
| 2 | 510265WP | Cylinder Assembly | Galvanized; Includes (3) of item 1 and (6) of item 3; Models BDE30FGS171CW01, LEZ27A*F1502, ZDE30RGS171CW01, ZDE3LRGS171CW01, ZDE4BFGS171CW01 and ZDE4BRGS171CW01 through Serial No. 1303025314; Models AEZ17A*F1702, AEZ28A*F1702, AEZ68A*F1702, AGZ17A*F1102, AGZ28A*F1102, AGZ68A*F1102, BDG30FGS111CW01, CDE3LRGS171CW01, CDE4BFGS171CW01, CDG3LRGS111CW01, CDG4BFGS111CW01, CEZ68A*F1702, CGZ68A*F1102, FDE3TRGS301NW10, FDE3TRGS401NW22, FDG3TRGS301NW10, FEN16A*G4018, FEN17A*G3018, FEN17A*G4018, FES16A*G4018, FES17A*F3300, FES17A*F4350, FEU17A*F1702, FEZ17A*F1702, FGN16A*M3013, FGN17A*M3013, FGS17A*F3060, FGZ17A*F1102, LED17A*F1700, LEN27A*G3008, LEN27A*G3018, LEN27A*G4008, LEN27A*G4018, LES17A*F3000, LES17A*F3007, LES17A*F3022, LES17A*F4500, LES17A*M4588, LES27A*G3018, LES27A*G4000, LES27A*G4500, LES27A*G4518, LES27A*G4018, LES28A*G4018, LET68A*F1700, LEZ27A*F1502, LEZ27A*F1702, LEZ27A*G3018, LEZ27A*G4018, LGN27A*M3008, LGN27A*M3013, LGS17A*F3020, LGS17A*F3081, LGS17A*K1180, LGS17A*M3020, LGS17A*M3082, LGS27A*M3013, LGS27A*M3080, LGT68A*F1100, LGZ27A*F1102, LGZ27A*M3013, ZDG30RGS111CW01, ZDG3LRGS111CW01, ZDG4BFGS111CW01 and ZDG4BRGS111CW01 |
| | 510265LGP | Cylinder Assembly | Models BDE30FGS171CW01, ZDE30RGS171CW01, ZDE3LRGS171CW01, ZDE4BFGS171CW01 and ZDE4BRGS171CW01 starting Serial No. 1303025315 |
| | 505929P | Cylinder Assembly | Stainless steel; Includes (3) of item 1 and (6) of item 3; Models LEN27A*G99M3, LET67A*F1700, LEZ67A*F1702, LGS40A*M3020 and LGZ67A*F1102 |
| | 512940P | Cylinder Assembly | Stainless steel; Includes (3) of item 1 and (6) of item 3; Models ADE32FSS431AN01, ADE32FSS431NN22, ADE32FSS541RN01, ADE41FSS171TN03, ADG32FSS301AN01, ADG41FSS111TN03, ZDE41FSS171CN01 and ZDG41FSS111CN01 |
| | 510159LG | Cylinder Assembly | Models LES37A*F3300 and MDE3TRWS331TW06 starting Serial No. 1303025315 |
| | 510159WP | Cylinder Assembly | White; Includes (3) of item 1 and (6) of item 3; Models LES37A*F3300 and MDE3TRWS331TW06 through Serial No. 1303025314; All other models |
| 3 | 62588 | Screw | |
| 4 | 512082P | Drying Rack | |

*** Add Letter To Designate Color. L - Almond Q - Bisque W - White**

info@zipmasklade.ru
8(800)500-69-51


© Copyright, Alliance Laundry Systems LLC – DO NOT COPY or TRANSMIT

# Rear Bulkhead, Felt Seal and Cylinder Roller - 1 Phase Models

All Models Except FDE3TRGS401NW22, FEN16A*G4018, FEN17A*G4018, FES16A*G4018, LEN27A*G4008, LEN27A*G4018, LEN27A*G99M3, LEN37A*G4018, LES27A*G4000, LES27A*G4018, LES28A*G4018, LES37A*G4018, LEZ27A*G4018 and LEZ37A*G4018

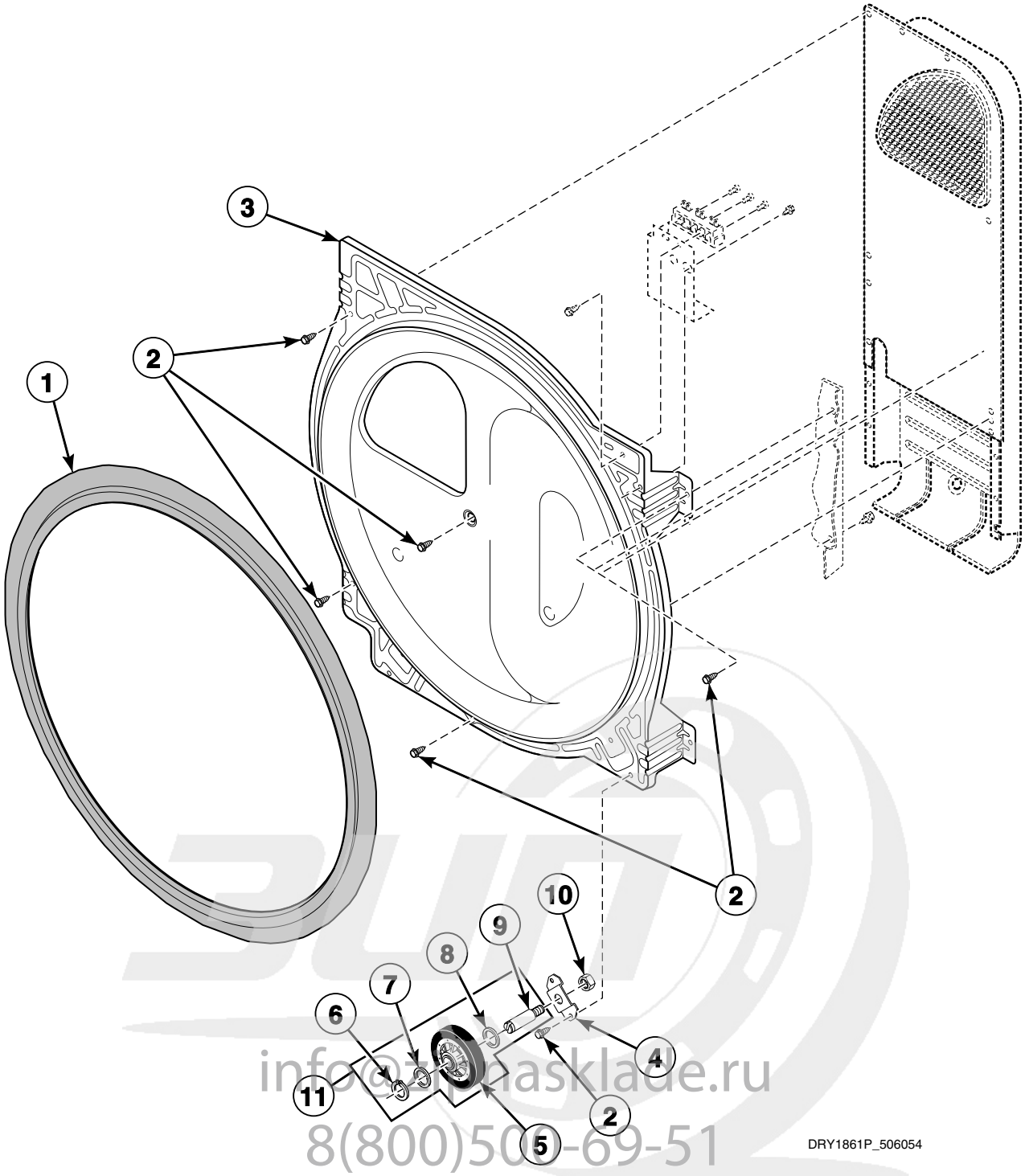


info@zip-hasklade.ru
8(800)500-69-51


© Copyright, Alliance Laundry Systems LLC – DO NOT COPY or TRANSMIT

# Rear Bulkhead, Felt Seal and Cylinder Roller - 1 Phase Models

| REF | PART NO. | DESCRIPTION | COMMENTS |
|---|---|---|---|
| 1 | 510207P | Cylinder Seal Assembly | |
| | 511637P | Adhesive | For cylinder seal |
| | RB170001 | Seal Kit | Includes 2 cylinder seals, 510238P Blower Housing Seal and 511637P Adhesive |
| 2 | 503688 | Screw | |
| 3 | 511082P | Rear Bulkhead Assembly | Galvanized; Includes item 1; Models AEZ17A*F1702, AEZ28A*F1702, AEZ68A*F1702, AGZ17A*F1102, AGZ28A*F1102, AGZ68A*F1102, BDE30FGS171CW01, BDG30FGS111CW01, CDE3LRGS171CW01, CDE4BFGS171CW01, CDG3LRGS111CW01, CDG4BFGS111CW01, CEZ68A*F1702, CGZ68A*F1102, FDE3TRGS301NW10, FDG3TRGS301NW10, FES17A*F3300, FES17A*F4350, FEU17A*F1702, FEZ17A*F1702, FGN16A*M3013, FGN17A*M3013, FGS17A*F3060, FGZ17A*F1102, LED17A*F1700, LEN27A*G3008, LEN27A*G3018, LES17A*F3000, LES17A*F3007, LES17A*F3022, LES17A*F4500, LES17A*M4588, LES27A*G3018, LES27A*G4500, LES27A*G4518, LET68A*F1700, LEZ27A*F1502, LEZ27A*F1702, LEZ27A*G3018, LGN27A*M3008, LGN27A*M3013, LGS17A*F3020, LGS17A*F3081, LGS17A*K1180, LGS17A*M3020, LGS17A*M3082, LGS27A*M3013, LGS27A*M3080, LGT68A*F1100, LGZ27A*F1102, LGZ27A*M3013, ZDE30RGS171CW01, ZDE3LRGS171CW01, ZDE4BFGS171CW01, ZDE4BRGS171CW01, ZDG30RGS111CW01, ZDG3LRGS111CW01, ZDG4BFGS111CW01 and ZDG4BRGS111CW01 |
| | N/A | Rear Bulkhead Assembly | Stainless steel; Includes item 1; Models LET67A*F1700, LEZ67A*F1702, LGS40A*M3020 and LGZ67A*F1102 |
| | 505246 | Rear Bulkhead Assembly | Stainless steel; Includes item 1; Models ADE32FSS431AN01, ADE32FSS431NN22, ADE32FSS541RN01, ADE41FSS171TN03, ADG32FSS301AN01, ADG41FSS111TN03, ZDE41FSS171CN01 and ZDG41FSS111CN01 |
| | 510905WP | Rear Bulkhead Assembly | White; Includes item 1; All other models |
| 4 | 510100 | Cylinder Roller Bracket | |
| 5 | 510708P | Cylinder Roller | |
| 6 | 23748 | Retaining Ring | |
| 7 | 52549 | Washer | |
| 8 | 504082 | Washer | |
| 9 | 56461P | Shaft | |
| 10 | 56156 | Nut | |
| 11 | RB170002 | Roller Kit | Includes items 5-9 |

*** Add Letter To Designate Color. G - Gray L - Almond Q - Bisque W - White**

**N/A = Part no longer available**

info@zipnasklade.ru
8(800)500-69-51


© Copyright, Alliance Laundry Systems LLC – DO NOT COPY or TRANSMIT

# Terminal Block - 1 Phase Models

All Models Except FDE3TRGS401NW22, FEN16A*G4018, FEN17A*G4018, FES16A*G4018, LEN27A*G4008, LEN27A*G4018, LEN27A*G99M3, LEN37A*G4018, LES27A*G4000, LES27A*G4018, LES28A*G4018, LES37A*G4018, LEZ27A*G4018 and LEZ37A*G4018

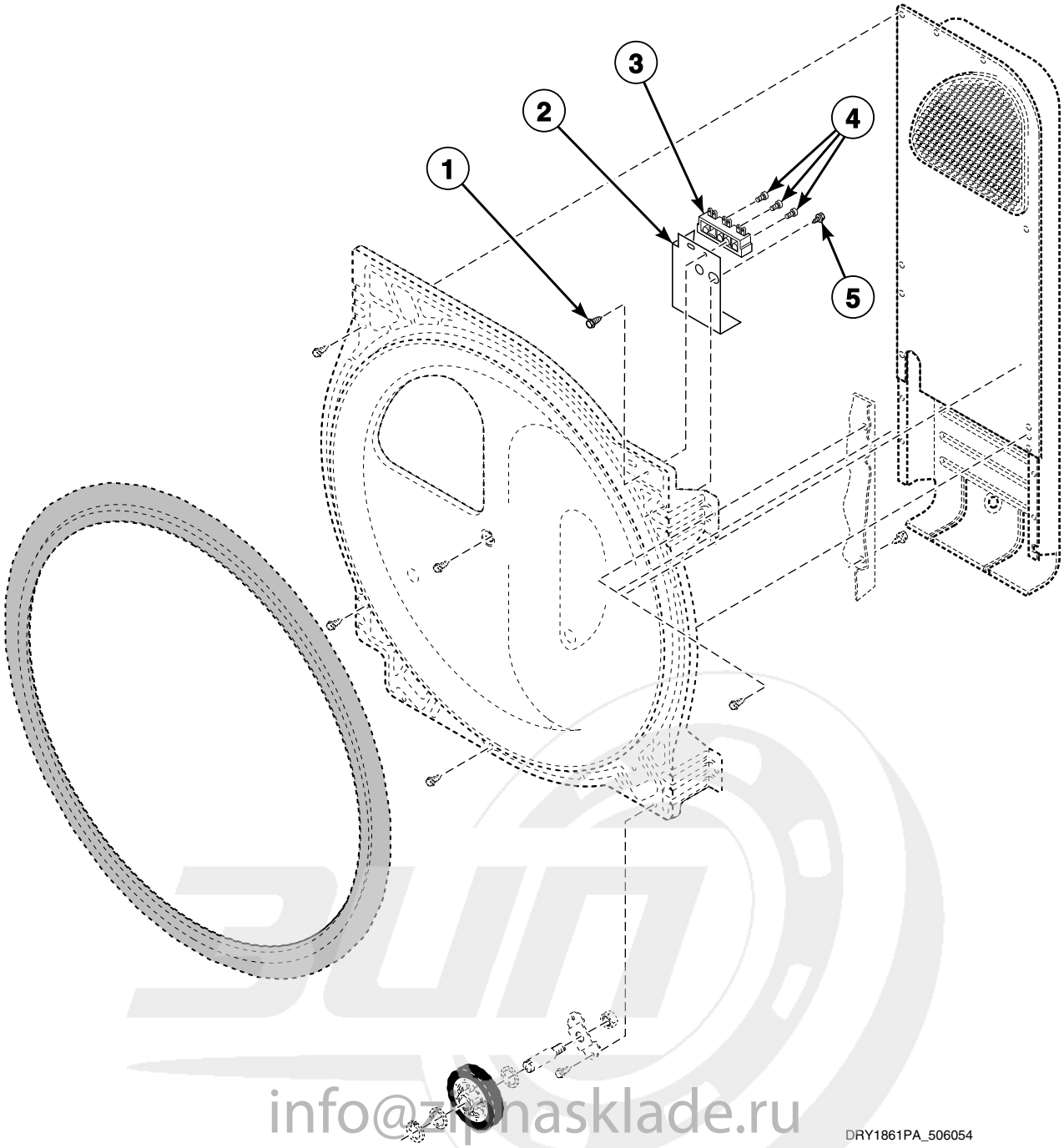


info@zipnasklade.ru
8(800)500-69-51


© Copyright, Alliance Laundry Systems LLC – DO NOT COPY or TRANSMIT

# Terminal Block - 1 Phase Models

| REF | PART NO. | DESCRIPTION | COMMENTS |
|---|---|---|---|
| 1 | 501285 | Screw | |
| 2 | 510237 | Terminal Block Shield | Models ADE41FSS171TN03, AEZ17A*F1702, AEZ28A*F1702, AEZ68A*F1702, BDE30FGS171CW01, CDE3LRGS171CW01, CDE4BFGS171CW01, CEZ68A*F1702, FEU17A*F1702, FEZ17A*F1702, LEB07A*F1709, LED17A*F1700, LET57A*F1700, LET67A*F1700, LET68A*F1700, LEY47A*F1709, LEZ27A*F1502, LEZ27A*F1702, LEZ37A*F1702, LEZ57A*F1702, LEZ67A*F1702, ZDE30RGS171CW01, ZDE3LRGS171CW01, ZDE41FSS171CN01, ZDE4BFGS171CW01 and ZDE4BRGS171CW01 |
| | 505768 | Terminal Block Shield | Models ADE3TRWS431AW01, ADE3TRWS431NW22, ADE32FSS431AN01, ADE32FSS431NN22, ADE32FSS541RN01, ADG3TRWS301AW01, ADG32FSS301AN01, FDE3TRGS301NW10, FDG3TRGS301NW10, FGN16A*M3013, FGN17A*M3013, LDE3TRWS331TW05, LEG37A*F4350, LEH37A*F3300, LEK37A*F4350, LEN27A*G3008, LEN27A*G3018, LEN37A*G3018, LES17A*F3000, LES17A*F3007, LES17A*F3022, LES17A*F4500, LES17A*M4588, LES27A*G3018, LES27A*G4500, LES27A*G4518, LES33A*F4562, LES37A*F3000, LES37A*F3028, LES37A*F3300, LES37A*F3327, LES37A*F4350, LES37A*F5412, LES37A*G3018, LEZ27A*G3018, LEZ37A*F3000, LEZ37A*G3018, LEZ37A*G5618, LGG37A*F3058, LGH37A*F5423, LGK37A*F3058, LGK37A*F3060, LGN27A*M3008, LGN27A*M3013, LGN37A*M3013, LGS17A*F3020, LGS17A*F3081, LGS17A*M3020, LGS17A*M3082, LGS27A*M3013, LGS27A*M3080, LGS37A*F3000, LGS37A*F3022, LGS37A*F3028, LGS37A*F3058, LGS37A*F3060, LGS37A*F3080, LGS37A*F5412, LGS37A*F5423, LGS37A*G3013, LGS37A*G3080, LGS37A*M3013, LGS37A*M3080, LGS38A*M3013, LGS38A*M3020, LGS40A*M3020, LGZ27A*M3013, LGZ37A*F3000, LGZ37A*G3013, LGZ37A*M3013 and MDE3TRWS331TW06 |
| 3 | 510190P | Terminal Block Assembly | Includes 3 of item 4; All models except ADG41FSS111TN03, AGZ17A*F1102, AGZ28A*F1102, AGZ68A*F1102, BDG30FGS111CW01, CDG3LRGS111CW01, CDG4BFGS111CW01, CGZ68A*F1102, FGZ17A*F1102, LGH37A*F1182, LGS17A*K1180, LGS37A*G3013, LGS37A*G3080, LGT57A*F1100, LGT68A*F1100, LGY47A*F1109, LGZ27A*F1102, LGZ37A*F1102, LGZ37A*G3013, LGZ57A*F1102, LGZ67A*F1102, ZDG30RGS111CW01, ZDG3LRGS111CW01, ZDG41FSS111CN01, ZDG4BFGS111CW01 and ZDG4BRGS111CW01 |
| | N/A | Terminal Block | Models LGS37A*G3013, LGS37A*G3080 and LGZ37A*G3013 |
| 4 | 61199 | Screw | All models except AGZ17A*F1102, AGZ28A*F1102, AGZ68A*F1102, BDG30FGS111CW01, CDG3LRGS111CW01, CDG4BFGS111CW01, CGZ68A*F1102, FGZ17A*F1102, LGH37A*F1182, LGS17A*K1180, LGS37A*G3013, LGS37A*G3080, LGT57A*F1100, LGT68A*F1100, LGY47A*F1109, LGZ27A*F1102, LGZ37A*F1102, LGZ37A*G3013, LGZ57A*F1102, LGZ67A*F1102, ZDG30RGS111CW01, ZDG3LRGS111CW01, ZDG41FSS111CN01, ZDG4BFGS111CW01 and ZDG4BRGS111CW01 |
| 5 | 503688 | Screw | |

*** Add Letter To Designate Color. G - Gray L - Almond Q - Bisque W - White**

**N/A = Part no longer available**

info@zipnasklade.ru
8(800)500-69-51


© Copyright, Alliance Laundry Systems LLC – DO NOT COPY or TRANSMIT

# Rear Bulkhead, Felt Seal, Cylinder Roller and Terminal Block - 3 Phase Models

Models FDE3TRGS401NW22, FEN16A*G4018, FEN17A*G4018, FES16A*G4018, LEN27A*G4008, LEN27A*G4018, LEN27A*G99M3, LEN37A*G4018, LES27A*G4000, LES27A*G4018, LES28A*G4018, LES37A*G4018, LEZ27A*G4018 and LEZ37A*G4018

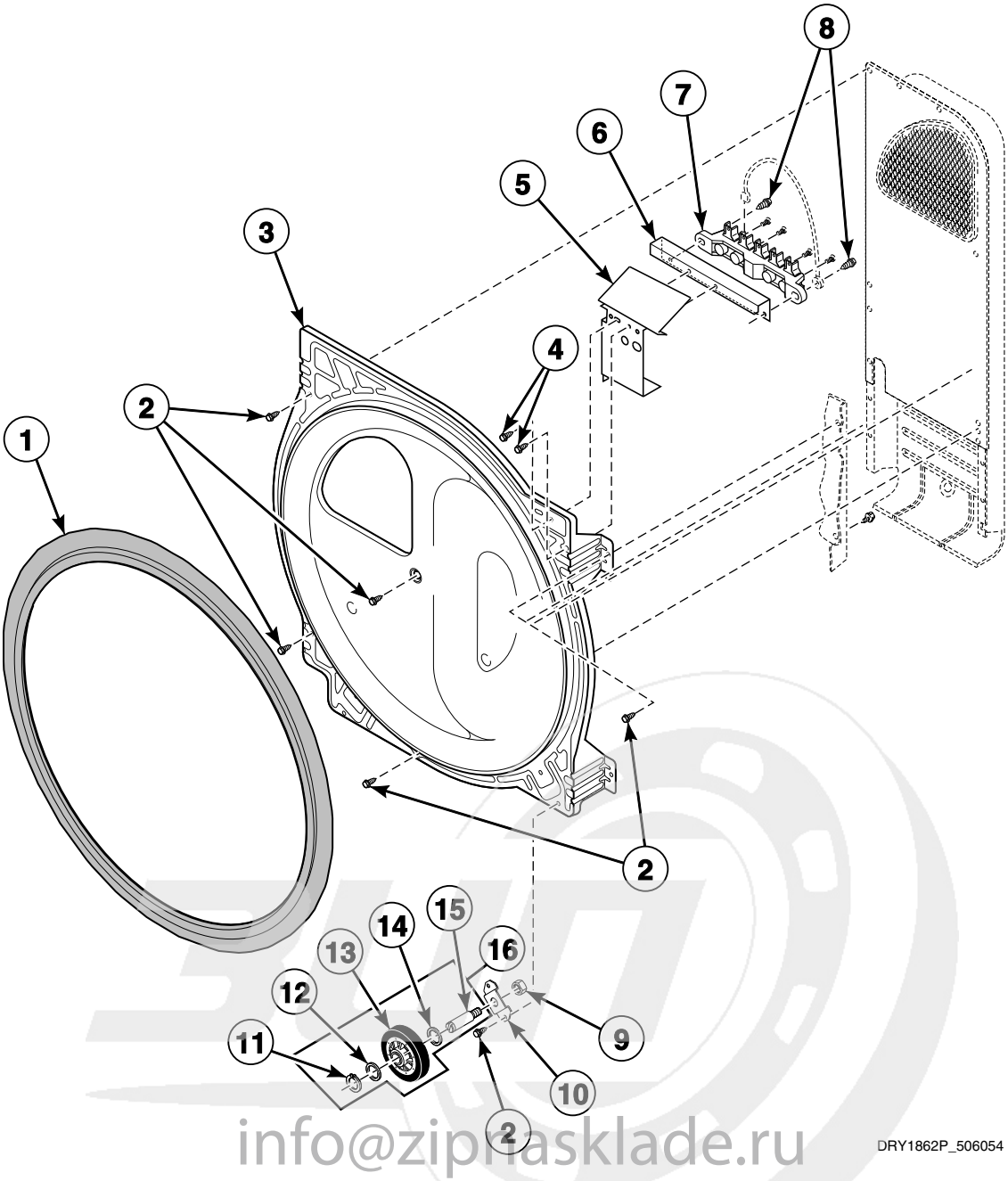


info@zipnasklade.ru
8(800)500-69-51


© Copyright, Alliance Laundry Systems LLC – DO NOT COPY or TRANSMIT

# Rear Bulkhead, Felt Seal, Cylinder Roller and Terminal Block - 3 Phase Models

| REF | PART NO. | DESCRIPTION | COMMENTS |
|---|---|---|---|
| 1 | 510207P | Cylinder Seal Assembly | |
| | 511637P | Adhesive | For cylinder seal |
| | RB170001 | Seal Kit | Includes 2 cylinder seals, 510238P Blower Housing Seal and 511637P Adhesive |
| 2 | 503688 | Screw | |
| 3 | 510905WP | Rear Bulkhead Assembly | White; Includes item 1; Models LEN37A*G4018, LES37A*G4018 and LEZ37A*G4018 |
| | 505246 | Rear Bulkhead Assembly | Stainless steel; Includes item 1; Model LEN27A*G99M3 |
| | 511082P | Rear Bulkhead Assembly | Galvanized; Includes item 1; All other models |
| 4 | 501285 | Screw | |
| 5 | 505768 | Terminal Block Shield | |
| 6 | 505875 | Terminal Block Support Bracket | |
| 7 | 505876 | Terminal Block Assembly | |
| 8 | 503661 | Screw | |
| 9 | 56156 | Nut | |
| 10 | 510100 | Cylinder Roller Bracket | |
| 11 | 23748 | Retaining Ring | |
| 12 | 52549 | Washer | |
| 13 | 510708P | Cylinder Roller | |
| 14 | 504082 | Washer | |
| 15 | 56461P | Shaft | |
| 16 | RB170002 | Roller Kit | Includes items 11-15 |

*** Add Letter To Designate Color. G - Gray L - Almond Q - Bisque W - White**

info@zipnasklade.ru
8(800)500-69-51


© Copyright, Alliance Laundry Systems LLC – DO NOT COPY or TRANSMIT

# Heater Duct and Element Assembly - 1 Phase Models

All Electric Models Except FDE3TRGS401NW22, FEN16A*G4018, FEN17A*G4018, FES16A*G4018, LEN27A*G4008, LEN27A*G4018, LEN27A*G99M3, LEN37A*G4018, LES27A*G4000, LES27A*G4018, LES28A*G4018, LES37A*G4018, LEZ27A*G4018 and LEZ37A*G4018

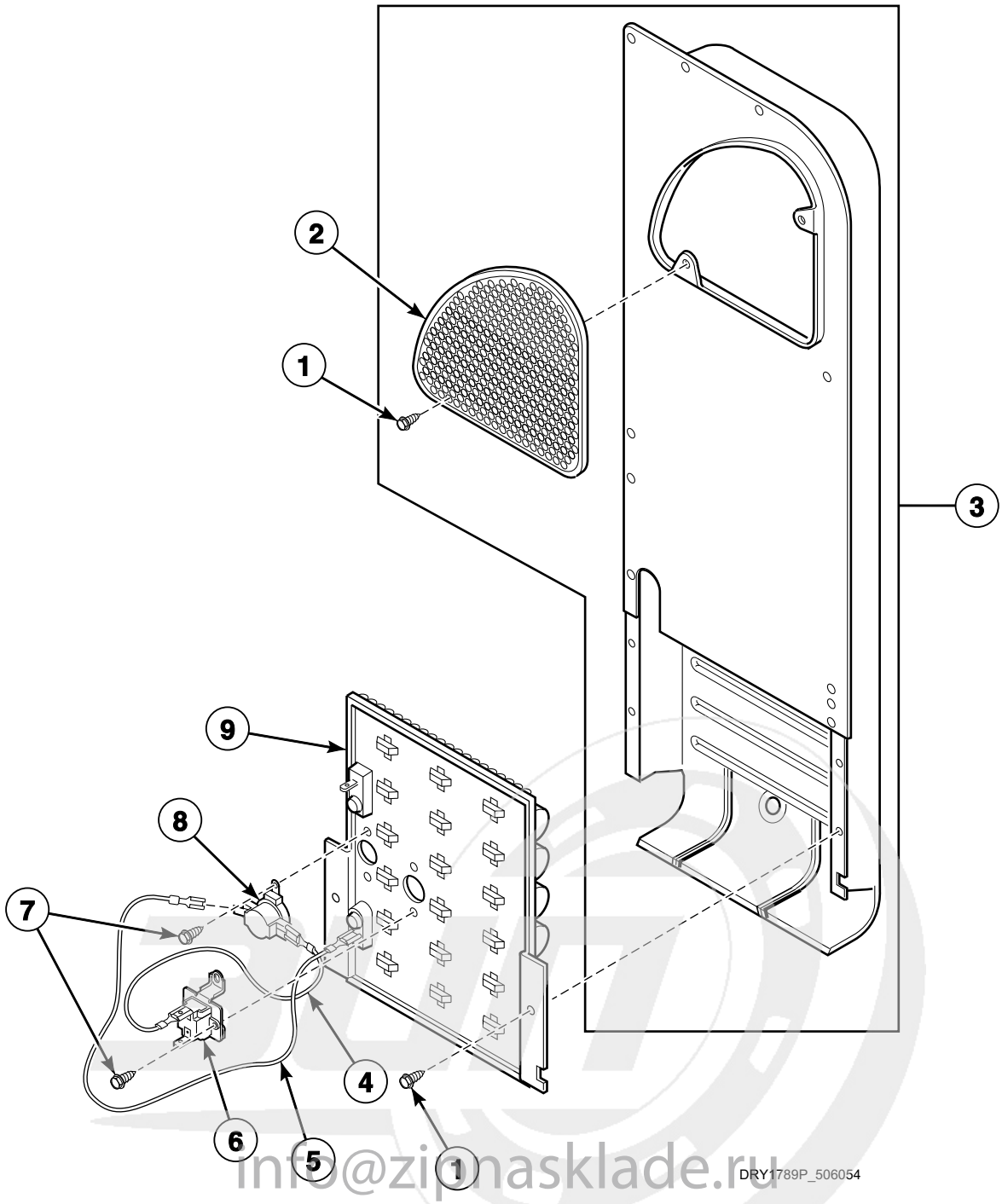


info@zipnasklade.ru
8(800)500-69-51


© Copyright, Alliance Laundry Systems LLC – DO NOT COPY or TRANSMIT

# Heater Duct and Element Assembly - 1 Phase Models

| REF | PART NO. | DESCRIPTION | COMMENTS |
|---|---|---|---|
| 1 | 503688 | Screw | |
| 2 | 500820 | Outlet Cover | |
| 3 | 510025P | Heater Duct and Screw Assembly | Includes items 1 and 2 |
| 4 | 510528 | Wire Assembly | Orange; Thermostat jumper; Attaches to heater assembly |
| 5 | 510527 | Wire Assembly | Black; Fuse jumper; Attaches to heater assembly |
| 6 | 511412 | Thermal Fuse Assembly | |
| 7 | 23222 | Screw | |
| 8 | 510700 | Limit Thermostat | Models LES17A*F4500, LES17A*M4588, LES27A*G4500, LES27A*G4518, LES33A*F4562 and LEZ37A*G5618 |
| | 510701 | Limit Thermostat | All other models |
| 9 | 510326P | Heater Assembly | 240 Volt/50 Hertz; 4.8 kW; Models FDE3TRGS301NW10, FEN17A*G3018, LEN27A*G3008, LEN27A*G3018, LEN37A*G3018, LES17A*F3000, LES17A*F3007, LES17A*F3022, LES27A*G3018, LES37A*F3000, LES37A*F3028, LES37A*G3018, LEZ27A*G3018, LEZ37A*F3000 and LEZ37A*G3018 |
| | 510327P | Heater Assembly | 240 Volt/50 Hertz; 4 kW; Models ADE3TFWS431AW01, ADE3TRWS431AW01, ADE3TRWS431NW22, ADE32FSS431AN01, ADE32FSS431NN22, FES17A*F4350, LEG37A*F4350, LEK37A*F4350 and LES37A*F4350 |
| | 510328P | Heater Assembly | 240 Volt/50 or 60 Hertz; 3.1 kW; Models LES17A*F4500, LES17A*M4588, LES27A*G4500, LES27A*G4518 and LES33A*F4562 |
| | 511503P | Heater Assembly | 240 Volt/60 Hertz; 2.8 kW; Model LEZ37A*G5618 |
| | 510329P | Heater Assembly | 240 Volt/60 Hertz; 5.35 kW; Model ADE41FSS171TN03 |
| | 510330P | Heater Assembly | 208 Volt/60 Hertz; 4.25 kW; Model LEZ27A*F1502 |
| | 510324P | Heater Assembly | 240 Volt/60 Hertz; 5 kW; All other models |

*** Add Letter To Designate Color. G - Gray L - Almond Q - Bisque W - White**

info@zipnasklade.ru
8(800)500-69-51


© Copyright, Alliance Laundry Systems LLC – DO NOT COPY or TRANSMIT

# Heater Kit Assembly - 1 Phase Models

All Electric Models Except FDE3TRGS401NW22, FEN16A*G4018, FEN17A*G4018, FES16A*G4018, LEN27A*G4008, LEN27A*G4018, LEN27A*G99M3, LEN37A*G4018, LES27A*G4000, LES27A*G4018, LES28A*G4018, LES37A*G4018, LEZ27A*G4018 and LEZ37A*G4018

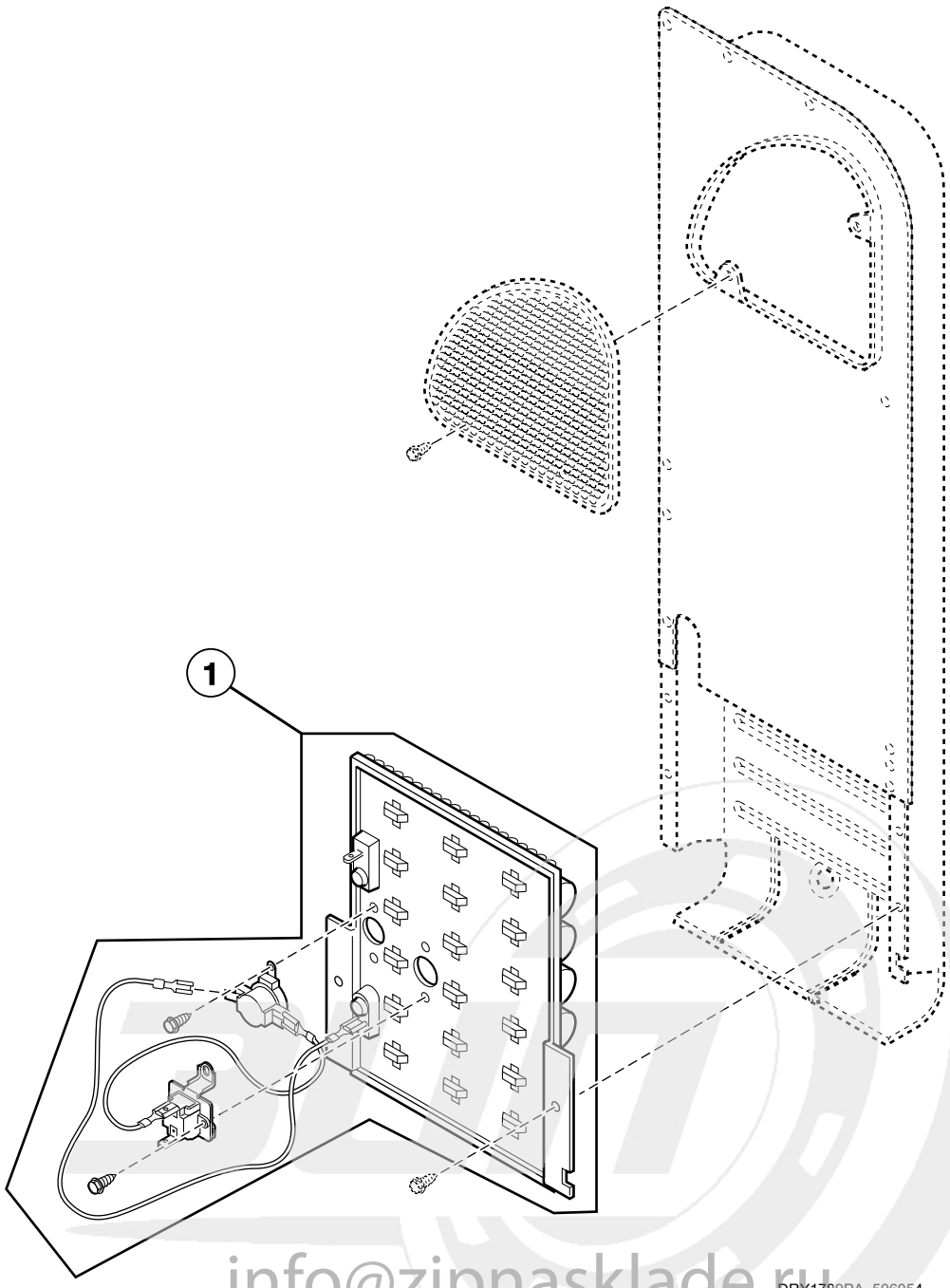


info@zipnasklade.ru
8(800)500-69-51


© Copyright, Alliance Laundry Systems LLC – DO NOT COPY or TRANSMIT

# Heater Kit Assembly - 1 Phase Models

| REF | PART NO. | DESCRIPTION | COMMENTS |
|---|---|---|---|
| 1 | 61929 | Heater Kit Assembly | 240 Volt/50 Hertz; 4.8 kW; Includes thermostat, fuse and wiring; Models FDE3TRGS301NW10, FEN17A*G3018, LEN27A*G3008, LEN27A*G3018, LEN37A*G3018, LES17A*F3000, LES17A*F3007, LES17A*F3022, LES27A*G3018, LES37A*F3000, LES37A*F3028, LES37A*G3018, LEZ27A*G3018, LEZ37A*F3000 and LEZ37A*G3018 |
| | 61930 | Heater Kit Assembly | 240 Volt/50 Hertz; 4 kW; Includes thermostat, fuse and wiring; Models ADE3TFWS431AW01, ADE3TRWS431AW01, ADE3TRWS431NW22, ADE32FSS431AN01, ADE32FSS431NN22, FES17A*F4350, LEG37A*F4350, LEK37A*F4350 and LES37A*F4350 |
| | 61931 | Heater Kit Assembly | 240 Volt/50 or 60 Hertz; 3.1 kW; Includes thermostat, fuse and wiring; Models LES17A*F4500, LES17A*M4588, LES27A*G4500, LES27A*G4518 and LES33A*F4562 |
| | 966P3 | Heater Kit | 240 Volt/60 Hertz; 2.8 kW; Includes thermostat, fuse and wiring; Models ADE32FSS541RN01, AEZ17A*F1702, AEZ28A*F1702, AEZ68A*F1702, BDE30FGS171CW01, CDE3LRGS171CW01, CDE4BFGS171CW01, CEZ68A*F1702, FES17A*F3300, FEU17A*F1702, FEZ17A*F1702, LDE3TRWS331TW05, LEB07A*F1709, LED17A*F1700, LEH37A*F3300, LES37A*F3300, LES37A*F3327, LES37A*F5412, LET57A*F1700, LET67A*F1700, LET68A*F1700, LEY47A*F1709, LEZ27A*F1502, LEZ27A*F1702, LEZ37A*F1702, LEZ57A*F1702, LEZ67A*F1702, MDE3TRWS331TW06, ZDE30RGS171CW01, ZDE3LRGS171CW01, ZDE41FSS171CN01, ZDE4BFGS171CW01 and ZDE4BRGS171CW01 |
| | 61927 | Heater Kit Assembly | 240 Volt/60 Hertz; 5 kW; Includes thermostat, fuse and wiring; Models ADE32FSS541RN01, AEZ17A*F1702, AEZ28A*F1702, AEZ68A*F1702, BDE30FGS171CW01, CDE3LRGS171CW01, CDE4BFGS171CW01, CEZ68A*F1702, FES17A*F3300, FEU17A*F1702, FEZ17A*F1702, LDE3TRWS331TW05, LEB07A*F1709, LED17A*F1700, LEH37A*F3300, LES37A*F3300, LES37A*F3327, LES37A*F5412, LET57A*F1700, LET67A*F1700, LET68A*F1700, LEY47A*F1709, LEZ27A*F1502, LEZ27A*F1702, LEZ37A*F1702, LEZ57A*F1702, LEZ67A*F1702, MDE3TRWS331TW06, ZDE30RGS171CW01, ZDE3LRGS171CW01, ZDE41FSS171CN01, ZDE4BFGS171CW01 and ZDE4BRGS171CW01 |
| | 964P3 | Heater Kit | 240 Volt/60 Hertz; 5.35 kW; Includes thermostat, fuse and wiring; Model ADE41FSS171TN03 |

*** Add Letter To Designate Color. G - Gray L - Almond Q - Bisque W - White**

info@zipnasklade.ru
8(800)500-69-51


© Copyright, Alliance Laundry Systems LLC – DO NOT COPY or TRANSMIT

# Heater Duct and Element Assembly - 3 Phase Models

Models FDE3TRGS401NW22, FEN16A*G4018, FEN17A*G4018, FES16A*G4018, LEN27A*G4008, LEN27A*G4018, LEN27A*G99M3, LEN37A*G4018, LES27A*G4018, LES27A*G4018, LES28A*G4018, LES37A*G4018, LEZ27A*G4018 and LEZ37A*G4018

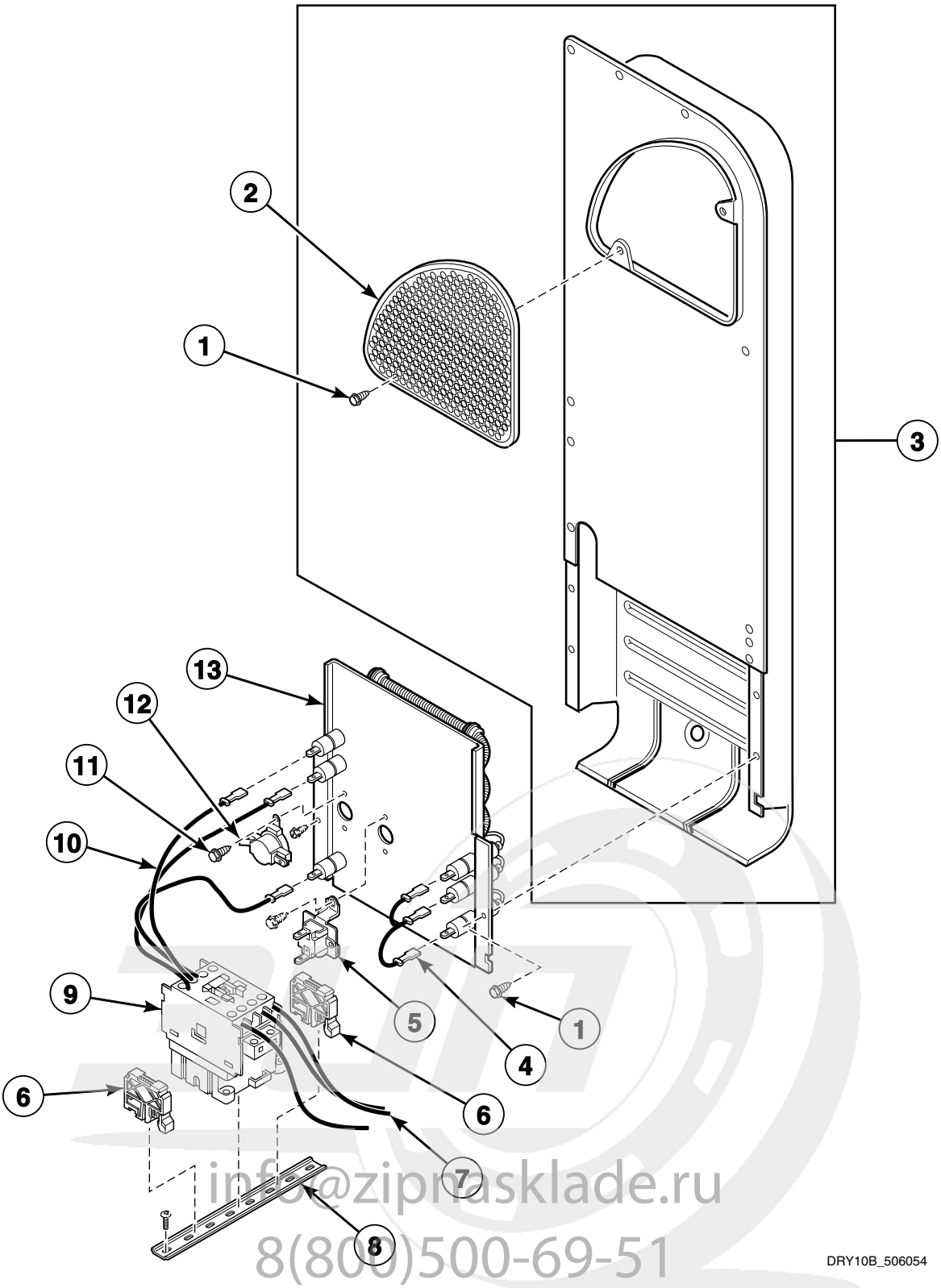


info@zipnasklade.ru
8(800)500-69-51


© Copyright, Alliance Laundry Systems LLC – DO NOT COPY or TRANSMIT

# Heater Duct and Element Assembly - 3 Phase Models

| REF | PART NO. | DESCRIPTION | COMMENTS |
|---|---|---|---|
| | 756P3 | Conversion Kit | 400 Volt, 4 wire WYE to 240 Volt, 3 wire Delta |
| 1 | 503688 | Screw | |
| 2 | 500820 | Outlet Cover | |
| 3 | 510025P | Heater Duct and Screw Assembly | Includes items 1 and 2 |
| 4 | 511270 | Jumper Wire Assembly | 3 Phase |
| 5 | 511412 | Thermal Fuse Assembly | |
| 6 | 70121001 | End Stop | |
| 7 | 511112P | Block to Relay Harness | |
| 8 | M412693 | Din Rail | |
| 9 | F330177P | Contactor | |
| 10 | 511114P | Relay to Heater Harness | |
| 11 | 23222 | Screw | |
| 12 | 510701 | Limit Thermostat | |
| 13 | 511014P | Heater | 400 Volt/3 Phase |

*** Add Letter To Designate Color. G - Gray L - Almond Q - Bisque W - White**

info@zipnasklade.ru
8(800)500-69-51


© Copyright, Alliance Laundry Systems LLC – DO NOT COPY or TRANSMIT

# Heater Duct Assembly

Gas Models

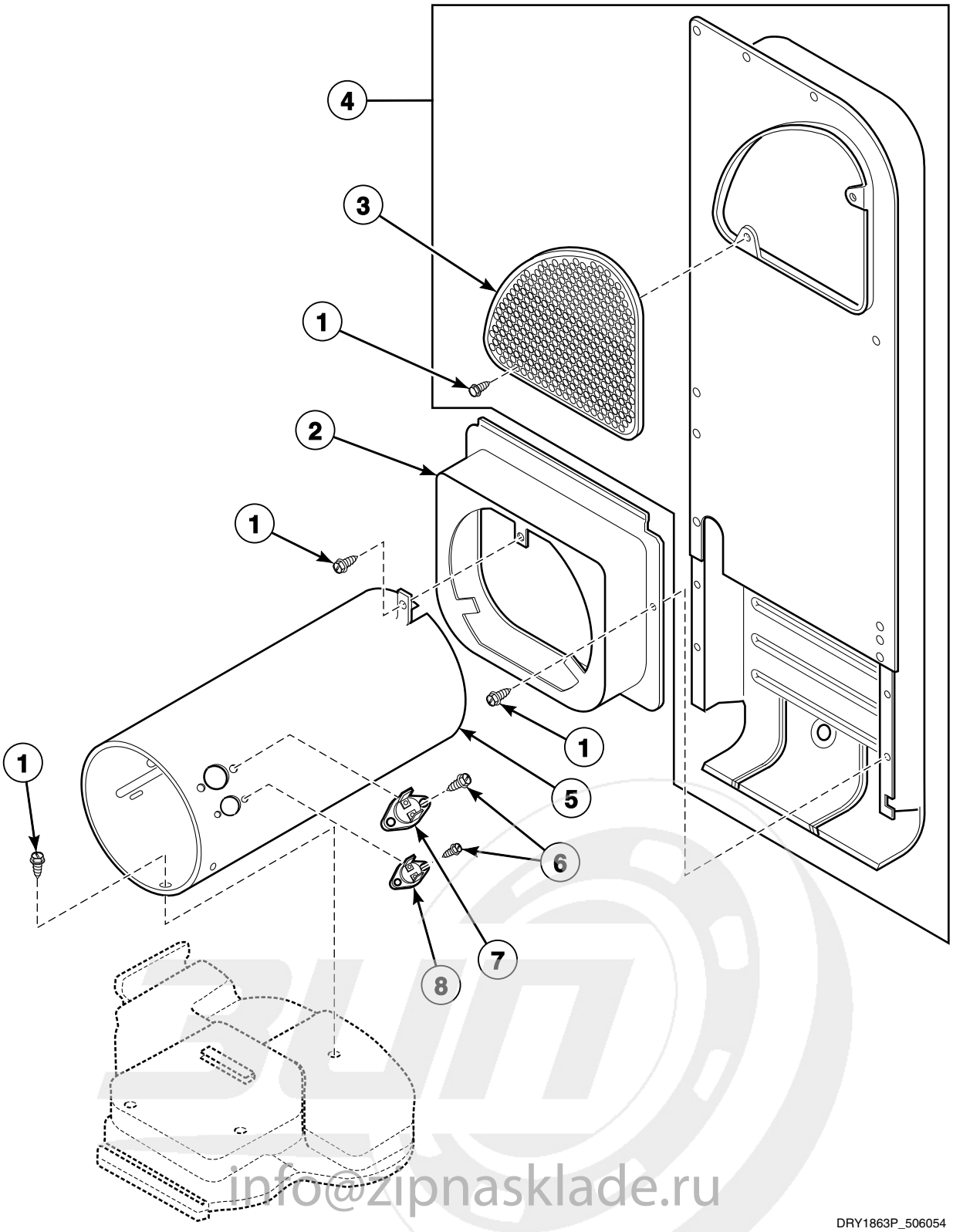


info@zipnasklade.ru
8(800)500-69-51


© Copyright, Alliance Laundry Systems LLC – DO NOT COPY or TRANSMIT

# Heater Duct Assembly

| REF | PART NO. | DESCRIPTION | COMMENTS |
|---|---|---|---|
| 1 | 503688 | Screw | |
| 2 | 510101 | Heat Duct Shroud | |
| 3 | 500820 | Outlet Cover | |
| 4 | 510025P | Heater Duct and Screw Assembly | Includes items 1 and 3 |
| 5 | 510132 | Combustion Duct | Models LGG37A*F3058, LGK37A*F3058, LGS37A*F3058 and LGS37A*F5412 |
| | 510131 | Combustion Duct | All other models |
| 6 | 51782 | Screw | |
| 7 | 510702 | Limit Thermostat | Auto reset; Black |
| 8 | 510703 | Thermostat | Manual reset; Models LGG37A*F3058, LGK37A*F3058, LGS37A*F3058 and LGS37A*F5412 |

*** Add Letter To Designate Color. G - Gray L - Almond Q - Bisque W - White**

info@zipnasklade.ru
8(800)500-69-51


© Copyright, Alliance Laundry Systems LLC – DO NOT COPY or TRANSMIT

# Gas Valve and Igniter

All Gas Models Except LGG37A*F3058, LGK37A*F3058, LGS37A*F3058, LGS37A*G3013, LGS37A*G3080 and LGZ37A*G3013

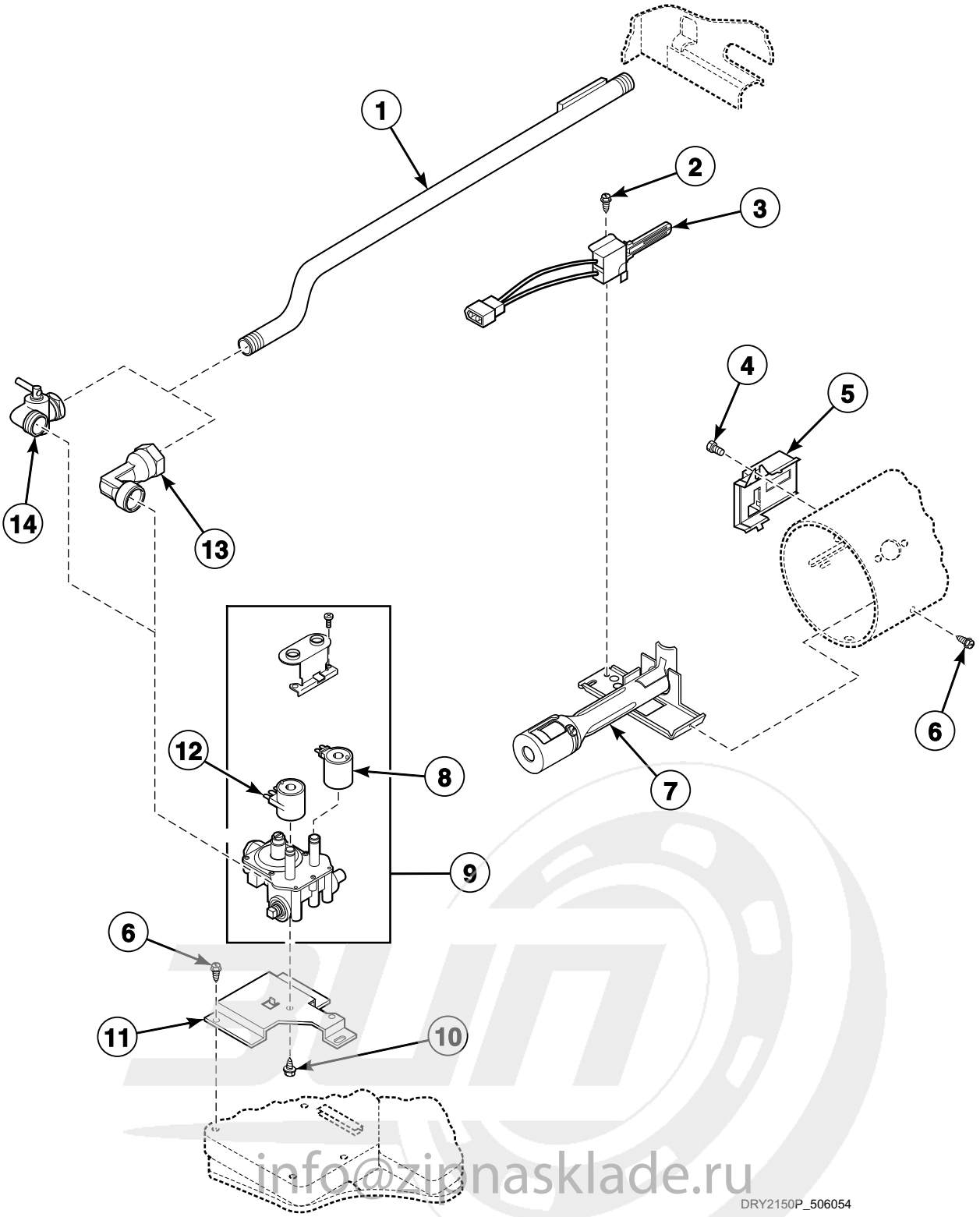


info@zipnasklade.ru
8(800)500-69-51


© Copyright, Alliance Laundry Systems LLC – DO NOT COPY or TRANSMIT

# Gas Valve and Igniter

| REF | PART NO. | DESCRIPTION | COMMENTS |
|---|---|---|---|
| 1 | 510204 | Lead-In Pipe Assembly | |
| 2 | 51782 | Screw | |
| 3 | 510184P | Igniter and Bracket Assembly | |
| 4 | 23222 | Screw | |
| 5 | 510213 | Sensor | |
| 6 | 503688 | Screw | |
| 7 | 510149P | Burner Assembly | |
| 8 | 58804B | Secondary Coil | 60 Hertz; Models ADG41FSS111TN03, AGZ17A*F1102, AGZ28A*F1102, AGZ68A*F1102, BDG30FGS111CW01, CDG3LRGS111CW01, CDG4BFGS111CW01, CGZ68A*F1102, FGZ17A*F1102, LDG3TRWS111TW05, LGH37A*F1182, LGH37A*F5423, LGS17A*K1180, LGS37A*F5412, LGS37A*F5423, LGT57A*F1100, LGT68A*F1100, LGY47A*F1109, LGZ27A*F1102, LGZ37A*F1102, LGZ57A*F1102, LGZ67A*F1102, MDG3TRWS111TW06, ZDG30RGS111CW01, ZDG3LRGS111CW01, ZDG41FSS111CN01, ZDG4BFGS111CW01 and ZDG4BRGS111CW01 |
| | 59063B | Secondary Coil | 50 Hertz; All other models |
| 9 | 510506P | Gas Valve Assembly | 60 Hertz; 22,500 Btu; Models ADG41FSS111TN03, AGZ17A*F1102, AGZ28A*F1102, AGZ68A*F1102, BDG30FGS111CW01, CDG3LRGS111CW01, CDG4BFGS111CW01, CGZ68A*F1102, FGZ17A*F1102, LDG3TRWS111TW05, LGS17A*K1180, LGS37A*F5412, LGT57A*F1100, LGT68A*F1100, LGY47A*F1109, LGZ27A*F1102, LGZ37A*F1102, LGZ57A*F1102, LGZ67A*F1102, MDG3TRWS111TW06, ZDG30RGS111CW01, ZDG3LRGS111CW01, ZDG41FSS111CN01, ZDG4BFGS111CW01 and ZDG4BRGS111CW01 |
| | 510506P | Gas Valve Assembly | 60 Hertz; 22,500 Btu; Models LGH37A*F1182, LGH37A*F5423 and LGS37A*F5423; Must also order 649P3 L.P. Conversion Kit |
| | 59063P | Gas Valve Assembly | 50 Hertz; 20,000 Btu; For L.P. models, order 401P3 L.P. Conversion Kit when ordering gas valve assembly; All other models |
| 10 | 56124 | Screw | |
| 11 | 510128 | Gas Valve Mounting Bracket | |
| 12 | 58804A | Booster and Holding Coil | 60 Hertz; Models ADG41FSS111TN03, AGZ17A*F1102, AGZ28A*F1102, AGZ68A*F1102, BDG30FGS111CW01, CDG3LRGS111CW01, CDG4BFGS111CW01, CGZ68A*F1102, FGZ17A*F1102, LDG3TRWS111TW05, LGH37A*F1182, LGH37A*F5423, LGS17A*K1180, LGS37A*F5412, LGS37A*F5423, LGT57A*F1100, LGT68A*F1100, LGY47A*F1109, LGZ27A*F1102, LGZ37A*F1102, LGZ57A*F1102, LGZ67A*F1102, MDG3TRWS111TW06, ZDG30RGS111CW01, ZDG3LRGS111CW01, ZDG41FSS111CN01, ZDG4BFGS111CW01 and ZDG4BRGS111CW01 |
| | 59063A | Booster and Holding Coil | 50 Hertz; All other models |
| 13 | 513072 | Elbow | Models ADG41FSS111TN03, AGZ17A*F1102, AGZ28A*F1102, AGZ68A*F1102 and CGZ68A*F1102 starting Serial No. 080601; Models ADG32FSS301AN01, LGH37A*F5423, LGS37A*F5423, ZDG30RGS111CW01, ZDG3LRGS111CW01, ZDG41FSS111CN01, ZDG4BFGS111CW01 and ZDG4BRGS111CW01 |
| 14 | 510205 | Elbow Shut-Off Valve | Models AGZ17A*F1102, AGZ28A*F1102, AGZ68A*F1102 and CGZ68A*F1102 through Serial No. 080600; All other models |

*** Add Letter To Designate Color. G - Gray L - Almond Q - Bisque W - White**

**N/A = Part no longer available**

info@zipnaklad.ru
8(800)500-69-51


© Copyright, Alliance Laundry Systems LLC – DO NOT COPY or TRANSMIT

# Gas Conversion Kits

All Gas Models Except LGG37A*F3058, LGK37A*F3058, LGS37A*F3058, LGS37A*G3013, LGS37A*G3080 and LGZ37A*G3013

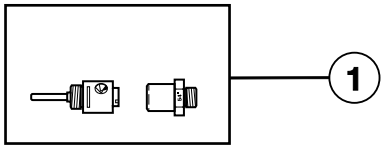


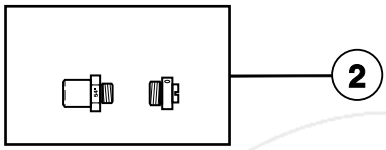


DRY2151P_506054

info@zipnasklade.ru
8(800)500-69-51


© Copyright, Alliance Laundry Systems LLC – DO NOT COPY or TRANSMIT

# Gas Conversion Kits

| REF | PART NO. | DESCRIPTION | COMMENTS |
|---|---|---|---|
| 1 | 599P3 | L.P. Conversion Kit | Used to convert dryers from Natural Gas (N.G.) or Mixed Gas to Liquid Petroleum Gas (L.P.) for 20,000 Btu; Models FGN16A*M3013, FGN17A*M3013, LGN27A*M3008, LGN27A*M3013, LGN37A*M3013, LGS17A*F3020, LGS17A*M3020, LGS17A*M3082, LGS27A*M3013, LGS27A*M3080, LGS37A*M3013, LGS37A*M3080, LGS38A*M3013, LGS38A*M3020, LGS40A*M3020, LGZ27A*M3013 and LGZ37A*M3013 |
| | 401P3 | L.P. Conversion Kit | Used to convert dryers from N.G. or Mixed Gas to L.P. for 20,000 Btu; Models ADG3TFWS301AW01, ADG3TRWS301AW01, ADG32FSS301AN01, FDG3TRGS301NW10, FGS17A*F3060, LGK37A*F3060, LGS17A*F3081, LGS37A*F3000, LGS37A*F3022, LGS37A*F3028, LGS37A*F3060, LGS37A*F3080 and LGZ37A*F3000 |
| | 649P3 | L.P. Conversion Kit | Used to convert dryers from N.G. or Mixed Gas to L.P. for 22,500 Btu; All other models |
| 2 | 402P3 | N.G. Conversion Kit | Used to convert dryers from L.P. to N.G. or Mixed Gas for 20,000 Btu; Models ADG3TFWS301AW01, ADG3TRWS301AW01, ADG32FSS301AN01, FDG3TRGS301NW10, FGS17A*F3060, LGK37A*F3060, LGS17A*F3081, LGS37A*F3000, LGS37A*F3022, LGS37A*F3028, LGS37A*F3060, LGS37A*F3080 and LGZ37A*F3000 |
| | 650P3 | N.G. Conversion Kit | Used to convert dryers from L.P. to N.G. or Mixed Gas for 22,500 Btu; Models ADG41FSS111TN03, AGZ17A*F1102, AGZ28A*F1102, AGZ68A*F1102, BDG30FGS111CW01, CDG3LRGS111CW01, CDG4BFGS111CW01, CGZ68A*F1102, FGZ17A*F1102, LDG3TRWS111TW05, LGH37A*F1182, LGH37A*F5423, LGS17A*K1180, LGS37A*F5412, LGS37A*F5423, LGT57A*F1100, LGT68A*F1100, LGY47A*F1109, LGZ27A*F1102, LGZ37A*F1102, LGZ57A*F1102, LGZ67A*F1102, MDG3TRWS111TW06, ZDG30RGS111CW01, ZDG3LRGS111CW01, ZDG41FSS111CN01, ZDG4BFGS111CW01 and ZDG4BRGS111CW01 |

*** Add Letter To Designate Color. G - Gray L - Almond Q - Bisque W - White**

info@zipnasklade.ru
8(800)500-69-51


© Copyright, Alliance Laundry Systems LLC – DO NOT COPY or TRANSMIT

# Gas Valve, Igniter, Ignition Control and Gas Conversion Kits

Models LGG37A*F3058, LGK37A*F3058, LGS37A*F3058, LGS37A*G3013,
LGS37A*G3080 and LGZ37A*G3013

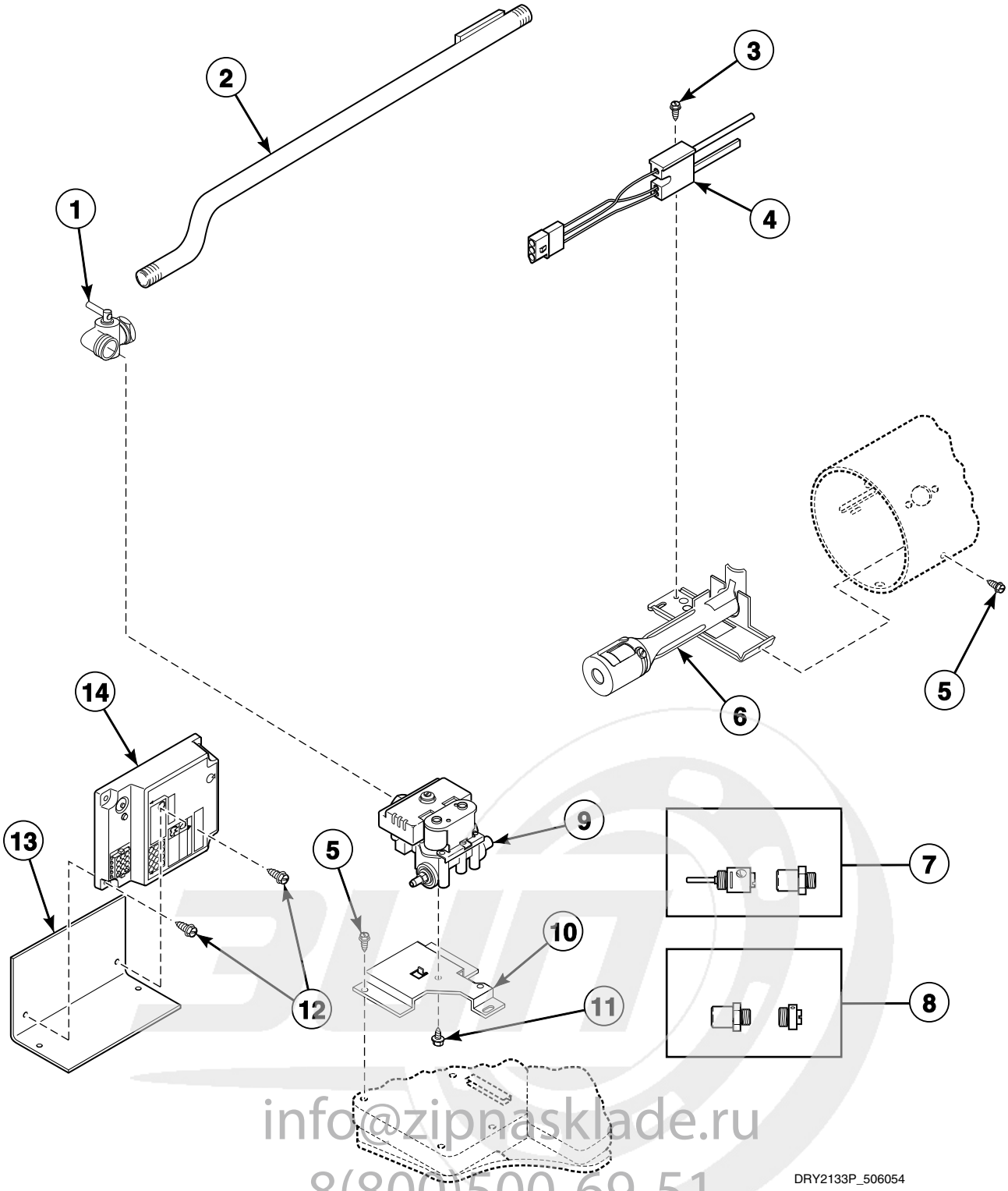


info@zipnasklade.ru
8(800)500-69-51


© Copyright, Alliance Laundry Systems LLC – DO NOT COPY or TRANSMIT

# Gas Valve, Igniter, Ignition Control and Gas Conversion Kits

| REF | PART NO. | DESCRIPTION | COMMENTS |
|---|---|---|---|
| 1 | 510205 | Elbow Shut-Off Valve | |
| 2 | 510204 | Lead-In Pipe Assembly | |
| 3 | 51782 | Screw | |
| 4 | 502995P | Igniter and Sensor Assembly | |
| 5 | 503688 | Screw | |
| 6 | 510149P | Burner Assembly | |
| 7 | 599P3 | L.P. Conversion Kit | Natural Gas (N.G.) to Liquid Petroleum Gas (L.P.); Models LGS37A*G3013, LGS37A*G3080 and LGZ37A*G3013 |
| | 401P3 | L.P. Conversion Kit | N.G. to L.P.; 20,000 Btu; All other models |
| 8 | 402P3 | N.G. Conversion Kit | L.P. to N.G.; 20,000 Btu; All other models |
| 9 | 502423P | Gas Valve Assembly | Includes 502423A Main and Redundant Coil |
| 10 | 510128 | Gas Valve Mounting Bracket | |
| 11 | 56124 | Screw | |
| 12 | 502535 | Screw | |
| 13 | 502425 | Ignition Control Bracket | |
| 14 | 502994P | Igniter Control | |

*** Add Letter To Designate Color. L - Almond Q - Bisque W - White**

info@zipnasklade.ru
8(800)500-69-51


© Copyright, Alliance Laundry Systems LLC – DO NOT COPY or TRANSMIT

# Burner Orifice Spuds - For Higher Elevations (Drawing 1 of 2)

Liquid Petroleum Gas Models

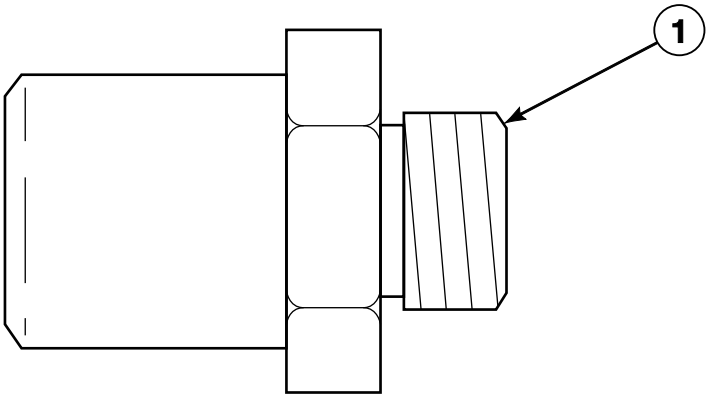


DRY2266P_506054

info@zipnasklade.ru
8(800)500-69-51


© Copyright, Alliance Laundry Systems LLC – DO NOT COPY or TRANSMIT

# Burner Orifice Spuds - For Higher Elevations (Drawing 1 of 2)

| REF | PART NO. | DESCRIPTION | COMMENTS |
|---|---|---|---|
| 1 | 58755 | L.P. Orifice | 22,500 Btu; 3000-7999 feet (915-2439 m); Models ADG41FSS111TN03, AGZ17A*F1102, AGZ28A*F1102, AGZ68A*F1102, BDG30FGS111CW01, CDG3LRGS111CW01, CDG4BFGS111CW01, CGZ68A*F1102, FGZ17A*F1102, LDG3TRWS111TW05, LGH37A*F1182, LGH37A*F5423, LGS17A*K1180, LGS37A*F5412, LGS37A*F5423, LGT57A*F1100, LGT68A*F1100, LGY47A*F1109, LGZ27A*F1102, LGZ37A*F1102, LGZ57A*F1102, LGZ67A*F1102, MDG3TRWS111TW06, ZDG30RGS111CW01, ZDG3LRGS111CW01, ZDG41FSS111CN01, ZDG4BFGS111CW01 and ZDG4BRGS111CW01 |
| | 503786 | L.P. Orifice | 22,500 Btu; 8000 feet (2440 m) and higher; ADG41FSS111TN03, AGZ17A*F1102, AGZ28A*F1102, AGZ68A*F1102, BDG30FGS111CW01, CDG3LRGS111CW01, CDG4BFGS111CW01, CGZ68A*F1102, FGZ17A*F1102, LDG3TRWS111TW05, LGH37A*F1182, LGH37A*F5423, LGS17A*K1180, LGS37A*F5412, LGS37A*F5423, LGT57A*F1100, LGT68A*F1100, LGY47A*F1109, LGZ27A*F1102, LGZ37A*F1102, LGZ57A*F1102, LGZ67A*F1102, MDG3TRWS111TW06, ZDG30RGS111CW01, ZDG3LRGS111CW01, ZDG41FSS111CN01, ZDG4BFGS111CW01 and ZDG4BRGS111CW01; All other models; 20,000 Btu; 4500-9499 feet (1370-2999 m) |
| | 60941 | L.P. Orifice | 20,000 Btu; 9500 feet (3000 m) and higher; All models except ADG41FSS111TN03, AGZ17A*F1102, AGZ28A*F1102, AGZ68A*F1102, BDG30FGS111CW01, CDG3LRGS111CW01, CDG4BFGS111CW01, CGZ68A*F1102, FGZ17A*F1102, LDG3TRWS111TW05, LGH37A*F1182, LGH37A*F5423, LGS17A*K1180, LGS37A*F5412, LGS37A*F5423, LGT57A*F1100, LGT68A*F1100, LGY47A*F1109, LGZ27A*F1102, LGZ37A*F1102, LGZ57A*F1102, LGZ67A*F1102, MDG3TRWS111TW06, ZDG30RGS111CW01, ZDG3LRGS111CW01, ZDG41FSS111CN01, ZDG4BFGS111CW01 and ZDG4BRGS111CW01 |

*** Add Letter To Designate Color. G - Gray L - Almond Q - Bisque W - White**

info@zipnasklade.ru
8(800)500-69-51


© Copyright, Alliance Laundry Systems LLC – DO NOT COPY or TRANSMIT

# Burner Orifice Spuds - For Higher Elevations (Drawing 2 of 2)

Natural Gas Models

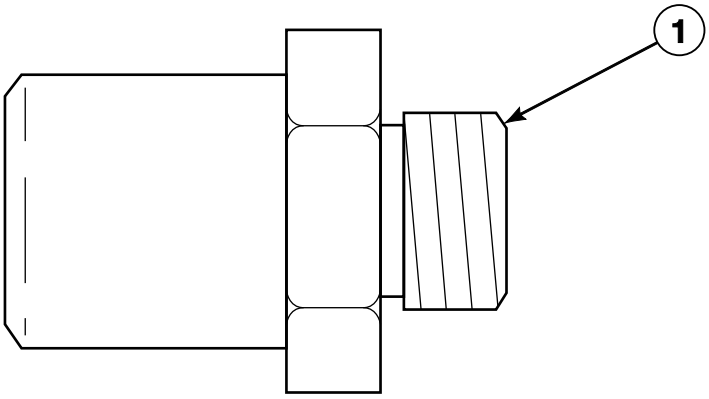


DRY2266P_506054

info@zipnasklade.ru
8(800)500-69-51


© Copyright, Alliance Laundry Systems LLC – DO NOT COPY or TRANSMIT

# Burner Orifice Spuds - For Higher Elevations (Drawing 2 of 2)

| REF | PART NO. | DESCRIPTION | COMMENTS |
|---|---|---|---|
| 1 | 503778 | N.G. Orifice | 22,500 Btu; 3000-5999 feet (915-1829 m); Models ADG41FSS111TN03, AGZ17A*F1102, AGZ28A*F1102, AGZ68A*F1102, BDG30FGS111CW01, CDG3LRGS111CW01, CDG4BFGS111CW01, CGZ68A*F1102, FGZ17A*F1102, LDG3TRWS111TW05, LGH37A*F1182, LGH37A*F5423, LGS17A*K1180, LGS37A*F5412, LGS37A*F5423, LGT57A*F1100, LGT68A*F1100, LGY47A*F1109, LGZ27A*F1102, LGZ37A*F1102, LGZ57A*F1102, LGZ67A*F1102, MDG3TRWS111TW06, ZDG30RGS111CW01, ZDG3LRGS111CW01, ZDG41FSS111CN01, ZDG4BFGS111CW01 and ZDG4BRGS111CW01 |
| | 58719 | Screw Orifice | 22,500 Btu; 6000-7999 feet (1830-2439 m); Models ADG41FSS111TN03, AGZ17A*F1102, AGZ28A*F1102, AGZ68A*F1102, BDG30FGS111CW01, CDG3LRGS111CW01, CDG4BFGS111CW01, CGZ68A*F1102, FGZ17A*F1102, LDG3TRWS111TW05, LGH37A*F1182, LGH37A*F5423, LGS17A*K1180, LGS37A*F5412, LGS37A*F5423, LGT57A*F1100, LGT68A*F1100, LGY47A*F1109, LGZ27A*F1102, LGZ37A*F1102, LGZ57A*F1102, LGZ67A*F1102, MDG3TRWS111TW06, ZDG30RGS111CW01, ZDG3LRGS111CW01, ZDG41FSS111CN01, ZDG4BFGS111CW01 and ZDG4BRGS111CW01 |
| | 503779 | N.G. Orifice | 22,500 Btu; 8000-8999 feet (2440-2739 m); ADG41FSS111TN03, AGZ17A*F1102, AGZ28A*F1102, AGZ68A*F1102, BDG30FGS111CW01, CDG3LRGS111CW01, CDG4BFGS111CW01, CGZ68A*F1102, FGZ17A*F1102, LDG3TRWS111TW05, LGH37A*F1182, LGH37A*F5423, LGS17A*K1180, LGS37A*F5412, LGS37A*F5423, LGT57A*F1100, LGT68A*F1100, LGY47A*F1109, LGZ27A*F1102, LGZ37A*F1102, LGZ57A*F1102, LGZ67A*F1102, MDG3TRWS111TW06, ZDG30RGS111CW01, ZDG3LRGS111CW01, ZDG41FSS111CN01, ZDG4BFGS111CW01 and ZDG4BRGS111CW01; All other models; 20,000 Btu; 2500-4499 feet (760-1369 m) |
| | 503780 | N.G. Orifice | 22,500 Btu; 9000-9999 feet (2740-3049 m); ADG41FSS111TN03, AGZ17A*F1102, AGZ28A*F1102, AGZ68A*F1102, BDG30FGS111CW01, CDG3LRGS111CW01, CDG4BFGS111CW01, CGZ68A*F1102, FGZ17A*F1102, LDG3TRWS111TW05, LGH37A*F1182, LGH37A*F5423, LGS17A*K1180, LGS37A*F5412, LGS37A*F5423, LGT57A*F1100, LGT68A*F1100, LGY47A*F1109, LGZ27A*F1102, LGZ37A*F1102, LGZ57A*F1102, LGZ67A*F1102, MDG3TRWS111TW06, ZDG30RGS111CW01, ZDG3LRGS111CW01, ZDG41FSS111CN01, ZDG4BFGS111CW01 and ZDG4BRGS111CW01; All other models; 20,000 Btu; 4500-5999 feet (1370-1829 m) |
| | 503781 | N.G. Orifice | 22,500 Btu; 10,000 feet (3050 m) and higher; ADG41FSS111TN03, AGZ17A*F1102, AGZ28A*F1102, AGZ68A*F1102, BDG30FGS111CW01, CDG3LRGS111CW01, CDG4BFGS111CW01, CGZ68A*F1102, FGZ17A*F1102, LDG3TRWS111TW05, LGH37A*F1182, LGH37A*F5423, LGS17A*K1180, LGS37A*F5412, LGS37A*F5423, LGT57A*F1100, LGT68A*F1100, LGY47A*F1109, LGZ27A*F1102, LGZ37A*F1102, LGZ57A*F1102, LGZ67A*F1102, MDG3TRWS111TW06, ZDG30RGS111CW01, ZDG3LRGS111CW01, ZDG41FSS111CN01, ZDG4BFGS111CW01 and ZDG4BRGS111CW01; All other models; 20,000 Btu; 6000-7499 feet (1830-2289 m) |
| | 503782 | N.G. Orifice | 20,000 Btu; 7500-9499 feet (2290-2899 m); All models except ADG41FSS111TN03, AGZ17A*F1102, AGZ28A*F1102, AGZ68A*F1102, BDG30FGS111CW01, CDG3LRGS111CW01, CDG4BFGS111CW01, CGZ68A*F1102, FGZ17A*F1102, LDG3TRWS111TW05, LGH37A*F1182, LGH37A*F5423, LGS17A*K1180, LGS37A*F5412, LGS37A*F5423, LGT57A*F1100, LGT68A*F1100, LGY47A*F1109, LGZ27A*F1102, LGZ37A*F1102, LGZ57A*F1102, LGZ67A*F1102, MDG3TRWS111TW06, ZDG30RGS111CW01, ZDG3LRGS111CW01, ZDG41FSS111CN01, ZDG4BFGS111CW01 and ZDG4BRGS111CW01 |

*** Add Letter To Designate Color. G - Gray L - Almond Q - Bisque W - White**

info@zipmaskade.ru
8(800)500 69 51


© Copyright, Alliance Laundry Systems LLC – DO NOT COPY or TRANSMIT

# Cabinet, Exhaust Duct and Base

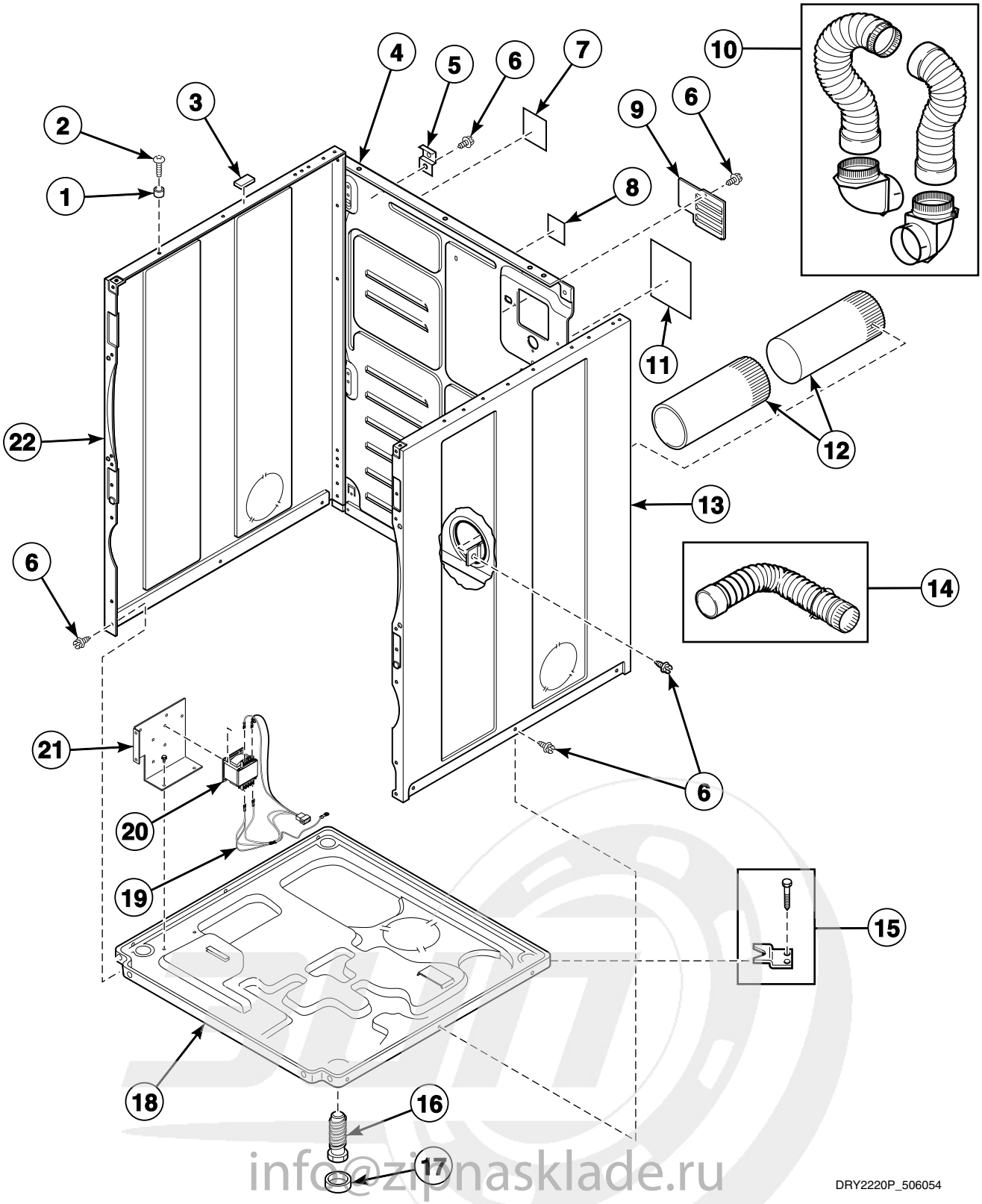


info@zipnasklade.ru
8(800)500-69-51


© Copyright, Alliance Laundry Systems LLC – DO NOT COPY or TRANSMIT

# Cabinet, Exhaust Duct and Base

| REF | PART NO. | DESCRIPTION | COMMENTS |
|---|---|---|---|
| | 122P4P | Porcelain Touch-Up Paint | White |
| | 370P4P | Porcelain Touch-Up Paint | Bisque |
| | 215P4P | Porcelain Touch-Up Paint | Almond |
| 1 | 56079 | Panel Locator | |
| 2 | 512921 | Screw | Use with stainless steel panels |
| | 39733 | Screw | |
| 3 | 56128 | Bumper Pad | |
| 4 | 510005P | Cabinet Rear Panel | |
| 5 | 510136 | Top Hinge | |
| 6 | 503688 | Screw | |
| 7 | 511004 | Gas Clearance Label | Gas models |
| 8 | 803260 | Warning Label | Disconnect power; Models ADE3TFWS431AW01, ADE3TRWS431AW01, ADE3TRWS431NW22, ADE32FSS431AN01, ADE32FSS431NN22, ADE32FSS541RN01, ADE41FSS171TN03, ADG41FSS111TN03, BDE30FGS171CW01, CDE3LRGS171CW01, CDE4BFGS171CW01, FDE3TRGS301NW10, FDE3TRGS401NW22, FEN17A*G3018, FEN17A*G4018, FES17A*F3300, FES17A*F4350, FEU17A*F1702, FEZ17A*F1702, LDE3TRWS331TW05, LED17A*F1700, LEH37A*F3300, LEN27A*G3008, LEN27A*G3018, LEN27A*G4008, LEN27A*G4018, LES17A*F3000, LES17A*F3007, LES17A*F3022, LES17A*F4500, LES27A*G3018, LES27A*G4500, LES27A*G4518, LES27A*G4018, LES28A*G4018, LES33A*F4562, LES37A*F3000, LES37A*F3300, LES37A*F4350, LES37A*F5412, LEZ27A*F1702, LEZ27A*G3018, LEZ27A*G4018, LEZ37A*F3000, MDE3TRWS331TW06, ZDE30RGS171CW01, ZDE3LRGS171CW01, ZDE41FSS171CN01, ZDE4BFGS171CW01 and ZDE4BRGS171CW01 |
| 9 | 510903 | Access Panel Plate | |
| 10 | 521P3 | Flexible Venting Kit | |
| 11 | 511005 | Electric Clearance Label | Electric models |
| 12 | 510137 | Exhaust Duct | Each dryer requires 2 pieces |
| 13 | 512952 | Cabinet Side Panel | Stainless steel; Right; Models ADE32FSS431AN01, ADE32FSS431NN22, ADE32FSS541RN01, ADE41FSS171TN03, ADG32FSS301AN01, ADG41FSS111TN03, ZDE41FSS171CN01 and ZDG41FSS111CN01 |
| | 510002WP | Cabinet Side Panel | White; Right; All other models |
| | 510002LP | Cabinet Side Panel | Almond; Right; All other models |
| | 510002QP | Cabinet Side Panel | Bisque; Right; All other models |
| | 510002GP | Cabinet Side Panel | Gray; Right; All other models |
| 14 | 528P3 | Directional Exhaust Kit | Used to vent dryer out the sides or bottom |
| 15 | 526P3 | Hold Down Kit | For mobile home installations |
| 16 | 510135 | Leveling Leg | |
| 17 | 501855 | Rubber Foot | |
| 18 | 513901 | Dryer Base | |
| 19 | 511303 | Wire Harness Assembly | Transformer adapter; Includes 502592 Fuse (3.15 Amp, 250 Volt); Models ADG3TFWS301AW01, ADG32FSS301AN01, FGN16A*M3013, FGN17A*M3013 and FGS17A*F3060 |
| 20 | 511658P | Transformer Kit | Includes item 18; Models ADG3TFWS301AW01, ADG32FSS301AN01, FGN16A*M3013, FGN17A*M3013 and FGS17A*F3060 |
| 21 | 511859 | Contactor Bracket | Models ADG3TFWS301AW01, ADG32FSS301AN01, FGN16A*M3013, FGN17A*M3013 and FGS17A*F3060 |
| 22 | 512951 | Cabinet Side Panel | Stainless steel; Left; Models ADE32FSS431AN01, ADE32FSS431NN22, ADE32FSS541RN01, ADE41FSS171TN03, ADG32FSS301AN01, ADG41FSS111TN03, ZDE41FSS171CN01 and ZDG41FSS111CN01 |
| | 510001WP | Cabinet Side Panel | White; Left; All other models |
| | 510001LP | Cabinet Side Panel | Almond; Left; All other models |
| | 510001QP | Cabinet Side Panel | Bisque; Left; All other models |
| | 510001GP | Cabinet Side Panel | Gray; Left; All other models |

*** Add Letter To Designate Color. G - Gray L - Almond Q - Bisque W - White**

info@zipnasklade.ru
8(800)500-69-51


© Copyright, Alliance Laundry Systems LLC – DO NOT COPY or TRANSMIT

# Power Cord

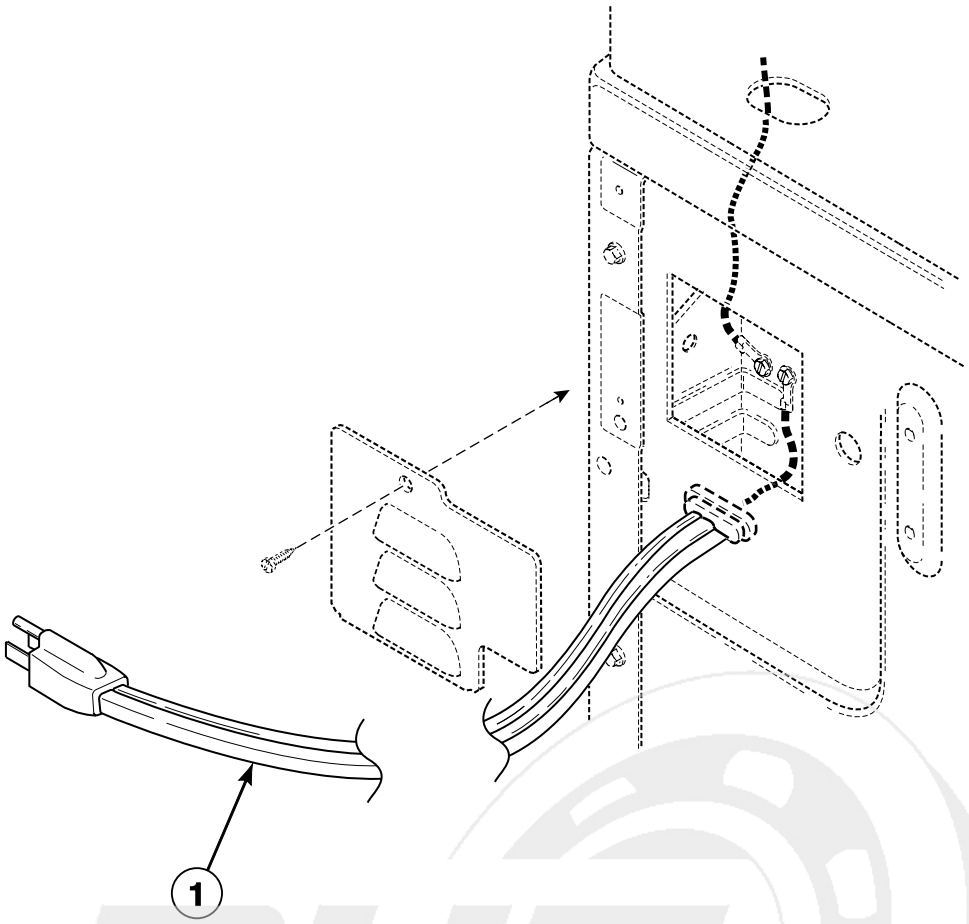


DRY1866PA_506054

info@zipnasklade.ru
8(800)500-69-51


© Copyright, Alliance Laundry Systems LLC – DO NOT COPY or TRANSMIT

# Power Cord

| REF | PART NO. | DESCRIPTION | COMMENTS |
|---|---|---|---|
| 1 | 510505P | Lead-In Cord Assembly | Models AEZ17A*F1702, AEZ28A*F1702, AEZ68A*F1702, BDE30FGS171CW01, CDE3LRGS171CW01, CDE4BFGS171CW01, CEZ68A*F1702, FEU17A*F1702, FEZ17A*F1702, LEB07A*F1709, LED17A*F1700, LET57A*F1700, LET67A*F1700, LET68A*F1700, LEY47A*F1709, LEZ27A*F1502, LEZ27A*F1702, LEZ37A*F1702, LEZ57A*F1702, LEZ67A*F1702, ZDE30RGS171CW01, ZDE3LRGS171CW01, ZDE41FSS171CN01, ZDE4BFGS171CW01 and ZDE4BRGS171CW01 |
| | 61605P | Lead-In Cord Kit | Models ADE3TFWS431AW01, ADE3TRWS431AW01, ADE32FSS431AN01, FES17A*F4350, LEG37A*F4350, LEK37A*F4350 and LES37A*F4350 |
| | N/A | Lead-In Cord | Models LGG37A*F3058, LGK37A*F3058, LGK37A*F3060, LGS37A*F3022, LGS37A*F3058, LGS37A*F3080, LGS37A*G3013, LGS37A*G3080 and LGZ37A*G3013 |
| | 503597 | Lead-In Cord Assembly | Models ADE3TRWS431NW22, ADE32FSS431NN22, FEN17A*G3018, LEN27A*G3008, LEN27A*G3018, LEN37A*G3018, LES27A*G3018, LES27A*G4518, LES37A*G3018, LEZ27A*G3018, LEZ37A*F3000, LEZ37A*G3018, LEZ37A*G5618 and LGN27A*M3008 |
| | 56222 | Lead-In Cord | Models ADG41FSS111TN03, AGZ17A*F1102, AGZ28A*F1102, AGZ68A*F1102, BDG30FGS111CW01, CDG3LRGS111CW01, CDG4BFGS111CW01, CGZ68A*F1102, FGZ17A*F1102, LDG3TRWS111TW05, LGH37A*F1182, LGS17A*K1180, LGT57A*F1100, LGT68A*F1100, LGY47A*F1109, LGZ27A*F1102, LGZ37A*F1102, LGZ57A*F1102, LGZ67A*F1102, MDG3TRWS111TW06, ZDG30RGS111CW01, ZDG3LRGS111CW01, ZDG41FSS111CN01, ZDG4BFGS111CW01 and ZDG4BRGS111CW01 |
| | 513632 | Lead-In Cord | Model LES33A*F4562 |
| | 59373 | Lead-In Cord | Models LES17A*M4588, LGH37A*F5423, LGS17A*F3020, LGS17A*F3081, LGS17A*M3020, LGS17A*M3082, LGS37A*F5412, LGS37A*F5423, LGS38A*M3020 and LGS40A*M3020 |
| | 506081 | Power Cord Assembly | Models FGN16A*M3013, FGN17A*M3013, LGN27A*M3008, LGN27A*M3013, LGN37A*M3013, LGS27A*M3013, LGS27A*M3080, LGS37A*M3013, LGS37A*M3080, LGS38A*M3013, LGZ27A*M3013 and LGZ37A*M3013 |
| | 505945 | Power Cord Assembly | Model LGS37A*F3028 |
| | 506106 | Lead-In Cord Assembly | Models LEN27A*G4008, LEN27A*G99M3 and LES27A*G4000 |
| | 512019 | Lead-In Cord | Models ADG3TFWS301AW01, ADG3TRWS301AW01, ADG32FSS301AN01, FGS17A*F3060 and LGS37A*F3060 |

*** Add Letter To Designate Color. G - Gray L - Almond Q - Bisque W - White**
**N/A = Part no longer available**

info@zipnasklade.ru
8(800)500-69-51


© Copyright, Alliance Laundry Systems LLC – DO NOT COPY or TRANSMIT

# Strain Relief

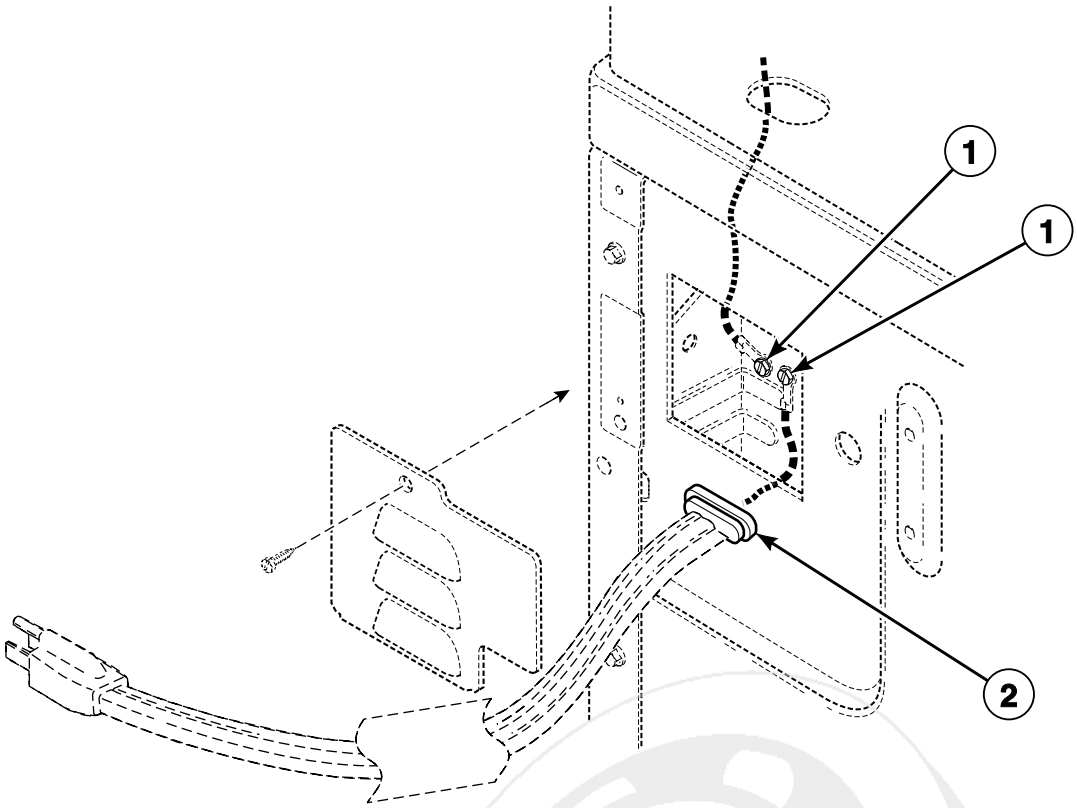


DRY1866PB_506054

info@zipnasklade.ru
8(800)500-69-51


© Copyright, Alliance Laundry Systems LLC – DO NOT COPY or TRANSMIT

# Strain Relief

| REF | PART NO. | DESCRIPTION | COMMENTS |
|---|---|---|---|
| | 502496 | Strain Relief Adapter | |
| 1 | 513071 | Screw | Models ADE32FSS431AN01, ADE32FSS431NN22, ADE32FSS541RN01, ADG32FSS301AN01 and LGS40A*M3020 |
| | 20530 | Screw | All other models |
| 2 | 52113 | Strain Relief | Models ADE3TFWS431AW01, ADE3TRWS431AW01, ADE3TRWS431NW22, ADE32FSS431AN01, ADE32FSS431NN22, FEN17A*G3018, FES17A*F4350, LEG37A*F4350, LEK37A*F4350, LEN27A*G3008, LEN27A*G3018, LEN37A*G3018, LES27A*G3018, LES27A*G4518, LES33A*F4562, LES37A*F4350, LES37A*G3018, LEZ27A*G3018, LEZ37A*G3018, LEZ37A*G5618, LGH37A*F5423, LGS17A*F3020, LGS17A*F3081, LGS37A*F5412 and LGS37A*F5423 |
| | 60298 | Strain Relief | Models ADG3TRWS301AW01, LGK37A*F3060 and LGS37A*F3060 |
| | N/A | Strain Relief | Models LGG37A*F3058, LGK37A*F3058 and LGS37A*F3058 |
| | 38384 | Strain Relief | Models ADG41FSS111TN03, AGZ17A*F1102, AGZ28A*F1102, AGZ68A*F1102, BDG30FGS111CW01, CDG3LRGS111CW01, CDG4BFGS111CW01, CGZ68A*F1102, FGZ17A*F1102, LDG3TRWS111TW05, LGH37A*F1182, LGS17A*K1180, LGS37A*F3028, LGT57A*F1100, LGT68A*F1100, LGY47A*F1109, LGZ27A*F1102, LGZ37A*F1102, LGZ57A*F1102, LGZ67A*F1102, MDG3TRWS111TW06, ZDG30RGS111CW01, ZDG3LRGS111CW01, ZDG41FSS111CN01, ZDG4BFGS111CW01 and ZDG4BRGS111CW01 |
| | 502500 | Strain Relief | Models FGN16A*M3013, FGN17A*M3013, LES17A*M4588, LGN27A*M3013, LGN37A*M3013, LGS17A*M3020, LGS17A*M3082, LGS27A*M3013, LGS27A*M3080, LGS37A*G3013, LGS37A*G3080, LGS37A*M3013, LGS37A*M3080, LGS38A*M3013, LGS38A*M3020, LGS40A*M3020, LGZ27A*M3013, LGZ37A*G3013 and LGZ37A*M3013 |

*** Add Letter To Designate Color. G - Gray L - Almond Q - Bisque W - White**

**N/A = Part no longer available**

info@zipnasklade.ru
8(800)500-69-51


© Copyright, Alliance Laundry Systems LLC – DO NOT COPY or TRANSMIT

# Terminal Block and Terminals

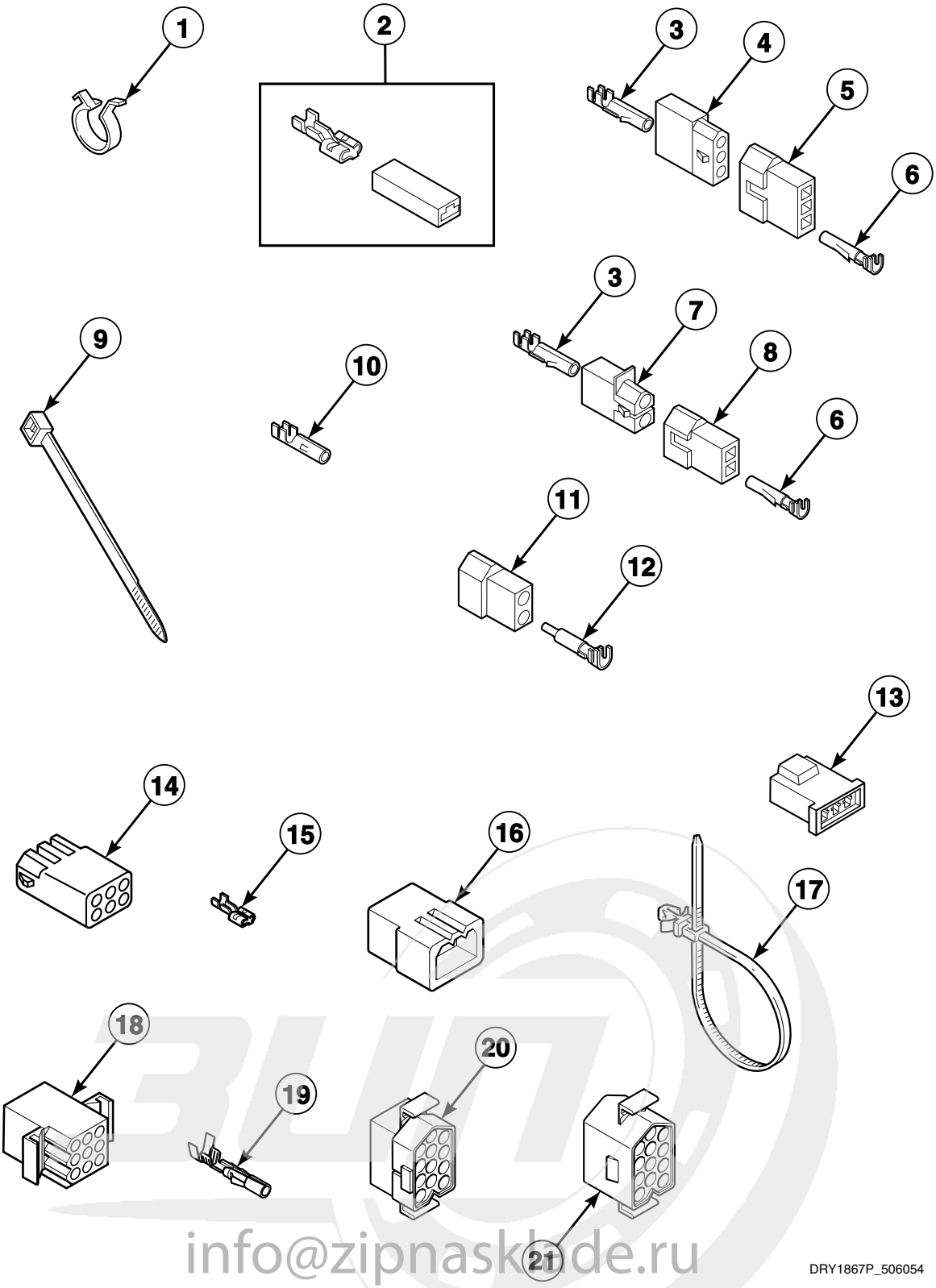


info@zipnasklade.ru
8(800)500-69-51


© Copyright, Alliance Laundry Systems LLC – DO NOT COPY or TRANSMIT

# Terminal Block and Terminals

| REF | PART NO. | DESCRIPTION | COMMENTS |
|---|---|---|---|
| 1 | 504034 | Wire Clip | 11/16 inch |
| | 687500 | Wire Clip | 1 inch |
| 2 | 00360 | Insulated Female Spade Terminal | (1) 12 gauge wire or (2) 18 gauge wires |
| 3 | 00117 | Female Pin Terminal | |
| 4 | 23039 | 3 Circuit Receptacle | |
| 5 | 23040 | Plug | |
| 6 | 00116 | Male Pin Terminal | |
| 7 | 56451 | 2 Circuit Receptacle | |
| 8 | 56448 | 2 Circuit Plug | |
| 9 | 55881 | Harness Strap | |
| 10 | 00130 | Female Pin Terminal | 1/8 inch |
| 11 | 56266 | 2 Circuit Plug | |
| 12 | 00127 | Male Pin Terminal | 1/8 inch |
| 13 | 58800 | 3 Circuit Connector | |
| 14 | 26708 | 6 Circuit Receptacle | |
| 15 | 00222 | Female Spade Terminal | 1/4 inch |
| 16 | 23033 | 9 Circuit Plug | |
| 17 | 38663 | Wire Tie | |
| 18 | 26163 | 9 Circuit Receptacle | |
| 19 | 00128 | Female Pin Terminal | 1/8 inch |
| | 00129 | Male Pin Terminal | 1/8 inch |
| 20 | 54522 | Plug | |
| 21 | 56855 | 12 Circuit Receptacle | |

info@zipnasklade.ru
8(800)500-69-51


© Copyright, Alliance Laundry Systems LLC – DO NOT COPY or TRANSMIT

# Terminals

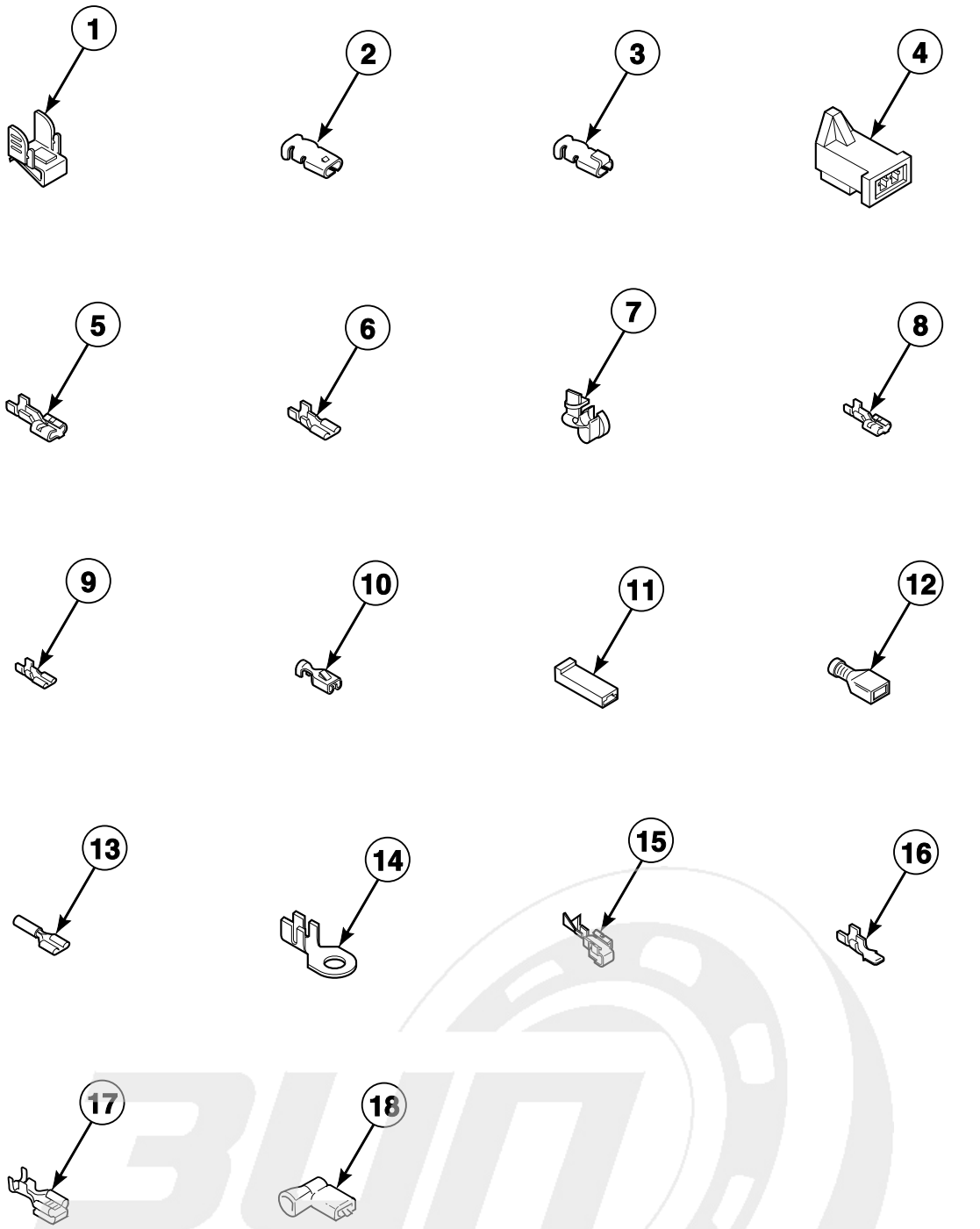


D322P_506054

info@zipnasklade.ru
8(800)500-69-51


© Copyright, Alliance Laundry Systems LLC – DO NOT COPY or TRANSMIT

# Terminals

| REF | PART NO. | DESCRIPTION | COMMENTS |
|---|---|---|---|
| 1 | 00161 | Grounding Clip | |
| 2 | 00189 | Female Spade Terminal | |
| 3 | 00361 | Female Piggyback Terminal | Receptacle connector |
| 4 | 58799 | 2 Circuit Connector | |
| 5 | 00223 | Female Spade Terminal | 1/4 inch; (1) 18 gauge wire |
| | 00121 | Female Spade Terminal | 1/4 inch; (2) 18 gauge wires or (1) 12 gauge wire |
| | 00245 | Spade Terminal | 1/4 inch; (1) 22 gauge wire |
| 6 | 00124 | Female Spade Terminal | 3/16 inch; (1) 18 gauge wire; .020 tab |
| | 00156 | Female Spade Terminal | 3/16 inch; Thermostat wire; .032 tab |
| | N/A | Female Spade Terminal | 3/16 inch; (2) 18 gauge wires; .020 tab |
| 7 | 38384 | Strain Relief | |
| 8 | N/A | Terminal | |
| 9 | 00347 | Terminal | |
| 10 | 00115 | Female Spade Terminal | 1/4 inch; (1) 18 gauge wire |
| | N/A | Female Spade Terminal | 1/4 inch; (2) 18 gauge wires or (1) 12 gauge wire |
| 11 | 90789 | Receptacle Housing | |
| 12 | 00359 | Insulated Female Spade Terminal | 1/4 inch |
| | 00165 | Insulated Female Terminal | 3/16 inch |
| 13 | N/A | Pre-Insulated Spade Terminal | 1/4 inch; 12 gauge and 18 gauge wire |
| 14 | 00110 | Ring Terminal | 10 stud; (1) 18 gauge wire |
| | 00111 | Ring Terminal | 10 stud; (2) 18 gauge wires or (1) 12 gauge wire |
| 15 | 00114 | Female Spade Terminal | 1/4 inch; Double connector |
| 16 | 00139 | Male Tab Terminal | 1/4 inch; (2) 18 gauge wires or (1) 12 gauge wire |
| 17 | 00344 | Female Tab Terminal | |
| 18 | N/A | Flag Insulated Terminal | |

**N/A = Part no longer available**

info@zipnasklade.ru
8(800)500-69-51


© Copyright, Alliance Laundry Systems LLC – DO NOT COPY or TRANSMIT

# Motor Connection Block, Terminal Extractor Tools

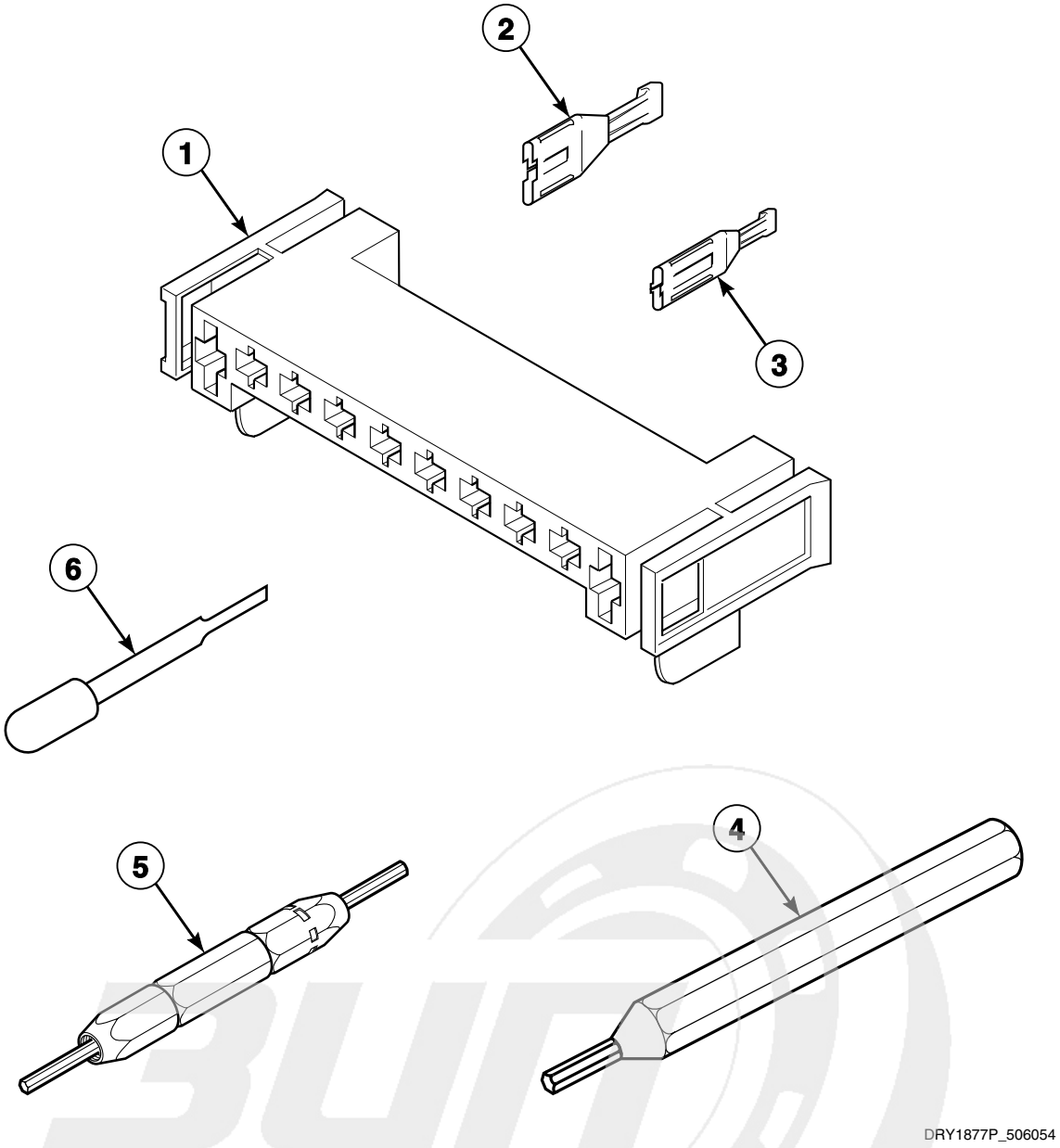


info@zipnasklade.ru
8(800)500-69-51


© Copyright, Alliance Laundry Systems LLC – DO NOT COPY or TRANSMIT

# Motor Connection Block, Terminal Extractor Tools

| REF | PART NO. | DESCRIPTION | COMMENTS |
|---|---|---|---|
| **1** | 500338 | 10 Position Housing | |
| **2** | 00255 | Female Terminal | 1/4 inch; For (1) 12 gauge wire |
| | 00256 | Female Terminal | 1/4 inch; For (1) or (2) 18 gauge wires |
| **3** | 00188 | Female Terminal | For 1 or 2 wire application |
| **4** | 128P4 | Extractor Tool | For use on gas dryer terminals |
| **5** | 190P4 | Extractor Tool | For use on electric dryer terminals |
| **6** | 283P4 | Terminal Extractor Tool | For use on Molex connectors |

info@zipnasklade.ru
8(800)500-69-51


© Copyright, Alliance Laundry Systems LLC – DO NOT COPY or TRANSMIT

# Wire Harnesses and Wires - Front Control Models (Drawing 1 of 3)

All Front Control Models Except ADE41FSS171TN03, BDE30FGS171CW01,
ZDE41FSS171CN01 and ZDE4BFGS171CW01

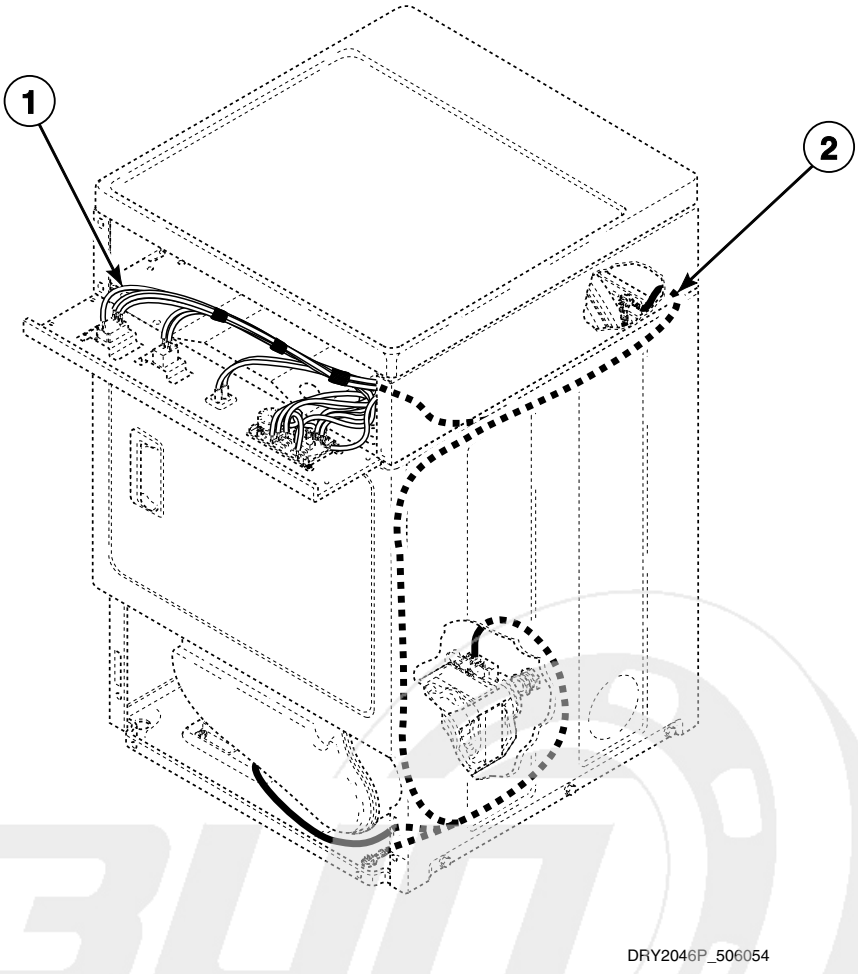


info@zipnasklade.ru
8(800)500-69-51


© Copyright, Alliance Laundry Systems LLC – DO NOT COPY or TRANSMIT

# Wire Harnesses and Wires - Front Control Models (Drawing 1 of 3)

| REF | PART NO. | DESCRIPTION | COMMENTS |
|---|---|---|---|
| | 45380 | 12 Gauge Wire | Orange; Order wire by the foot; Order terminals and connectors as required |
| | 45001 | 18 Gauge Wire | Black; Order wire by the foot; Order terminals and connectors as required |
| 1 | 511323 | Security Cabinet Harness Assembly | Models BDG30FGS111CW01 and FGZ17A*F1102 |
| | 511324P | Security Cabinet Harness | Models FEU17A*F1702 and FEZ17A*F1702 |
| | 511752P | Security Cabinet Harness Assembly | Models FEN17A*G3018, FES17A*F3300 and FES17A*F4350 |
| | 511767 | Security Cabinet Harness Assembly | Models ADG3TFWS301AW01 and FGS17A*F3060 |
| | 511306P | Security Cabinet Harness Assembly | Models FEN16A*G4018, FEN17A*G4018, FES16A*G4018, FGN16A*M3013 and FGN17A*M3013 |
| | 511770 | Security Cabinet Harness Assembly | Models ADE32FSS431AN01, ADE32FSS431NN22, ADE32FSS541RN01, ADG32FSS301AN01, CDE4BFGS171CW01 and CEZ68A*F1702 |
| | 511771 | Security Cabinet Harness Assembly | Models ADG32FSS301AN01, ADG41FSS111TN03, CDG4BFGS111CW01, CGZ68A*F1102, ZDG41FSS111CN01 and ZDG4BFGS111CW01 |
| | 513384 | Security Cabinet Harness Assembly | Model ADE3TFWS431AW01 |
| 2 | 511304 | Wire Harness Assembly | Models FEN16A*G4018, FEN17A*G4018 and FES16A*G4018 |
| | 511329 | Wire Harness Assembly | Models BDG30FGS111CW01 and FGZ17A*F1102 |
| | 511330 | Wire Harness Assembly | Models FEU17A*F1702 and FEZ17A*F1702 |
| | 511754 | Wire Harness Assembly | Models ADE3TFWS431AW01, FEN17A*G3018, FES17A*F3300 and FES17A*F4350 |
| | 511779 | Wire Harness Assembly | Models ADG3TFWS301AW01 and FGS17A*F3060 |
| | 511773P | Wire Harness Assembly | Models FGN16A*M3013 and FGN17A*M3013 |
| | 511768P | Wire Harness Assembly | Models CDE4BFGS171CW01 and CEZ68A*F1702 |
| | 511769P | Wire Harness Assembly | Models ADG41FSS111TN03, CDG4BFGS111CW01, CGZ68A*F1102, ZDG41FSS111CN01 and ZDG4BFGS111CW01 |
| | 513451 | Wire Harness Assembly | Model ADG32FSS301AN01 |
| | 513452 | Wire Harness Assembly | Models ADE32FSS431AN01, ADE32FSS431NN22 and ADE32FSS541RN01 |

*** Add Letter To Designate Color. G - Gray L - Almond Q - Bisque W - White**

**NOTE: Individual wires are not available separately. Order complete harness, or order wire by the foot. When applying terminals to wires, it is recommended that the terminals be soldered to the wires.**

info@zipnasklade.ru
8(800)500-69-51


© Copyright, Alliance Laundry Systems LLC – DO NOT COPY or TRANSMIT

# Wire Harnesses and Wires - Front Control Models (Drawing 2 of 3)

Models ADE41FSS171TN03, BDE30FGS171CW01, ZDE41FSS171CN01 and ZDE4BFGS171CW01
Models Through Serial No. 1303025314

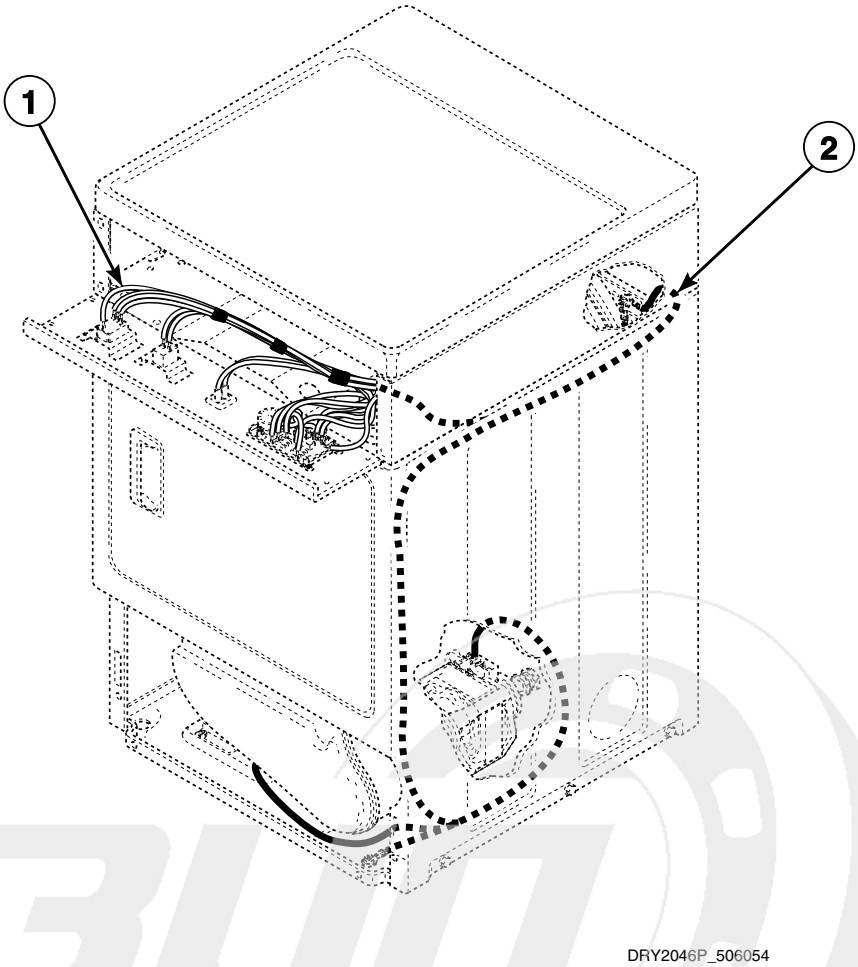


info@zipnasklade.ru
8(800)500-69-51


© Copyright, Alliance Laundry Systems LLC – DO NOT COPY or TRANSMIT

# Wire Harnesses and Wires - Front Control Models (Drawing 2 of 3)

| REF | PART NO. | DESCRIPTION | COMMENTS |
|---|---|---|---|
| | 45380 | 12 Gauge Wire | Orange; Order wire by the foot; Order terminals and connectors as required |
| | 45001 | 18 Gauge Wire | Black; Order wire by the foot; Order terminals and connectors as required |
| 1 | 511324P | Security Cabinet Harness | Model BDE30FGS171CW01 |
| | 511770 | Security Cabinet Harness Assembly | Models ADE41FSS171TN03, ZDE41FSS171CN01 and ZDE4BFGS171CW01 |
| 2 | 511330 | Wire Harness Assembly | Model BDE30FGS171CW01 |
| | 511768P | Wire Harness Assembly | Models ADE41FSS171TN03, ZDE41FSS171CN01 and ZDE4BFGS171CW01 |

**NOTE: Individual wires are not available separately. Order complete harness, or order wire by the foot. When applying terminals to wires, it is recommended that the terminals be soldered to the wires.**

info@zipnasklade.ru
8(800)500-69-51


© Copyright, Alliance Laundry Systems LLC – DO NOT COPY or TRANSMIT

# Wire Harnesses and Wires - Front Control Models (Drawing 3 of 3)

Models ADE41FSS171TN03, BDE30FGS171CW01, ZDE41FSS171CN01 and ZDE4BFGS171CW01
Models Starting Serial No. 1303025315

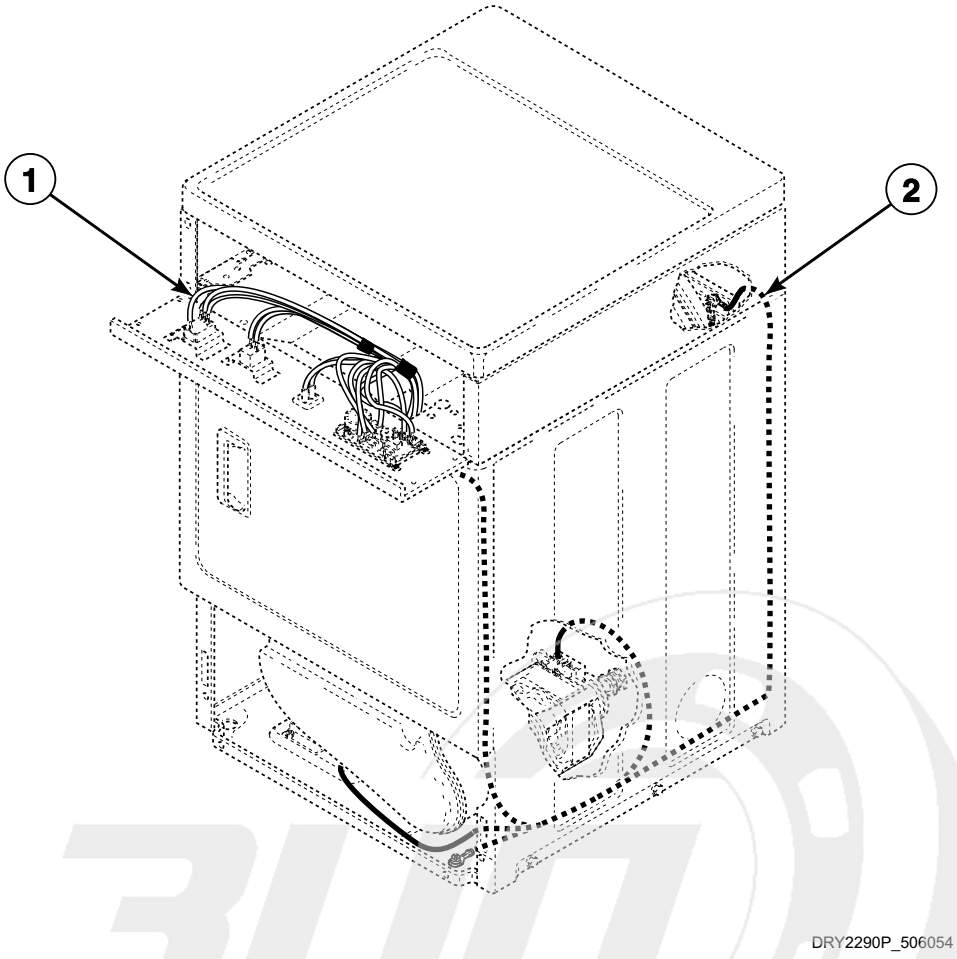


info@zipnasklade.ru
8(800)500-69-51


© Copyright, Alliance Laundry Systems LLC – DO NOT COPY or TRANSMIT

# Wire Harnesses and Wires - Front Control Models (Drawing 3 of 3)

| REF | PART NO. | DESCRIPTION | COMMENTS |
|---|---|---|---|
| | 45380 | 12 Gauge Wire | Orange; Order wire by the foot; Order terminals and connectors as required |
| | 45001 | 18 Gauge Wire | Black; Order wire by the foot; Order terminals and connectors as required |
| 1 | 511324P | Security Cabinet Harness | Model BDE30FGS171CW01 |
| | 511770 | Security Cabinet Harness Assembly | Models ADE41FSS171TN03, ZDE41FSS171CN01 and ZDE4BFGS171CW01 |
| 2 | 513948 | Wire Harness Assembly | Model BDE30FGS171CW01 |
| | 513876 | Harness Assembly | Models ADE41FSS171TN03, ZDE41FSS171CN01 and ZDE4BFGS171CW01 |

**NOTE: Individual wires are not available separately. Order complete harness, or order wire by the foot. When applying terminals to wires, it is recommended that the terminals be soldered to the wires.**

info@zipnasklade.ru
8(800)500-69-51


© Copyright, Alliance Laundry Systems LLC – DO NOT COPY or TRANSMIT

# Wire Harnesses and Wires - Rear Control Models Through Serial No. 1207

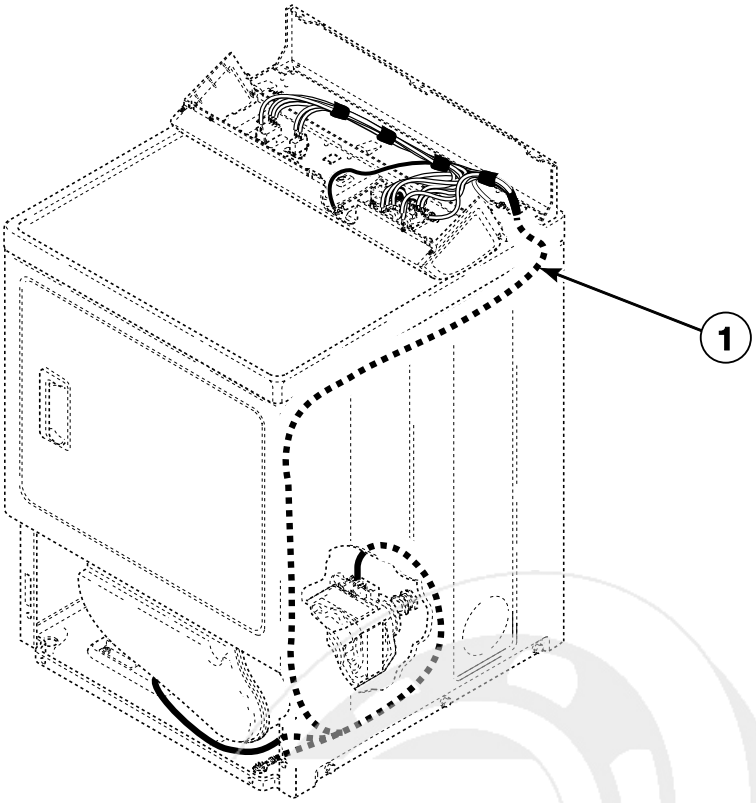


DRY2047P_506054

info@zipnasklade.ru
8(800)500-69-51


© Copyright, Alliance Laundry Systems LLC – DO NOT COPY or TRANSMIT

# Wire Harnesses and Wires - Rear Control Models Through Serial No. 1207

| REF | PART NO. | DESCRIPTION | COMMENTS |
|---|---|---|---|
| | 45380 | 12 Gauge Wire | Orange; Order wire by the foot; Order terminals and connectors as required |
| | 45477 | 12 Gauge Wire | Green/yellow stripe; Order wire by the foot; Order terminals and connectors as required |
| | 45001 | 18 Gauge Wire | Black; Order wire by the foot; Order terminals and connectors as required |
| 1 | 510420P | Wire Harness Assembly | Models ADE3TRWS431AW01, ADE3TRWS431NW22, FDE3TRGS301NW10, LDE3TRWS331TW05, LEG37A*F4350, LEH37A*F3300, LEK37A*F4350, LES17A*F3000, LES17A*F3007, LES17A*F3022, LES17A*F4500, LES17A*M4588, LES37A*F3000, LES37A*F3028, LES37A*F3300, LES37A*F3327, LES37A*F4350, LES37A*F5412, LEZ37A*F3000 and MDE3TRWS331TW06 |
| | 510460 | Wire Harness Assembly | Models LEN27A*G3008, LEN27A*G3018, LEN37A*G3018, LES27A*G3018, LES37A*G3018, LEZ27A*G3018, LEZ37A*G3018 and LEZ37A*G5618 |
| | 510444 | Wire Harness Assembly | Models AEZ28A*F1702, AEZ68A*F1702, CDE3LRGS171CW01, LET57A*F1700, LET67A*F1700, LET68A*F1700, LEZ57A*F1702, LEZ67A*F1702, ZDE3LRGS171CW01 and ZDE4BRGS171CW01 |
| | 511301P | Wire Harness Assembly | Models LGN27A*M3008, LGN27A*M3013, LGN37A*M3013, LGS27A*M3013, LGS27A*M3080, LGS37A*F3028, LGS37A*M3013, LGS37A*M3080, LGZ27A*M3013 and LGZ37A*M3013 |
| | N/A | Wire Harness Assembly | Models LEB07A*F1709, LEY47A*F1709, LGG37A*F3058, LGK37A*F3058, LGS17A*F3020, LGS17A*F3081, LGS17A*M3020, LGS17A*M3082, LGS37A*F3058, LGT57A*F1100, LGT68A*F1100, LGY47A*F1109, LGZ37A*G3013, LGZ57A*F1102 and LGZ67A*F1102 |
| | 510425P | Wire Harness Assembly | Models AGZ17A*F1102, LGS17A*K1180 and ZDG30RGS111CW01 |
| | 510423 | Wire Harness Assembly | Models FDG3TRGS301NW10, LGH37A*F5423, LGS37A*F3000, LGS37A*F3022, LGS37A*F3080, LGS37A*F5412, LGS37A*F5423 and LGZ37A*F3000 |
| | 510403 | Wire Harness Assembly | Models LDG3TRWS111TW05, LGH37A*F1182, LGZ27A*F1102, LGZ37A*F1102 and MDG3TRWS111TW06 |
| | 510402P | Wire Harness Assembly | Models AEZ17A*F1702, LED17A*F1700, LEZ27A*F1502, LEZ27A*F1702, LEZ37A*F1702 and ZDE30RGS171CW01 |
| | 510478 | Wire Harness Assembly | Models FDE3TRGS401NW22, LEN27A*G4008, LEN27A*G4018, LEN27A*G99M3, LEN37A*G4018, LES27A*G4000, LES27A*G4018, LES37A*G4018, LEZ27A*G4018 and LEZ37A*G4018 |
| | 511342 | Wire Harness Assembly | Model LES28A*G4018 |
| | 511785 | Wire Harness Assembly | Models LGS38A*M3013, LGS38A*M3020 and LGS40A*M3020 |
| | 511777 | Wire Harness Assembly | Models AGZ28A*F1102, CDG3LRGS111CW01 and ZDG3LRGS111CW01 |
| | 510443P | Wire Harness Assembly | Models AGZ68A*F1102 and ZDG4BRGS111CW01 |
| | 511335 | Wire Harness Assembly | Models ADG3TRWS301AW01, LGK37A*F3060 and LGS37A*F3060 |

*** Add Letter To Designate Color. G - Gray L - Almond Q - Bisque W - White**

**N/A = Part no longer available**

**NOTE: Individual wires are not available separately. Order complete harness, or order wire by the foot. When applying terminals to wires, it is recommended that the terminals be soldered to the wires.**

info@zipnasklad.ru
8(800)500-69-51


© Copyright, Alliance Laundry Systems LLC – DO NOT COPY or TRANSMIT

# Wire Harnesses and Wires - Rear Control Models
# Starting Serial No. 1207

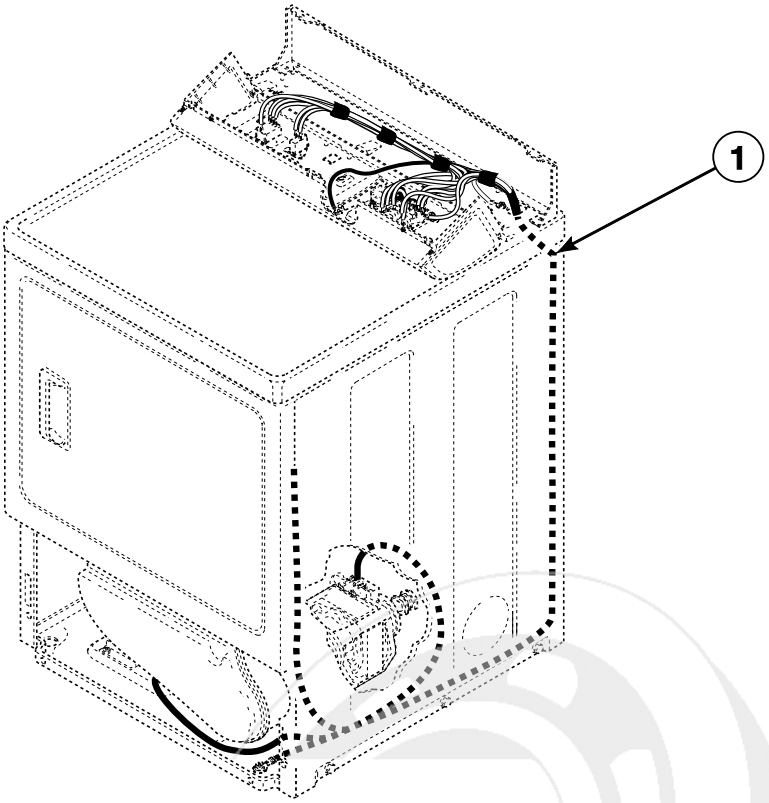


DRY2268P_506054

info@zipnasklade.ru
8(800)500-69-51


© Copyright, Alliance Laundry Systems LLC – DO NOT COPY or TRANSMIT

# Wire Harnesses and Wires - Rear Control Models Starting Serial No. 1207

| REF | PART NO. | DESCRIPTION | COMMENTS |
|---|---|---|---|
| | 45380 | 12 Gauge Wire | Orange; Order wire by the foot; Order terminals and connectors as required |
| | 45477 | 12 Gauge Wire | Green/yellow stripe; Order wire by the foot; Order terminals and connectors as required |
| | 45001 | 18 Gauge Wire | Black; Order wire by the foot; Order terminals and connectors as required |
| 1 | 513654 | Wire Harness Assembly | Models LES37A*F3300 and MDE3TRWS331TW06 through Serial No. 1303025314; Models ADE3TRWS431AW01, ADE3TRWS431NW22, FDE3TRGS301NW10, LDE3TRWS331TW05, LEG37A*F4350, LEH37A*F3300, LEK37A*F4350, LES17A*F3000, LES17A*F3007, LES17A*F3022, LES17A*F4500, LES17A*M4588, LES37A*F3000, LES37A*F3028, LES37A*F3327, LES37A*F4350, LES37A*F5412 and LEZ37A*F3000 |
| | 514078 | Harness Assembly | Models LES37A*F3300 and MDE3TRWS331TW06 starting Serial No. 1303025315 |
| | 513662 | Wire Harness Assembly | Models LEN27A*G3008, LEN27A*G3018, LEN37A*G3018, LES27A*G3018, LES37A*G3018, LEZ27A*G3018, LEZ37A*G3018 and LEZ37A*G5618 |
| | 513660 | Wire Harness Assembly | Models ZDE3LRGS171CW01 and ZDE4BRGS171CW01 through Serial No. 1303025314; Models AEZ28A*F1702, AEZ68A*F1702, CDE3LRGS171CW01, LET57A*F1700, LET67A*F1700, LET68A*F1700, LEZ57A*F1702 and LEZ67A*F1702 |
| | 513880 | Harness Assembly | Models ZDE3LRGS171CW01 and ZDE4BRGS171CW01 starting Serial No. 1303025315 |
| | 513661 | Wire Harness Assembly | Models LGN27A*M3008, LGN27A*M3013, LGN37A*M3013, LGS27A*M3013, LGS27A*M3080, LGS37A*F3028, LGS37A*M3013, LGS37A*M3080, LGZ27A*M3013 and LGZ37A*M3013 |
| | 513655 | Wire Harness Assembly | Models AGZ17A*F1102, LGS17A*K1180 and ZDG30RGS111CW01 |
| | 513653 | Wire Harness Assembly | Models FDG3TRGS301NW10, LGH37A*F5423, LGS37A*F3000, LGS37A*F3022, LGS37A*F3080, LGS37A*F5412, LGS37A*F5423 and LGZ37A*F3000 |
| | 513651 | Wire Harness Assembly | Models LDG3TRWS111TW05, LGH37A*F1182, LGZ27A*F1102, LGZ37A*F1102 and MDG3TRWS111TW06 |
| | 513652 | Wire Harness Assembly | Models AEZ17A*F1702, LED17A*F1700, LEZ27A*F1502, LEZ27A*F1702 and LEZ37A*F1702; Model ZDE30RGS171CW01 through Serial No. 1303025314 |
| | 514100 | Harness Assembly | Model ZDE30RGS171CW01 starting Serial No. 1303025315 |
| | 513664 | Wire Harness Assembly | Models FDE3TRGS401NW22, LEN27A*G4008, LEN27A*G4018, LEN27A*G99M3, LEN37A*G4018, LES27A*G4000, LES27A*G4018, LES37A*G4018, LEZ27A*G4018 and LEZ37A*G4018 |
| | 513666 | Wire Harness Assembly | Model LES28A*G4018 |
| | 513667 | Wire Harness Assembly | Models LGS38A*M3013, LGS38A*M3020 and LGS40A*M3020 |
| | 513665 | Wire Harness Assembly | Models AGZ28A*F1102, CDG3LRGS111CW01 and ZDG3LRGS111CW01 |
| | 513659 | Wire Harness Assembly | Models AGZ68A*F1102 and ZDG4BRGS111CW01 |
| | 513663 | Wire Harness Assembly | Models ADG3TRWS301AW01, LGK37A*F3060 and LGS37A*F3060 |

*** Add Letter To Designate Color. G - Gray L - Almond Q - Bisque W - White**

**NOTE: Individual wires are not available separately. Order complete harness, or order wire by the foot. When applying terminals to wires, it is recommended that the terminals be soldered to the wires.**

info@zipnasklade.ru
8(800)500-69-51


© Copyright, Alliance Laundry Systems LLC – DO NOT COPY or TRANSMIT

# Notes

info@zipnasklade.ru
8(800)500-69-51


© Copyright, Alliance Laundry Systems LLC – DO NOT COPY or TRANSMIT

# Parts Index

## A


Access Panel
510069LP ..... 27
514253 ..... 27

Access Panel and Guard Assembly
514252Q ..... 27
514252W ..... 27

Access Panel Assembly
514250G ..... 27
514250Q ..... 27
514250W ..... 27
514251 ..... 27

Access Panel Plate
510903 ..... 67

Adhesive
511637P ..... 35, 37, 43, 47

Adjustable Buzzer
504103 ..... 11, 15, 17
505447 ..... 11

Air Duct Assembly
510151LG ..... 35, 39
510151W ..... 35, 39

Anti-Seize Compound
27604P ..... 29, 31


## B


Badge
803013 ..... 17
803101 ..... 17

Block to Relay Harness
511112P ..... 53

Blower and Fan Kit
510717P ..... 29

Blower Fan Assembly
510139P ..... 31

Blower Housing
511969WP ..... 31

Blower Housing Seal
510238P ..... 31

Bolt
29651 ..... 13, 15, 17

Booster and Holding Coil
58804A ..... 57
59063A ..... 57

Bracket
510146 ..... 19

Bulkhead Assembly
505899WP ..... 37

Bumper Pad
56128 ..... 67

Burner Assembly
510149P ..... 57, 61

Buzzer
510211 ..... 11, 15, 17


## C


Cabinet Rear Panel
510005P ..... 67

Cabinet Side Panel
510001GP ..... 67
510001LP ..... 67
510001QP ..... 67
510001WP ..... 67
510002GP ..... 67
510002LP ..... 67
510002QP ..... 67
510002WP ..... 67
512951 ..... 67
512952 ..... 67

Caution Label
500253 ..... 25

Clean Lint Label
502804 ..... 25

Combustion Duct
510131 ..... 55
510132 ..... 55

Connector, 2 Circuit
58799 ..... 75

Connector, 3 Circuit
58800 ..... 73

Contactor
F330177P ..... 53

Contactor Bracket
511859 ..... 67

Control Cabinet
513701G ..... 17
513702G ..... 17
803141 ..... 17
803142 ..... 17

Control Cabinet Bottom
801777 ..... 13, 15, 17

Control Knob Assembly
803099P ..... 17
803119P ..... 9, 15

Control Panel Assembly
511421W ..... 13
512067W ..... 15
513161 ..... 17

Control Support Panel
503901 ..... 9

Conversion Kit
756P3 ..... 53

Cylinder Assembly
505929P ..... 41
510159LG ..... 41
510159WP ..... 41
510265LGP ..... 41
510265WP ..... 41
512940P ..... 41

Cylinder Baffle
510102LG ..... 41
510102W ..... 41

Cylinder Belt
511255P ..... 31


N/A items do not appear in index.

info@zipnasklade.ru
8(800)500-69-51


© Copyright, Alliance Laundry Systems LLC – DO NOT COPY or TRANSMIT

Cylinder Glide
510188 ..... 35, 37
Cylinder Glide Bracket
510145 ..... 35, 37
Cylinder Light Assembly
512109 ..... 37
Cylinder Light Lens
512106 ..... 37
Cylinder Roller
510708P ..... 43, 47
Cylinder Roller Bracket
510100 ..... 43, 47
Cylinder Seal Assembly
510207P ..... 35, 37, 43, 47

## D

Din Rail
M412693 ..... 53
Directional Exhaust Kit
528P3 ..... 67
Disconnect Power Warning Label
505281 ..... 13, 19
Domed Label
202128 ..... 13
800921 ..... 13
800922 ..... 13
800923 ..... 13
Door Catch Assembly
514113 ..... 25
Door Handle
803095 ..... 21
Door Handle Wedge
510129 ..... 23
Door Pull and Wedge Kit
510103LP ..... 23
510103QP ..... 23
510103WP ..... 23
511213P ..... 23
Door Strike
510181 ..... 21, 23
Door Strike Mount
510127 ..... 21, 23
Drum Light Lamp
503579 ..... 37
60954 ..... 37
Drum Light Lens
503623 ..... 37
Dryer Base
513901 ..... 67
Dryer Door
510013GP ..... 23
510013LP ..... 23
510013QP ..... 23
510013WP ..... 23
513156 ..... 21
Drying Rack
512082P ..... 41

## E

Elbow
513072 ..... 57
Elbow Shut-Off Valve
510205 ..... 57, 61
Electric Clearance Label
511005 ..... 67
Electrical Shock Label
502511 ..... 13
End Panel
504006P ..... 9
504007P ..... 9
504008L ..... 9
504008QP ..... 9
504008WP ..... 9
504009QP ..... 9
504009WP ..... 9
End Stop
70121001 ..... 53
Exhaust Duct
510137 ..... 67
Expansion Clip
70030501 ..... 13, 15, 17
Extractor Tool
128P4 ..... 77
190P4 ..... 77

## F

Fabric Selector Switch
513504 ..... 11
513505 ..... 11, 13, 15
513506 ..... 11, 17
Felt Pad
510189 ..... 35, 37
Female Piggyback Terminal
00361 ..... 75
Female Pin Terminal
00117 ..... 73
00128 ..... 73
00130 ..... 73
Female Spade Terminal
00114 ..... 75
00115 ..... 75
00121 ..... 75
00124 ..... 75
00156 ..... 75
00189 ..... 75
00222 ..... 73
00223 ..... 75
Female Tab Terminal
00344 ..... 75
Female Terminal
00188 ..... 77
00255 ..... 77
00256 ..... 77
Flexible Venting Kit
521P3 ..... 67
Front Bulkhead Assembly
510266P ..... 35
511033WP ..... 35
512476 ..... 37

info@zipnaskade.ru
8(800)500-69-51

N/A items do not appear in index.


© Copyright, Alliance Laundry Systems LLC – DO NOT COPY or TRANSMIT

Front Panel
510066GP ..... 25
510066LP ..... 25
510066QP ..... 25
510066WP ..... 25
512542 ..... 25

Front Panel Seal
511056 ..... 25

Fuse
502592 ..... 19
502593 ..... 19

Fuse Carrier
502811 ..... 19

Fuse Holder Bracket
502589 ..... 19

Fuse Holder Kit
502591P ..... 19

## G

Gas Clearance Label
511004 ..... 67

Gas Valve Assembly
502423P ..... 61
510506P ..... 57
59063P ..... 57

Gas Valve Mounting Bracket
510128 ..... 57, 61

Glide Kit
RB170003 ..... 35, 37

Graphic Overlay
511406 ..... 13
511656 ..... 13
511913 ..... 15
512751 ..... 15
513019 ..... 15
513245 ..... 15

Graphic Panel
503394 ..... 7
504020W ..... 7
504070W ..... 7
504072QP ..... 7
504072WP ..... 7
504107W ..... 7
504197Q ..... 7
504197W ..... 7
505157WP ..... 7
505850 ..... 7
505911 ..... 7
505912 ..... 7
505913 ..... 7
511437 ..... 7
511639 ..... 7
511882 ..... 7
511902W ..... 7
511914W ..... 7
512166W ..... 7
512167W ..... 7
512168W ..... 7
512370 ..... 7
512622W ..... 7
512752W ..... 7
513016W ..... 7
513017W ..... 7
513018W ..... 7
513244W ..... 7
513523W ..... 7
513764W ..... 7

Grounding Clip
00161 ..... 75

## H

Handle Cover
803094P ..... 21

Harness Assembly
513876 ..... 83
513880 ..... 87
514078 ..... 87
514100 ..... 87

Harness Strap
55881 ..... 73

Heat Duct Shroud
510101 ..... 55

Heater
511014P ..... 53

Heater Assembly
510324P ..... 49
510326P ..... 49
510327P ..... 49
510328P ..... 49
510329P ..... 49
510330P ..... 49
511503P ..... 49

Heater Duct and Screw Assembly
510025P ..... 49, 53, 55

Heater Kit
964P3 ..... 51
966P3 ..... 51

Heater Kit Assembly
61927 ..... 51
61929 ..... 51
61930 ..... 51
61931 ..... 51

Hinge
511036 ..... 13, 15, 17, 21, 23

Hinge Hole Plug
510186 ..... 25

Hold Down Kit
526P3 ..... 67

Hold-Down Clip
35358 ..... 19

Hood Back Panel
510099 ..... 19

Housing, 10 Position
500338 ..... 77

## I

Idler Lever
510133 ..... 31

Idler Lever and Wheel Assembly
510158 ..... 31

Idler Spring
510185 ..... 31

Idler Wheel and Bearing Assembly
510142P ..... 31

N/A items do not appear in index.

info@zipnasklade.ru
8(800)500-69-51


© Copyright, Alliance Laundry Systems LLC – DO NOT COPY or TRANSMIT

Igniter and Bracket Assembly
510184P ..... 57
Igniter and Sensor Assembly
502995P ..... 61
Igniter Control
502994P ..... 61
Ignition Control Bracket
502425 ..... 61
Insulated Female Spade Terminal
00359 ..... 75
00360 ..... 73
Insulated Female Terminal
00165 ..... 75

## J

Jumper Wire Assembly
511270 ..... 53

## K

Knob Assembly
36701L ..... 9, 13
36701Q ..... 9, 13, 15
36701W ..... 9, 13, 15
511439 ..... 9
803168P ..... 9

## L

Lead-In Cord
512019 ..... 69
513632 ..... 69
56222 ..... 69
59373 ..... 69
Lead-In Cord Assembly
503597 ..... 69
506106 ..... 69
510505P ..... 69
Lead-In Cord Kit
61605P ..... 69
Lead-In Pipe Assembly
510204 ..... 57, 61
Left Control Cabinet Side
800900LP ..... 13
800900QP ..... 13, 15
800900WP ..... 13, 15
Leveling Leg
510135 ..... 67
Light Housing Assembly
512108 ..... 37
Limit Thermostat
510700 ..... 49
510701 ..... 49, 53
510702 ..... 55
Liner Door Seal
510147P ..... 21, 23
Liner, Seal and Grill Assembly
510163WP ..... 23
513109P ..... 21, 23
Lint Filter
503980LG ..... 35, 39
503980W ..... 35, 39
Lint Filter Cover
510502LG ..... 35, 39
510502W ..... 35, 39
Lint Filter Label
502781 ..... 25
L.P. Conversion Kit
401P3 ..... 59, 61
599P3 ..... 59, 61
649P3 ..... 59
L.P. Orifice
503786 ..... 63
58755 ..... 63
60941 ..... 63

## M

Male Pin Terminal
00116 ..... 73
00127 ..... 73
00129 ..... 73
Male Tab Terminal
00139 ..... 75
Manual Reset Thermostat
M411941 ..... 33
Motor and Pulley Assembly
505843P ..... 29
505869P ..... 29
511629P ..... 29
Motor Hub Ring Kit
590P3 ..... 29
Motor Mount
510060 ..... 31
Motor Mount Clamp
510180 ..... 31
Motor Pulley
500011 ..... 29
500222 ..... 29

## N

Nut
29796 ..... 15
36020 ..... 17
44087201 ..... 13, 17
52566 ..... 31
56156 ..... 31, 43, 47
N.G. Conversion Kit
402P3 ..... 59, 61
650P3 ..... 59
N.G. Orifice
503778 ..... 65
503779 ..... 65
503780 ..... 65
503781 ..... 65
503782 ..... 65

info@zipnaskade.ru
8(800)500-69-51

N/A items do not appear in index.


© Copyright, Alliance Laundry Systems LLC – DO NOT COPY or TRANSMIT

## O


Outlet Cover
500820 ..... 49, 53, 55


## P


Panel
513093 ..... 17
513112 ..... 17
513443 ..... 17

Panel Locator
56079 ..... 25, 27, 67

Pinched Fingers Label
502506 ..... 35

Plug
23040 ..... 73
54522 ..... 73

Plug, 2 Circuit
56266 ..... 73
56448 ..... 73

Plug, 9 Circuit
23033 ..... 73

Pop Rivet
685847 ..... 17

Porcelain Touch-Up Paint
122P4P ..... 67
215P4P ..... 67
370P4P ..... 67

Power Cord Assembly
505945 ..... 69
506081 ..... 69


## R


Rear Bulkhead Assembly
505246 ..... 43, 47
510905WP ..... 43, 47
511082P ..... 43, 47

Rear Control Cabinet
801058 ..... 13, 15, 17

Receptacle Housing
90789 ..... 75

Receptacle, 12 Circuit
56855 ..... 73

Receptacle, 2 Circuit
56451 ..... 73

Receptacle, 3 Circuit
23039 ..... 73

Receptacle, 6 Circuit
26708 ..... 73

Receptacle, 9 Circuit
26163 ..... 73

Relay
502501 ..... 19

Relay to Heater Harness
511114P ..... 53

Resistor Assembly
511277 ..... 13, 15, 17

Retaining Ring
23748 ..... 31, 43, 47

Right Control Cabinet Side
800915L ..... 13
800915Q ..... 13, 15
800915W ..... 13, 15

Ring Terminal
00110 ..... 75
00111 ..... 75

Rocker Switch
38424L ..... 9
38424Q ..... 9, 15
38424W ..... 9, 15

Roller Kit
RB170002 ..... 43, 47

Rubber Foot
501855 ..... 67


## S


Screw
F430956 ..... 17
M405188 ..... 17
20530 ..... 71
23008 ..... 17
23222 ..... 49, 53, 57
31260 ..... 31
33562 ..... 27
39733 ..... 25, 27, 67
500227 ..... 37
500824 ..... 31
501086 ..... 9, 11, 15, 17, 19, 37
501285 ..... 35, 39, 45, 47
502535 ..... 33, 61
503661 ..... 47
503688 ..... 13, 17, 19, 25, 31, 35, 37, 43, 45, 47, 49, 53, 55, 57, 61, 67
505295 ..... 21, 23, 35, 37
512921 ..... 67
513071 ..... 71
51782 ..... 55, 57, 61
52864 ..... 35
56124 ..... 57, 61
61199 ..... 45
62588 ..... 41
70240301 ..... 13, 15, 17
800548 ..... 21
800930 ..... 13, 15

Screw Orifice
58719 ..... 65

Seal Kit
RB170001 ..... 35, 37, 43, 47

Secondary Coil
58804B ..... 57
59063B ..... 57

Security Cabinet Harness
511324P ..... 79, 81, 83

Security Cabinet Harness Assembly
511306P ..... 79
511323 ..... 79
511752P ..... 79
511767 ..... 79
511770 ..... 79, 81, 83
511771 ..... 79
513384 ..... 79

Selector Switch
803568 ..... 17


N/A items do not appear in index.

info@zipnaskladie.ru
8(800)500-6151


© Copyright, Alliance Laundry Systems LLC – DO NOT COPY or TRANSMIT

Sensor
510213 ..... 57
Shaft
56461P ..... 31, 43, 47
Spade Terminal
00245 ..... 75
Speed Clip
28835 ..... 25
Stainless Steel Top
511631P ..... 13
Strain Relief
38384 ..... 71, 75
502500 ..... 71
52113 ..... 71
60298 ..... 71
Strain Relief Adapter
502496 ..... 71
Switch
512973 ..... 25

## T

Terminal
00347 ..... 75
Terminal Block Assembly
505876 ..... 47
510190P ..... 45
Terminal Block Shield
505768 ..... 45, 47
510237 ..... 45
Terminal Block Support Bracket
505875 ..... 47
Terminal Extractor Tool
283P4 ..... 77
Thermal Fuse Assembly
511412 ..... 49, 53
Thermostat
504515 ..... 33
504519 ..... 33
504520 ..... 33
504521 ..... 33
510703 ..... 55
510707P ..... 33
511957 ..... 33
Timer
502964P ..... 11, 13, 15
502966P ..... 11
505794P ..... 11, 13
505795P ..... 11, 13, 17
505796P ..... 11, 13, 17
511149P ..... 11, 15, 17
511150P ..... 11, 15, 17
Timer and Harness Kit
505797P ..... 11, 13
Timer Knob Assembly
512117Q ..... 9, 13, 15
512117W ..... 9, 13, 15
512118 ..... 9
803098P ..... 17
803118P ..... 15
Top and Gusset Assembly
802247QP ..... 13, 15
802247WP ..... 13, 15
Top Cover
505808G ..... 9
505808Q ..... 9
505808W ..... 9
Top Hinge
510136 ..... 67
Top Kit
510032LP ..... 13
803144P ..... 17
Top Mounting Bracket
504228 ..... 13, 15, 17
Top Panel
510029G ..... 19
Top Panel Kit
510029LP ..... 19
510029WP ..... 19
Transformer Kit
511658P ..... 19, 67

## W

Warning Label
500314 ..... 35, 39
505809 ..... 25
512263 ..... 25
803260 ..... 67
Warning/Caution Label
500281 ..... 25
Washer
504082 ..... 43, 47
52549 ..... 31, 43, 47
Wire Assembly
510527 ..... 49
510528 ..... 49
510540 ..... 11
511148 ..... 9
513170P ..... 17
Wire Clip
504034 ..... 73
687500 ..... 73
Wire Harness Assembly
510402P ..... 85
510403 ..... 85
510420P ..... 85
510423 ..... 85
510425P ..... 85
510443P ..... 85
510444 ..... 85
510460 ..... 85
510478 ..... 85
511301P ..... 85
511303 ..... 19, 67
511304 ..... 79
511329 ..... 79
511330 ..... 79, 81
511335 ..... 85
511342 ..... 85
511754 ..... 79
511768P ..... 79, 81
511769P ..... 79
511773P ..... 79
511777 ..... 85
511779 ..... 79
511785 ..... 85
513451 ..... 79

N/A items do not appear in index.


© Copyright, Alliance Laundry Systems LLC – DO NOT COPY or TRANSMIT


info@zipnaskle.ru
8(800)500-6051

513452 ..... 79
513651 ..... 87
513652 ..... 87
513653 ..... 87
513654 ..... 87
513655 ..... 87
513659 ..... 87
513660 ..... 87
513661 ..... 87
513662 ..... 87
513663 ..... 87
513664 ..... 87
513665 ..... 87
513666 ..... 87
513667 ..... 87
513948 ..... 83

Wire Tie
38663 ..... 73

Wire, 12 Gauge
45380 ..... 79, 81, 83, 85, 87
45477 ..... 85, 87

Wire, 18 Gauge
45001 ..... 79, 81, 83, 85, 87

info@zipnasklade.ru
8(800)500-69-51

N/A items do not appear in index.


© Copyright, Alliance Laundry Systems LLC – DO NOT COPY or TRANSMIT

# Notes

info@zipnasklade.ru
8(800)500-69-51


© Copyright, Alliance Laundry Systems LLC – DO NOT COPY or TRANSMIT