Spareparts Catalogue
Reservdelskatalog

W4600H

info@zipnasklade.ru
8(800)500-69-51

Electrolux

Dok.no
Version 38.2017

info@zipnasklade.ru
8(800)500-69-51

W4600H

Illustration	Page	Table of content
102364	6	Panels
102392	12	Frame
102395	18	Outer and inner drum
102397	22	Bearing house with bearings
102398	24	Electric cabinet, rear
500170	30	Electric cabinet, rear
500227	36	Electric cabinet, rear
500223	42	Printed circuit board
500224	44	Printed circuit board
102368	46	Electric cabinet, front
500214	50	Electric cabinet, front
102400	52	Motor
102369	54	Door
102370	58	Door lock
102402	60	Water connections
102377	64	Water alternatives Lindström
102595	66	Drain valve
101978	68	Lubrication
102371	70	Out of balance switch
102404	72	Sound insulation
101452	74	Dispensing components
102407	76	Steam components
102409	78	Suspension unit
102410	80	Level tube and test tap
102357	82	Drain and hoses
102213	86	Drain valve and hoses, water recovery
102413	88	Water recovery system
102374	90	Tilt, forward
102375	92	Tilt, forward and forward/backward
102376	94	Weighing device
500327	96	Weighing device
102107	98	CMIS
500503	100	CMIS
100798	102	Inlet valve 3/4", 2-way
100797	104	Inlet valve 3/4", 3-way

info@zipnasklade.ru
8(800)500-69-51

info@zipnasklade.ru
8(800)500-69-51

W4600H

Table of content	Innehållsförteckning	Page/Sida
Panels	Plåtar	6
Frame	Stativ	12
Outer and inner drum	Ytter- och innertrumma	18
Bearing house with bearings	Lagerhus med lagring	22
Electric cabinet, rear	Elskåp,bakre	24
Electric cabinet, rear	Elskåp,bakre	30
Electric cabinet, rear	Elskåp,bakre	36
Printed circuit board	Kretskort	42
Printed circuit board	Kretskort	44
Electric cabinet, front	Elskåp,front	46
Electric cabinet, front	Elskåp,front	50
Motor	Motor	52
Door	Lucka	54
Door lock	Lucklås	58
Water connections	Vattenanslutningar	60
Water alternatives Lindström	Vattenalt. Lindström	64
Drain valve	Avloppsventil	66
Lubrication	Oljesmörjning	68
Out of balance switch	Obalansbrytare	70
Sound insulation	Ljudisolering	72
Dispensing components	Doseringsutrustning	74
Steam components	Ångdetaljer	76
Suspension unit	Fjäderenhet	78
Level tube and test tap	Nivårör och provtagningskran	80
Drain and hoses	Avlopp och slangar	82
Drain valve and hoses, water recovery	Avloppsventil och slangar,återvinning	86
Water recovery system	Vattenåtervinning	88
Tilt, forward	Tippning framåt	90
Tilt, forward and forward/backward	Tippning,framåt och framåt/bakåt	92
Weighing device	Vågenhet	94
Weighing device	Vågenhet	96
CMIS	CMIS	98
CMIS	CMIS	100
Inlet valve 3/4", 2-way	Tilloppsventil 3/4",2-vägs	102
Inlet valve 3/4", 3-way	Tilloppsventil 3/4",3-vägs	104

info@zipnasklade.ru
8(800)500-69-51

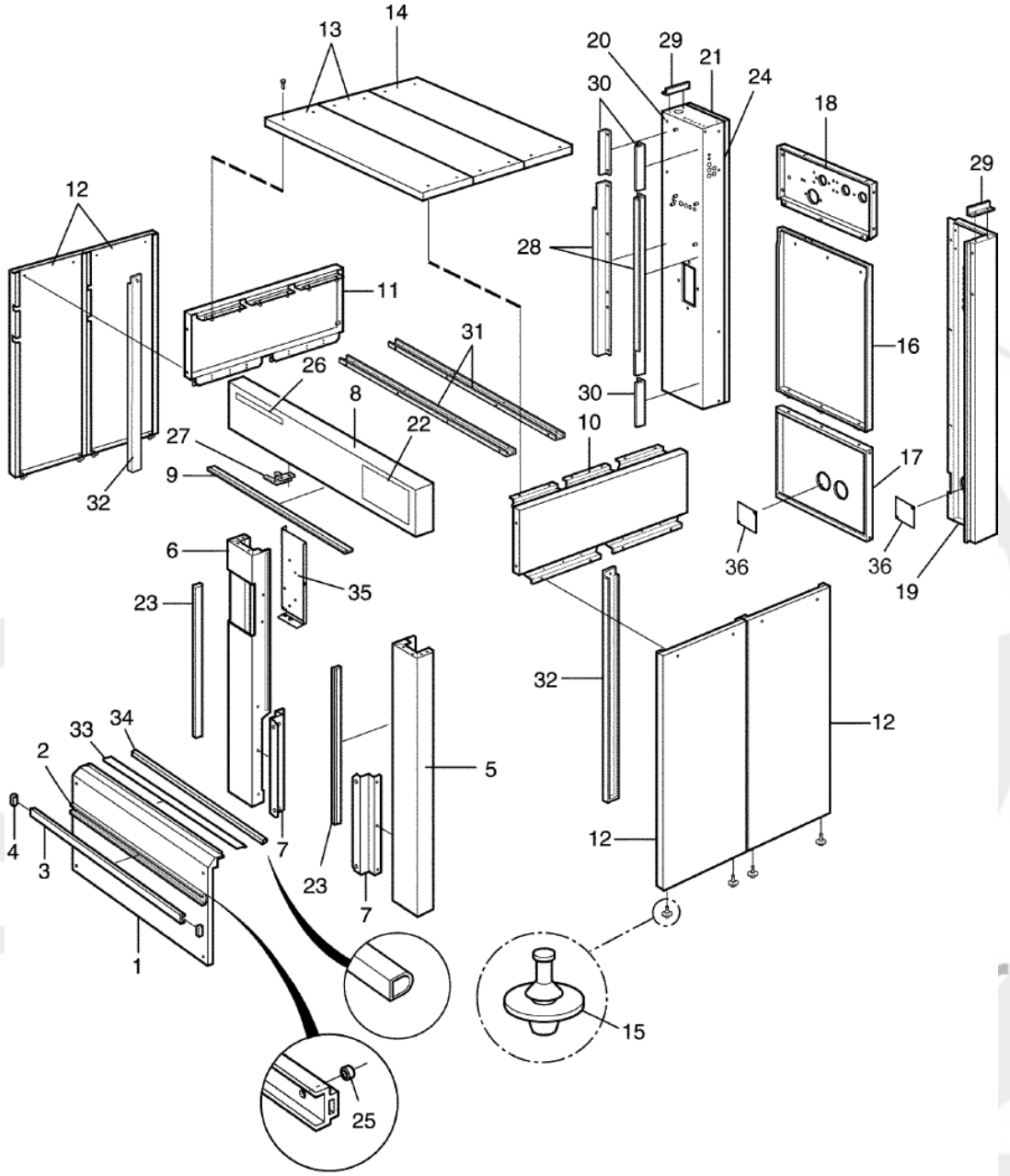

Issue	Month	Year
05	**11**	**11**

102364

W4600H
Panels
Plåtar

Illustration Illustration	Issue Utgåva	Month Månad	
102364/1	**7**	**7**	**2016**

Pos	Qty	Part.no	Description	Beskrivning	Notes
1	1	438587502	Front panel	Frontplåt	Lower
2	1	471556000	Profile	Profil	
3	1	471556400	Safety strip	Skyddslist	
4	2	471920493	Sleeve	Hylsa	
5	1	438585810	Pillar	Stolpe	Right
6	1	438585910	Pillar	Stolpe	Left -980/001287
6	1	438621401	Pillar	Stolpe	Left 980/001288-
7	2	438588301	Angle bracket	Fästvinkel	
8	1	438590403	Front panel	Frontplåt	Light grey
8	1	438590402	Front panel	Frontplåt	Stainless
9	1	432216319	Rubber strip	Gummilist	
10	1	438587107	Side panel	Sidoplåt	Light grey
10	1	438587102	Side panel	Sidoplåt	Stainless
10	1	438587108	Side panel	Sidoplåt	Light grey With detergent container
10	1	438587104	Side panel	Sidoplåt	Stainless With detergent container
10	1	438587105	Side panel	Sidoplåt	White Left
11	1	438586104	Side panel	Sidoplåt	Light grey
11	1	438586102	Side panel	Sidoplåt	Stainless
11	1	438586103	Side panel	Sidoplåt	White Left
12	4	438586307	Side panel	Sidoplåt	Light grey
12	4	438586302	Side panel	Sidoplåt	Stainless
12	1	438586308	Side panel	Sidoplåt	Light grey Level tube
12	1	438586304	Side panel	Sidoplåt	Stainless Level tube
12	1	438586305	Side panel	Sidoplåt	White
12	1	438586306	Side panel	Sidoplåt	White
13	2	438586404	Top panel	Topplock	Light grey
13	2	438586402	Top panel	Topplock	Stainless
13	2	438586403	Top panel	Topplock	White
14	1	438587004	Top panel	Topplock	Light grey
14	1	438587002	Top panel	Topplock	Stainless

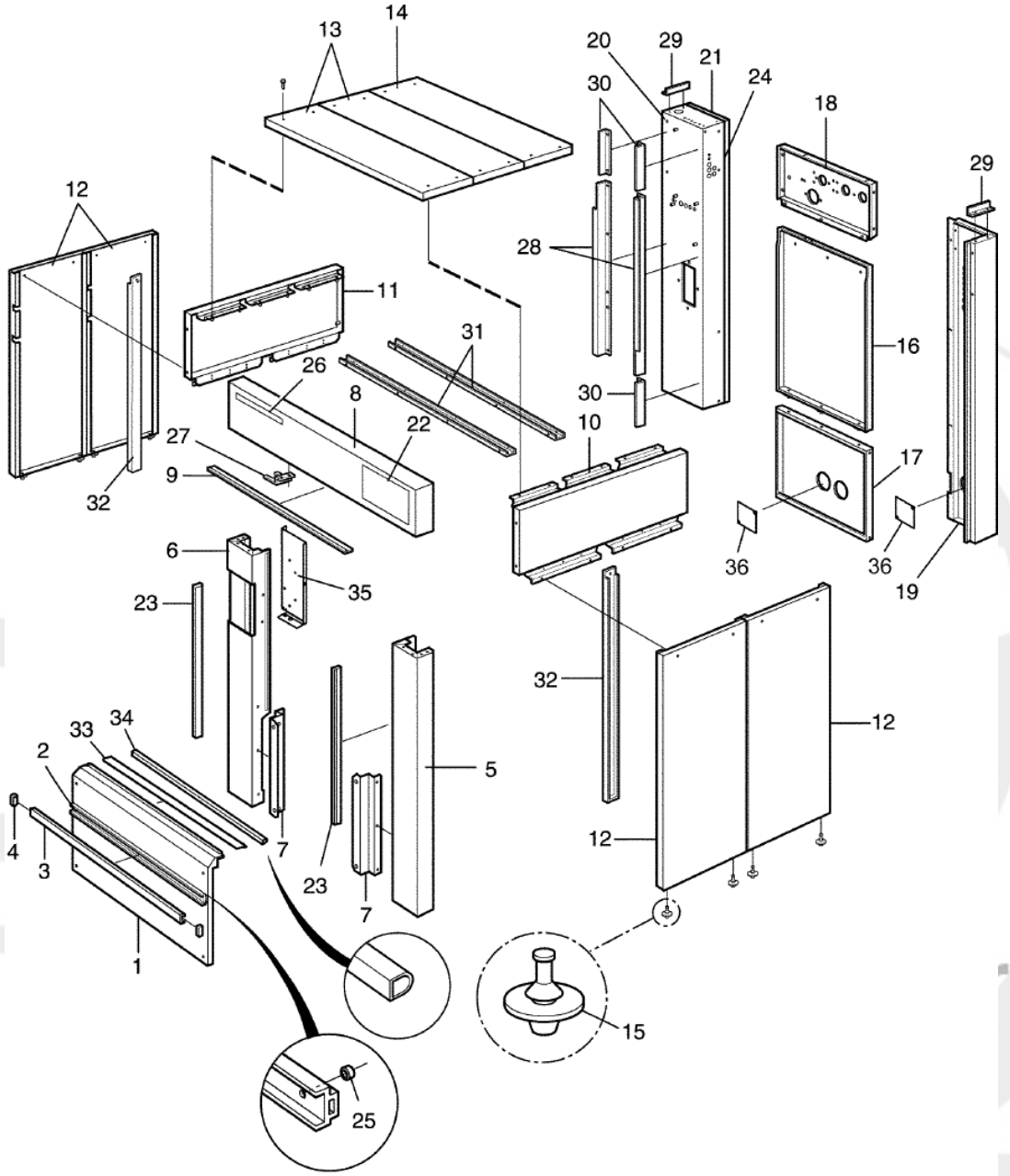

Issue	Month	Year
05	**11**	**11**

102364

W4600H
Panels
Plåtar

Illustration	Issue	Month	
Illustration	Utgåva	Månad	
102364/1	**7**	**7**	**2016**

Pos	Qty	Part.no	Description	Beskrivning	Notes
14	1	438587003	Top panel	Topplock	White
15	11	432011702	Rubber guide	Gummistyrning	
16	1	438587403	Rear panel	Bakstycke	Light grey
16	1	438587402	Rear panel	Bakstycke	White
16	1	438587404	Rear panel	Bakstycke	Unpainted
17	1	438587303	Cover plate	Täckplåt	
17	1	438587302	Cover plate	Täckplåt	White
17	1	438587304	Cover plate	Täckplåt	Unpainted
18	1	438587203	Cover plate	Täckplåt	Light grey
18	1	438587202	Cover plate	Täckplåt	White
18	1	438587204	Cover plate	Täckplåt	Unpainted
19	1	438586603	Pillar	Stolpe	
19	1	438586602	Pillar	Stolpe	White
20	1	438586803	Electric cabinet	Elskåp	-980/002101
20	1	438629601	Electric cabinet	Elskåp	980/002102-
20	1	438586802	Electric cabinet	Elskåp	White -980/002101
21	1	438587803	Door	Dörr	-980/002101
21	1	438587802	Door	Dörr	White -980/002101
21	1	432510006	Door	Dörr	Light grey Lindström Without hinges
22	1	438491203	Cover plate	Täckplåt	Stainless
22	1	438491206	Cover plate	Täckplåt	Light grey
23	2	432216317	Rubber strip	Gummilist	
24	Rq	432036601	Rubber strip	Gummilist	Per 1m
25	3	432044301	Spacer	Distans	
26	1	432261611	Type plate	Typskylt	W4600H
27	1	432037902	Lock guard	Låsbygel	
28	2	438588201	Angle	Vinkel	
29	2	438588202	Angle	Vinkel	
30	3	438588203	Angle	Vinkel	-980/002101
30	3	438588204	Angle	Vinkel	980/002102-

8(800)500-69-51

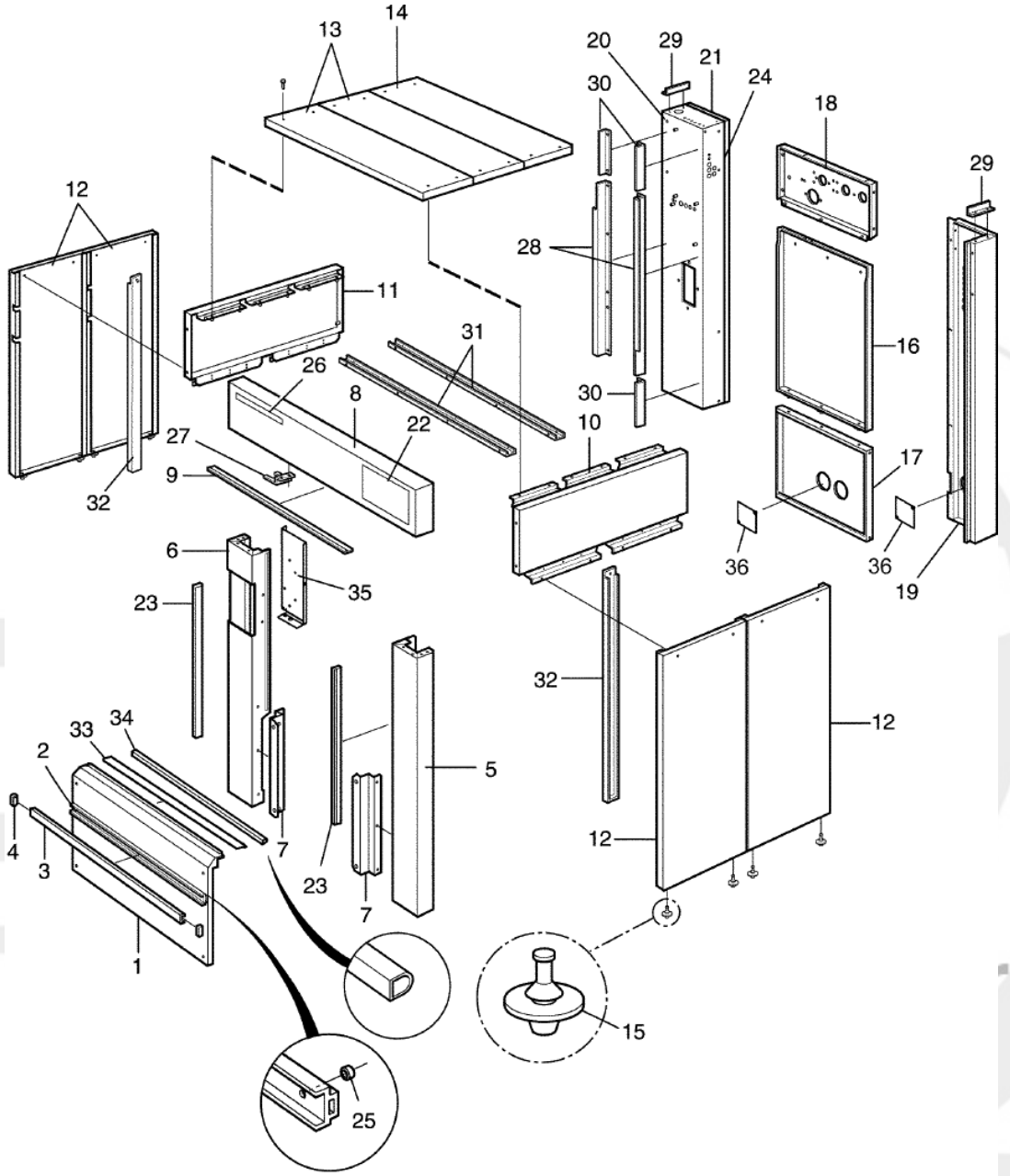

Issue	Month	Year
05	**11**	**11**

102364

Pos	Qty	Part.no	Description	Beskrivning	Notes
31	2	438586501	U-section	U-profil	
32	2	438586201	U-section	U-profil	
33	1	438594302	Profile	Profil	
34	1	432216317	Rubber strip	Gummilist	
35	1	438621501	Cover plate	Täckplåt	980/001288-
36	2	438624001	Cover plate	Täckplåt	

info@zipnasklade.ru
8(800)500-69-51

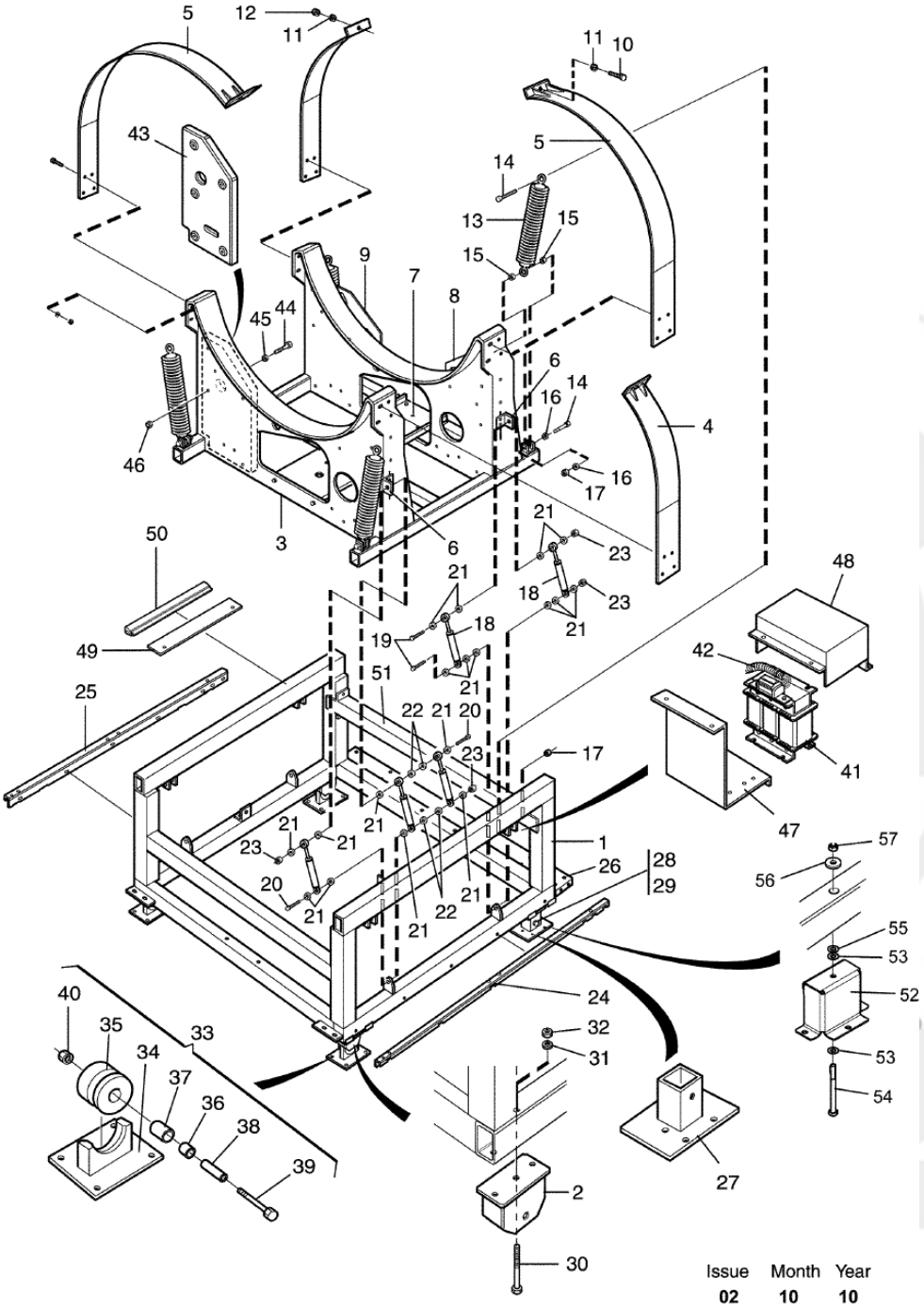

Issue	Month	Year
02	10	10

102392

W4600H
Frame
Stativ

Illustration Illustration	Issue Utgåva	Month Månad	
102392/1	**4**	**10**	**2010**

Pos	Qty	Part.no	Description	Beskrivning	Notes
1	1	438584001	Outer frame	Ytterstativ	
2	4	432000801	Foot	Fot	Upper part, fixed/ tilting
2	4	432000803	Foot	Fot	Upper part, weighing device
3	1	438583001	Inner frame	Innerstativ	
4	2	432514201	• *Tension strap*	• *Spännband*	Short
5	2	432514401	• *Tension strap*	• *Spännband*	
6	4	432002102	• *Bracket*	• *Fäste*	
7	1	438583601	• *Motor mounting plate*	• *Motorbrygga*	
8	1	438589501	• *Bracket*	• *Vridskydd*	Left
9	1	438589502	• *Bracket*	• *Vridskydd*	Right
10	2	725263251	• *Screw*	• *Skruv*	M16X60
11	4	734118601	• *Washer*	• *Bricka*	BRB 17X30
12	2	732212401	• *Locking nut*	• *Låsmutter*	M16
13	4	*	Suspension unit	Fjäderenhet	Complete
14	8	725254451	Screw	Skruv	M12X60
15	16	472625602	Spacer	Distans	
16	16	734117801	Washer	Bricka	BRB 13X24
17	8	732212201	Locking nut	Låsmutter	M12
18	10	471825910	Shock absorber	Stötdämpare	
19	4	725246651	Screw	Skruv	M8X75
20	4	725247551	Screw	Skruv	M8X120
21	32	471850214	Washer	Bricka	8,4X20
22	8	471901934	Washer	Bricka	TBRSB 8,4X26
23	8	732211801	Locking nut	Låsmutter	M8
24	1	438588001	Angular support	Stödvinkel	Right
25	1	438588002	Angular support	Stödvinkel	Left
26	1	438587901	Shelf	Hylla	
27	4	472681701	Foot	Fot	-980/001139
28	4	725263651	Screw	Skruv	M16X80
29	4	732212401	Locking nut	Låsmutter	M16

8(800)500-69-51

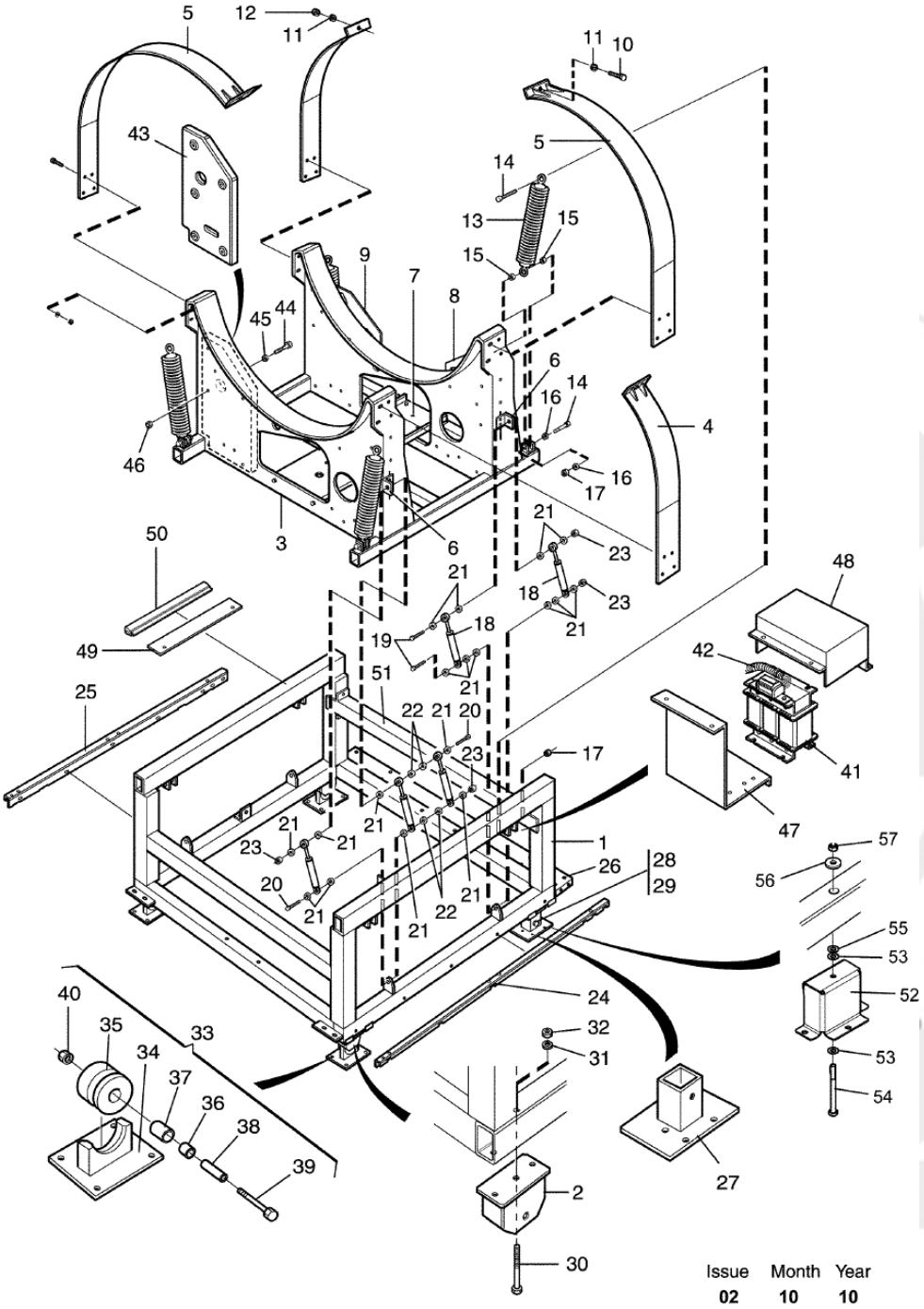

Issue	Month	Year
02	10	10

102392

Pos	Qty	Part.no	Description	Beskrivning	Notes
30	4	725255851	Screw	Skruv	M12X130
31	4	471907359	Washer	Bricka	TBRSB 13X36
32	4	732212201	Locking nut	Låsmutter	M12
33	4	472681803	Foot	Fot	Complete
34	4	472681201	• *Bracket*	• *Fäste*	
35	4	472681001	• *Wheel*	• *Hjul*	
36	4	471857603	• *Bushing*	• *Bussning*	20/28X20
37	4	471857604	• *Bushing*	• *Bussning*	20/28X30
38	4	472681401	• *Bushing*	• *Bussning*	
39	4	725263651	• *Screw*	• *Skruv*	M16X80
40	4	732212401	• *Locking nut*	• *Låsmutter*	M16
41	1	438954901	Transformer	Transformator	Primary 200-240V
41	1	438955301	Transformer	Transformator	Primary 440-480V
42	1	438730266	Cable set	Ledningssats	
43	2	438589101	Counterweight	Motvikt	
44	10	725250351	Screw	Skruv	10X60
45	10	734117301	Washer	Bricka	BRB 10,5X21
46	10	732212001	Locking nut	Låsmutter	M10
47	1	432037402	Bracket	Konsol	
48	1	432039702	Cover	Kåpa	
51	1	438584801	Beam	Balk	
52	4	438621001	Foot	Fot	980/001140-
53	8	734117801	Washer	Bricka	BRB 13X24 980/001140-
54	4	725255851	Screw	Skruv	M12X130 980/001140-
55	4	734118601	Washer	Bricka	BRB 17X30 980/001140-
56	4	471907359	Washer	Bricka	TBRSB 13X36 980/001140-

info@zipnasklade.ru
8(800)500-69-51

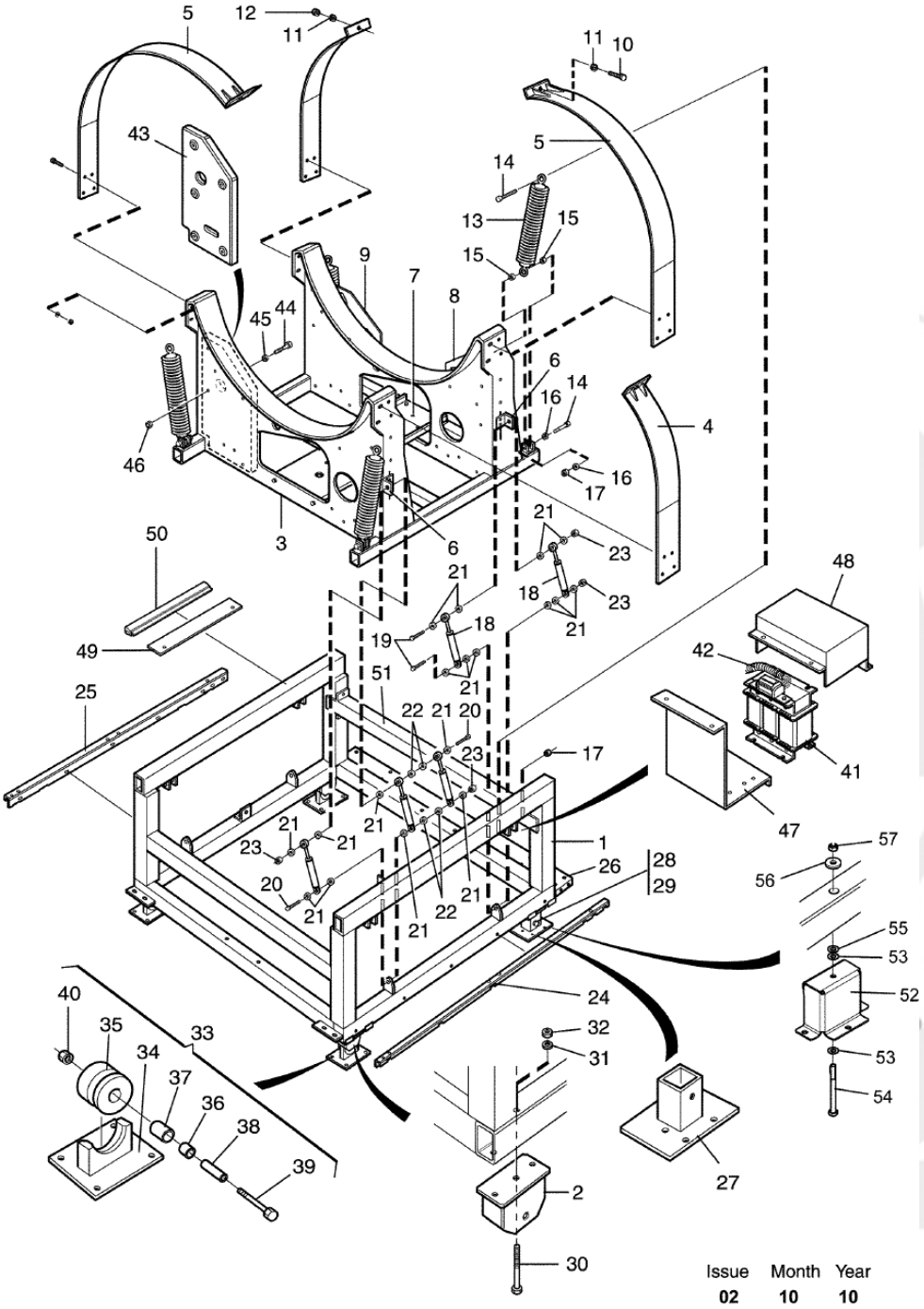

Issue	Month	Year
02	10	10

Pos	Qty	Part.no	Description	Beskrivning	Notes
57	4	732212201	Locking nut	Låsmutter	M12 980/001140-

info@zipnasklade.ru
8(800)500-69-51

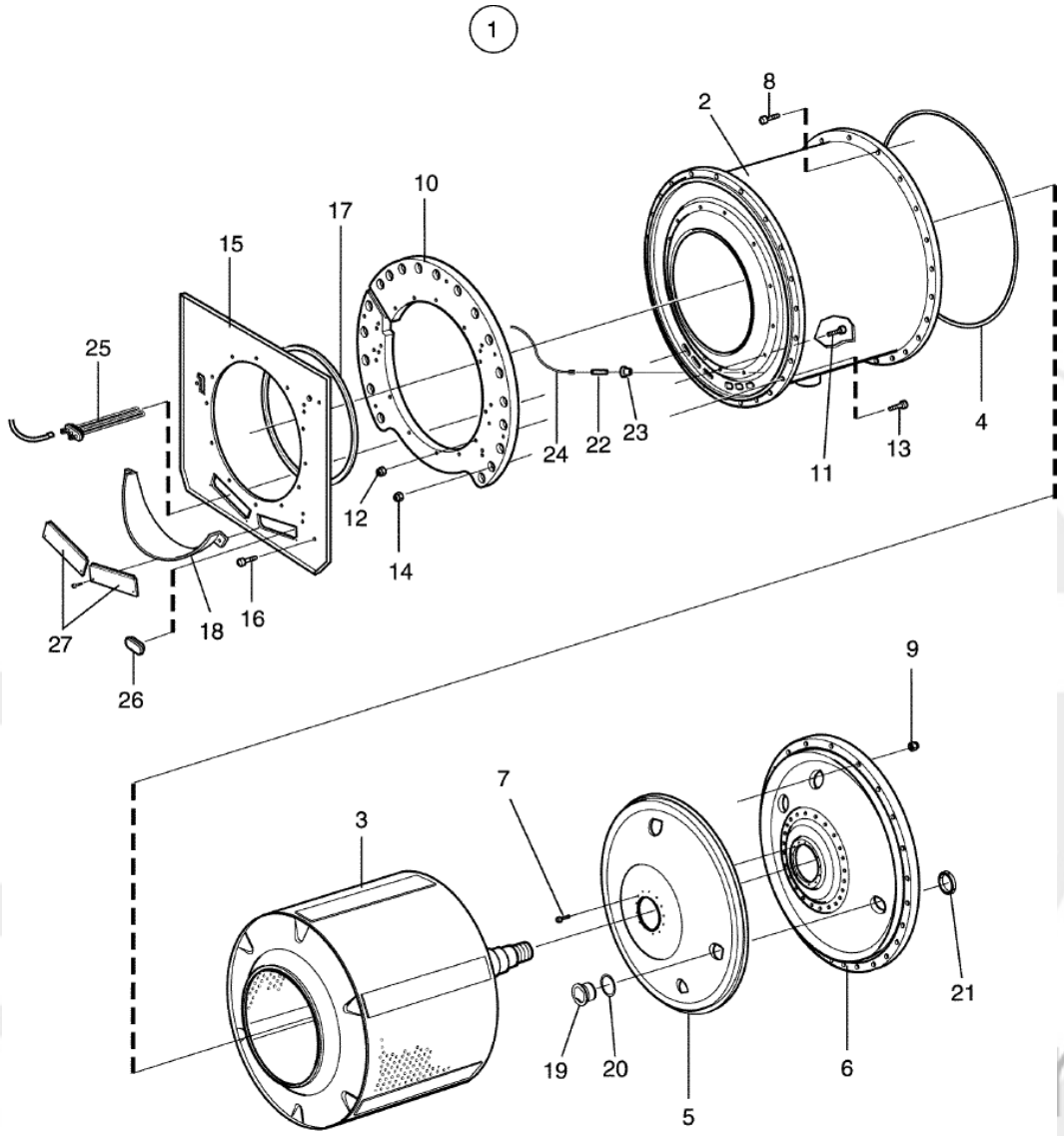

102395_02

W4600H
Outer and inner drum
Ytter- och innertrumma

Illustration Illustration	Issue Utgåva	Month Månad	
102395/1	**6**	**2**	**2017**

Pos	Qty	Part.no	Description	Beskrivning	Notes
1	1	438580601	Drum	Trumma	Complete
2	1	438582701	• *Outer drum*	• *Yttertrumma*	
3	1	438580501	• *Inner drum*	• *Innertrumma*	
4	1	471400960	• *Gasket*	• *Tätningslist*	
5	1	438589802	• *Lining*	• *Klädselplåt*	
6	1	432511202	• *Back plate*	• *Bakgavel*	
7	12	471832008	• *Screw*	• *Skruv*	M8X12
8	18	725250181	• *Screw*	• *Skruv*	M10X50
8	6	725250381	• *Screw*	• *Skruv*	M10x60
9	24	471840905	• *Locking nut*	• *Låsmutter*	M10
10	1	438581701	• *End piece*	• *Gavel*	Front
11	6	471832012	• *Screw*	• *Skruv*	M8X30
12	6	732211801	• *Locking nut*	• *Låsmutter*	M8
13	18	725250151	• *Screw*	• *Skruv*	M10X50
14	18	732212001	• *Locking nut*	• *Låsmutter*	M10
15	1	438589301	• *Trim panel*	• *Dekorplåt*	
16	7	725245142	• *Screw*	• *Skruv*	M8X20
17	Rq	471900481	• *Rubber strip*	• *Gummilist*	
18	1	432003001	• *Unloading plate*	• *Urlastningsplåt*	
19	1	438045801	• *Nipple*	• *Nippel*	
20	1	471244012	• *Gasket*	• *Packning*	
21	1	438045901	• *Nut*	• *Mutter*	
22	1	472991322	Sensor	Givare	Complete
23	1	471819201	• *Bushing*	• *Bussning*	
24	1	438730042	Cable set	Ledningssats	Sensor, temp. -980/001287
24	1	438730283	Cable set	Ledningssats	Sensor, temp. 980/001288-
25	6	471981143	Heating element	Element	6,4kW 230V
25	6	471981144	Heating element	Element	6.4kW 240V
25	6	471981145	Heating element	Element	6.4kW 254V
25	6	471981146	Heating element	Element	6.4kW 277V

info@zipnaskiade.ru
8(800)500-69-51

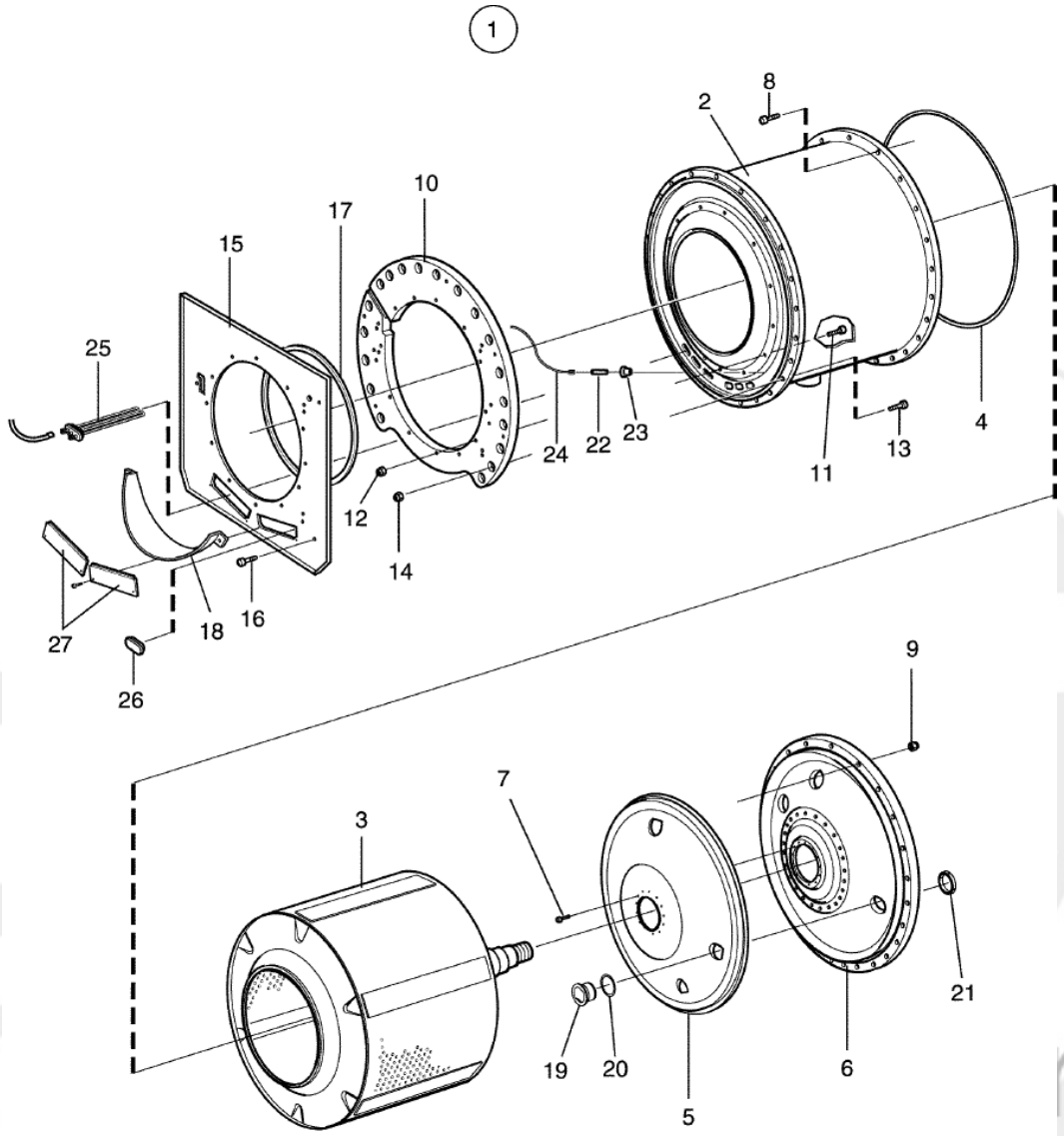

102395_02

Pos	Qty	Part.no	Description	Beskrivning	Notes
25	6	471981139	Heating element	Element	9kW 230V
25	6	471981140	Heating element	Element	9kW 240V
25	6	471981141	Heating element	Element	9kW 254V
25	6	471981142	Heating element	Element	9kW 277V
26	6	471449402	Blind flange	Blindfläns	
27	2	432003101	Cover plug	Täckpropp	

info@zipnasklade.ru
8(800)500-69-51

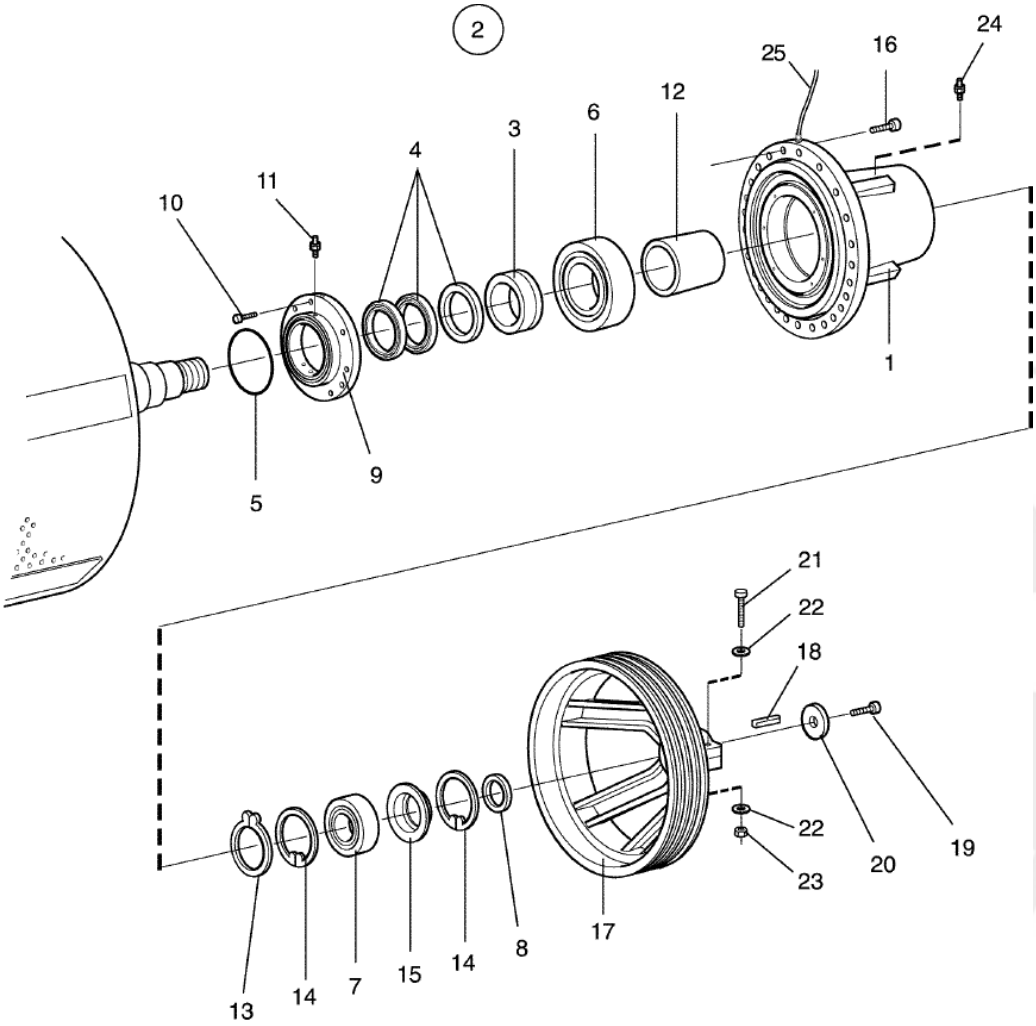

Issue	Month	Year
02	**06**	**11**

102397

W4600H
Bearing house with bearings
Lagerhus med lagring

Illustration Illustration	Issue Utgåva	Month Månad	
102397/1	**4**	**10**	**2014**

Pos	Qty	Part.no	Description	Beskrivning	Notes
1	1	438581301	Bearing housing	Lagerhus	
2	1	438454301	Bearing set	Lagersats	
3	1	*	• *Bushing*	• *Bussning*	
4	3	*	• *Radial seal*	• *Radialtätning*	
5	1	*	• *O-ring*	• *O-ring*	
6	1	*	• *Roller bearing*	• *Rullager*	
7	1	*	• *Roller bearing*	• *Rullager*	
8	1	*	• *Seal*	• *Tätning*	
9	1	438582501	Bearing cover	Lagerlock	
10	6	725245951	Screw	Skruv	M8X40
11	1	471869036	Nipple	Nippel	
12	1	438582201	Spacer	Distans	
13	1	735317141	C-clamp	Spårring	
14	2	735318110	C-clamp	Spårring	
15	1	*			Not used
16	20	471832804	Screw	Skruv	M16X70
17	1	438581801	Pulley	Remskiva	
18	1	735963001	Wedge	Plattkil	18x11x63
19	1	725262451	Screw	Skruv	M16X30
20	1	471241719	Washer	Bricka	
21					Not used
22					Not used
23					Not used
24	1	738881001	Nipple	Nippel	
25	1	471862500	Hose	Slang	

info@zipnasklade.ru
8(800)500-69-51

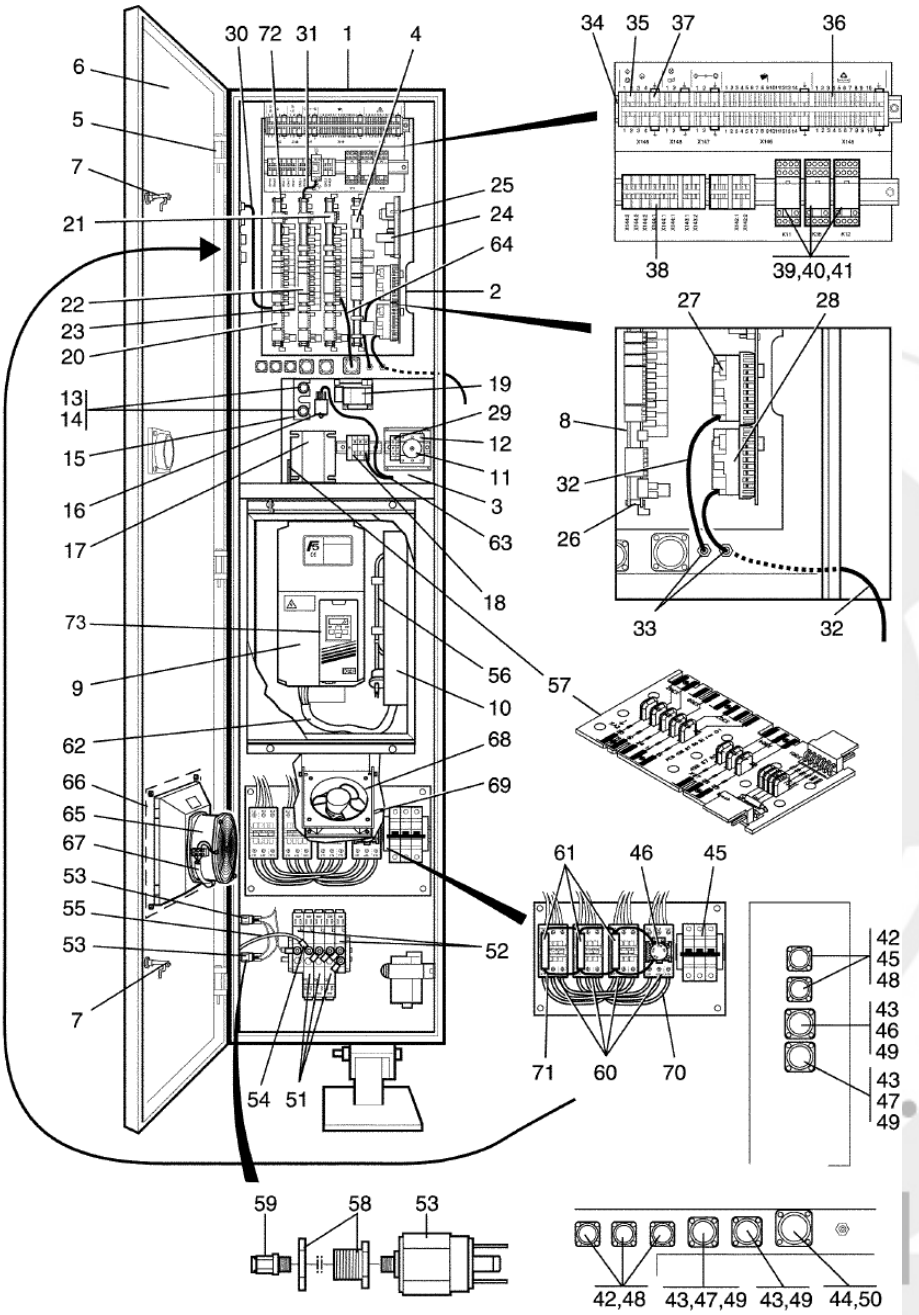

Issue	Month	Year
02	11	10

102398

W4600H
Electric cabinet, rear
Elskåp,bakre
-980/000579

Illustration	Issue	Month	
Illustration	Utgåva	Månad	
102398/1	**9**	**6**	**2017**

Pos	Qty	Part.no	Description	Beskrivning	Notes
1	1	438586801	Electric cabinet	Elskåp	
2	1	432013701	Component panel	Komponentplåt	
3	1	432013801	Component panel	Komponentplåt	
4	1	438877901	Printed circuit board	Kretskort	
5	2	471783801	Hinged joint	Gångled	
6	1	438587801	Door	Dörr	With fan
7	3	471783901	Lock	Lås	
8	5	432014201	Bracket	Fäste	
9	1	471978601	Motor control	Motorstyrning	
10	1	438950202	Filter	Filter	230V
11	1	471967862	Main switch	Huvudbrytare	HW,DS 200-240V
11	1	471967861	Main switch	Huvudbrytare	HW,DS 380-480V
11	1	471967895	Knob	Vred	
11	1	438967901	Main switch	Huvudbrytare	EL. 3-pole, 160A
11	1	471967833	Main switch	Huvudbrytare	EL. 3-pole, 100A
11	1	471967893	Knob	Vred	
12	1	432036701	Bracket	Konsol	
13	2	471875011	Fuse	Säkring	1,25A
14	2	471875651	Insert	Insats	5X20MM
15	1	471407401	Fuse holder	Säkringshållare	
16	1	471952910	Mains filter	Nätfilter	208-240V
17	1	471955021	Transformer	Transformator	200-415V, not 346V
17	1	471955022	Transformer	Transformator	346,440,480V
18	1	471876204	Terminal connection	Kopplingsplint	
19	1	472991225	Kit	Kit	PSU
20	1	471899511	Printed circuit board	Kretskort	A11 I/O-card
21	1	471899513	Printed circuit board	Kretskort	A13
22	1	471899512	Printed circuit board	Kretskort	A12 I/O-card
23	18	471795802	Spacer element	Distansstycke	
24	1	438955501	Printed circuit board	Kretskort	B31 Door lock

8(800)500-69-51

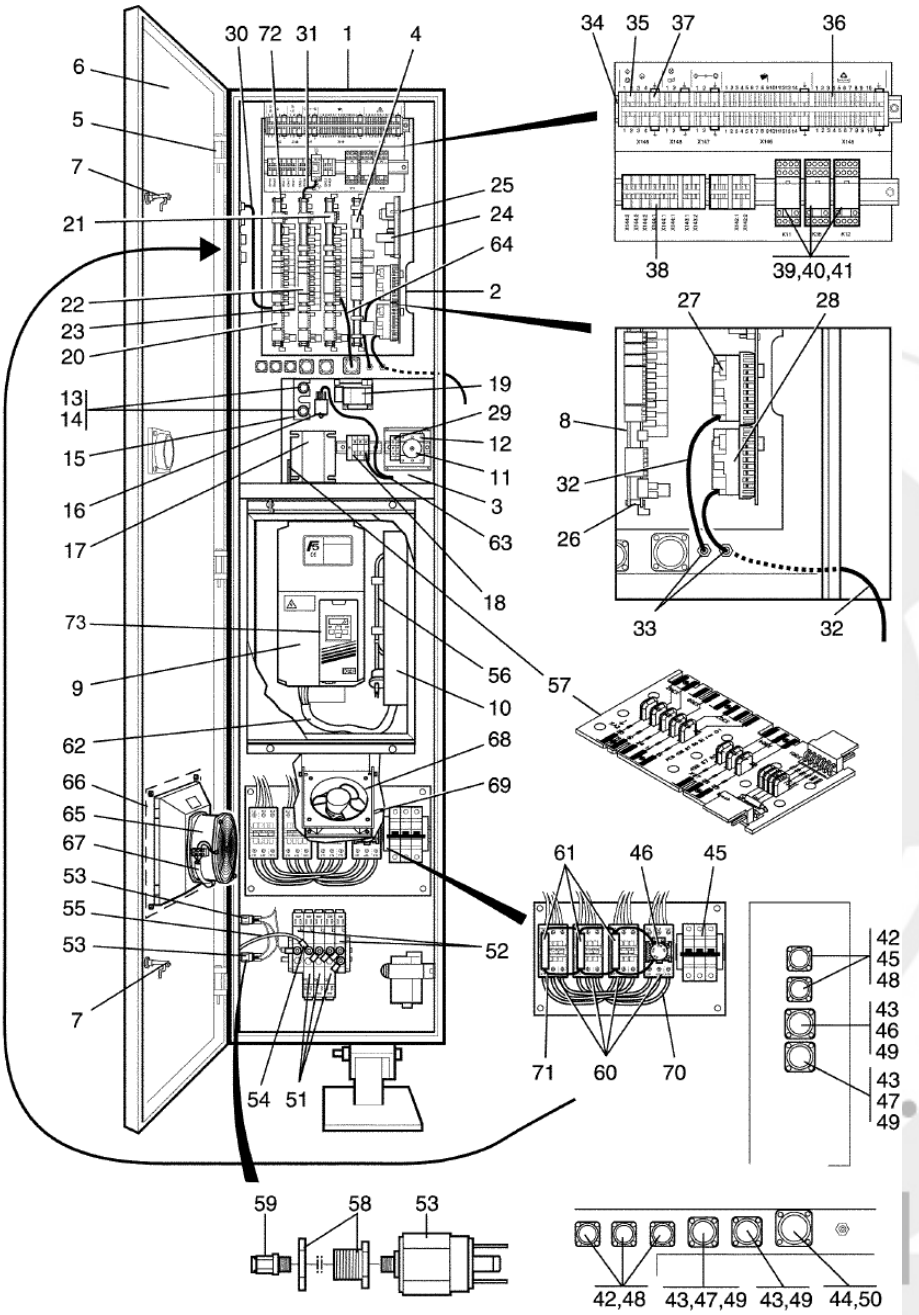

Issue	Month	Year
02	11	10

102398

Pos	Qty	Part.no	Description	Beskrivning	Notes
25	4	471795801	Support	Stöd	
26	12	438029901	Spacer	Distans	
27	1	471885915	Level control	Nivåkontroll	B1
28	1	471885901	Level control	Nivåkontroll	B2
29	2	471876703	Ground terminal	Jordplint	200-240V SL35
30	1	438730242	Cable set	Ledningssats	DS
31	1	438730247	Cable set	Ledningssats	EL/DS
32	2	471244040	Hose	Slang	L=1400
33	2	471816400	Grommet	Genomföring	D7
34	10	471878111	Block	Plint	
35	10	471878101	Block	Plint	Grey
36	28	471878102	Block	Plint	Orange
37	5	471878103	Block	Plint	Yellow/Green
38	5	471878104	Block	Plint	Orange
39	3	471964905	Relay	Relä	
40	3	471964904	Socket	Sockel	
41	3	471964912	Clamp	Bygel	
42	5	438815203	Gasket	Packning	4-pole AMP
43	4	438815202	Gasket	Packning	14-pole AMP
44	1	438815201	Gasket	Packning	37-pole AMP
45	1	471877813	Circuit breaker	Automatsäkring	El. 25A
46	1	438963401	Timer	Timer	EL
47	2	432017501	Cover washer	Täckbricka	14-pole
48	5		Connector	Kontaktdon	4-pole AMP Connector
49	6		Connector	Kontaktdon	14-pole AMP Connector
50	1		Connector	Kontaktdon	37-pole AMP Connector
51	Rq	471828721	Valve	Ventil	
51	Rq	471828790	• *Coil*	• *Spole*	
52	Rq	471828701	Valve	Ventil	
52	Rq	471828790	• *Coil*	• *Spole*	

8(800)500-69-51

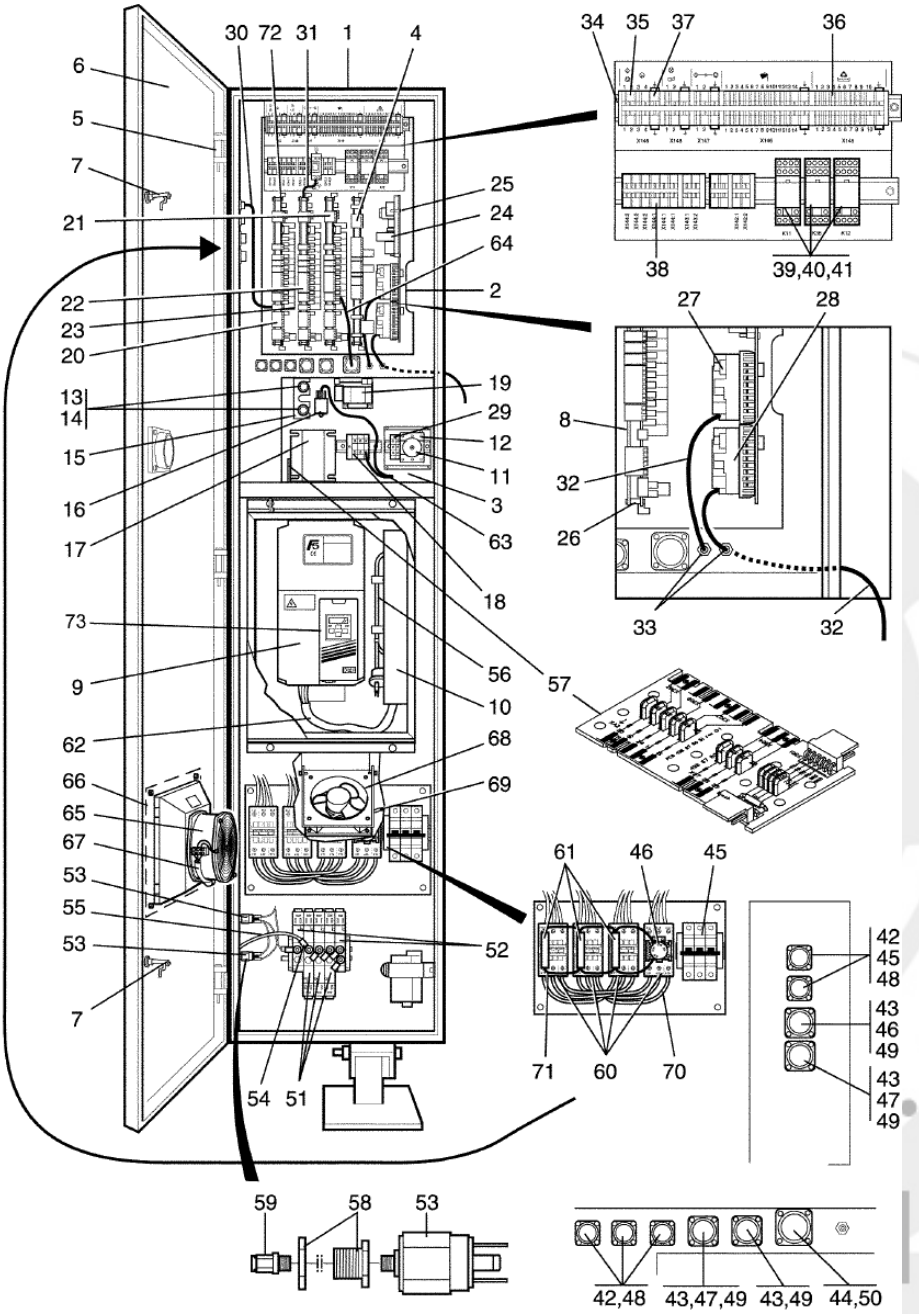

Issue	Month	Year
02	11	10

102398

W4600H
Electric cabinet, rear
Elskåp,bakre
-980/000579

Illustration Illustration	Issue Utgåva	Month Månad	
102398/1	**9**	**6**	**2017**

Pos	Qty	Part.no	Description	Beskrivning	Notes
53	Rq	471886201	Pressure sensor	Tryckvakt	
54	Rq	471869022	Insert	Passdel	
55	Rq	438810202	Hose	Slang	Per 1 m L=2700
56	1	471983704	Heating element	Element	1kW 240V
57	1	438878001	Printed circuit board	Kretskort	
58	2	471869091	Grommet	Genomföring	
59	2	471869032	Joint piece	Skarvstycke	Ø6,1/ 8''
60	4	438963732	Contactor	Kontaktor	EL 50Hz
60	4	438963832	Contactor	Kontaktor	EL 220-240V 50Hz
60	4	438963733	Contactor	Kontaktor	24 MIN. M3 60Hz
60	4	438963833	Contactor	Kontaktor	EL 200-240V 60Hz
61	3	767510292	Auxiliary contact	Hjälpkontakt	HN01 Red
62	1	*			Not used
63	1	438730066	Cable set	Ledningssats	
64	1	438730201	Cable set	Ledningssats	
65	1	438960110	Fan	Fläkt	
66	1	438960120	Filter	Filter	
67	1	438960190	Cable set	Ledningssats	
68	1	471967608	Fan	Fläkt	
69	1	438730238	Cable set	Ledningssats	
70	1	438730244	Cable set	Ledningssats	EL 380-480V
70	1	438730245	Cable set	Ledningssats	EL 200-240V
71	1	438730243	Cable set	Ledningssats	EL
72	1	438308270	Clamp	Bygel	HW/DS
73	1	471879902	Program unit	Programenhet	

info@zipnasklade.ru
8(800)500-69-51

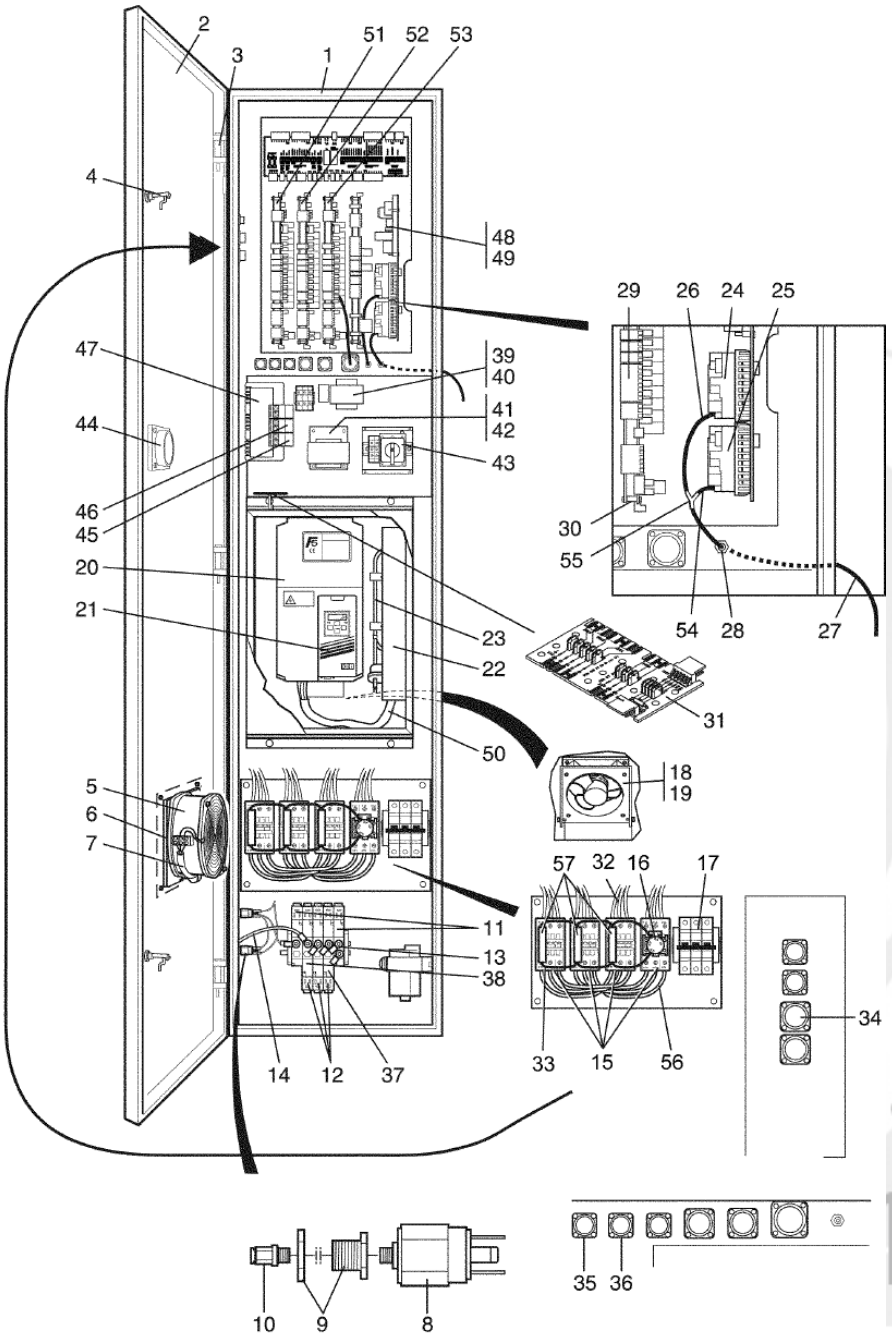

Issue	Month	Year
01	**12**	**10**

500170

W4600H
Electric cabinet, rear
Elskåp,bakre
980/000580-001287

Illustration Illustration	Issue Utgåva	Month Månad	
500170/0	**6**	**9**	**2017**

Pos	Qty	Part.no	Description	Beskrivning	Notes
1	1	438586803	Electric cabinet	Elskåp	
2	1	438587803	Door	Dörr	
2	1	432510006	Door	Dörr	Lindström Without hinges
3	2	471783801	Hinged joint	Gångled	
4	3	471783901	Lock	Lås	
5	1	438960110	Fan	Fläkt	
6	1	438960120	Filter	Filter	
7	1	438960190	Cable set	Ledningssats	
8	Rq	471886201	Pressure sensor	Tryckvakt	
9	2	471869091	Grommet	Genomföring	
10	2	471869032	Joint piece	Skarvstycke	Ø6,1/ 8''
11	Rq	471828701	Valve	Ventil	
11	Rq	471828790	• *Coil*	• *Spole*	
12	Rq	471828721	Valve	Ventil	
12	Rq	471828790	• *Coil*	• *Spole*	
13	Rq	471869022	Insert	Passdel	
14	Rq	438810202	Hose	Slang	6/4 L=2700
15	2	438963732	Contactor	Kontaktor	50Hz
15	2	438963733	Contactor	Kontaktor	60Hz
15	2	438963692	Contactor	Kontaktor	208-240V 50Hz
15	2	438963693	Contactor	Kontaktor	208-240V 60Hz
15	4	438963832	Contactor	Kontaktor	220-240V 50Hz
15	4	438963833	Contactor	Kontaktor	200-240V 60Hz
16	1	438963402	Timer	Tidur	
17	1	471877813	Circuit breaker	Automatsäkring	25A
18	1	471967608	Fan	Fläkt	
19	1	438730238	Cable set	Ledningssats	
20	1	471978601	Motor control	Motorstyrning	
21	1	471879902	Program unit	Programenhet	
22	1	438950202	Filter	Filter	230V

8(800)500-69-51

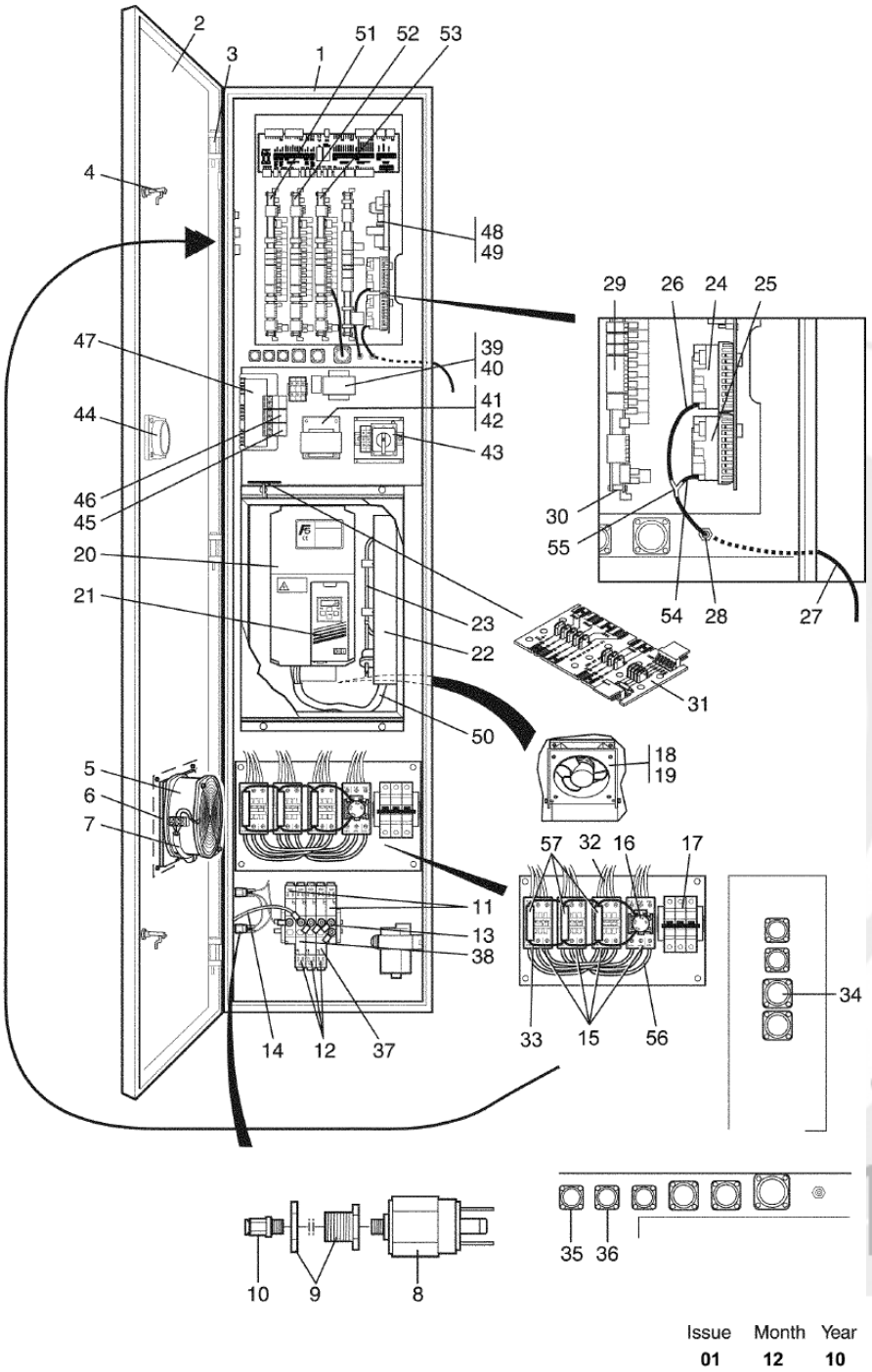

Issue	Month	Year
01	12	10

500170

W4600H
Electric cabinet, rear
Elskåp,bakre
980/000580-001287

Illustration	Issue	Month	
Illustration	Utgåva	Månad	
500170/0	**6**	**9**	**2017**

Pos	Qty	Part.no	Description	Beskrivning	Notes
23	1	471983704	Heating element	Element	1kW 240V
24	1	471885915	Level control	Nivåkontroll	B5
25	1	471885901	Level control	Nivåkontroll	B2
26	1	471226403	Hose	Slang	L=150
27	1	471244040	Hose	Slang	B1 L=1400
28	2	471816400	Grommet	Genomföring	D7
29	5	432014201	Bracket	Fäste	
30	12	438029901	Spacer	Distans	
31	1	438878002	Printed circuit board	Kretskort	
32	1	438730274	Cable set	Ledningssats	208-240V Heating
32	1	438730276	Cable set	Ledningssats	380-415V Heating
33	1	438730262	Cable set	Ledningssats	36kW
33	1	438730243	Cable set	Ledningssats	54kW
34	1	*	Cable set	Ledningssats	See illustration: 500223
35	1	*	Cable set	Ledningssats	See illustration: 500223
36	1	*	Cable set	Ledningssats	See illustration: 500223
37	1	*	Cable set	Ledningssats	See illustration: 500223
38	1	*	Cable set	Ledningssats	See illustration: 500223
39	1	472991225	Kit	Kit	PSU
40	1	*	Cable set	Ledningssats	See illustration: 500223
41	1	438957001	Transformer	Transformator	
42	1	*	Cable set	Ledningssats	See illustration: 500223
43	1	438967801	Main switch	Huvudbrytare	3-pole, 32A
43	1	438967804	Main switch	Huvudbrytare	3-pole, 80A
43	1	438967811	Main switch	Huvudbrytare	4-pole, 32A
43	1	471967833	Main switch	Huvudbrytare	3-pole, 100A
43	1	438967901	Main switch	Huvudbrytare	3-pole, 160A
43	1	471967893	Knob	Vred	
44	1	471967895	Knob	Vred	
45	1	438730264	Cable set	Ledningssats	

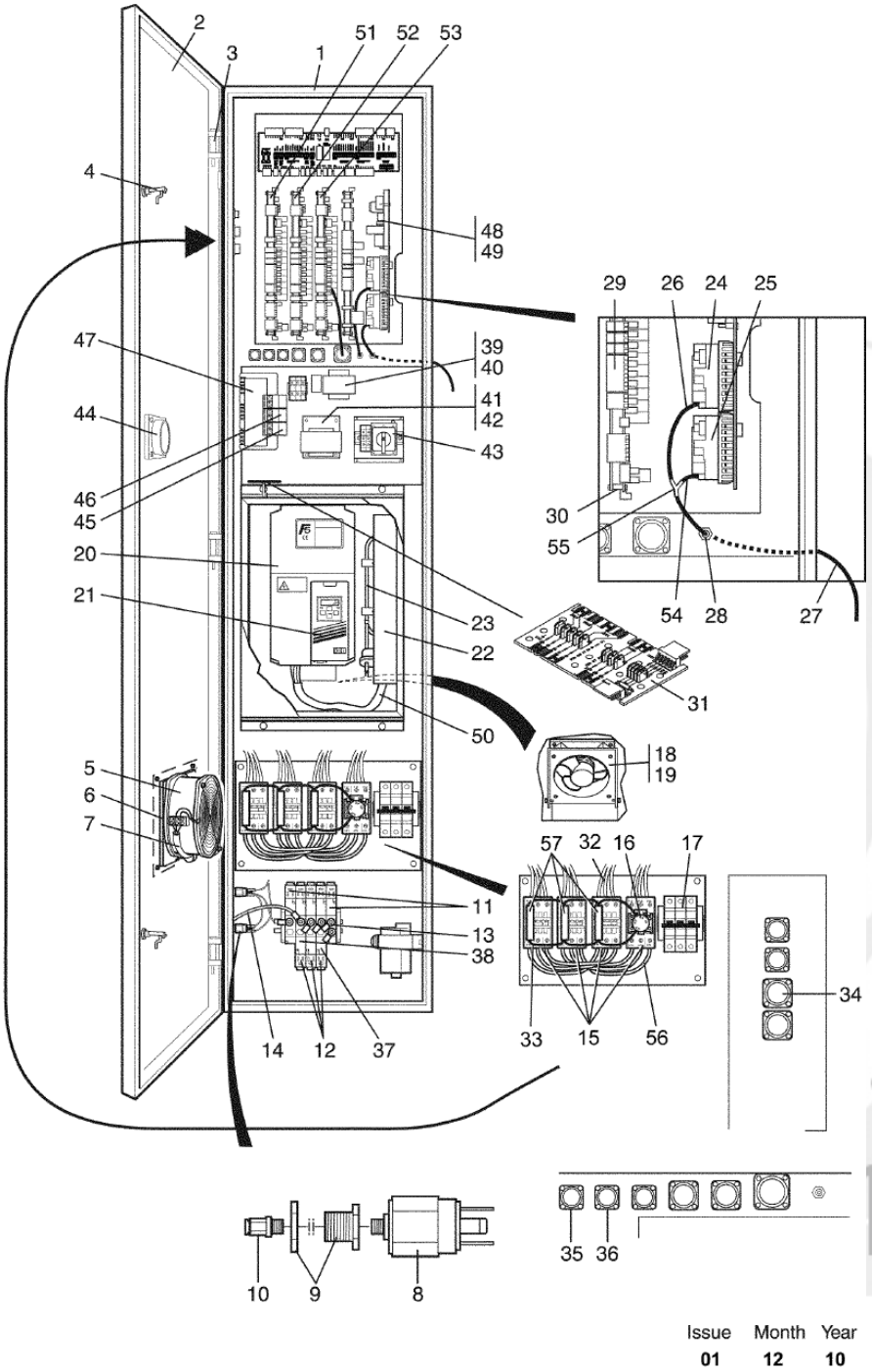

Issue	Month	Year
01	12	10

500170

W4600H
Electric cabinet, rear
Elskåp,bakre
980/000580-001287

Illustration	Issue	Month	
Illustration	Utgåva	Månad	
500170/0	**6**	**9**	**2017**

Pos	Qty	Part.no	Description	Beskrivning	Notes
46	1	438730263	Cable set	Ledningssats	
47	1	438950603	Transformer	Transformator	
48	1	438955501	Printed circuit board	Kretskort	B31 Door lock
49	4	471795802	Spacer element	Distansstycke	
50	1	*			Not used
51	1	*	Printed circuit board	Kretskort	A11 I/O-card See illustration: 500223
52	1	*	Printed circuit board	Kretskort	A12 I/O-card See illustration: 500223
53	1	*	Printed circuit board	Kretskort	A13 See illustration: 500223
54	1	471244995	Hose	Slang	L=100
55	1	471226569	T-pipe	T-rör	
56	6	438730277	Cable set	Ledningssats	54kW 400V
56	6	438730278	Cable set	Ledningssats	54kW 230V
57	4	767510292	Auxiliary contact	Hjälpkontakt	HN01 Red

info@zipnasklade.ru
8(800)500-69-51

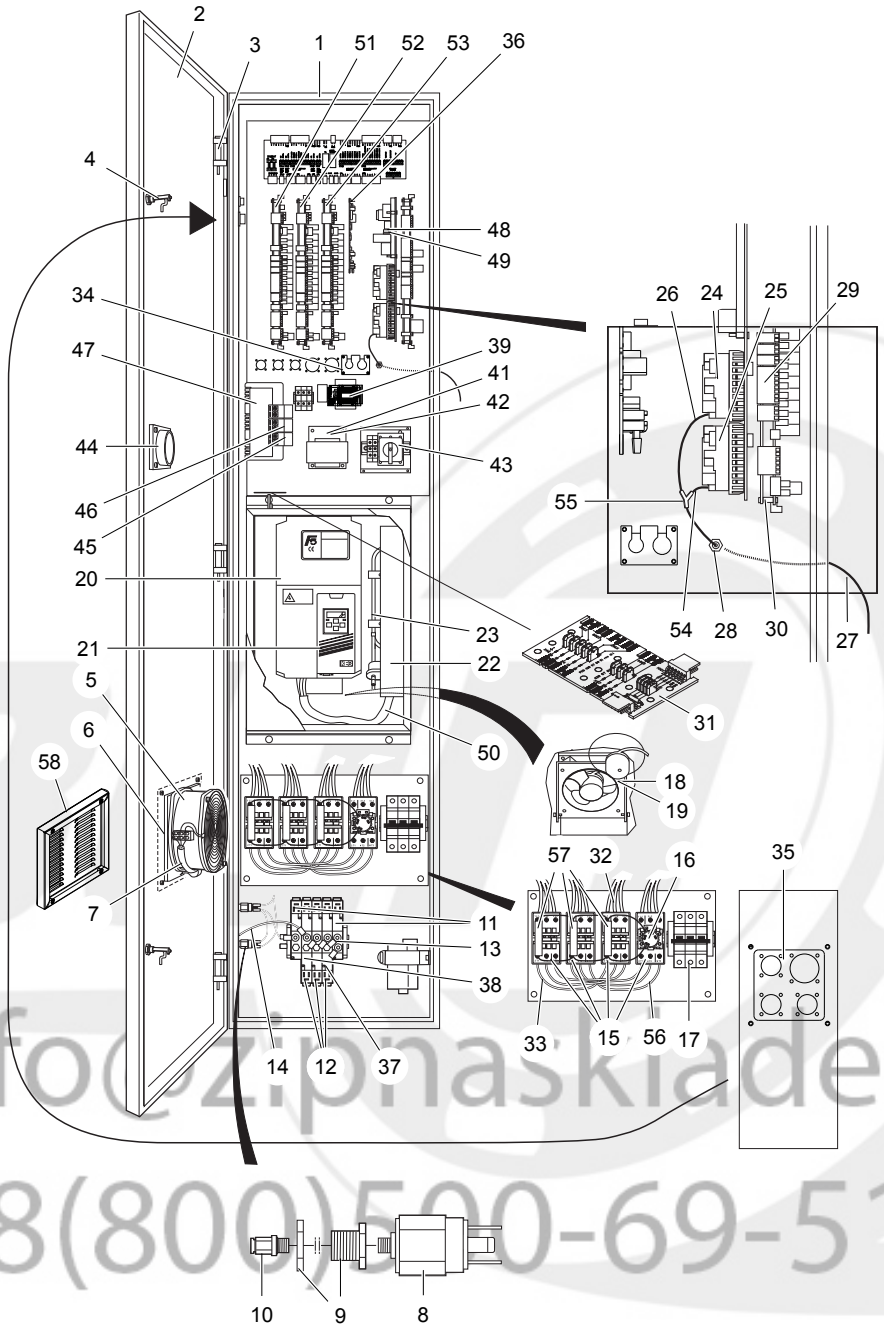

info@zipnaskiade.ru
8(800)500-69-51

Issue Month Year
03 05 16

500227

W4600H
Electric cabinet, rear
Elskåp,bakre
980/001288-

Illustration Illustration	Issue Utgåva	Month Månad	
500227/2	**8**	**9**	**2017**

Pos	Qty	Part.no	Description	Beskrivning	Notes
1	1	438622401	Electric cabinet	Elskåp	
2	1	438587803	Door	Dörr	
2	1	432510006	Door	Dörr	Lindström Without hinges
3	2	471783801	Hinged joint	Gångled	
4	3	471783901	Lock	Lås	
5	1	438960110	Fan	Fläkt	
6	1	438960120	Filter	Filter	
7	1	438960190	Cable set	Ledningssats	
8	Rq	471886201	Pressure sensor	Tryckvakt	
9	2	471869091	Grommet	Genomföring	
10	2	471869032	Joint piece	Skarvstycke	Ø6,1/ 8''
11	Rq	471828701	Valve	Ventil	
11	Rq	471828702	Valve	Ventil	For US market
11	Rq	471828790	• *Coil*	• *Spole*	
12	Rq	471828721	Valve	Ventil	
12	Rq	471828722	Valve	Ventil	For US market
12	Rq	471828790	• *Coil*	• *Spole*	
13	Rq	471869022	Insert	Passdel	
14	Rq	438810202	Hose	Slang	6/4 L=2700
15	2	438963732	Contactor	Kontaktor	50Hz
15	2	438963733	Contactor	Kontaktor	60Hz
15	2	438963692	Contactor	Kontaktor	208-240V 50Hz
15	2	438963693	Contactor	Kontaktor	208-240V 60Hz
15	4	438963832	Contactor	Kontaktor	220-240V 50Hz
15	4	438963833	Contactor	Kontaktor	200-240V 60Hz
16	1	438963402	Timer	Tidur	
17	1	471877813	Circuit breaker	Automatsäkring	25A
18	1	471967608	Fan	Fläkt	
19	1	438730238	Cable set	Ledningssats	
20	1	471978601	Motor control	Motorstyrning	

8(800)500-69-51

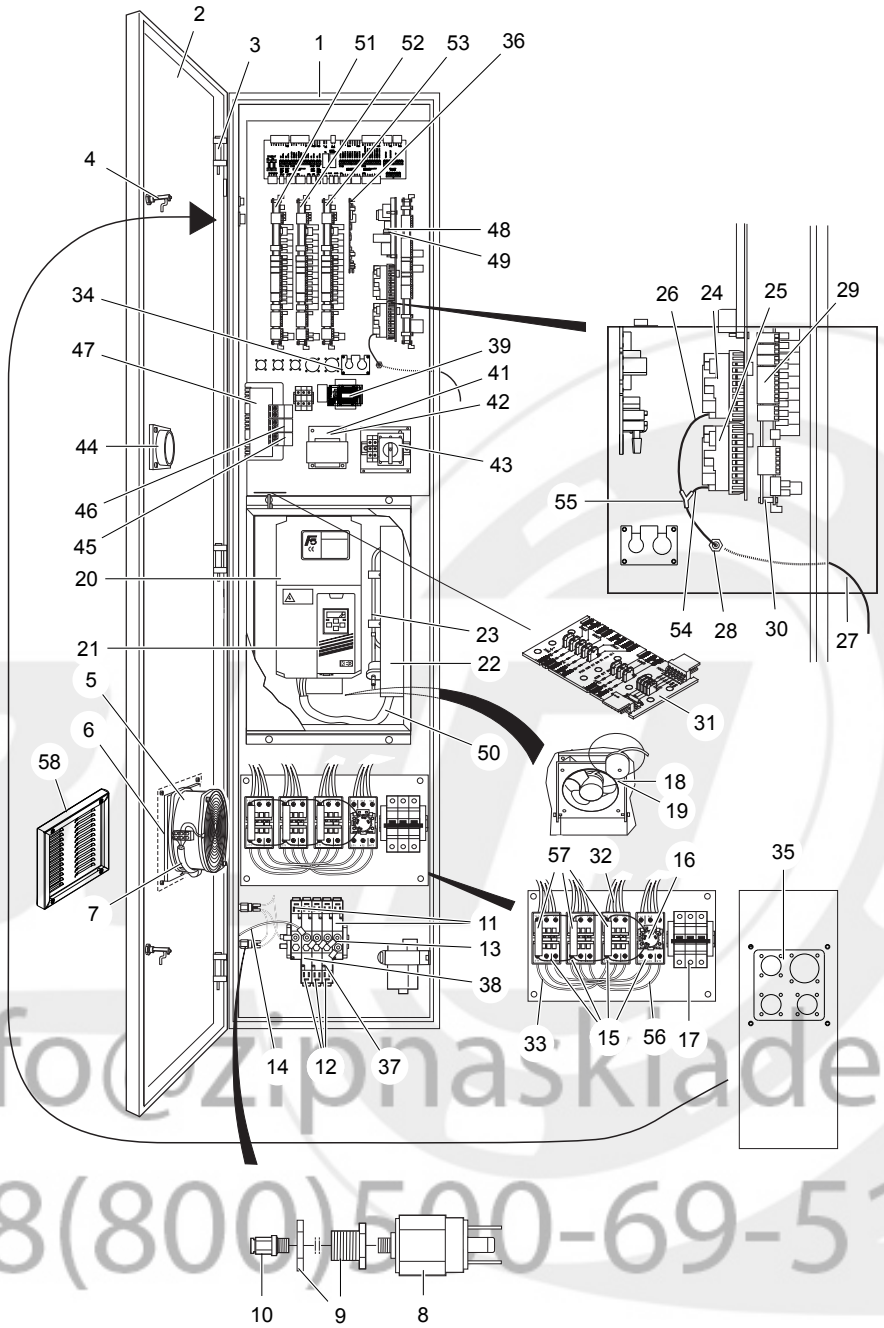

info@zipnaskiade.ru
8(800)500-69-51

Issue Month Year
03 05 16

500227

W4600H
Electric cabinet, rear
Elskåp,bakre
980/001288-

Illustration	Issue	Month	
Illustration	Utgåva	Månad	
500227/2	**8**	**9**	**2017**

Pos	Qty	Part.no	Description	Beskrivning	Notes
21	1	471879902	Program unit	Programenhet	
22	1	438950202	Filter	Filter	230V
23	1	471983704	Heating element	Element	1kW 240V
24	1	471885915	Level control	Nivåkontroll	B5
25	1	471885901	Level control	Nivåkontroll	B2
26	1	471226403	Hose	Slang	L=150
27	1	471244040	Hose	Slang	B1 L=1400
28	2	471816400	Grommet	Genomföring	D7
29	5	438621701	Bracket	Fäste	
30	12	438029901	Spacer	Distans	
31	1	438878002	Printed circuit board	Kretskort	
32	1	438730274	Cable set	Ledningssats	208-240V Heating
32	1	438730276	Cable set	Ledningssats	380-415V Heating
33	1	438730262	Cable set	Ledningssats	36kW
33	1	438730243	Cable set	Ledningssats	54kW
34	1	438621801	Plate	Plåt	
35	1	438621901	Plate	Plåt	
36	1	*	Printed circuit board	Kretskort	See illustration: 500224
37	1	*	Cable set	Ledningssats	See illustration: 500224
38	1	*	Cable set	Ledningssats	See illustration: 500224
39	1	472991225	Kit	Kit	PSU -980/0002069
39	1	432680510	Power supply unit	Strömförsörjningsenhet	980/0002070-
41	1	438957001	Transformer	Transformator	
42	1	*	Cable set	Ledningssats	See illustration: 500224
43	1	438967801	Main switch	Huvudbrytare	3-pole, 32A
43	1	438967804	Main switch	Huvudbrytare	3-pole, 80A
43	1	438967811	Main switch	Huvudbrytare	4-pole, 32A
43	1	471967833	Main switch	Huvudbrytare	3-pole, 100A
43	1	438967901	Main switch	Huvudbrytare	3-pole, 160A

8(800)500-69-51

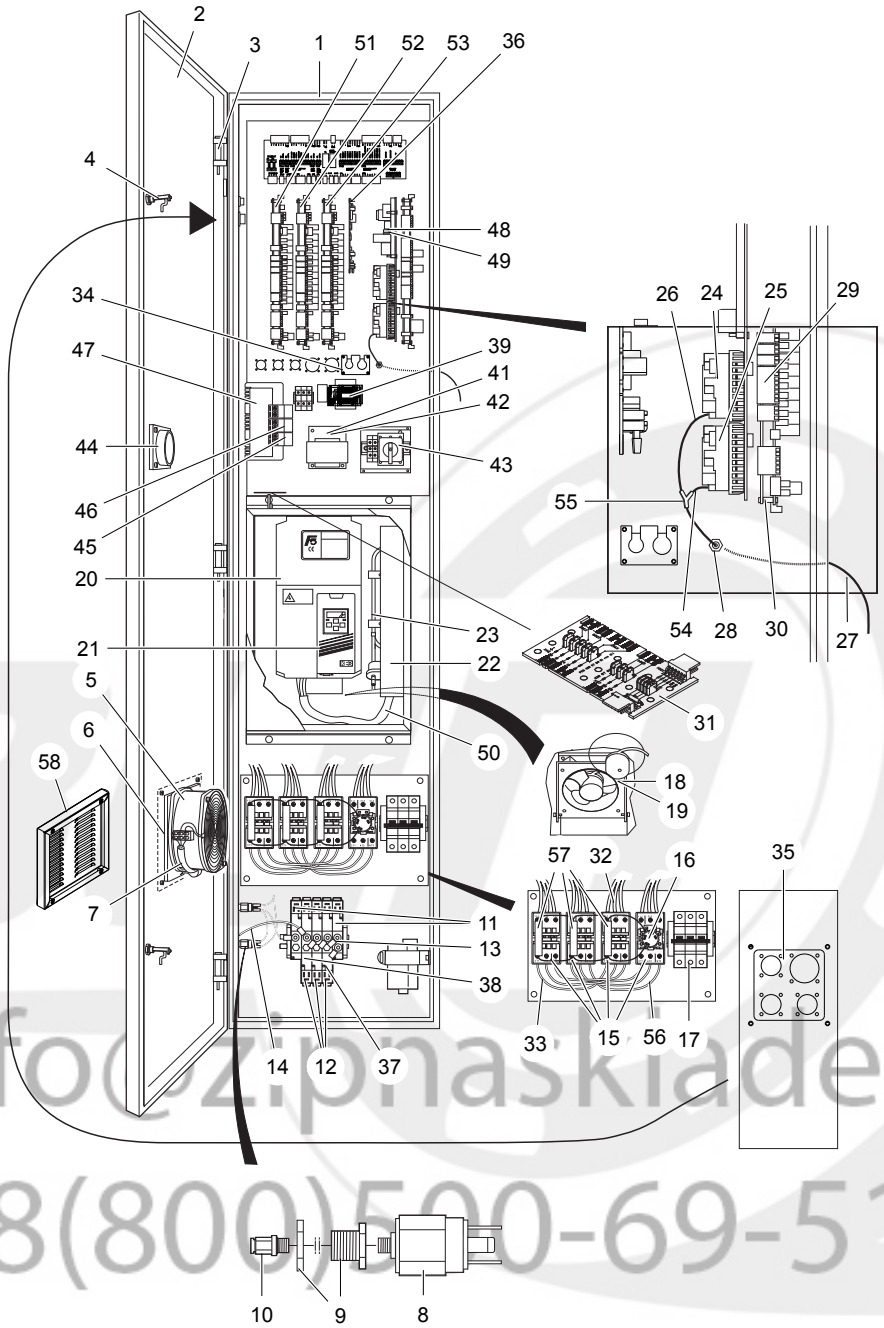

info@zipnaskiade.ru
8(800)500-69-51

Issue Month Year
03 05 16

500227

W4600H
Electric cabinet, rear
Elskåp,bakre
980/001288-

Illustration	Issue	Month	
Illustration	Utgåva	Månad	
500227/2	**8**	**9**	**2017**

Pos	Qty	Part.no	Description	Beskrivning	Notes
43	1	471967893	Knob	Vred	
44	1	471967895	Knob	Vred	
45	1	438730264	Cable set	Ledningssats	
46	1	438730263	Cable set	Ledningssats	
47	1	438950603	Transformer	Transformator	
48	1	438955501	Printed circuit board	Kretskort	B31 Door lock
49	4	471795802	Spacer element	Distansstycke	
50	1	*			Not used
51	1	*	Printed circuit board	Kretskort	A11 I/O-card See illustration: 500224
52	1	*	Printed circuit board	Kretskort	A12 I/O-card See illustration: 500224
53	1	*	Printed circuit board	Kretskort	A13 See illustration: 500224
54	1	471244995	Hose	Slang	L=100
55	1	471226569	T-pipe	T-rör	
56	6	438730277	Cable set	Ledningssats	54kW 400V
56	6	438730278	Cable set	Ledningssats	54kW 230V
57	4	767510292	Auxiliary contact	Hjälpkontakt	HN01 Red
58	1	438624401	Cover	Kåpa	

info@zipnasklade.ru
8(800)500-69-51

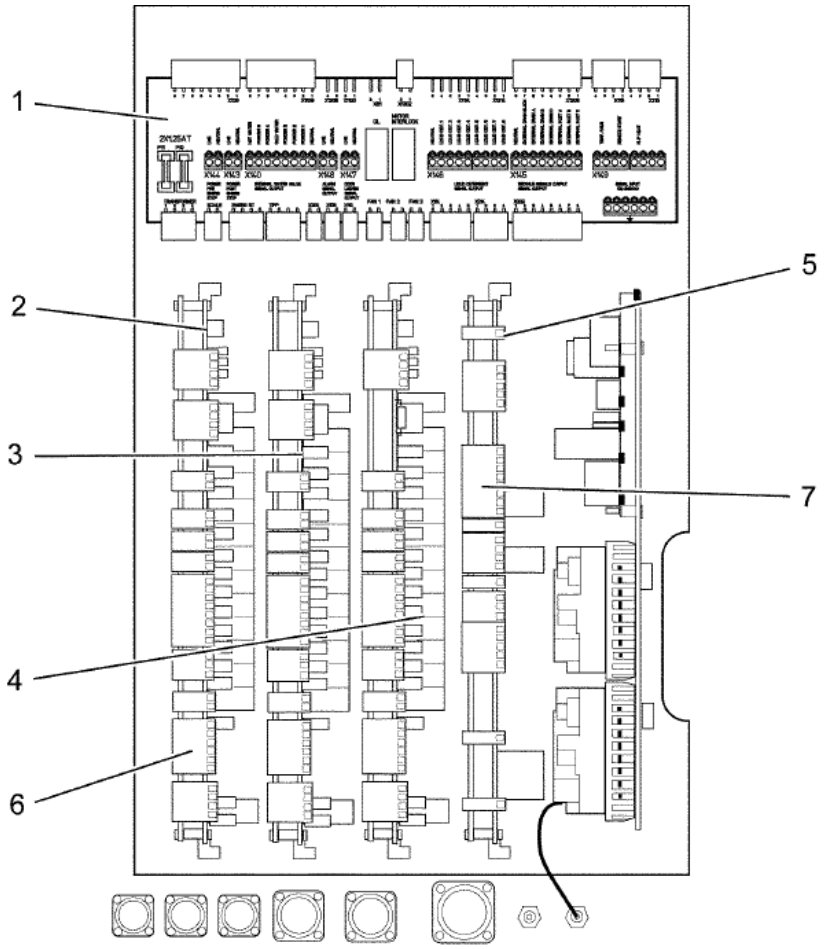

Issue	Month	Year
01	**08**	**11**

500223

W4600H
Printed circuit board
Kretskort
980/000580-001287

Illustration Illustration	Issue Utgåva	Month Månad	
500223/0	**3**	**3**	**2017**

Pos	Qty	Part.no	Description	Beskrivning	Notes
1	1	438877301	Printed circuit board	Kretskort	A21 Distribution card
2	1	471899511	Printed circuit board	Kretskort	A11 I/O-card
3	1	471899512	Printed circuit board	Kretskort	A12 I/O-card
4	1	471899513	Printed circuit board	Kretskort	A13
5	1	438877901	Printed circuit board	Kretskort	
6	1	413291001	Cable set	Ledningssats	Complete Standard
7	1	413291002	Cable set	Ledningssats	Complete Tilt

info@zipnasklade.ru
8(800)500-69-51

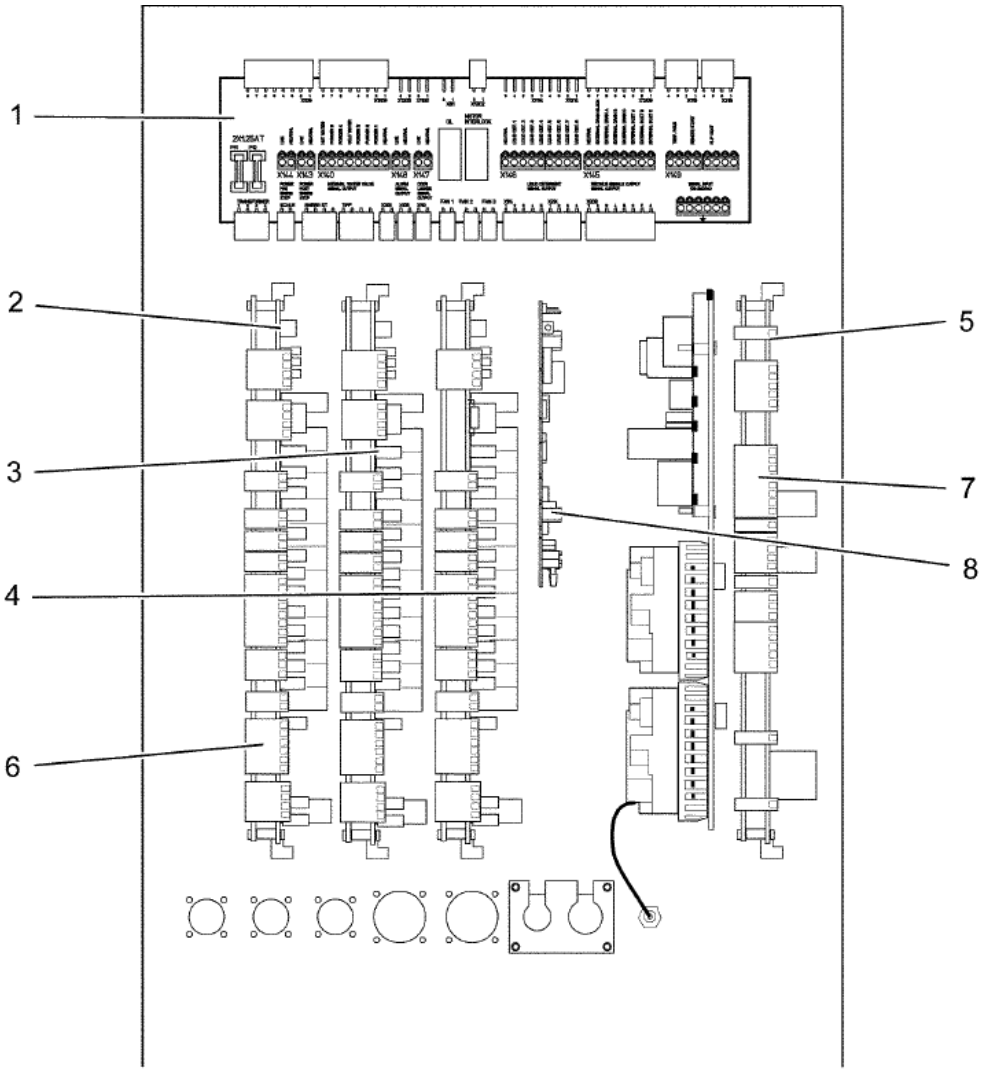

Issue	Month	Year
01	**08**	**11**

500224

W4600H
Printed circuit board
Kretskort
980/001288-

Illustration Illustration	Issue Utgåva	Month Månad	
500224/0	**4**	**3**	**2017**

Pos	Qty	Part.no	Description	Beskrivning	Notes
1	1	438877301	Printed circuit board	Kretskort	A21 Distribution card
2	1	471899511	Printed circuit board	Kretskort	A11 I/O-card
3	1	471899512	Printed circuit board	Kretskort	A12 I/O-card
4	1	471899513	Printed circuit board	Kretskort	I/O-card A13, option
5	1	438877901	Printed circuit board	Kretskort	OPTION
6	1	413291003	Cable set	Ledningssats	Complete
7	1	413291004	Cable set	Ledningssats	Complete
8	1	471899303	Printed circuit board	Kretskort	Without software. Software available on website

info@zipnasklade.ru
8(800)500-69-51

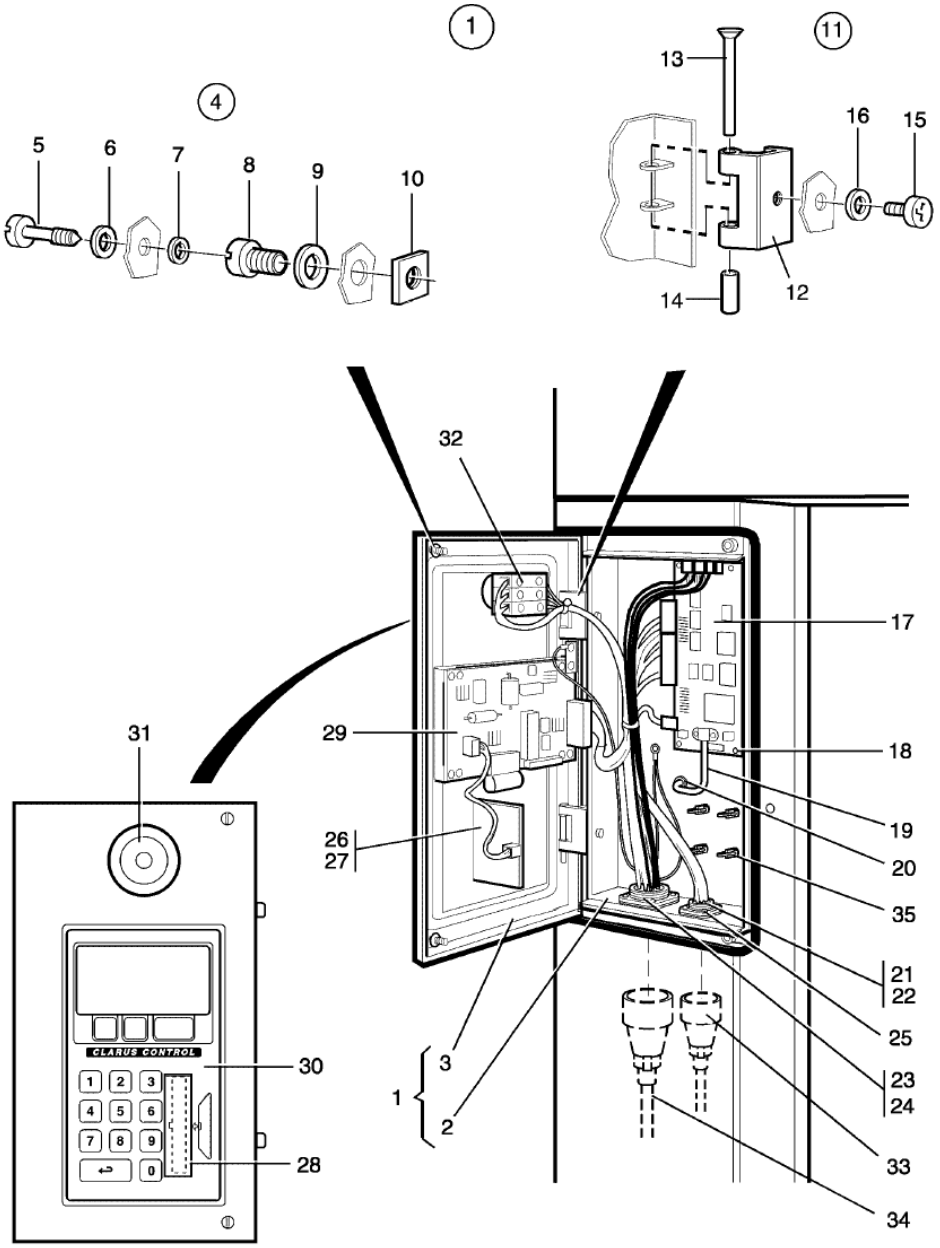

Issue	Month	Year
01	06	06

102368

W4600H
Electric cabinet, front
Elskåp,front
-980/001287

Illustration Illustration	Issue Utgåva	Month Månad	
102368/1	**11**	**6**	**2012**

Pos	Qty	Part.no	Description	Beskrivning	Notes
1	1	432017301	Box	Låda	
2	1	432014601	• *Box*	• *Låda*	
3	1	432014301	• *Door*	• *Dörr*	
4	2	471836201	• *Bracket*	• *Fäste*	Complete
5	2	471836210	•• *Screw*	•• *Skruv*	
6	2	471836220	•• *Washer*	•• *Bricka*	
7	2	471836230	•• *Washer*	•• *Bricka*	
8	2	471836240	•• *Nut*	•• *Mutter*	
9	2	471836250	•• *Washer*	•• *Bricka*	
10	2	471836260	•• *Nut*	•• *Mutter*	
11	2	471783701	• *Hinge*	• *Gångjärn*	COMPL.
12	2	471783710	•• *Hinge*	•• *Gångjärn*	
13	2	471783730	•• *Pin*	•• *Sprint*	
14	2	471783740	•• *Safety cover*	•• *Skyddshuv*	
15	2	471783750	•• *Screw*	•• *Skruv*	
16	2	471783760	••• *Washer*	••• *Bricka*	
17	1	471899303	Printed circuit board	Kretskort	Without software. Software available on website
18	4	471834111	Screw	Skruv	MRT 4X6
19	1	438812003	Hose	Slang	L=1600
20	1	471816400	Grommet	Genomföring	D7
21	1	438730040	Cable set	Ledningssats	
22	1	438815203	Gasket	Packning	4-pole AMP
23	1	438730040	Cable set	Ledningssats	
24	1	438815201	Gasket	Packning	37-pole AMP
25	8	471845401	Rivet	Nit	
26	1	471879301	Card reader	Kortläsare	
27	1	432015001	Bracket	Hållare	
28	1	432014901	Rubber cap	Gummihuv	
29	1	471899704	Display	Display	
30	1	472578701	Control panel	Manöverpanel	

8(800)500-69-51

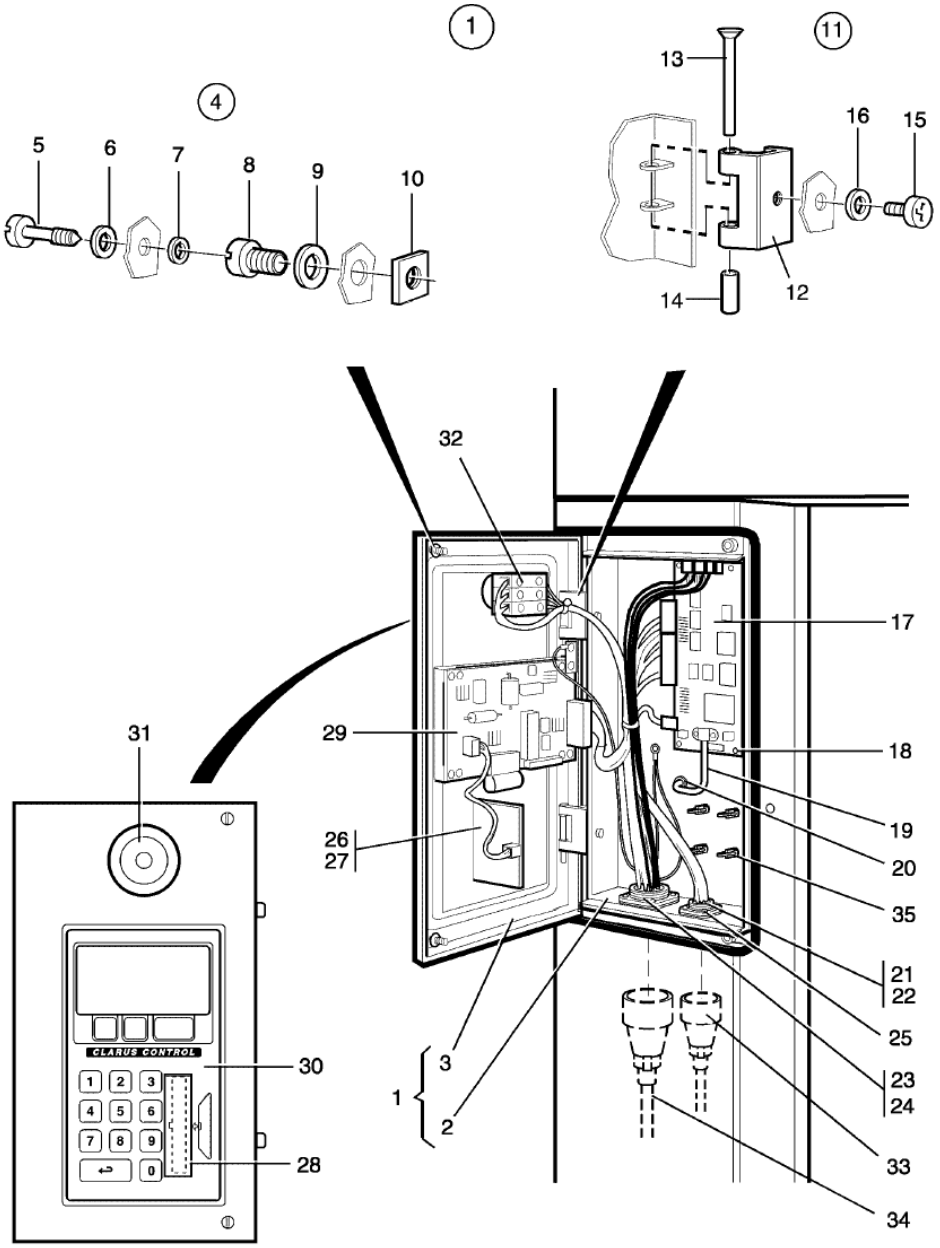

Issue	Month	Year
01	06	06

102368

W4600H
Electric cabinet, front
Elskåp,front
-980/001287

Illustration	Issue	Month	
Illustration	Utgåva	Månad	
102368/1	**11**	**6**	**2012**

Pos	Qty	Part.no	Description	Beskrivning	Notes
31	1	471962832	Push-button	Tryckknapp	
32	1	471962833	Contact block	Kontaktblock	
33	1	438730042	Cable set	Ledningssats	Sensor, temp.
34	1	438730041	Cable set	Ledningssats	
35	4	471795802	Spacer element	Distansstycke	

info@zipnasklade.ru
8(800)500-69-51

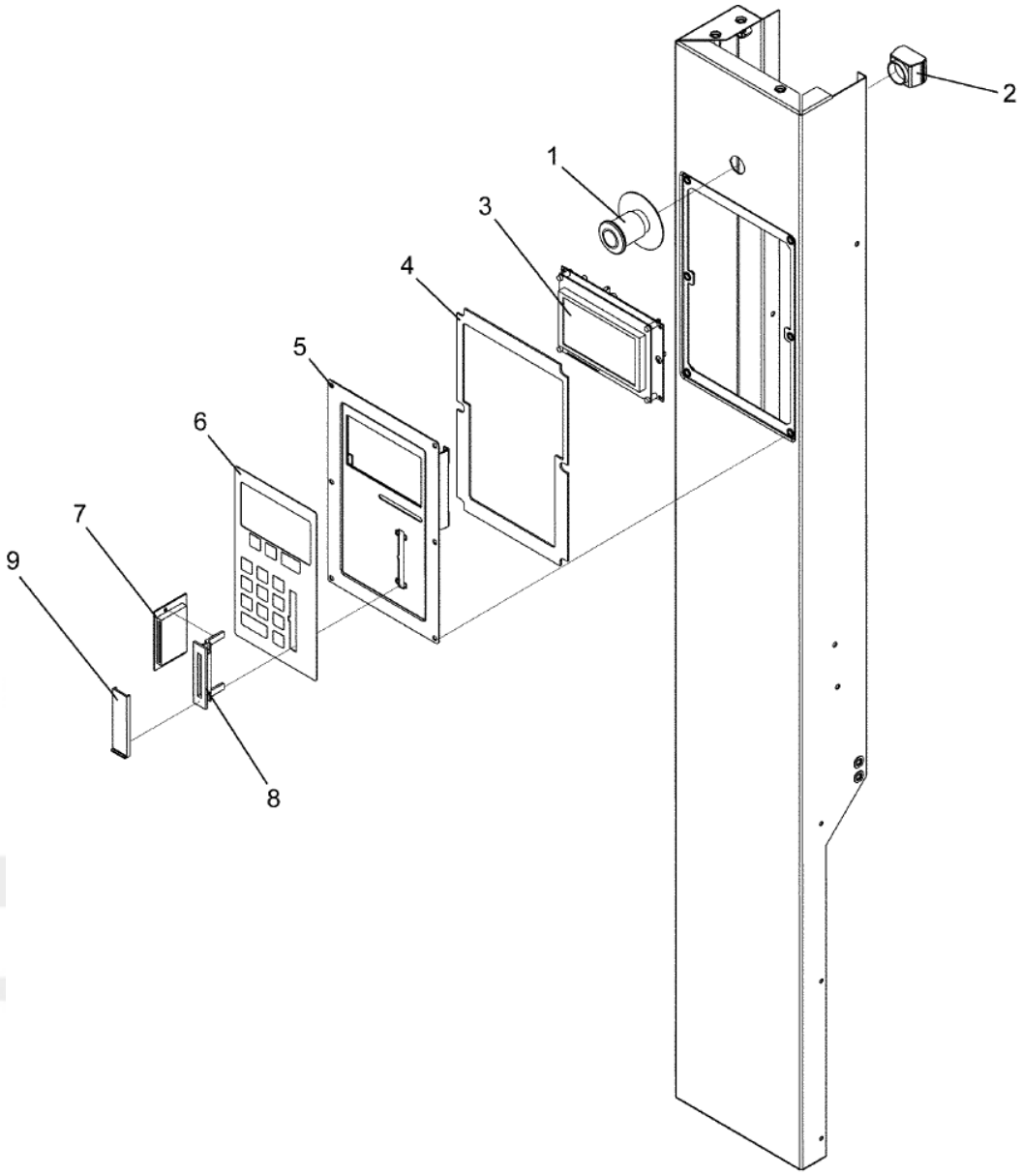

500214

Issue Month Year
01 04 11

W4600H
Electric cabinet, front
Elskåp,front
980/001288-

Illustration	Issue	Month	
Illustration	Utgåva	Månad	
500214/0	**1**	**8**	**2011**

Pos	Qty	Part.no	Description	Beskrivning	Notes
1	1	471962832	Push-button	Tryckknapp	
2	1	471962833	Contact block	Kontaktblock	
3	1	471899705	Display	Display	
4	1	438622501	Gasket	Packning	
5	1	438621201	Plate	Plåt	
6	1	472578701	Control panel	Manöverpanel	
7	1	471879301	Card reader	Kortläsare	
8	1	432015001	Bracket	Hållare	
9	1	432014901	Rubber cap	Gummihuv	

info@zipnasklade.ru
8(800)500-69-51

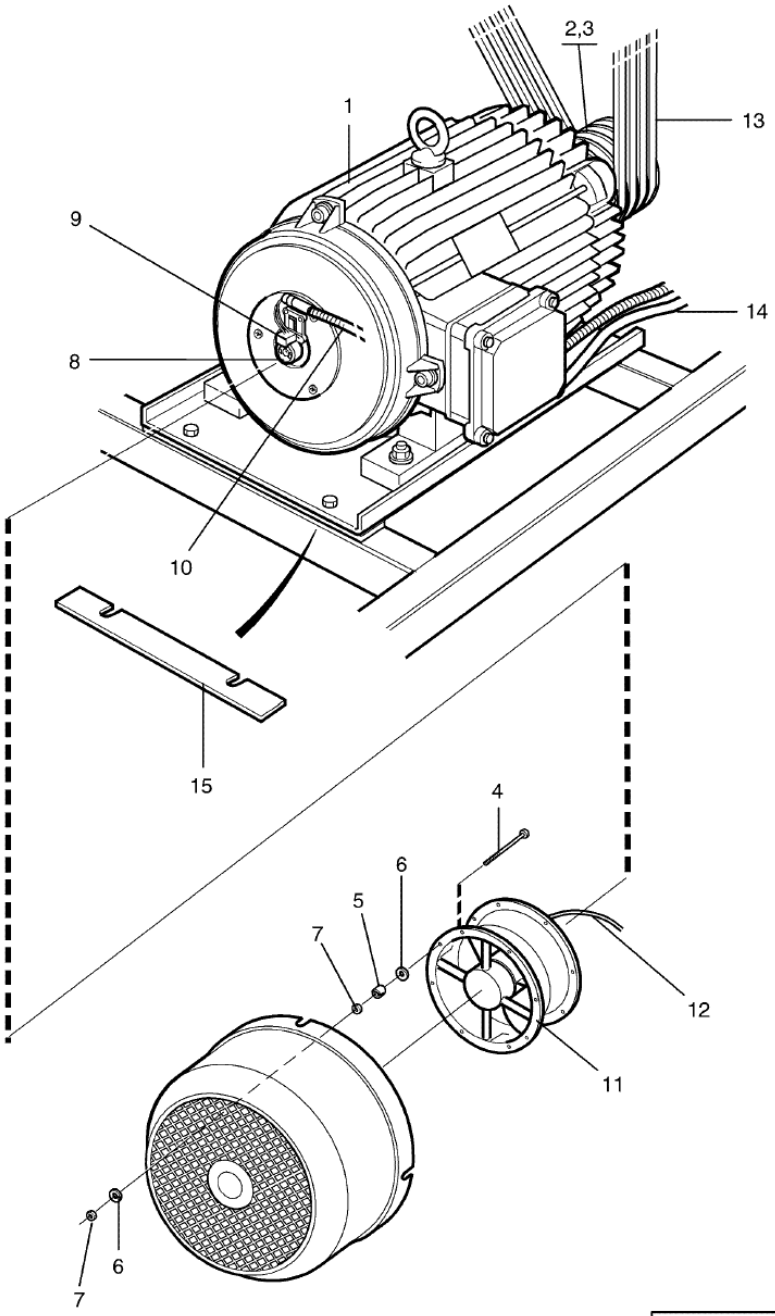

Issue	Month	Year
01	**11**	**06**

102400

W4600H
Motor
Motor

Illustration	Issue	Month	
Illustration	Utgåva	Månad	
102400/1	**3**	**4**	**2014**

Pos	Qty	Part.no	Description	Beskrivning	Notes
1	1	472991223	Motor	Motor	
2	1	438580701	• *Pulley*	• *Remskiva*	
3	2	728844501	• *Screw*	• *Skruv*	SK6SS 8X10
4	3	471834118	Screw	Skruv	M4X30
5	3	471552300	Spacer	Distans	
6	6	734180851	Washer	Bricka	NB 5X16
7	3	732211201	Locking nut	Låsmutter	M4
8	1	432390501	Magnet	Magnet	
9	1	472991344	Sensor	Givare	
10	1	438730241	Cable set	Ledningssats	
11	1	438960110	Fan	Fläkt	
12	1	438730238	Cable set	Ledningssats	
13	1	471770166	Ribbed belt	Poly-V-rem	
14	1	438730250	Cable set	Ledningssats	Motor
15	16	438583702	Washer	Mellanlägg	

info@zipnasklade.ru
8(800)500-69-51

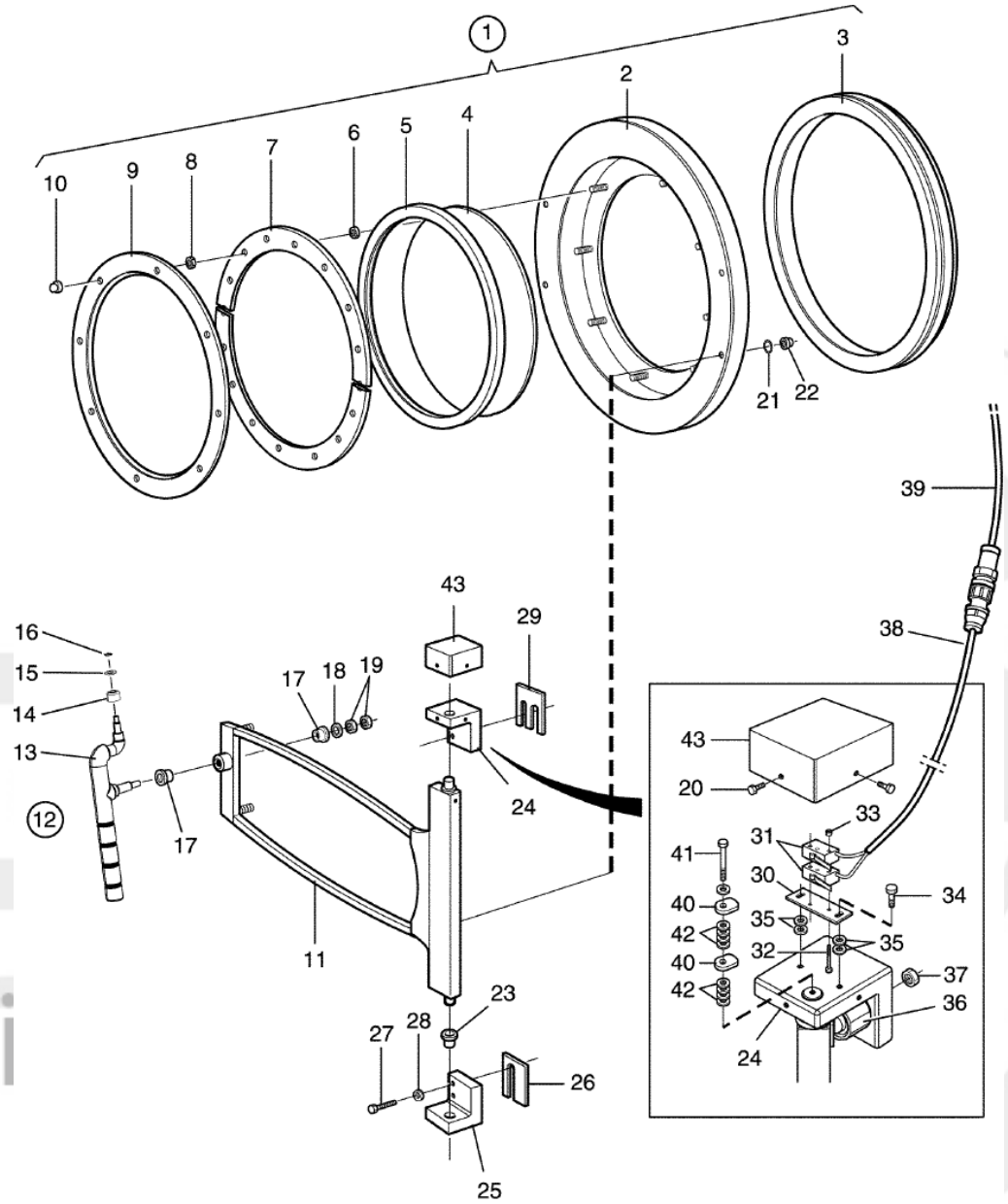

Issue	Month	Year
04	08	10

102369

W4600H
Door
Lucka

Illustration	Issue	Month	
Illustration	Utgåva	Månad	
102369/1	**3**	**9**	**2010**

Pos	Qty	Part.no	Description	Beskrivning	Notes
1	1	432031302	Door	Lucka	Complete
2	1	471551604	• *Door ring*	• *Luckring*	
3	1	471563100	• *Door gasket*	• *Luckpackning*	
4	1	432011301	• *Door glass*	• *Luckglas*	
5	1	471551101	• *Seal*	• *Tätning*	
6	16	471552300	• *Spacer*	• *Distans*	
7	1	438483201	• *Washer*	• *Bricka*	
8	16	731231601	• *Nut*	• *Mutter*	M6
9	1	471552501	• *Ring*	• *Ring*	
10	16	732311614	• *Nut*	• *Mutter*	M6
11	1	438585002	Frame	Ram	
12	1	438620301	Handle	Handtag	Complete
13	1	438599901	• *Handle*	• *Handtag*	
14	1	471922897	• *Bearing*	• *Lager*	
15	1	734117609	• *Washer*	• *Bricka*	12,0x22,0x2,0
16	1	735311409	• *C-clamp*	• *Spårring*	SG 12 RF
17	2	471922898	Bearing	Lager	
18	1	471246140	Washer	Bricka	
19	2	731232042	Nut	Mutter	M10
20	3	725236442	Screw	Skruv	M6X10
21	4	734115309	Washer	Bricka	BRB 6,4X12
22	4	732311614	Nut	Mutter	M6
23	2	471920924	Bearing	Lager	
24	1	432505503	Hinge mounting	Gångjärnsfäste	Upper
25	1	432505504	Hinge mounting	Gångjärnsfäste	Lower
26	2	432036502	Spacer	Distans	Lower
27	4	725254242	Screw	Skruv	M12X50
28	4	734117809	Washer	Bricka	BRB 13X24
29	2	432036501	Spacer	Distans	Upper
30	1	432036801	Plate	Platta	

info@zipnaskiade.ru
8(800)500-69-51

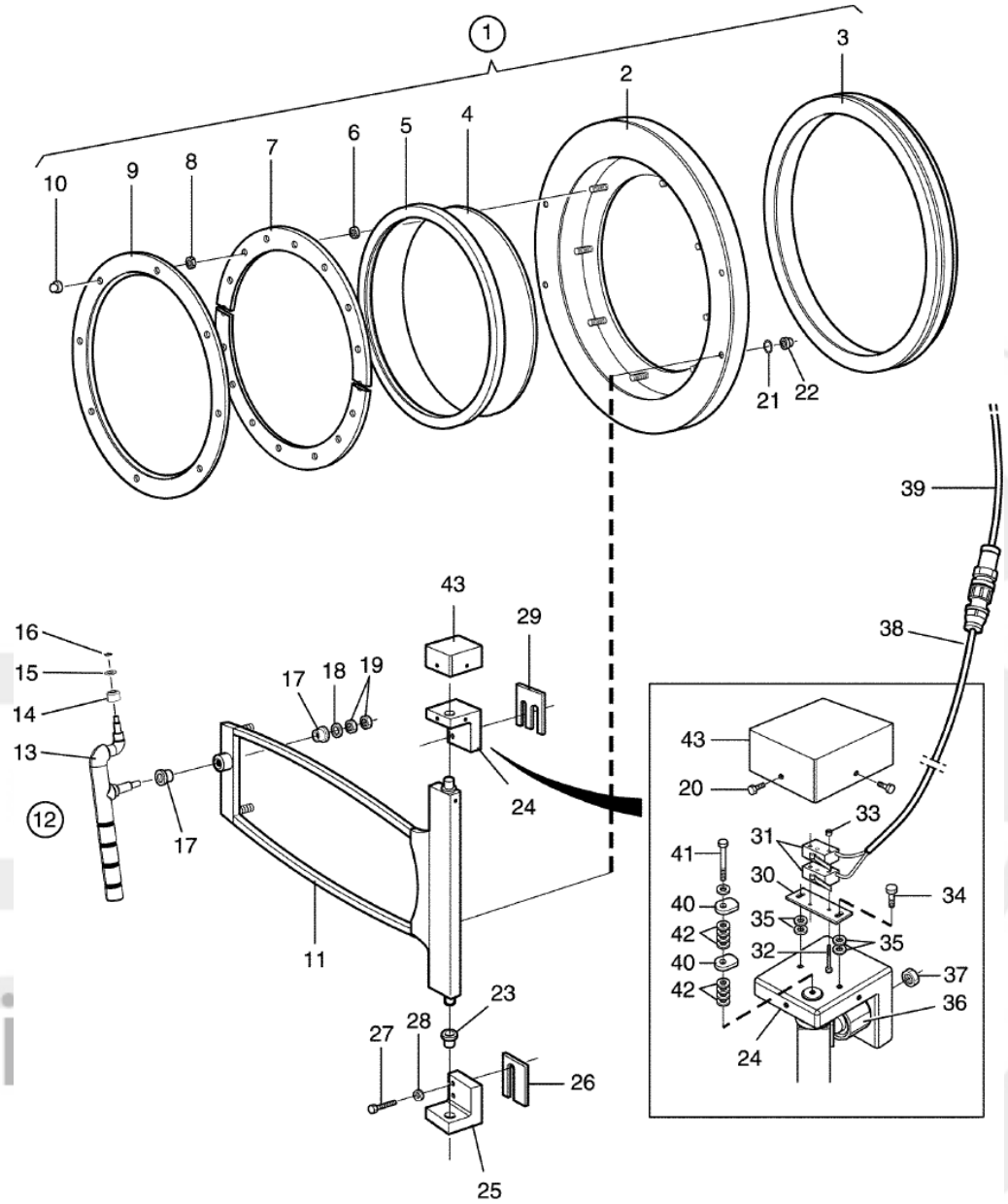

Issue	Month	Year
04	08	10

102369

W4600H
Door
Lucka

Illustration	Issue	Month	
Illustration	Utgåva	Månad	
102369/1	**3**	**9**	**2010**

Pos	Qty	Part.no	Description	Beskrivning	Notes
31	Rq	471962502	Microswitch	Microbrytare	
32	2	471834108	Screw	Skruv	MRT 3x30
33	2	732211001	Locking nut	Låsmutter	M3
34	2	725236851	Screw	Skruv	M6X16
35	4	734115309	Washer	Bricka	BRB 6,4X12
36	1	432037501	Sleeve	Hylsa	
37	1	732212201	Locking nut	Låsmutter	M12
38	1	438730048	Cable set	Ledningssats	Sensor, dor lock incl. microswitch
39	1	438730221	Cable set	Ledningssats	Not used
40	2	432033901	Heel	Klack	
41	1	725237451	Screw	Skruv	M6X30
42	8	734115309	Washer	Bricka	BRB 6,4X12
43	1	432037801	Cover	Kåpa	

info@zipnasklade.ru
8(800)500-69-51

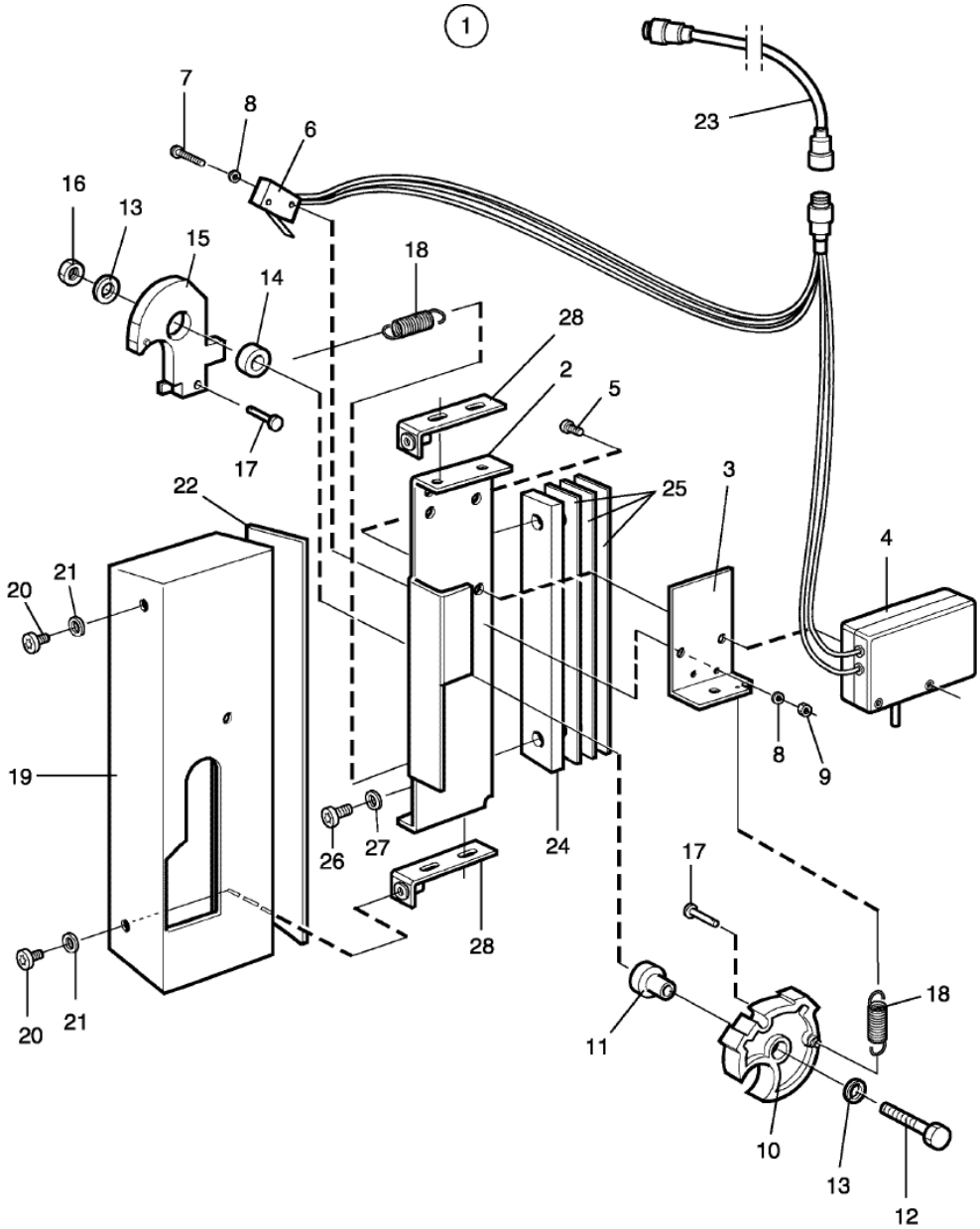

Issue	Month	Year
01	06	06

102370

W4600H
Door lock
Lucklås

Illustration Illustration	Issue Utgåva	Month Månad	
102370/1	**4**	**11**	**2008**

Pos	Qty	Part.no	Description	Beskrivning	Notes
1	1	432017002	Door lock	Lucklås	Complete
2	1	432015801	• *Bracket*	• *Konsol*	
3	1	432015901	• *Plate*	• *Plåt*	
4	1	438730043	• *Actuator*	• *Aktuator*	
5	2	471834424	• *Screw*	• *Skruv*	M5X12
6	1	471962503	• *Microswitch*	• *Mikrobrytare*	
7	2	471834107	• *Screw*	• *Skruv*	MRT 3X25
8	2	734112401	• *Washer*	• *Bricka*	BRB 3X7
9	2	732211001	• *Locking nut*	• *Låsmutter*	M3
10	1	432016101	• *Wheel*	• *Hjul*	
11	1	471747701	• *Shaft*	• *Axel*	
12	1	725246171	• *Screw*	• *Skruv*	M8X50
13	2	734116401	• *Washer*	• *Bricka*	8,4X17
14	1	471747601	• *Bushing*	• *Bussning*	
15	1	432016401	• *Cam*	• *Kam*	
16	1	732211801	• *Locking nut*	• *Låsmutter*	M8
17	2	471797601	• *Bolt*	• *Bult*	
18	2	471787601	• *Spring*	• *Fjäder*	
19	1	432031901	• *Cover*	• *Kåpa*	
20	2	471834433	• *Screw*	• *Skruv*	M6X10
21	2	734115309	• *Washer*	• *Bricka*	BRB 6,4X12
22	1	471244970	• *Rubber strip*	• *Gummilist*	
23	1	438730007	Cable set	Ledningssats	
24	1	432038101	Spacer	Distans	
25	Rq	432016601	Washer	Mellanlägg	
26	2	725245542	Screw	Skruv	M8X30
27	2	734116409	Washer	Bricka	BRB 8,4X17
28	2	432037001	Bracket	Fäste	

info@zipnasklade.ru
8(800)500-69-51

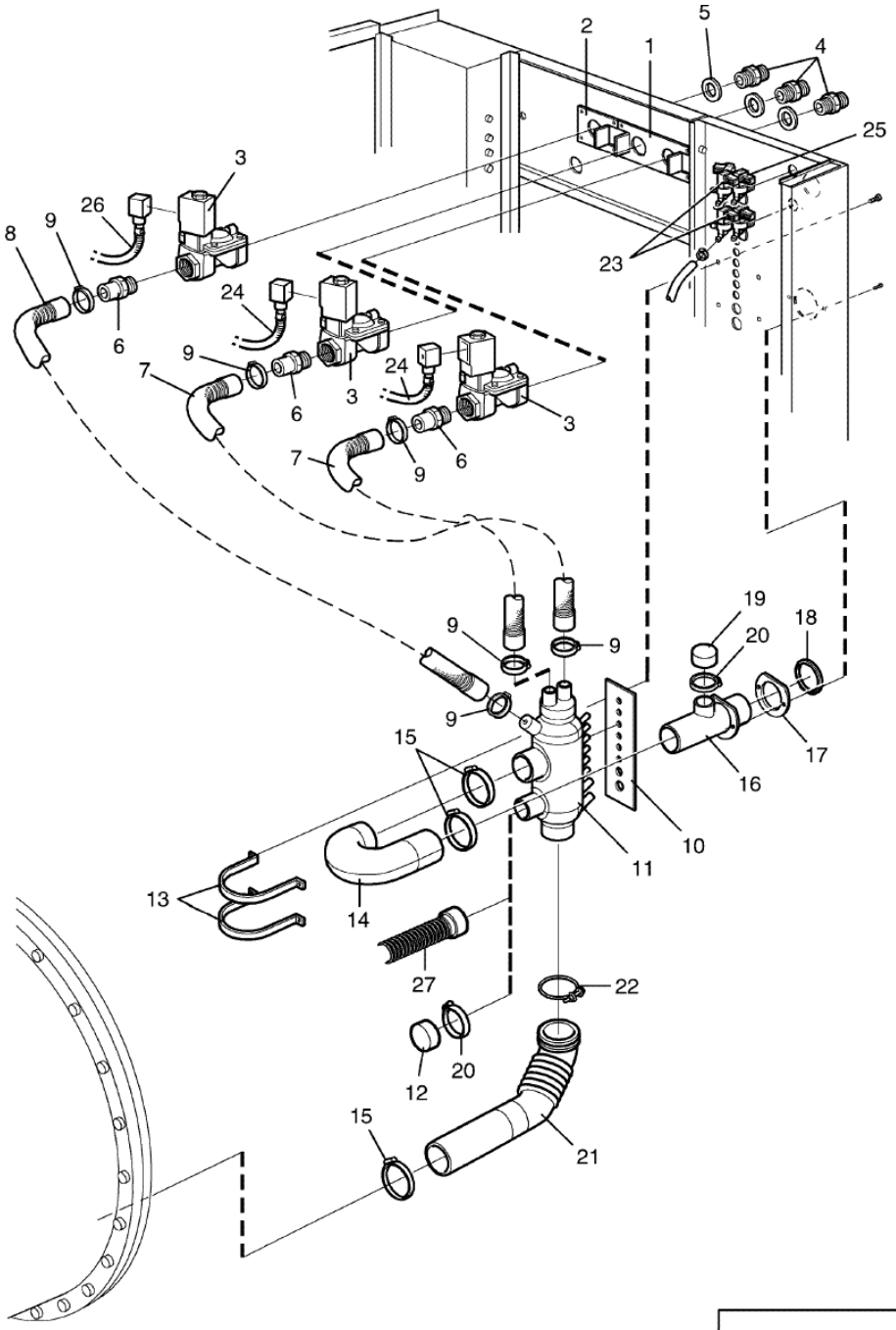

Issue	Month	Year
01	11	06

102402

W4600H
Water connections
Vattenanslutningar

Illustration Illustration	Issue Utgåva	Month Månad	
102402/1	**12**	**6**	**2015**

Pos	Qty	Part.no	Description	Beskrivning	Notes
1	1	438588103	Mounting plate	Fästplåt	1''
1	1	438588101	Mounting plate	Fästplåt	1 1/4''
2	1	438588104	Mounting plate	Fästplåt	1''
2	1	438588102	Mounting plate	Fästplåt	1 1/4''
3	3	471821024	Valve	Ventil	1'' 220-240V 50Hz, 1'' 208-230V 60Hz
3	3	471821033	Valve	Ventil	1 1/4'' 220-240V 50Hz, 1 1/4'' 208-230V 60Hz
4	3	471862209	Nipple	Nippel	DN25 1''
4	3	741311721	Nipple	Nippel	DN32
5	3	471819903	Gasket	Packning	65X48X2
5	3	471819905	Gasket	Packning	65X38X2
6	3	471241833	Nipple	Nippel	1''
6	3	472637502	Hose nipple	Slangnippel	1 1/4''
7	2	432517701	Hose	Slang	
8	1	432517702	Hose	Slang	
9	6	736283151	Hose clamp	Slangklämma	Ø36-42
10	1	438591901	Gasket	Packning	
11	1	432517201	Siphon breaker	Återsugningsskydd	
12	1	471240989	Hood	Huv	
13	2	432518801	Clamp	Bygel	
14	1	432515201	Hose	Slang	
15	3	736284951	Hose clamp	Slangklämma	Ø77-93
16	1	432251101	Drain pipe connection	Avloppsstos	
17	1	438815701	Gasket	Packning	
18	1	438501601	Rubber ring	Manschett	
19	1	471240989	Hood	Huv	
20	2	736283751	Hose clamp	Slangklämma	Ø48-54

info@zipnasklade.ru
8(800)500-69-51

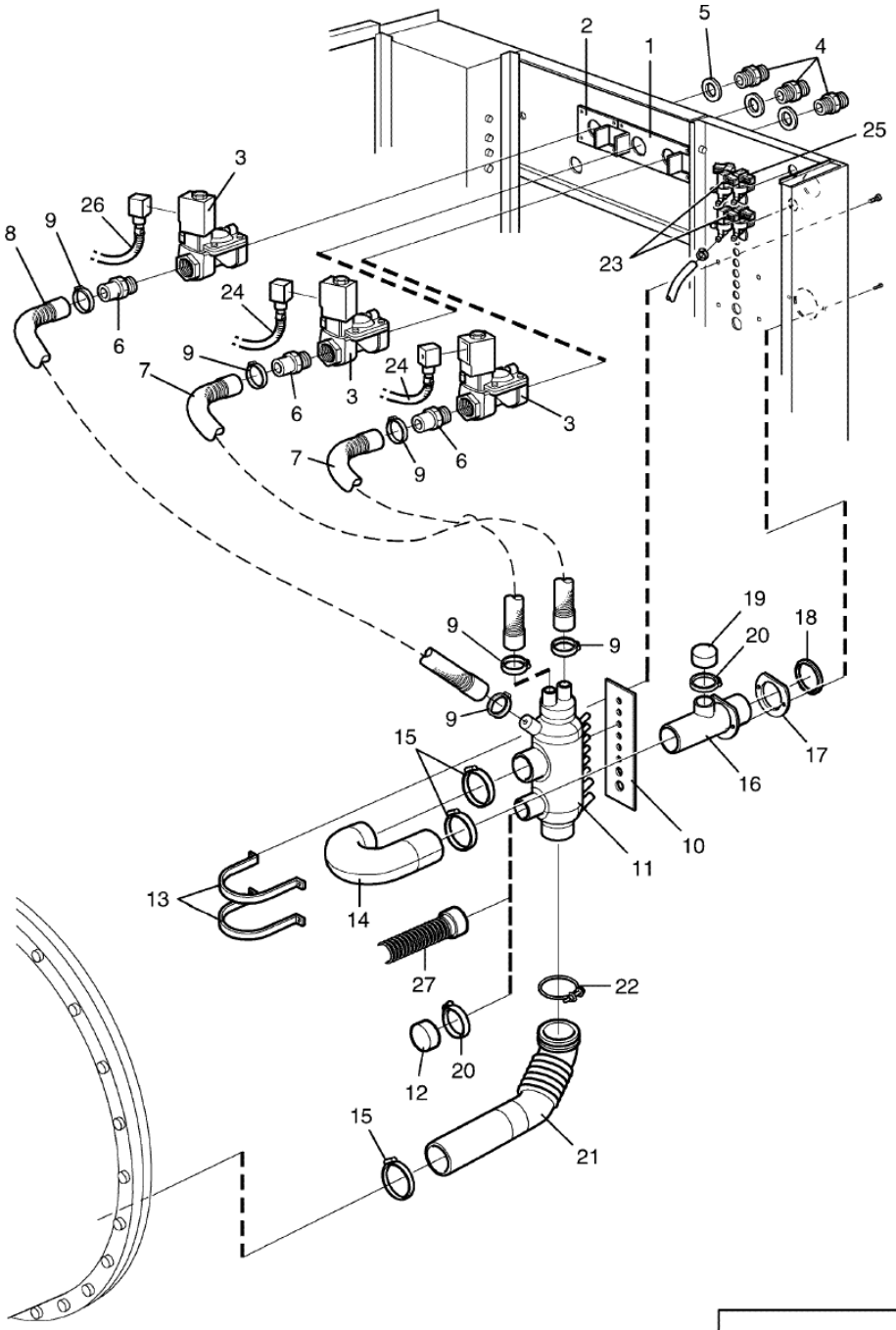

Issue	Month	Year
01	11	06

102402

W4600H
Water connections
Vattenanslutningar

Illustration Illustration	Issue Utgåva	Month Månad	
102402/1	**12**	**6**	**2015**

Pos	Qty	Part.no	Description	Beskrivning	Notes
21	1	432251602	Hose	Slang	
22	1	471787107	Hose clamp	Slangklämma	
23	2	471823657	Valve	Ventil	3-way, 208-240V 50/60Hz, BSP
24	1	438730208	Cable set	Ledningssats	
25	1	438730239	Cable set	Ledningssats	Front mounted Soap box
26	1	438730058	Cable set	Ledningssats	
27	1	432517703	Hose	Slang	W4400H, EX6102cl
27	1	432517704	Hose	Slang	W4600H, EX6135cl

info@zipnasklade.ru
8(800)500-69-51

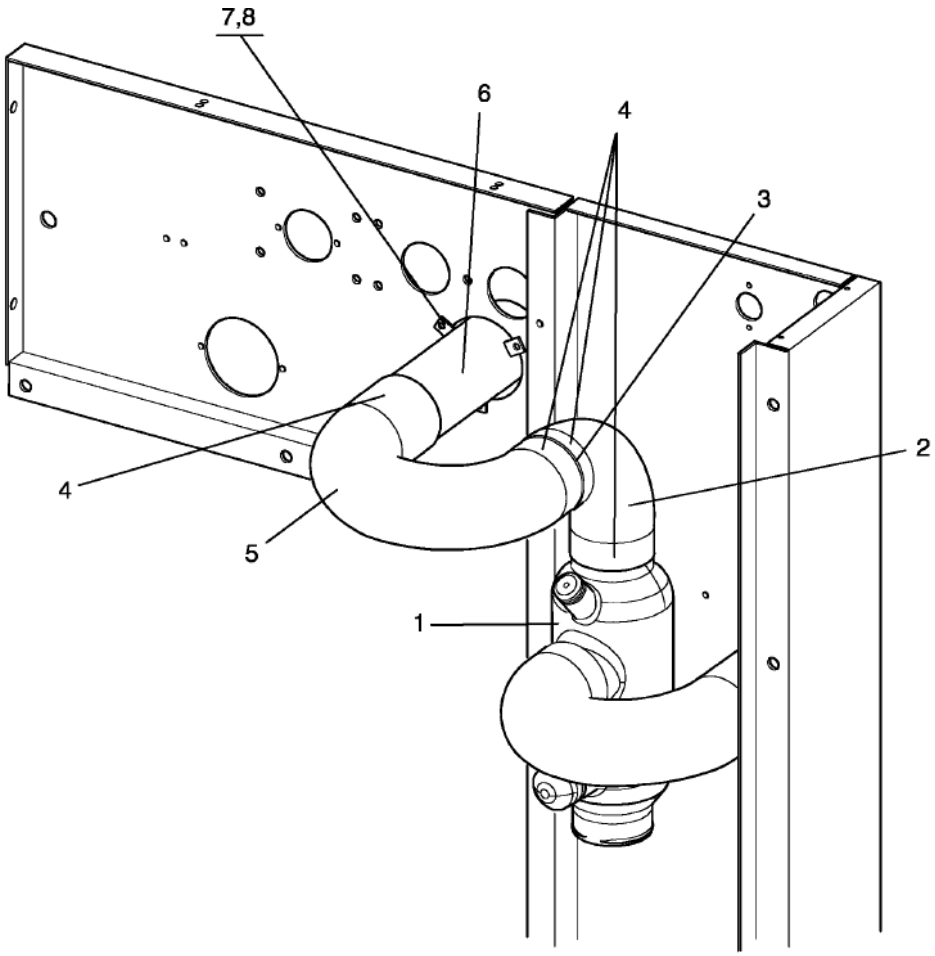

Issue	Month	Year
01	**06**	**06**

102377

W4600H
Water alternatives Lindström
Vattenalt. Lindström

Illustration Illustration	Issue Utgåva	Month Månad	
102377/1	**2**	**2**	**2007**

Pos	Qty	Part.no	Description	Beskrivning	Notes
1	1	432517201	Siphon breaker	Återsugningsskydd	
2	2	432517701	Hose	Slang	
3	1	*	Joint sleeve	Skarvhylsa	Not used
4	7	736283151	Hose clamp	Slangklämma	Ø36-42
5	1	*	Hose	Slang	Not used
6	1	438595801	Connection	Anslutning	
7	3	471834144	Screw	Skruv	MRT 6X12
8	3	732211601	Locking nut	Låsmutter	M6

info@zipnasklade.ru
8(800)500-69-51

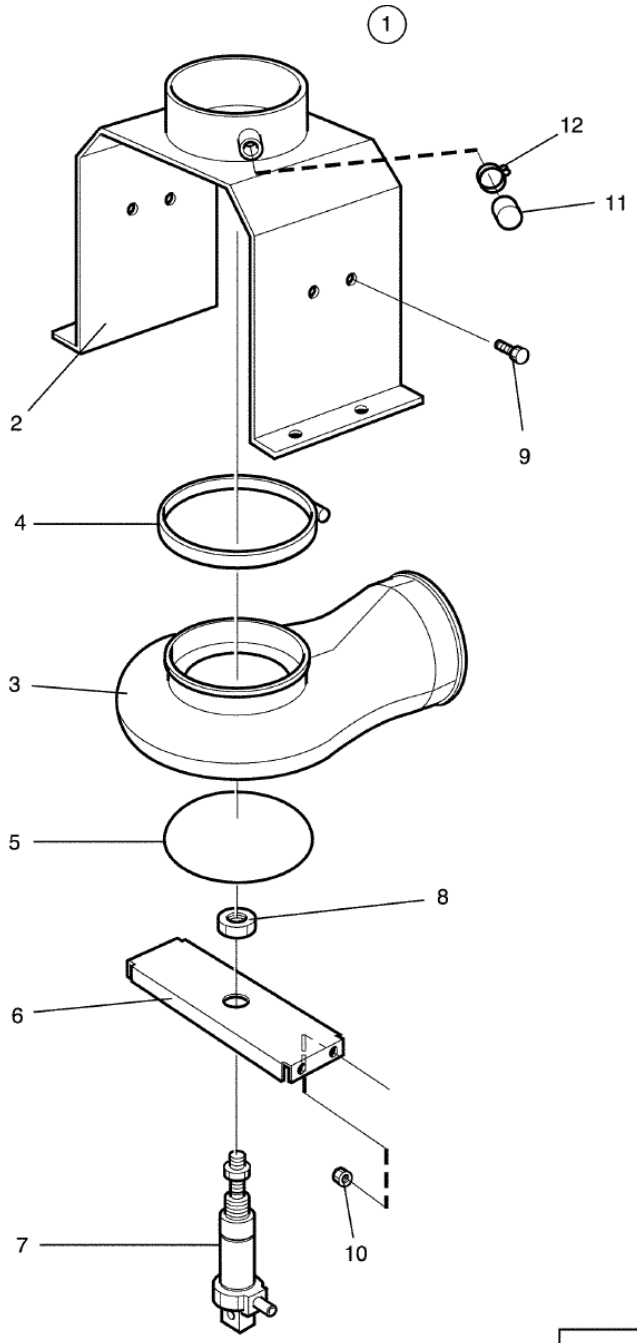

Issue	Month	Year
01	**12**	**08**

102595

W4600H
Drain valve
Avloppsventil

Illustration	Issue	Month	
Illustration	Utgåva	Månad	
102595/0	**1**	**12**	**2008**

Pos	Qty	Part.no	Description	Beskrivning	Notes
1	1	438498203	Drain valve	Avloppsventil	Complete
1	1	438498204	Drain valve	Avloppsventil	Complete
2	1	438495103	• *Housing*	• *Hus*	
2	1	438495104	• *Housing*	• *Hus*	
3	1	438492101	• *Hose*	• *Slang*	
4	1	736285551	• *Hose clamp*	• *Slangklämma*	Ø138
5	2	438492401	• *Pressure plate*	• *Tryckplatta*	
6	1	438496101	• *Bracket*	• *Brygga*	
7	1	471828101	• *Air cylinder*	• *Luftcylinder*	
8	1	732211801	• *Locking nut*	• *Låsmutter*	M8
9	4	725236661	• *Screw*	• *Skruv*	M6SF 6X12
10	4	732211601	• *Locking nut*	• *Låsmutter*	M6
11	1	471903773	• *Sleeve*	• *Hylsa*	
12	1	736281651	• *Hose clamp*	• *Slangklämma*	Ø13-19

info@zipnasklade.ru
8(800)500-69-51

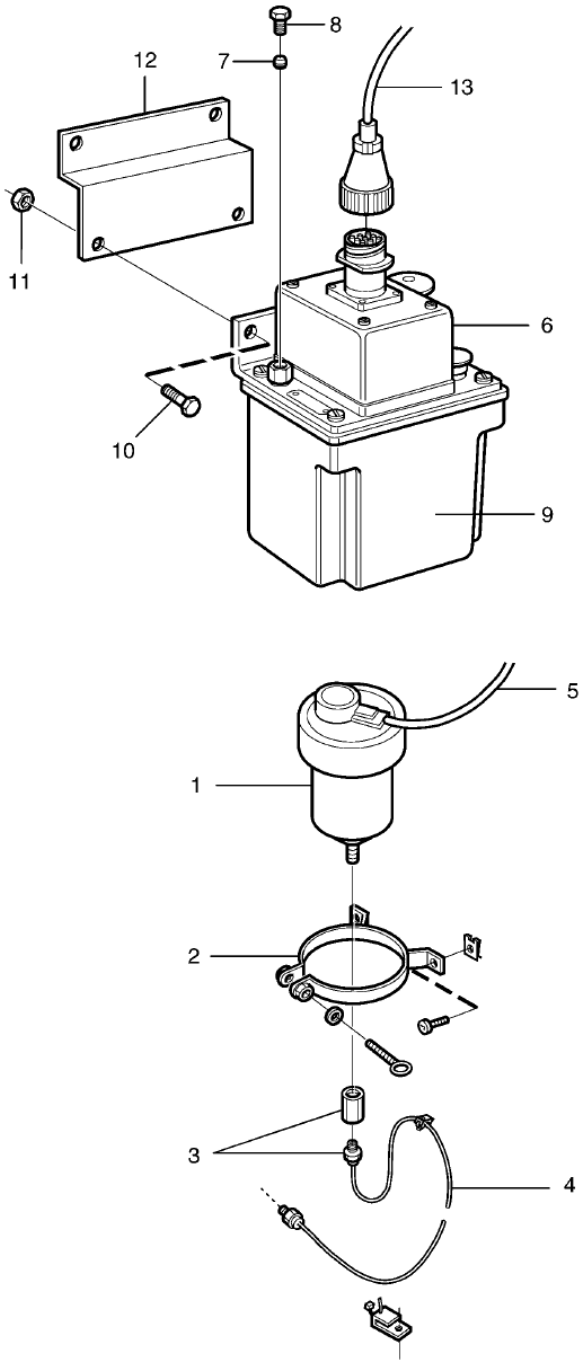

Issue	Month	Year
03	04	04

101978

Pos	Qty	Part.no	Description	Beskrivning	Notes
1	1	471827602	Pump	Pump	Complete
2	1	471827612	Bracket	Hållare	
3	1	471869072	Nipple	Nippel	Complete
4	Rq	471862500	Hose	Slang	
5	1	438730204	Cable set	Ledningssats	
6	1	471826011	Pump	Pump	50/60Hz
6	1	471826092	• *Level control*	• *Nivåkontroll*	
6	1	471826056	• *Container*	• *Behållare*	
7	1	471826091	Cone	Kona	
8	1	471826090	Bushing	Bussning	
9	Rq	471743301	Oil	Olja	
10	2	471834124	Screw	Skruv	M5X12
11	2	732211401	Locking nut	Låsmutter	M5
12	1	438591601	Bracket	Konsol	
13	1	438730286	Cable set	Ledningssats	

info@zipnasklade.ru
8(800)500-69-51

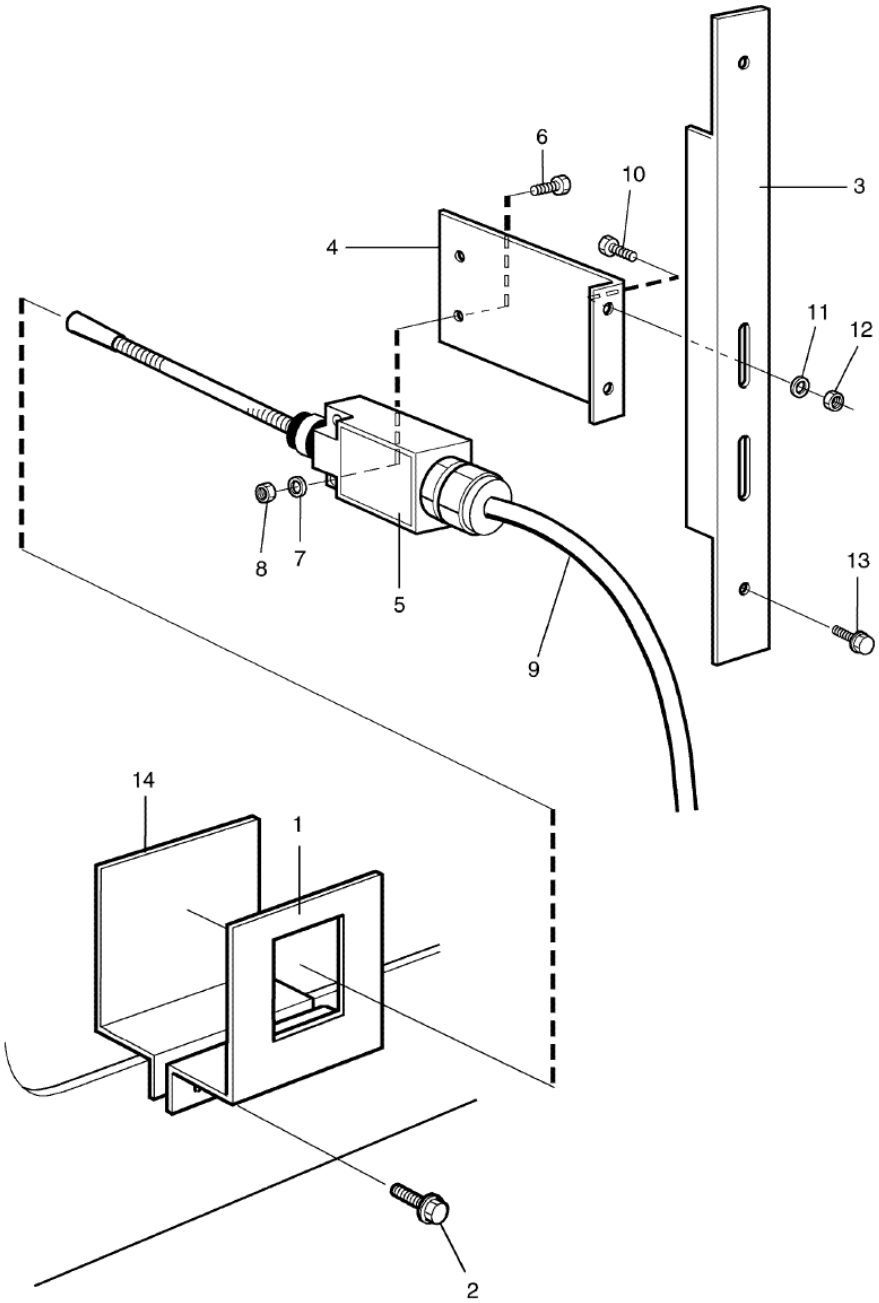

Issue	Month	Year
02	11	06

102371

W4600H
Out of balance switch
Obalansbrytare

Illustration Illustration	Issue Utgåva	Month Månad	
102371/1	**4**	**11**	**2008**

Pos	Qty	Part.no	Description	Beskrivning	Notes
1	1	432039202	Clamp	Bygel	
2	2	725236661	Screw	Skruv	M6SF 6X12
3	1	472639002	U-section	U-profil	
4	1	438590301	Bracket	Fäste	
5	1	471960801	Out of balance switch	Obalansbrytare	
6	2	724129901	Screw	Skruv	M4X30
7	2	734113601	Washer	Bricka	BRB 4,3X9
8	2	732211201	Locking nut	Låsmutter	M4
9	1	438730009	Cable set	Ledningssats	
10	2	725236661	Screw	Skruv	M6SF 6X12
11	2	471850205	Washer	Bricka	NB 6x22
12	2	732211601	Locking nut	Låsmutter	M6
13	2	725236661	Screw	Skruv	M6SF 6X12
14					Not used

info@zipnasklade.ru
8(800)500-69-51

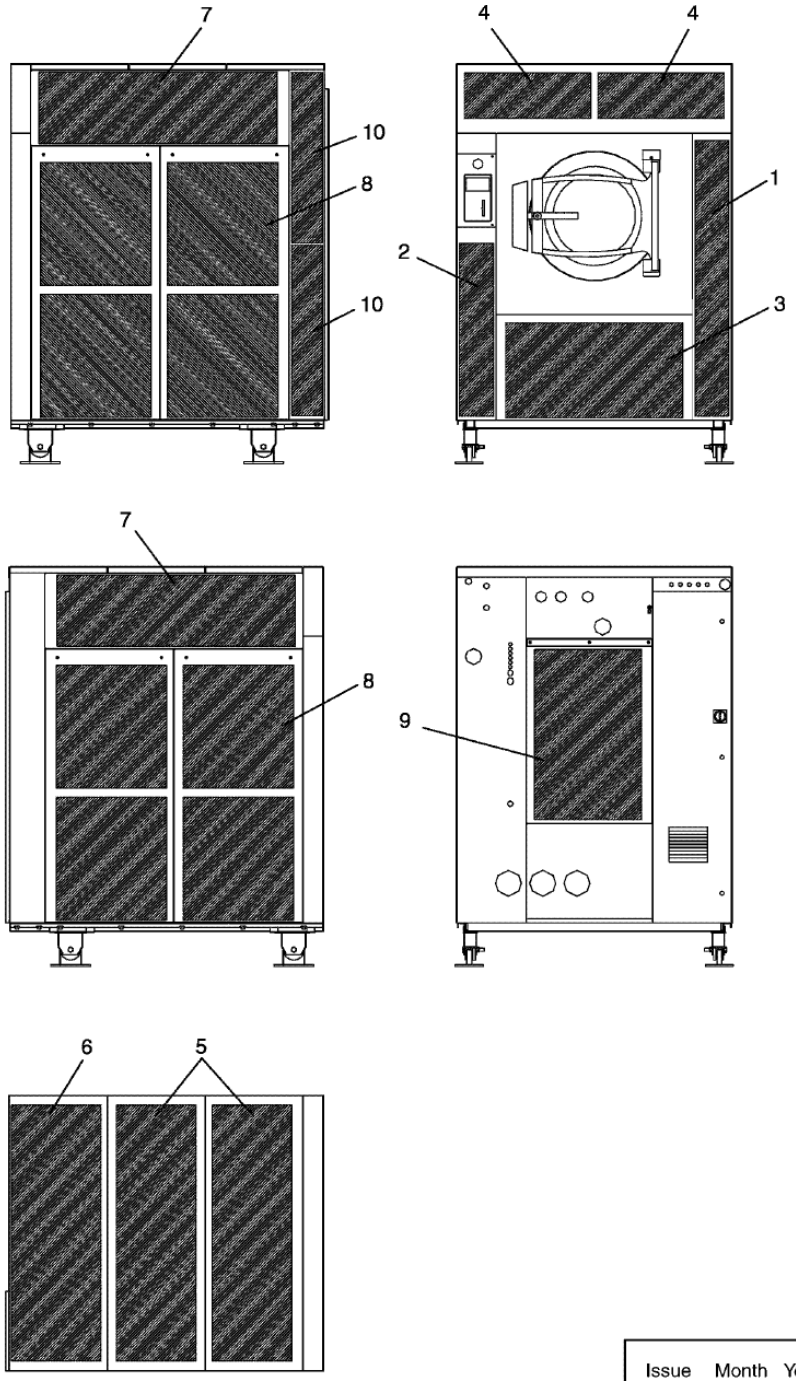

Issue	Month	Year
02	12	08

102404

W4600H
Sound insulation
Ljudisolering

Illustration Illustration	Issue Utgåva	Month Månad	
102404/1	**2**	**11**	**2008**

Pos	Qty	Part.no	Description	Beskrivning	Notes
1	1	471753540	Shock absorber mat	Dämpmatta	
2	1	471753541	Shock absorber mat	Dämpmatta	
3	1	471753542	Shock absorber mat	Dämpmatta	
4	2	471753543	Shock absorber mat	Dämpmatta	
5	2	471753544	Shock absorber mat	Dämpmatta	
6	1	471753545	Shock absorber mat	Dämpmatta	
7	2	471753546	Shock absorber mat	Dämpmatta	
8	8	471753547	Shock absorber mat	Dämpmatta	
9	1	471753548	Shock absorber mat	Dämpmatta	
10	2	471753549	Shock absorber mat	Dämpmatta	

info@zipnasklade.ru
8(800)500-69-51

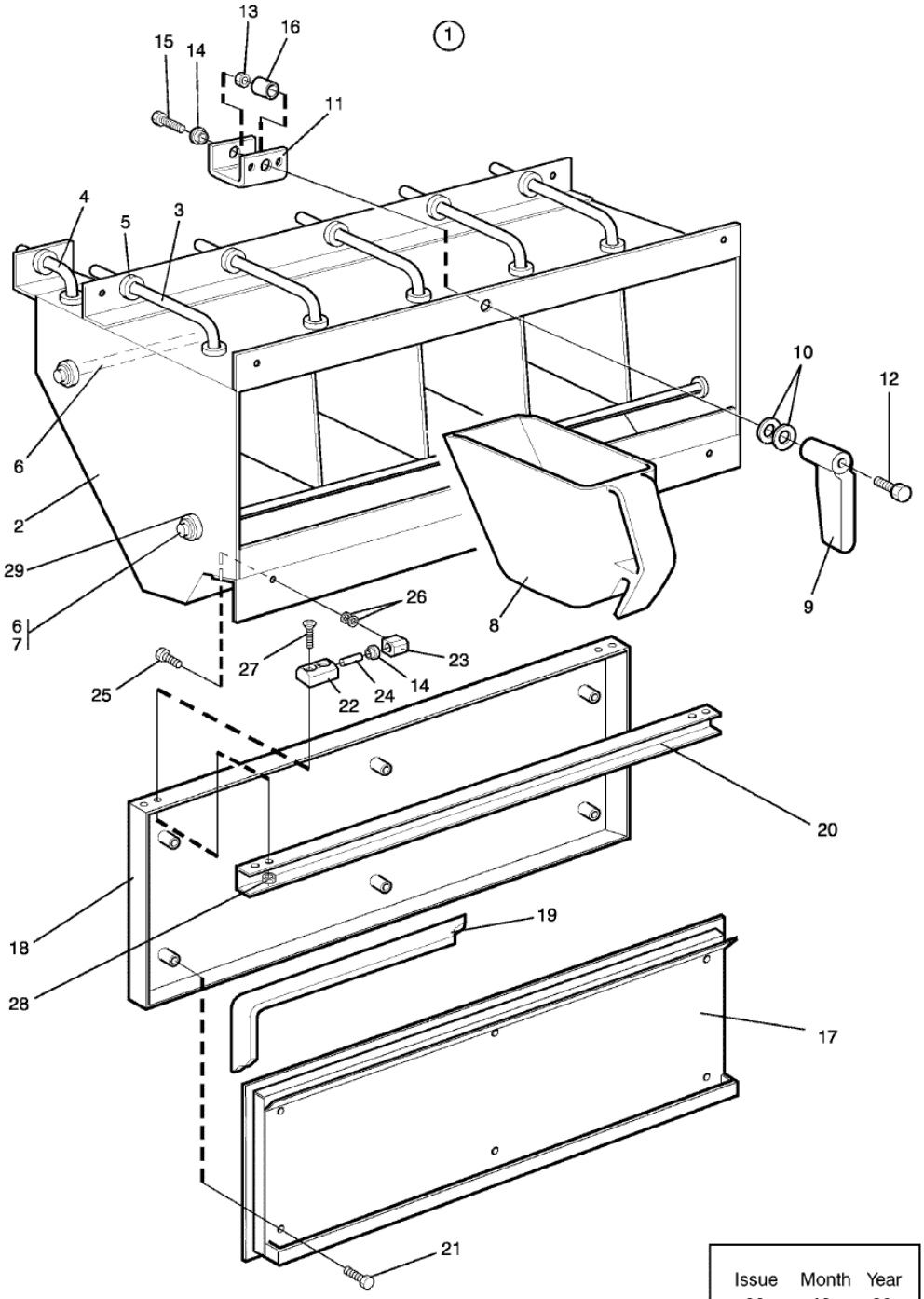

Issue	Month	Year
03	12	08

101452

W4600H
Dispensing components
Doseringsutrustning

Illustration Illustration	Issue Utgåva	Month Månad	
101452/2	**4**	**6**	**2012**

Pos	Qty	Part.no	Description	Beskrivning	Notes
1	1	472725604	Detergent container	Tvättmedelsbehållare	Complete
2	1	472726003	• *Detergent container*	• *Tvättmedelsbehållare*	
3	5	432005402	• *Pipe*	• *Rör*	
4	1	432005401	• *Elbow*	• *Böj*	
5	12	471816401	• *Grommet*	• *Genomföring*	
6	2	472634601	• *Support*	• *Stöd*	
7	4	735585200	• *Washer*	• *Bricka*	
8	5	472637401	• *Cup*	• *Skopa*	
9	1	472602801	• *Handle*	• *Handtag*	
10	2	734117809	• *Washer*	• *Bricka*	BRB 13X24
11	1	471421002	• *Clamp*	• *Bygel*	
12	1	725534001	• *Screw*	• *Skruv*	M5X45
13	1	731231401	• *Nut*	• *Mutter*	M5
14	3	471857702	• *Bushing*	• *Bussning*	
15	1	471834428	• *Screw*	• *Skruv*	M5X30
16	1	472602901	• *Shaft*	• *Axel*	
17	1	432047701	• *Door*	• *Lucka*	
18	1	472636305	• *Cover*	• *Lock*	
19	1	471817401	• *Strip*	• *List*	
20	1	432047601	• *U-section*	• *U-profil*	
21	6	471832301	• *Screw*	• *Skruv*	M6X12
22	2	472639702	• *Bracket*	• *Fäste*	
23	2	472639601	Bracket	Fäste	
24	2	720130706	Pin	Pinne	
25	2	725232742	• *Screw*	• *Skruv*	M5X12
26	10	734115309	• *Washer*	• *Bricka*	BRB 6,4X12
27	4	471834817	• *Screw*	• *Skruv*	M4X20
28	4	732211242	• *Locking nut*	• *Låsmutter*	M4
29	4	471816400	• *Grommet*	• *Genomföring*	D7

info@zipnasklade.ru
8(800)500-69-51

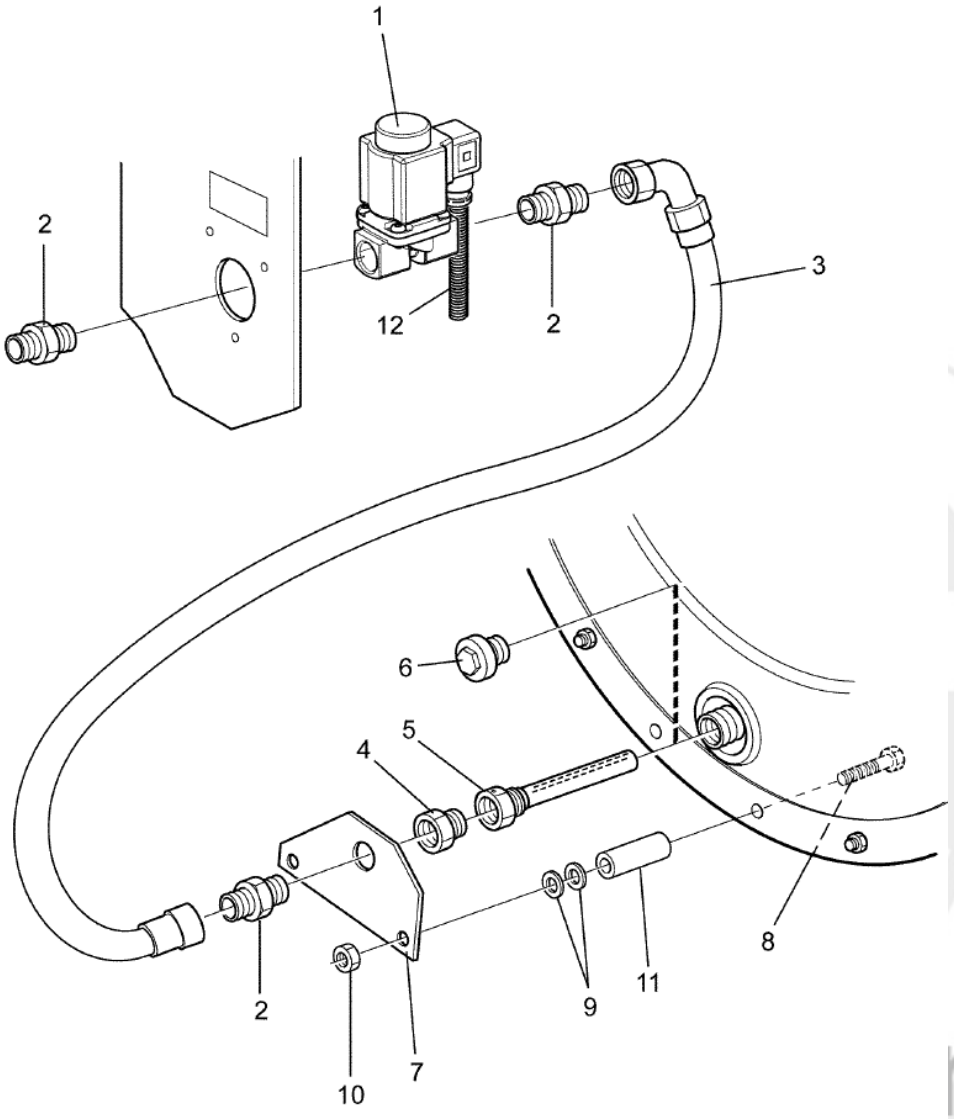

102407_03

W4600H
Steam components
Ångdetaljer

Illustration Illustration	Issue Utgåva	Month Månad	
102407/1	**3**	**9**	**2017**

Pos	Qty	Part.no	Description	Beskrivning	Notes
1	1	472992032	Valve	Ventil	Kit
1	1	471827909	• *Repair kit*	• *Reparationsats*	
1	1	471823214	Valve	Ventil	Air controlled
2	3	471921938	Nipple	Nippel	3/4''
3	1	471812623	Hose	Slang	
4	1	471860406	Bushing	Bussning	
5	1	432047301	Steam injector	Ånginjektor	
6	1	741511524	Plug	Propp	3/4''
7	1	432046402	Support	Stöd	
8	2	725250381	Screw	Skruv	M10x60
9	4	734117301	Washer	Bricka	BRB 10,5X21
10	2	471840905	Locking nut	Låsmutter	M10
11	2	432046503	Spacer	Distans	
12	1	438730285	Cable set	Ledningssats	

info@zipnasklade.ru
8(800)500-69-51

1

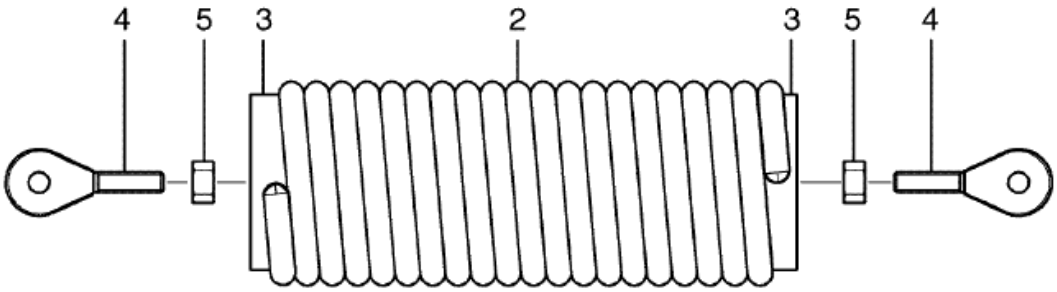

Issue	Month	Year
01	**11**	**06**

102409

W4600H
Suspension unit
Fjäderenhet

Illustration Illustration	Issue Utgåva	Month Månad	
102409/1	**1**	**11**	**2006**

Pos	Qty	Part.no	Description	Beskrivning	Notes
1	1	438580002	Suspension unit	Fjäderenhet	COMPL.
2	1	471788202	• *Spring*	• *Fjäder*	Complete
3	2	432030902	• *Support*	• *Stöd*	
4	2	471830701	• *Link head*	• *Länkhuvud*	
5	2	731232201	• *Nut*	• *Mutter*	M12

info@zipnasklade.ru
8(800)500-69-51

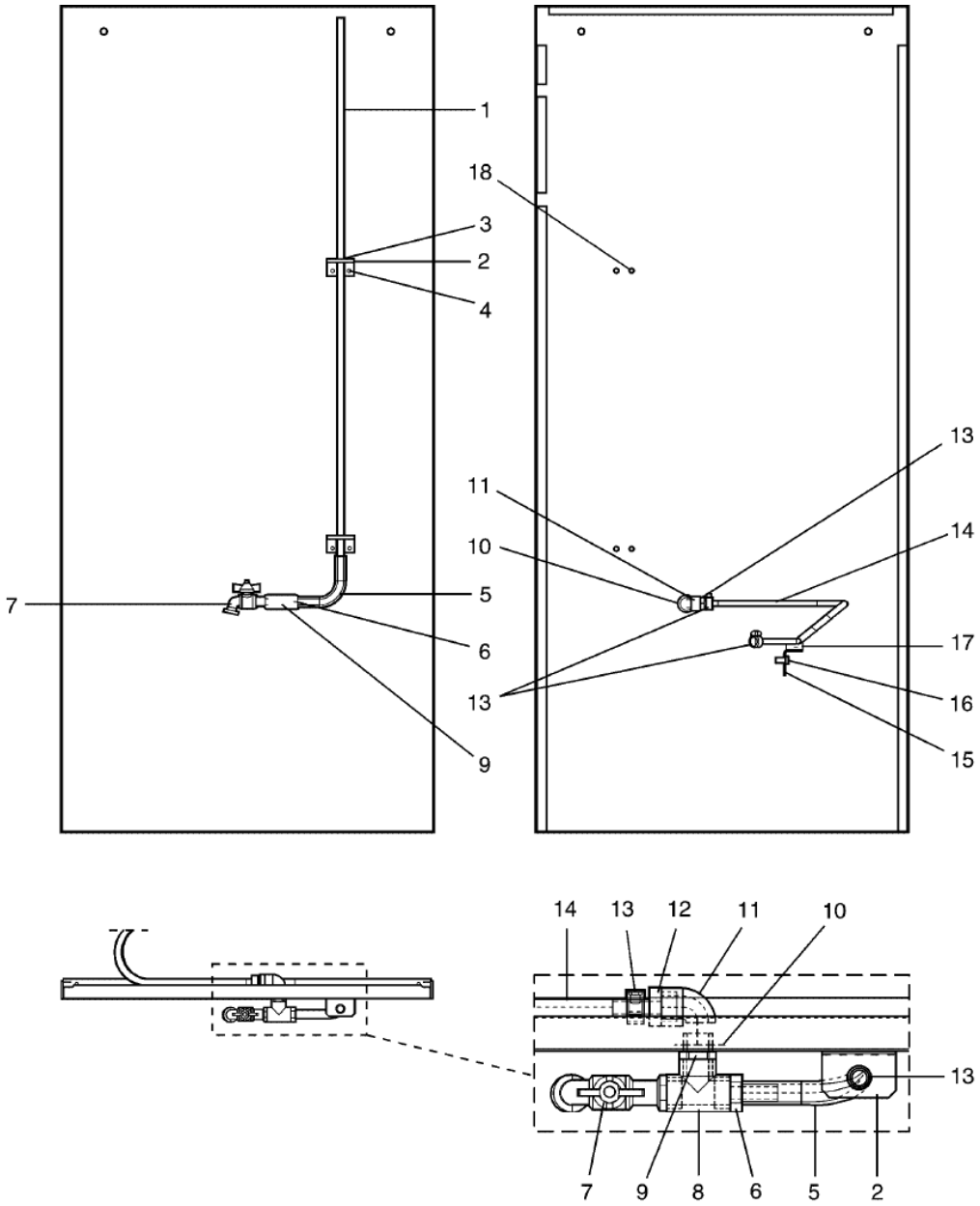

Issue	Month	Year
01	11	06

102410

W4600H
Level tube and test tap
Nivårör och provtagningskran

Illustration	Issue	Month	
Illustration	Utgåva	Månad	
102410/1	**2**	**11**	**2008**

Pos	Qty	Part.no	Description	Beskrivning	Notes
1	1	471866504	Glass gauge	Nivårör	
2	2	471284101	Bracket	Fäste	
3	2	471816401	Grommet	Genomföring	
4	4	471834413	Screw	Skruv	M4X10
5	1	471814015	Hose	Slang	L=140
6	1	471868206	Hose nipple	Slangnippel	
7	1	471823801	Tap	Kran	
8	1	742511324	T-pipe	T-rör	
9	1	741311322	Nipple	Nippel	
10	1	471815906	Gasket	Packning	
11	1	742111324	Elbow pipe	Vinkelrör	
12	1	471868206	Hose nipple	Slangnippel	
13	2	736281651	Hose clamp	Slangklämma	Ø13-19
14	1	471814016	Hose	Slang	L=950
15	1	432036902	Mounting plate	Fästplåt	
16	2	725236661	Screw	Skruv	M6SF 6X12
17	3	471787701	Cable tie	Buntband	
18	4	732211201	Locking nut	Låsmutter	M4

info@zipnasklade.ru
8(800)500-69-51

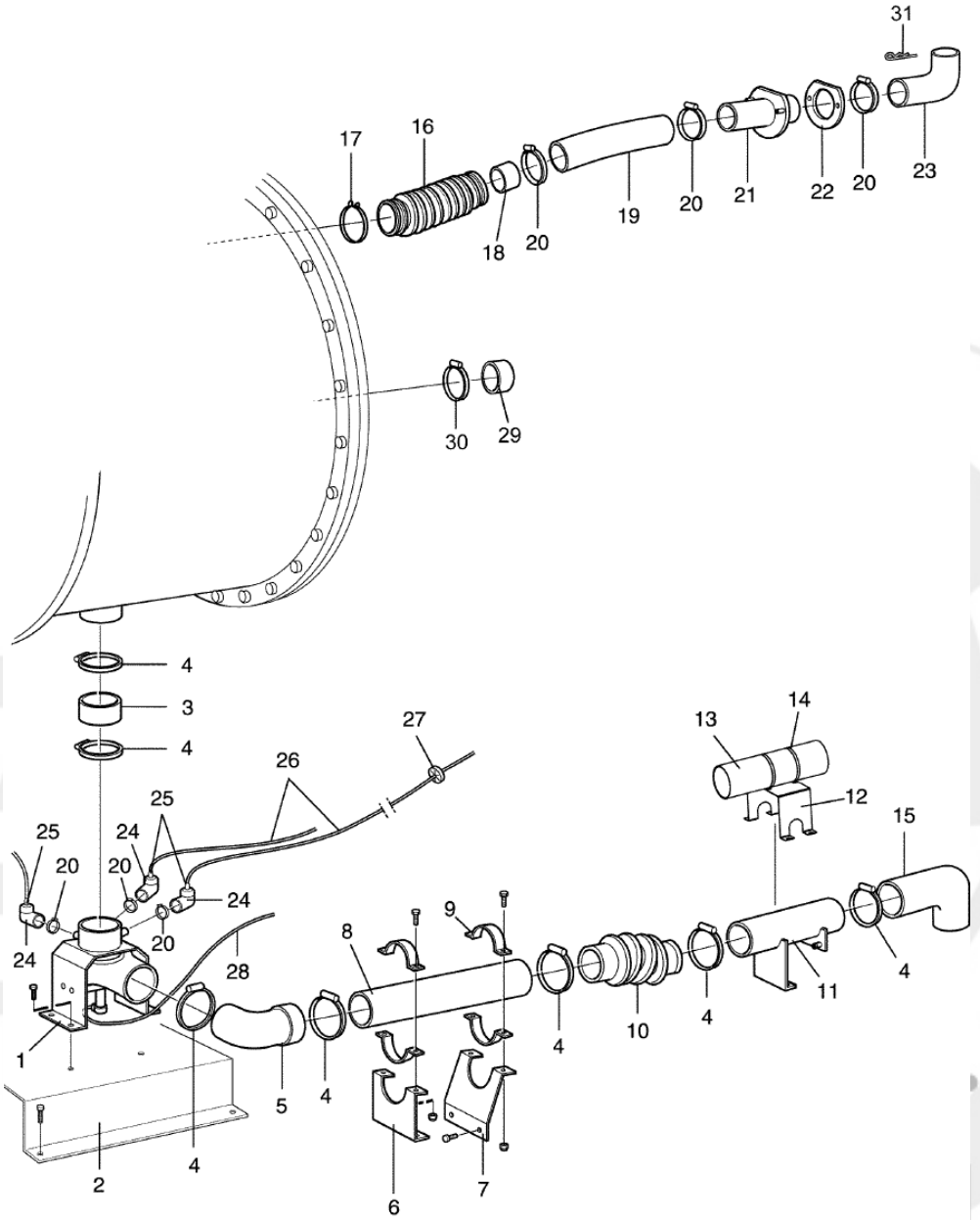

Issue	Month	Year
03	**06**	**10**

102357

W4600H
Drain and hoses
Avlopp och slangar

Illustration Illustration	Issue Utgåva	Month Månad	
102357/2	**5**	**10**	**2010**

Pos	Qty	Part.no	Description	Beskrivning	Notes
1	1	438498201	Drain valve	Avloppsventil	
2	1	438583801	Bracket	Hållare	
3	1	471812855	Hose	Slang	
4	6	736285251	Hose clamp	Slangklämma	Ø93-110
5	1	471861002	Tube	Rör	
6	1	432003202	Bracket	Hållare	
7	1	432003201	Bracket	Hållare	
8	1	471861312	Drain pipe	Avloppsrör	
9	2	471785502	Clamp	Klämma	
10	1	438497201	Hose	Slang	
11	1	438589601	Drain	Avlopp	-980/001139
12	1	438620701	Bracket	Fäste	980/001140-
13	1	471861313	Pipe	Rör	980/001140-
14	2	736285251	Hose clamp	Slangklämma	Ø93-110 980/001140-
15	1	432004701	Hose	Slang	
16	1	472602500	Hose	Slang	
17	1	472602400	Ring	Ring	
18	1	471861305	Tube	Rör	Ø50, L=80
19	1	432251701	Hose	Slang	
20	7	736284051	Hose clamp	Slangklämma	Ø50-63
21	1	432251002	Joint piece	Skarvstycke	
22	1	438815701	Gasket	Packning	
23	1	472720601	Hose	Slang	
24	3	471209532	Air chamber	Luftdosa	
25	3	471240152	Nipple	Nippel	
26	3	471811806	Hose	Slang	L=1900
27	3	471816400	Grommet	Genomföring	D7
28	1	438810202	Hose	Slang	L=2700
29	1	472908701	Hood	Huv	

info@zipnasklade.ru
8(800)500-69-51

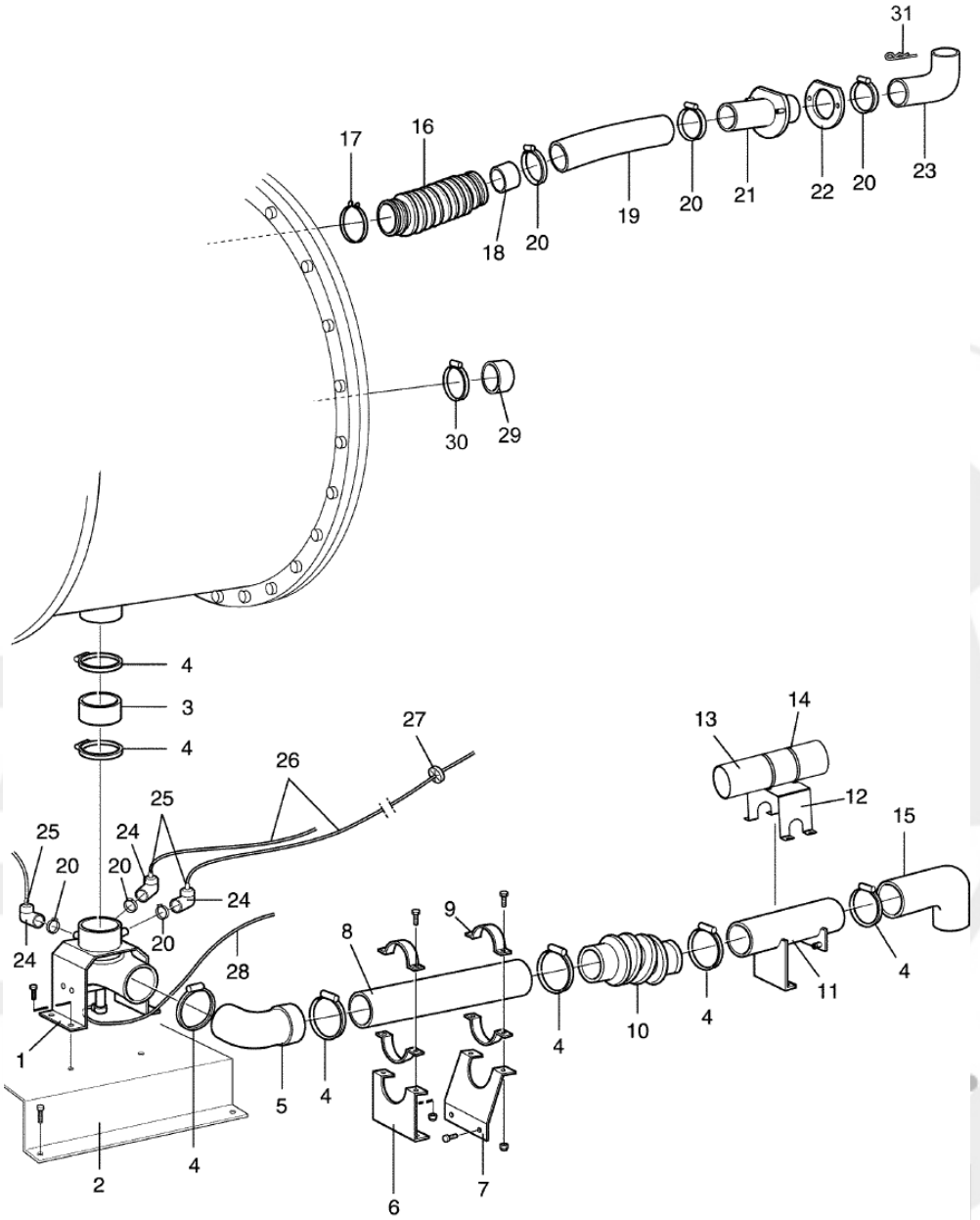

Issue	Month	Year
03	**06**	**10**

102357

Pos	Qty	Part.no	Description	Beskrivning	Notes
30	1	736284951	Hose clamp	Slangklämma	Ø77-93
31	1	471786701	Pin	Sprint	

info@zipnasklade.ru
8(800)500-69-51

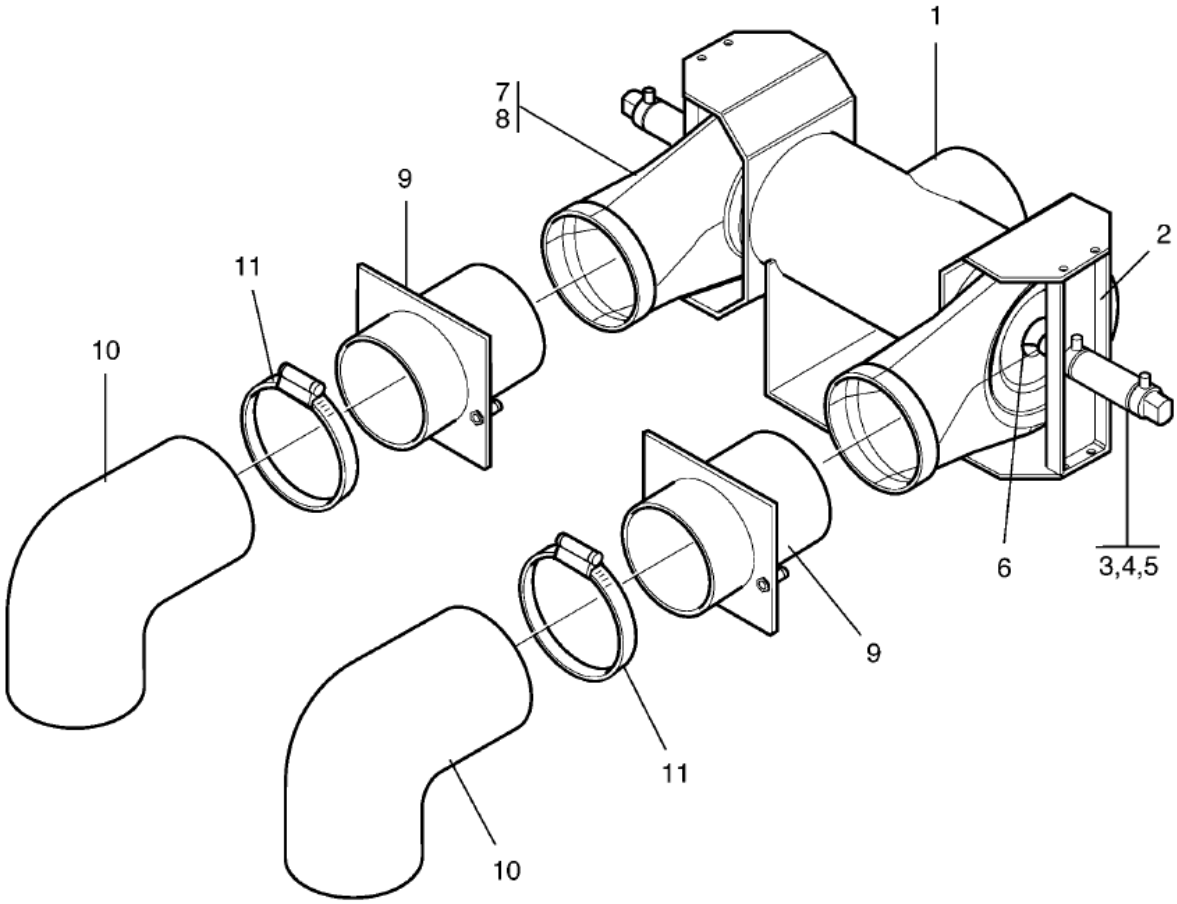

Issue	Month	Year
01	03	04

102213

W4600H
Drain valve and hoses, water recovery
Avloppsventil och slangar,återvinning

Illustration Illustration	Issue Utgåva	Month Månad	
102213/1	**3**	**4**	**2010**

Pos	Qty	Part.no	Description	Beskrivning	Notes
1	1	432048403	Connection	Anslutning	
2	2	438496101	Bracket	Brygga	
3	2	471828101	Air cylinder	Luftcylinder	
4					Not used
5	2	732211801	Locking nut	Låsmutter	M8
6	2	438492401	Pressure plate	Tryckplatta	
7	2	438492101	Hose	Slang	
8	4	736285551	Hose clamp	Slangklämma	Ø138
9	2	438590801	Drain pipe connection	Avloppsstos	
10	1	432004701	Hose	Slang	
11	1	736285251	Hose clamp	Slangklämma	Ø93-110

info@zipnasklade.ru
8(800)500-69-51

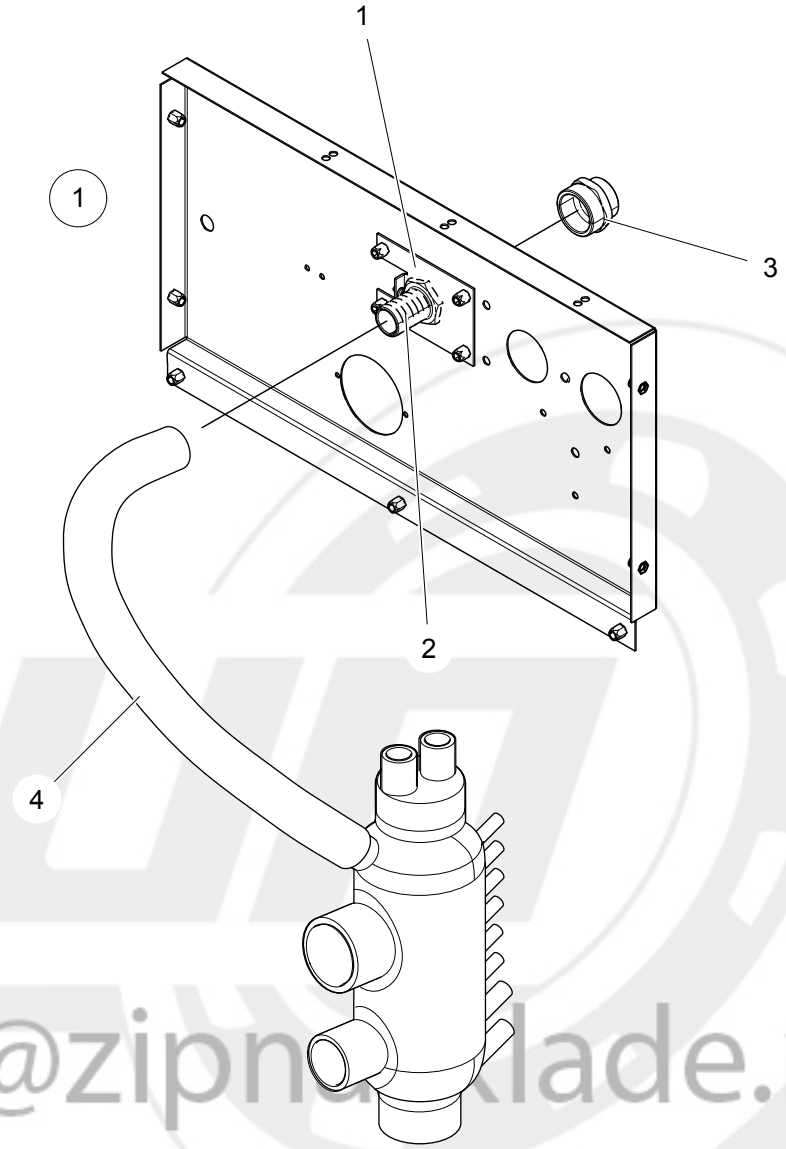

info@zipnaklade.ru
8(800)500-69-51

102413_02

W4600H
Water recovery system
Vattenåtervinning

Illustration Illustration	Issue Utgåva	Month Månad	
102413/2	**1**	**9**	**2017**

Pos	Qty	Part.no	Description	Beskrivning	Notes
1	1	472991226	Kit for water recovery system	Kit för vattenåtervinning	-980/002295
	1	438588102	• *Mounting plate*	• *Fästplåt*	
	1	472637502	• *Hose nipple*	• *Slangnippel*	1 1/4''
	1	471860410	• *Adapter*	• *Adapter*	
1	1	438591201	Mounting plate	Fästplåt	-980/002295
1	1	438588102	Mounting plate	Fästplåt	980/002296-
2	1	472637502	Hose nipple	Slangnippel	1 1/4'' 980/002296-
3	1	471860410	Adapter	Adapter	980/002296-
4	1	432517702	Hose	Slang	

info@zipnasklade.ru
8(800)500-69-51

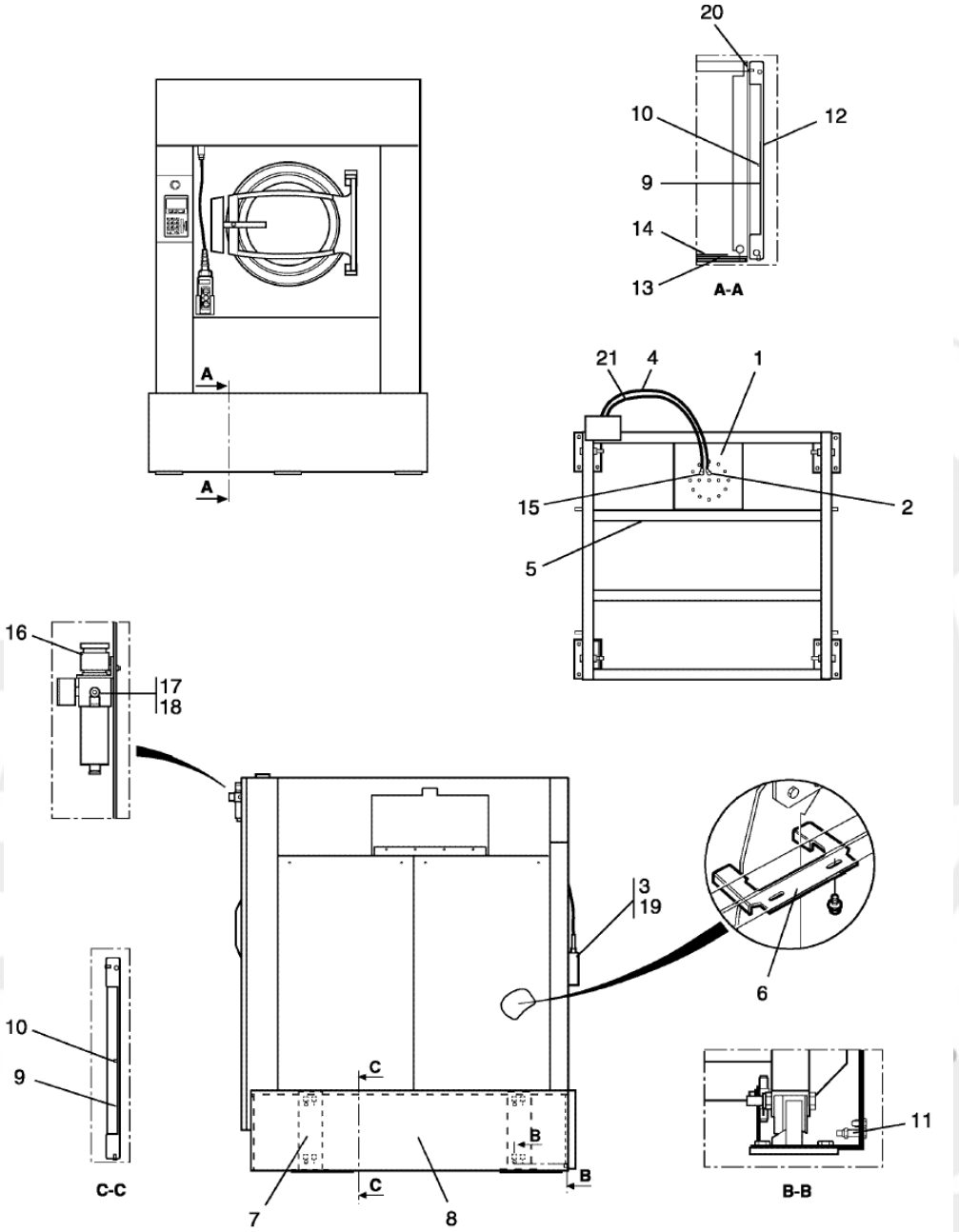

Issue	Month	Year
01	06	06

102374

W4600H
Tilt, forward
Tippning framåt

Illustration Illustration	Issue Utgåva	Month Månad	
102374/1	**3**	**8**	**2010**

Pos	Qty	Part.no	Description	Beskrivning	Notes
1	1	471827103	Air bellows	Luftbälg	COMPL.
2	1	471869021	Angle connector	Vinkelkoppling	8/6
3	1	471879601	Control for tilting	Manöverdon	Complete 3-button
4	Rq	471814390	Hose	Slang	8/6
4	Rq	438810200	Hose	Slang	6/4
5	1	472728602	Beam	Balk	
6	2	432039102	Tilt protection	Tippskydd	
7	4	432006201	Pillar	Stolpe	
7	8	471785704	Clips	Klips	M8
8	2	432509701	Side cover	Sidoskydd	
9	3	432011401	Plate	Plåt	
10	9	471864101	Plug	Plugg	
11	2	472920901	Pin	Tapp	
12	1	438590501	Front panel	Frontplåt	
13	4	472921402	Plate	Plåt	
14	6	432044701	Plate	Plåt	
15	1	471869022	Insert	Passdel	
16	1	471828301	Regulator	Regulator	
17	2	471869021	Angle connector	Vinkelkoppling	8/6
18	2	741410220	Bushing	Bussning	
19	1	432017801	Bracket	Hållare	
20	2	471819601	Plug	Plugg	
21	Rq	438810200	Hose	Slang	6/4

info@zipnasklade.ru
8(800)500-69-51

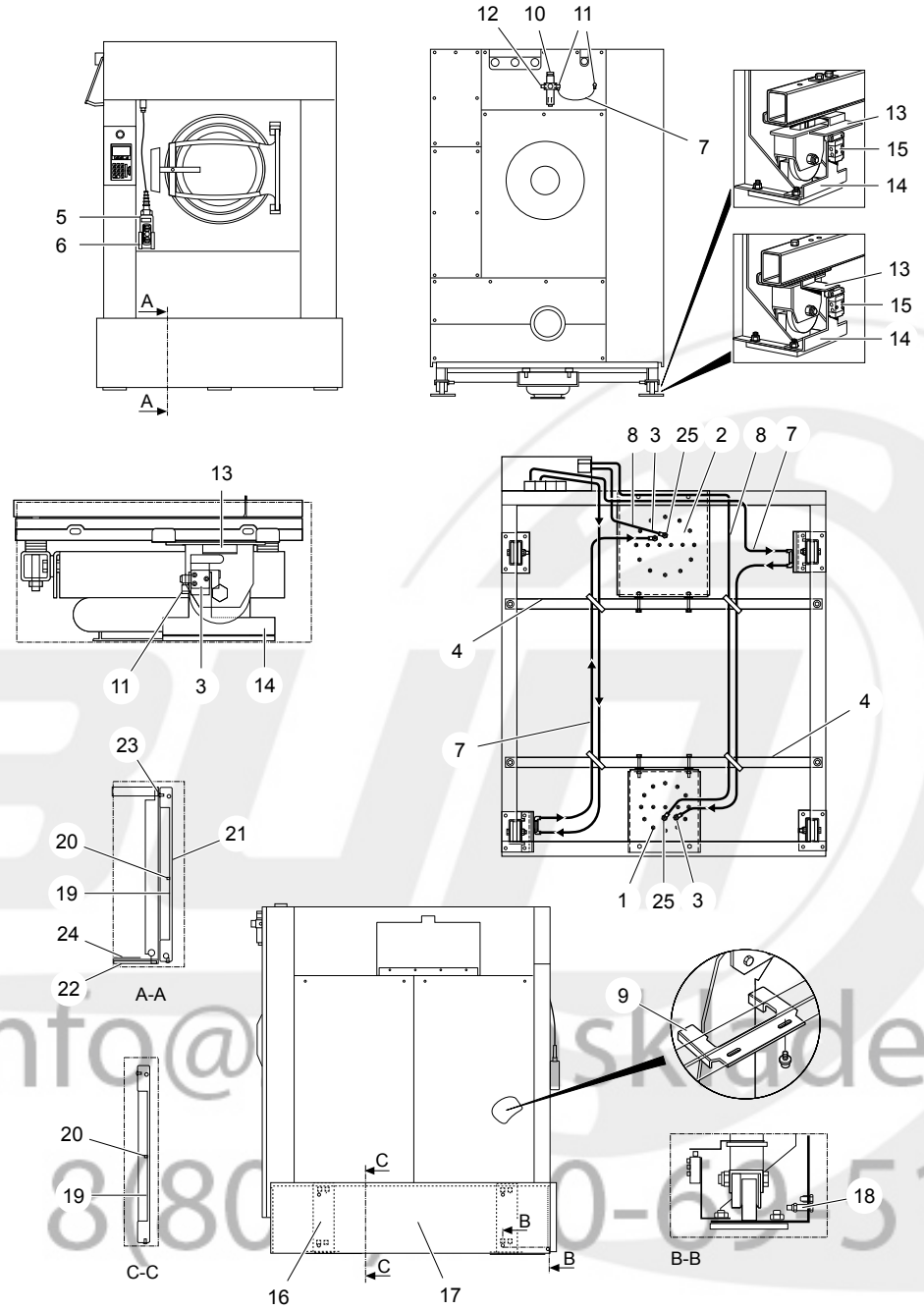

102375_03

info@ skladе.ru
8(80 0-69-51

W4600H
Tilt, forward and forward/backward
Tippning,framåt och framåt/bakåt

Illustration	Issue	Month	
Illustration	Utgåva	Månad	
102375/3	**3**	**11**	**2016**

Pos	Qty	Part.no	Description	Beskrivning	Notes
1	1	471827103	Air bellows	Luftbälg	COMPL.
2	1	471827103	Air bellows	Luftbälg	COMPL.
3	2	471869022	Insert	Passdel	
4	2	472728602	Beam	Balk	
5	1	471879601	Control for tilting	Manöverdon	3-button
6	1	432017801	Bracket	Hållare	
7	Rq	471814390	Hose	Slang	8/6
8	Rq	438810200	Hose	Slang	6/4
9	2	432039102	Tilt protection	Tippskydd	
10	1	471828301	Regulator	Regulator	
11	3	471869021	Angle connector	Vinkelkoppling	8/6
12	2	741410220	Bushing	Bussning	
13	2	438580202	Protection	Skydd	With scale
13	2	438580201	Protection	Skydd	Without scale
14	2	438580101	Bracket	Hållare	
15	2	471828801	Valve	Ventil	
16	4	432006201	Pillar	Stolpe	
17	2	432509701	Side cover	Sidoskydd	
18	1	472920901	Pin	Tapp	
19	3	432011401	Plate	Plåt	
20	9	471864101	Plug	Plugg	
21	1	438590501	Front panel	Frontplåt	
22	4	472921402	Plate	Plåt	
23	2	471819601	Plug	Plugg	
24	6	432044701	Plate	Plåt	
25	2	471869021	Angle connector	Vinkelkoppling	8/6

info@zipnasklade.ru
8(800)500-69-51

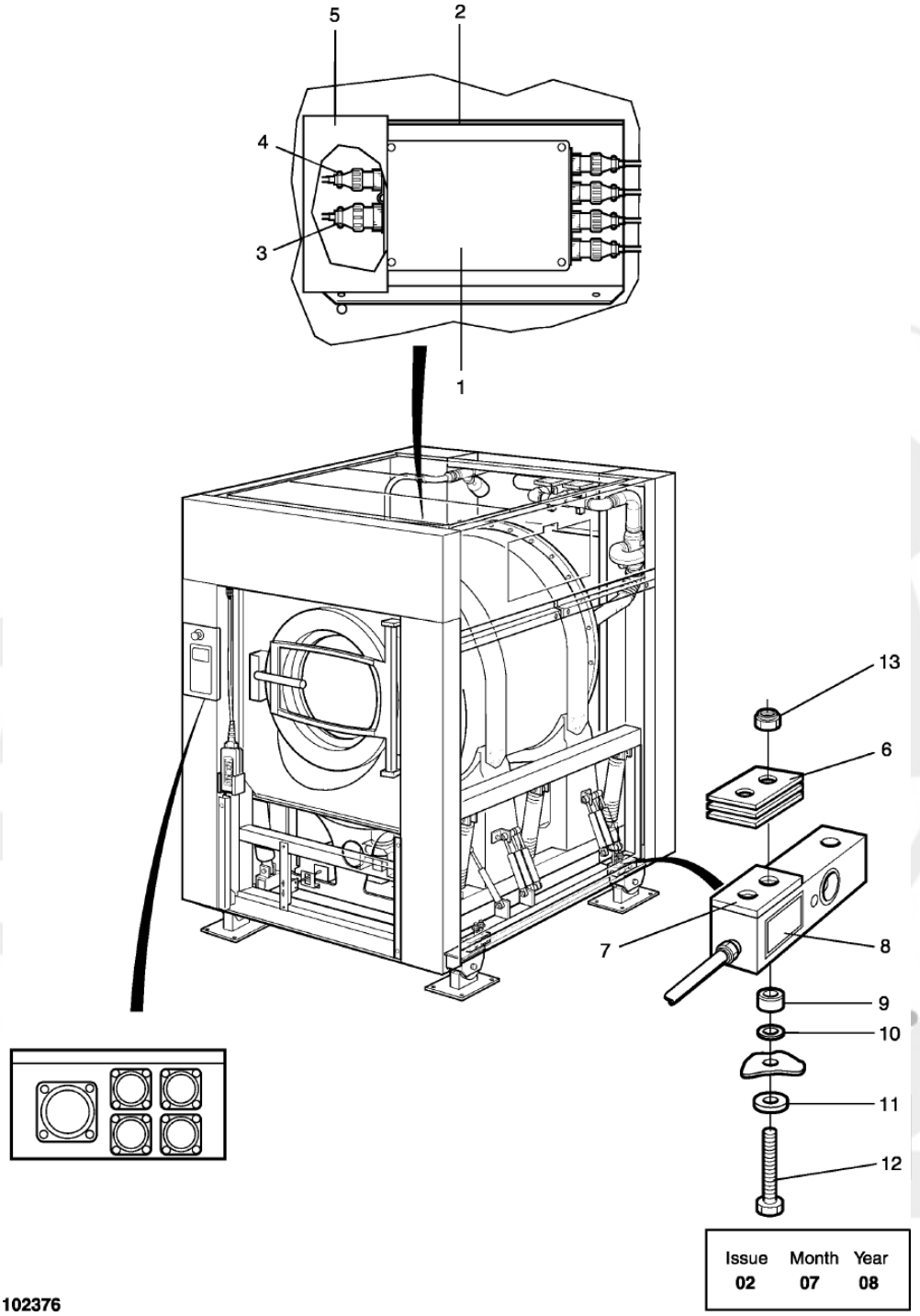
5
2
4
3
1
13
6
7
8
9
10
11
12
Issue 02
Month 07
Year 08
102376

W4600H
Weighing device
Vågenhet
-980/0001127

Illustration Illustration	Issue Utgåva	Month Månad	
102376/1	**1**	**3**	**2017**

Pos	Qty	Part.no	Description	Beskrivning	Notes
1	1	471883094	Weighing device	Vågenhet	RS 232 interface
1	1	471883095	Weighing device	Vågenhet	4-20mA interface
2	1	432038302	Mounting plate	Fästplåt	
3	1	471882222	Cable	Kabel	Signal
4	1	471882224	Cable	Kabel	Voltage
6	12	432049301	Washer	Bricka	
7	Rq	*			Not used
8	4	471882212	Load cell	Lastcell	With cablage
9	4	471882591	Spacer	Distans	
10	4	734117801	Washer	Bricka	BRB 13X24
11	4	471907359	Washer	Bricka	Not used TBRSB 13X36
12	4	725254051	Screw	Skruv	M6
13	8	732212201	Locking nut	Låsmutter	M12

info@zipnasklade.ru
8(800)500-69-51

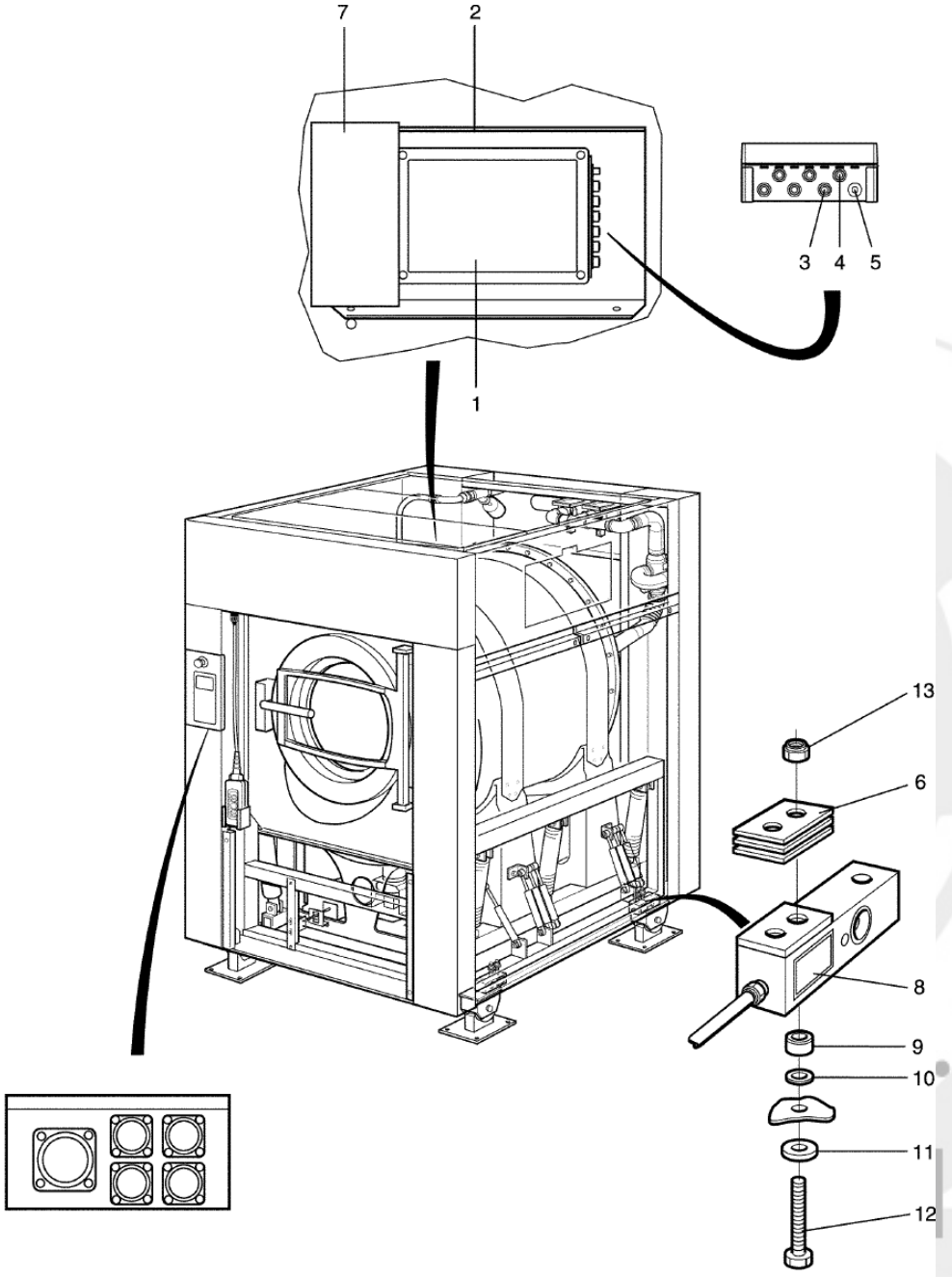

Issue	Month	Year
01	04	12

500327

W4600H
Weighing device
Vågenhet
980/0001128-

Illustration Illustration	Issue Utgåva	Month Månad	
500327/0	**1**	**3**	**2017**

Pos	Qty	Part.no	Description	Beskrivning	Notes
1	1	471883002	Weighing device	Vågenhet	
2	1	432038302	Mounting plate	Fästplåt	
3	1	471883032	Cable	Kabel	Signal RS232 980/001128-001287
3	1	471883039	Cable	Kabel	Signal RS232 980/001288-
4	1	471883034	Cable	Kabel	Signal 4-20mA
5	1	471883022	Cable	Kabel	Voltage
6	12	432049301	Washer	Bricka	
7	Rq	*			Not used
8	4	471883012	Load cell	Lastcell	With cablage
9	4	471882591	Spacer	Distans	
10	4	734117801	Washer	Bricka	BRB 13X24
11	4	471907359	Washer	Bricka	Not used TBRSB 13X36
12	4	725254051	Screw	Skruv	M6
13	8	732212201	Locking nut	Låsmutter	M12

info@zipnasklade.ru
8(800)500-69-51

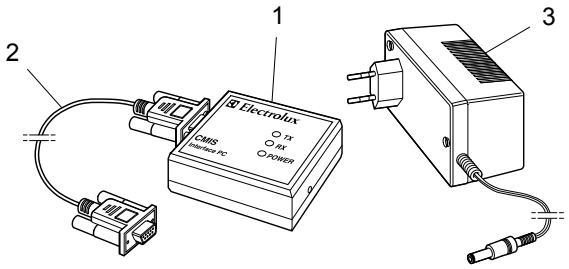

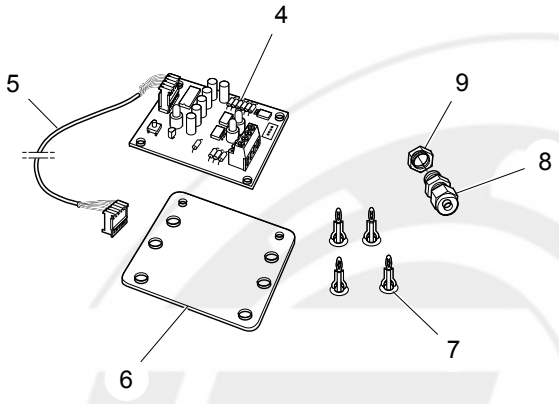

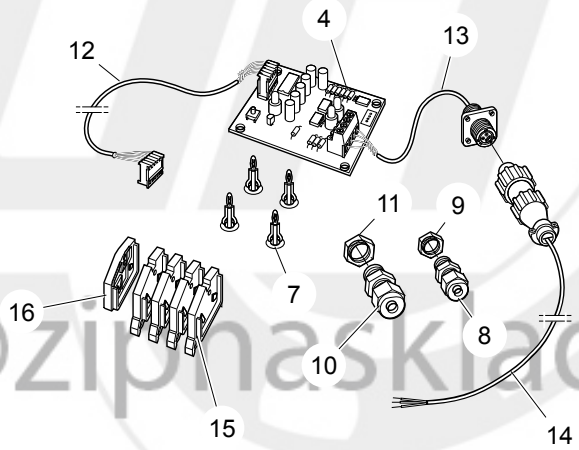

info@zipnasklade.ru
8(800)500-69-51

102107_01

W4600H
CMIS
CMIS
-980/001571

Illustration	Issue	Month	
Illustration	Utgåva	Månad	
102107/1	**1**	**11**	**2016**

Pos	Qty	Part.no	Description	Beskrivning	Notes
1	1	438879601	Interface PC	Interface PC	Complete
2	1	438879301	Cable	Kabel	Complete
3	1	471968001	Battery eliminator	Batterieliminator	24V
4	1	438879101	CMIS Interface	CMIS Interface	
7	4	471795802	Spacer element	Distansstycke	
10	1	487028900	Screw fitting	Förskruvning	M16
11	1	487028908	Nut	Mutter	M16
12	1	432293302	Cable set	Ledningssats	
13	1	438730087	Cable set	Ledningssats	
14	1	438730088	Cable set	Ledningssats	
15	4	438876201	Block	Plint	
16	1	438876211	Block	Plint	

info@zipnasklade.ru
8(800)500-69-51

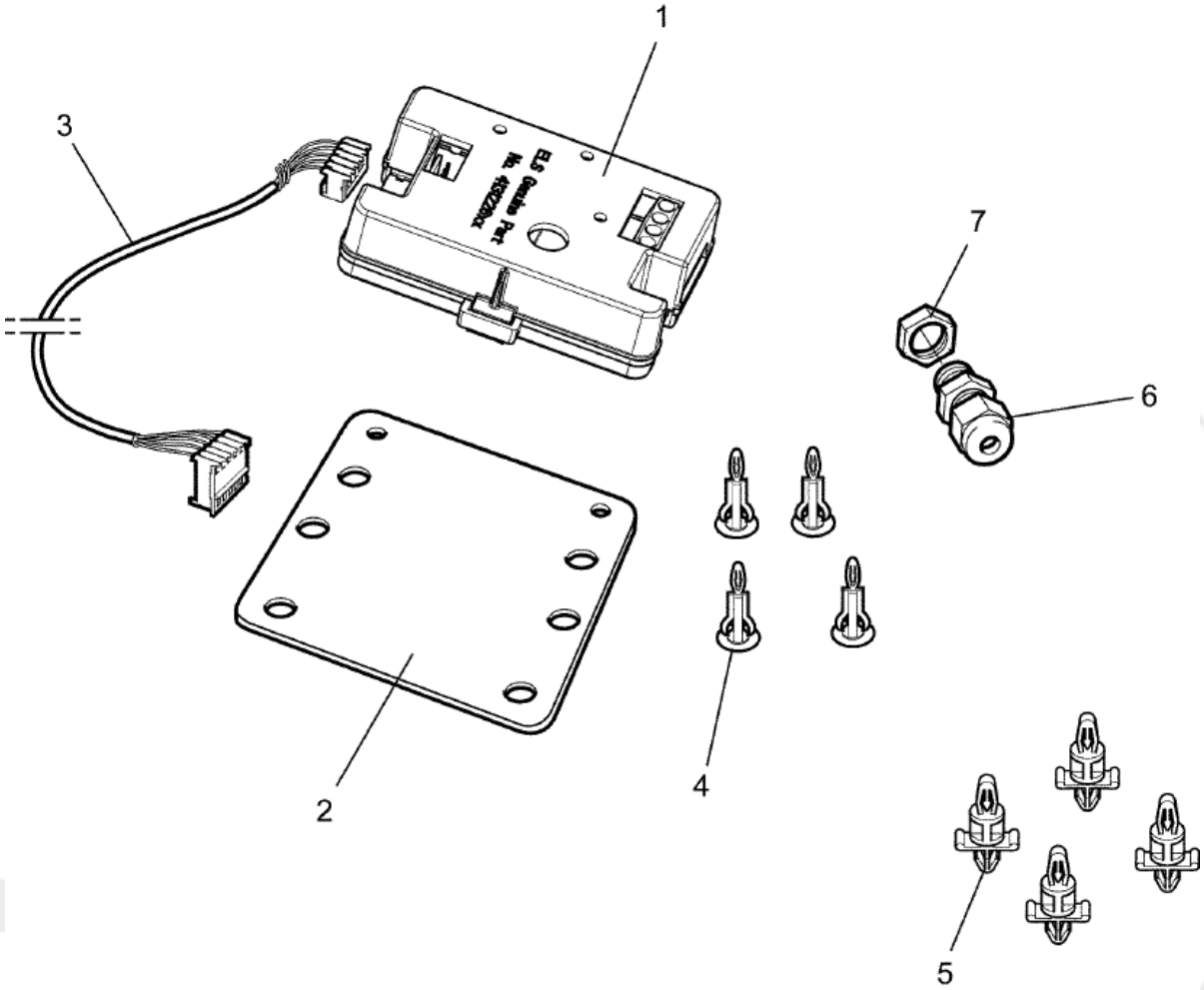

500503_01

Pos	Qty	Part.no	Description	Beskrivning	Notes
1	1	413122601	Printed circuit board	Kretskort	ELS Network interface
2	1	471460101	Bracket	Konsol	
3	1	432293302	Cable set	Ledningssats	
4	4	471795802	Spacer element	Distansstycke	
5	4	471796002	Support	Stöd	
6	2	487028900	Screw fitting	Förskruvning	M16
7	2	487028908	Nut	Mutter	M16

info@zipnasklade.ru
8(800)500-69-51

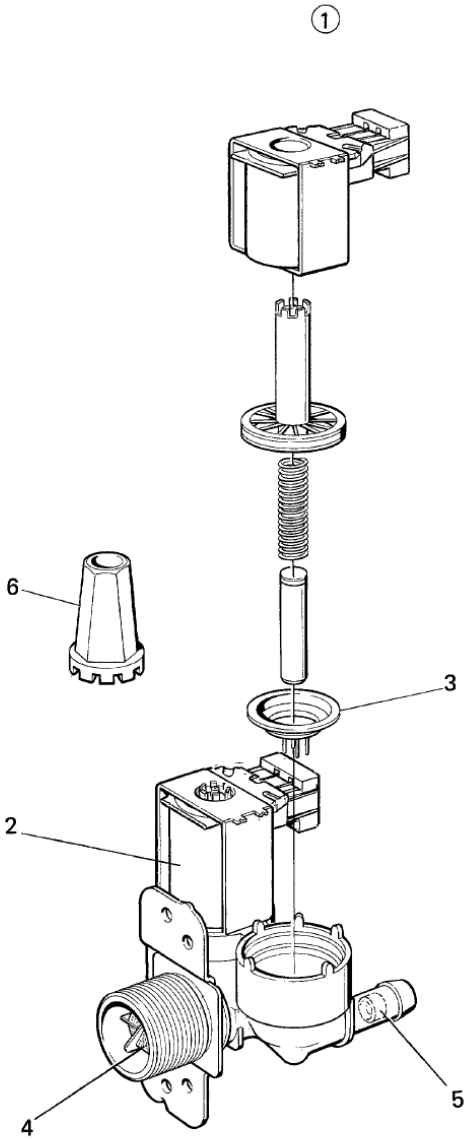

Issue	Month	Year
01	12	89

100798

W4600H
Inlet valve 3/4", 2-way
Tilloppsventil 3/4",2-vägs

Illustration Illustration	Issue Utgåva	Month Månad	
100798/1	**6**	**10**	**2002**

Pos	Qty	Part.no	Description	Beskrivning	Notes
1	1	471823551	Valve	Ventil	2-way, 208-240V 50/60Hz, BSP
1	1	471823554	Valve	Ventil	USA 2-way, 208-240V 60Hz, NH USA
1	1	471823557	Valve	Ventil	USA 2-way, 120V 60Hz, NH USA
1	1	471823559	Valve	Ventil	USA 2-way, 208-240V 50/60Hz, NH USA
1	1	471823558	Valve	Ventil	2-way, 208-240V 50/60Hz, BSP
1	1	471823560	Valve	Ventil	2-way, 208-240V 50/60Hz, BSP
1	1	471823562	Valve	Ventil	2-way, 208-240V 50/60Hz, BSP
2	1	471686015	• *Coil*	• *Spole*	120V Green
2	1	471686016	• *Coil*	• *Spole*	120V Orange
2	1	471686017	• *Coil*	• *Spole*	120V White
2	1	471686018	• *Coil*	• *Spole*	208-240V Green
2	1	471686019	• *Coil*	• *Spole*	208-240V Orange
2	1	471686020	• *Coil*	• *Spole*	208-240V White
3	1	471823498	• *Diaphragm*	• *Membran*	NITRIL
3	1	471823492	• *Diaphragm*	• *Membran*	EPDM
4	1	471823494	• *Filter*	• *Filter*	
5	1	471823495	• *Restrictor*	• *Strypbricka*	2,5l/min
5	1	471823496	• *Restrictor*	• *Strypbricka*	5,5l/min
6	1	471479201	Tool	Verktyg	

info@zipnasklade.ru
8(800)500-69-51

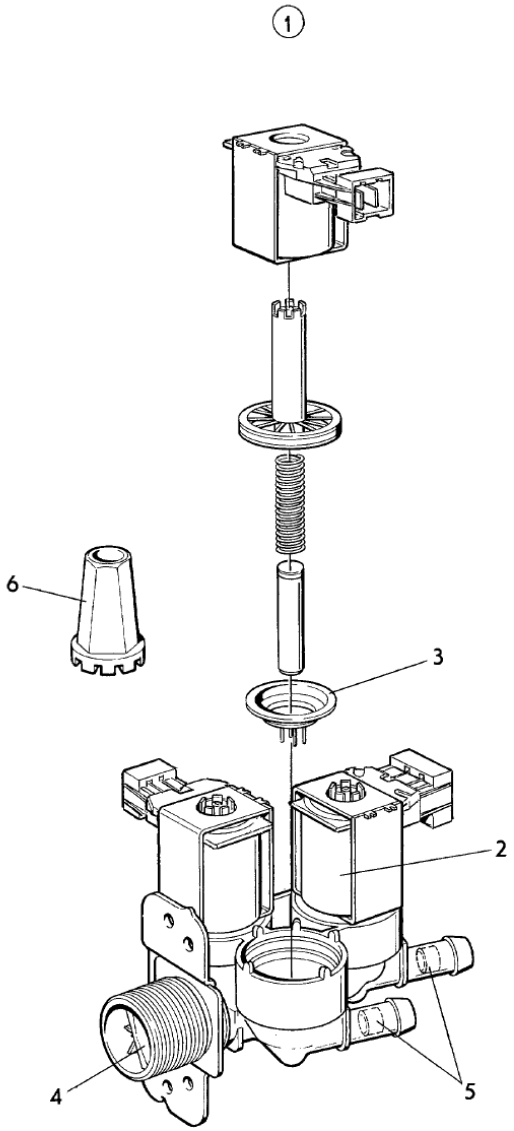

Issue	Month	Year
01	12	89

100797

W4600H
Inlet valve 3/4", 3-way
Tilloppsventil 3/4",3-vägs

Illustration Illustration	Issue Utgåva	Month Månad	
100797/1	**7**	**10**	**2002**

Pos	Qty	Part.no	Description	Beskrivning	Notes
1	1	471823652	Valve	Ventil	3-way, 208-240V 50/60Hz, BSP
1	1	471823656	Valve	Ventil	3-way, 208-240V 50/60Hz, BSP
1	1	471823660	Valve	Ventil	3-way, 208-240V 50/60Hz, BSP
1	1	471823662	Valve	Ventil	3-way, 208-240V 50/60Hz, BSP
1	1	471823664	Valve	Ventil	3-way, 208-240V 50/60Hz, BSP
1	1	471823657	Valve	Ventil	3-way, 208-240V 50/60Hz, BSP
1	1	471823668	Valve	Ventil	IN 20L/MIN,OUT 2,5L/MIN 3-way, 208-240V 50/60Hz, BSP
1	1	471823666	Valve	Ventil	3-way, 120V 60Hz, NH USA
1	1	471823665	Valve	Ventil	3-way, 208-240V 50/60Hz, NH USA
2	1	471686015	• *Coil*	• *Spole*	120V Green
2	1	471686016	• *Coil*	• *Spole*	120V Orange
2	1	471686017	• *Coil*	• *Spole*	120V White
2	1	471686018	• *Coil*	• *Spole*	208-240V Green
2	1	471686019	• *Coil*	• *Spole*	208-240V Orange
2	1	471686020	• *Coil*	• *Spole*	208-240V White
3	1	471823498	• *Diaphragm*	• *Membran*	NITRIL
3	1	471823492	• *Diaphragm*	• *Membran*	USA EPDM
4	1	471823494	• *Filter*	• *Filter*	
5	1	471823495	• *Restrictor*	• *Strypbricka*	2,5l/min
5	1	471823496	• *Restrictor*	• *Strypbricka*	5,5l/min
6	1	471479201	Tool	Verktyg	

info@zipnasklade.ru
8(800)500-69-51

Part.no/Part.no	Page/Sida	Part.no/Part.no	Page/Sida	Part.no/Part.no	Page/Sida	Part.no/Part.no	Page/Sida
	23	432030902	79	432517704	63	438586403	7
	23	432031302	55	432518801	61	438586404	7
	23	432031901	59	432680510	39	438586501	11
	27	432033901	57	438008301	65	438586602	9
	27	432036501	55	438029901	27	438586603	9
	27	432036502	55	438029901	33	438586801	25
	71	432036601	9	438029901	39	438586802	9
	87	432036701	25	438045801	19	438586803	9
1111	23	432036801	55	438045901	19	438586803	31
1111	29	432036902	81	438308270	29	438587002	7
1111	35	432037001	59	438454301	23	438587003	9
1111	41	432037402	15	438457801	13	438587004	7
1111	95	432037501	57	438483201	55	438587102	7
1111	97	432037801	57	438491203	9	438587104	7
413122601	101	432037902	9	438491206	9	438587105	7
413291001	43	432038101	59	438492101	67	438587107	7
413291002	43	432038302	95	438492101	87	438587108	7
413291003	45	432038302	97	438492401	67	438587202	9
413291004	45	432039102	91	438492401	87	438587203	9
413308206	33	432039102	93	438495103	67	438587204	9
413308206	39	432039202	71	438495104	67	438587302	9
413308301	33	432039702	15	438496101	67	438587303	9
413308302	33	432044301	9	438496101	87	438587304	9
413308302	39	432044701	91	438497201	83	438587402	9
413308505	33	432044701	93	438497403	23	438587403	9
413308505	39	432046402	77	438498201	83	438587404	9
432000801	13	432046503	77	438498203	67	438587502	7
432000803	13	432047301	77	438498204	67	438587801	25
432002102	13	432047601	75	438501601	61	438587802	9
432003001	19	432047701	75	438580002	79	438587803	9
432003101	21	432048403	87	438580101	93	438587803	31
432003201	83	432049301	95	438580201	93	438587803	37
432003202	83	432049301	97	438580202	93	438587901	13
432004701	83	432216317	9	438580501	19	438588001	13
432004701	87	432216317	11	438580601	19	438588002	13
432005401	75	432216319	7	438580701	53	438588101	61
432005402	75	432251002	83	438581301	23	438588102	61
432006201	91	432251101	61	438581701	19	438588102	89
432006201	93	432251602	63	438581801	23	438588102	89
432011301	55	432251701	83	438582101	23	438588103	61
432011401	91	432261611	9	438582201	23	438588104	61
432011401	93	432293302	99	438582501	23	438588201	9
432011702	9	432293302	101	438582701	19	438588202	9
432013701	25	432390501	53	438583001	13	438588203	9
432013801	25	432505503	55	438583601	13	438588204	9
432014201	25	432505504	55	438583702	53	438588301	7
432014201	33	432509701	91	438583801	83	438589101	15
432014301	47	432509701	93	438584001	13	438589301	19
432014601	47	432510006	9	438584801	15	438589501	13
432014901	47	432510006	31	438585002	55	438589502	13
432014901	51	432510006	37	438585810	7	438589601	83
432015001	47	432511202	19	438585910	7	438589802	19
432015001	51	432514201	13	438586102	7	438590301	71
432015801	59	432514401	13	438586103	7	438590402	7
432015901	59	432515201	61	438586104	7	438590403	7
432016101	59	432515201	65	438586201	11	438590501	91
432016401	59	432517201	61	438586302	7	438590501	93
432016601	59	432517201	65	438586304	7	438590801	87
432017002	59	432517701	61	438586305	7	438591201	89
432017301	47	432517701	65	438586306	7	438591601	69
432017501	27	432517702	61	438586307	7	438591901	61
432017801	91	432517702	89	438586308	7	438594302	11
432017801	93	432517703	63	438586402	7	438595801	65

info@ipnaklade.u
8(800)500-69-5

Part.no/Part.no	Page/Sida	Part.no/Part.no	Page/Sida	Part.no/Part.no	Page/Sida	Part.no/Part.no	Page/Sida
438599901	55	438730278	41	438963732	31	471686019	105
438620301	55	438730283	19	438963732	37	471686020	103
438620701	83	438730285	77	438963733	29	471686020	105
438621001	15	438730286	69	438963733	31	471740107	23
438621201	51	438810200	91	438963733	37	471740402	23
438621401	7	438810200	91	438963832	29	471743301	69
438621501	11	438810200	93	438963832	31	471747601	59
438621701	39	438810202	29	438963832	37	471747701	59
438621801	39	438810202	31	438963833	29	471753540	73
438621901	39	438810202	37	438963833	31	471753541	73
438622401	37	438810202	83	438963833	37	471753542	73
438622501	51	438812003	47	438967801	33	471753543	73
438624001	11	438815201	27	438967801	39	471753544	73
438624401	41	438815201	47	438967804	33	471753545	73
438629601	9	438815202	27	438967804	39	471753546	73
438730007	59	438815203	27	438967811	33	471753547	73
438730009	71	438815203	47	438967811	39	471753548	73
438730040	47	438815701	61	438967901	25	471753549	73
438730040	47	438815701	83	438967901	33	471770166	53
438730041	49	438876201	99	438967901	39	471783701	47
438730042	19	438876211	99	471209532	83	471783710	47
438730042	49	438877301	43	471226403	33	471783730	47
438730043	59	438877301	45	471226403	39	471783740	47
438730048	57	438877901	25	471226569	35	471783750	47
438730058	63	438877901	43	471226569	41	471783760	47
438730066	29	438877901	45	471240152	83	471783801	25
438730087	99	438878001	29	471240989	61	471783801	31
438730088	99	438878002	33	471240989	61	471783801	37
438730201	29	438878002	39	471241719	23	471783901	25
438730204	69	438878002	39	471241833	61	471783901	31
438730208	63	438879101	99	471244012	19	471783901	37
438730221	57	438879301	99	471244040	27	471785502	83
438730238	29	438879601	99	471244040	33	471785704	91
438730238	31	438950202	25	471244040	39	471786701	85
438730238	37	438950202	31	471244970	59	471787107	63
438730238	53	438950202	39	471244995	35	471787601	59
438730239	63	438950603	35	471244995	41	471787701	81
438730241	53	438950603	41	471246140	55	471788202	79
438730242	27	438954901	15	471284101	81	471795801	27
438730243	29	438955301	15	471400960	19	471795802	25
438730243	33	438955501	25	471407401	25	471795802	35
438730243	39	438955501	35	471421002	75	471795802	41
438730244	29	438955501	41	471449402	21	471795802	49
438730245	29	438957001	33	471460101	101	471795802	99
438730247	27	438957001	39	471479201	103	471795802	101
438730250	53	438960110	29	471479201	105	471796002	101
438730254	33	438960110	31	471551101	55	471797601	59
438730256	33	438960110	37	471551604	55	471811806	83
438730257	33	438960110	53	471552300	53	471812623	77
438730262	33	438960120	29	471552300	55	471812855	83
438730262	39	438960120	31	471552501	55	471814015	81
438730263	35	438960120	37	471556000	7	471814016	81
438730263	41	438960190	29	471556400	7	471814390	91
438730264	33	438960190	31	471563100	55	471814390	93
438730264	41	438960190	37	471686015	103	471814715	23
438730266	15	438963401	27	471686015	105	471815906	81
438730274	33	438963402	31	471686016	103	471816400	27
438730274	39	438963402	37	471686016	105	471816400	33
438730276	33	438963692	31	471686017	103	471816400	39
438730276	39	438963692	37	471686017	105	471816400	47
438730277	35	438963693	31	471686018	103	471816400	75
438730277	41	438963693	37	471686018	105	471816400	83
438730278	35	438963732	29	471686019	103	471816401	75

info@zipnaklade.lu
8(800)500 6951

Part.no/Part.no	Page/Sida	Part.no/Part.no	Page/Sida	Part.no/Part.no	Page/Sida	Part.no/Part.no	Page/Sida
471816401	81	471828790	27	471869032	31	471899513	43
471817401	75	471828790	27	471869032	37	471899513	45
471818718	23	471828790	31	471869036	23	471899704	47
471819201	19	471828790	31	471869072	69	471899705	51
471819601	91	471828790	37	471869091	29	471900481	19
471819601	93	471828790	37	471869091	31	471901934	13
471819903	61	471828801	93	471869091	37	471903773	67
471819905	61	471830701	79	471875011	25	471907359	15
471821024	61	471832008	19	471875651	25	471907359	15
471821033	61	471832012	19	471876204	25	471907359	95
471823214	77	471832301	75	471876703	27	471907359	97
471823492	103	471832804	23	471877813	27	471920493	7
471823492	105	471834107	59	471877813	31	471920924	55
471823494	103	471834108	57	471877813	37	471921938	77
471823494	105	471834111	47	471878101	27	471922897	55
471823495	103	471834118	53	471878102	27	471922898	55
471823495	105	471834124	69	471878103	27	471952910	25
471823496	103	471834144	65	471878104	27	471955021	25
471823496	105	471834413	81	471878111	27	471955022	25
471823498	103	471834424	59	471879301	47	471960801	71
471823498	105	471834428	75	471879301	51	471962502	57
471823551	103	471834433	59	471879601	91	471962503	59
471823554	103	471834817	75	471879601	93	471962832	49
471823557	103	471836201	47	471879902	29	471962832	51
471823558	103	471836210	47	471879902	31	471962833	49
471823559	103	471836220	47	471879902	39	471962833	51
471823560	103	471836230	47	471882212	95	471964904	27
471823562	103	471836240	47	471882222	95	471964905	27
471823652	105	471836250	47	471882224	95	471964912	27
471823656	105	471836260	47	471882591	95	471967608	29
471823657	63	471840905	19	471882591	97	471967608	31
471823657	105	471840905	77	471883002	97	471967608	37
471823660	105	471845401	47	471883012	97	471967833	25
471823662	105	471850205	71	471883022	97	471967833	33
471823664	105	471850214	13	471883032	97	471967833	39
471823665	105	471857603	15	471883034	97	471967861	25
471823666	105	471857604	15	471883039	97	471967862	25
471823668	105	471857702	75	471883094	95	471967893	25
471823801	81	471860406	77	471883095	95	471967893	33
471825910	13	471860410	89	471885901	27	471967893	41
471826011	69	471860410	89	471885901	33	471967895	25
471826056	69	471861002	83	471885901	39	471967895	33
471826090	69	471861305	83	471885915	27	471967895	41
471826091	69	471861312	83	471885915	33	471968001	99
471826092	69	471861313	83	471885915	39	471978601	25
471827103	91	471862209	61	471886201	29	471978601	31
471827103	93	471862500	23	471886201	31	471978601	37
471827103	93	471862500	69	471886201	37	471981139	21
471827602	69	471864101	91	471899303	45	471981140	21
471827612	69	471864101	93	471899303	47	471981141	21
471827909	77	471866504	81	471899511	25	471981142	21
471828101	67	471868206	81	471899511	35	471981143	19
471828101	87	471868206	81	471899511	41	471981144	19
471828301	91	471869021	91	471899511	43	471981145	19
471828301	93	471869021	91	471899511	45	471981146	19
471828701	27	471869021	93	471899512	25	471983704	29
471828701	31	471869021	93	471899512	35	471983704	33
471828701	37	471869022	29	471899512	41	471983704	39
471828702	37	471869022	31	471899512	43	472578701	47
471828721	27	471869022	37	471899512	45	472578701	51
471828721	31	471869022	91	471899513	25	472602400	83
471828721	37	471869022	93	471899513	35	472602500	83
471828722	37	471869032	29	471899513	41	472602801	75

info@ipnakladem
8(800)500-69-51

Part.no/Part.no	Page/Sida	Part.no/Part.no	Page/Sida	Part.no/Part.no	Page/Sida	Part.no/Part.no	Page/Sida
472602901	75	725254451	13	735317141	23		
472625602	13	725255851	15	735318110	23		
472634601	75	725255851	15	735585200	75		
472636305	75	725262451	23	735963001	23		
472637401	75	725263251	13	736281651	67		
472637502	61	725263651	13	736281651	81		
472637502	89	725263651	15	736283151	61		
472637502	89	725534001	75	736283151	65		
472639002	71	728844501	53	736283751	61		
472639601	75	731231401	75	736284051	83		
472639702	75	731231601	55	736284951	61		
472681001	15	731232042	55	736284951	85		
472681201	15	731232201	79	736285251	83		
472681401	15	732211001	57	736285251	83		
472681701	13	732211001	59	736285251	87		
472681803	15	732211201	53	736285551	67		
472720601	83	732211201	71	736285551	87		
472725604	75	732211201	81	738881001	23		
472726003	75	732211242	75	741311322	81		
472728602	91	732211401	69	741311721	61		
472728602	93	732211601	65	741410220	91		
472908701	83	732211601	67	741410220	93		
472920901	91	732211601	71	741511524	77		
472920901	93	732211801	13	742111324	81		
472921402	91	732211801	19	742511324	81		
472921402	93	732211801	59	767510292	29		
472991223	53	732211801	67	767510292	35		
472991225	25	732211801	87	767510292	41		
472991225	33	732212001	15				
472991225	39	732212001	19				
472991226	89	732212201	13				
472991322	19	732212201	15				
472991344	53	732212201	17				
472992032	77	732212201	57				
487028900	99	732212201	95				
487028900	101	732212201	97				
487028908	99	732212401	13				
487028908	101	732212401	13				
720130706	75	732212401	15				
724129901	71	732311614	55				
725232742	75	732311614	55				
725236442	55	734112401	59				
725236661	67	734113601	71				
725236661	71	734115309	55				
725236661	71	734115309	57				
725236661	71	734115309	57				
725236661	81	734115309	59				
725236851	57	734115309	75				
725237451	57	734116401	59				
725245142	19	734116409	59				
725245542	59	734117301	15				
725245951	23	734117301	77				
725246171	59	734117609	55				
725246651	13	734117801	13				
725247551	13	734117801	15				
725250151	19	734117801	95				
725250181	19	734117801	97				
725250351	15	734117809	55				
725250381	19	734117809	75				
725250381	77	734118601	13				
725254051	95	734118601	15				
725254051	97	734180851	53				
725254242	55	735311409	55				

info@ipnasklade.ru
8(800)500-69-51

info@zipnasklade.ru
8(800)500-69-51

ELECTROLUX LAUNDRY SYSTEMS SWEDEN AB
341 80 Ljungby, Sweden. Telephone +46 372 661 00. Telefax +46 372 133 90
Internet: www.electrolux-wascator.com E-mail: els.info@electrolux.se