Spareparts Catalogue
Reservdelskatalog

W4130H Compass

info@zipnasklade.ru
8(800)500-69-51

Electrolux

Dok.no 438919025
Version 26.2017

info@zipnasklade.ru
8(800)500-69-51

W4130H Compass

Illustration	Page	Table of content
102496	6	Base and outer drum
102299	10	Lining and top panel
102301	14	Drum, rear gable
102302	18	Door and hinged joint
102500	22	Door lock
102490	24	Motor
102491	26	Motor control
102378	28	Control panel
102679	30	Programmer
102380	34	Electric components connection
102485	40	Drain valve and hoses
102316	42	Water connections
102482	44	Inlet valves and cable set
102483	46	Inlet valves and cable set
102384	48	Inlet valves and cable set
102383	50	Inlet valves and cable set
102385	52	Inlet valves and cable set
102343	54	Drain valve
102492	56	Drain valve, electrical
102501	58	Steam components
102344	60	Detergent container
102676	62	Out of balance switch
102596	64	Emergency stop
102663	66	Key switch
500115	68	Coin box
500109	70	Coin box
500110	72	Coinbox USA
500114	74	Electronic coin meter
102672	76	Coin meter
500113	82	Single system
102486	84	Compass control loader

info@zipnasklade.ru
8(800)500-69-51

info@zipnasklade.ru
8(800)500-69-51

W4130H Compass

Table of content	Innehållsförteckning	Page/Sida
Base and outer drum	Stativ och yttertrumma	6
Lining and top panel	Klädselplåtar och topplock	10
Drum, rear gable	Trumma,bakgavel	14
Door and hinged joint	Lucka och gångled	18
Door lock	Lucklås	22
Motor	Motor	24
Motor control	Motorstyrning	26
Control panel	Manöverpanel	28
Programmer	Programverk	30
Electric components connection	Eldetaljer anslutning	34
Drain valve and hoses	Avloppsventil och slangar	40
Water connections	Vattenanslutningar	42
Inlet valves and cable set	Inloppsventiler och ledningssatser	44
Inlet valves and cable set	Inloppsventiler och ledningssatser	46
Inlet valves and cable set	Inloppsventiler och ledningssatser	48
Inlet valves and cable set	Inloppsventiler och ledningssatser	50
Inlet valves and cable set	Inloppsventiler och ledningssatser	52
Drain valve	Avloppsventil	54
Drain valve, electrical	Avloppsventil, elektrisk	56
Steam components	Ångdetaljer	58
Detergent container	Tvättmedelsbehållare	60
Out of balance switch	Obalansbrytare	62
Emergency stop	Nödstopp	64
Key switch	Nyckelbrytare	66
Coin box	Myntlåda	68
Coin box	Myntlåda	70
Coinbox USA	Myntlåda USA	72
Electronic coin meter	Elektronisk myntmätare	74
Coin meter	Myntmätare	76
Single system	Single system	82
Compass control loader	Compass control loader	84

info@zipnasklade.ru
8(800)500-69-51

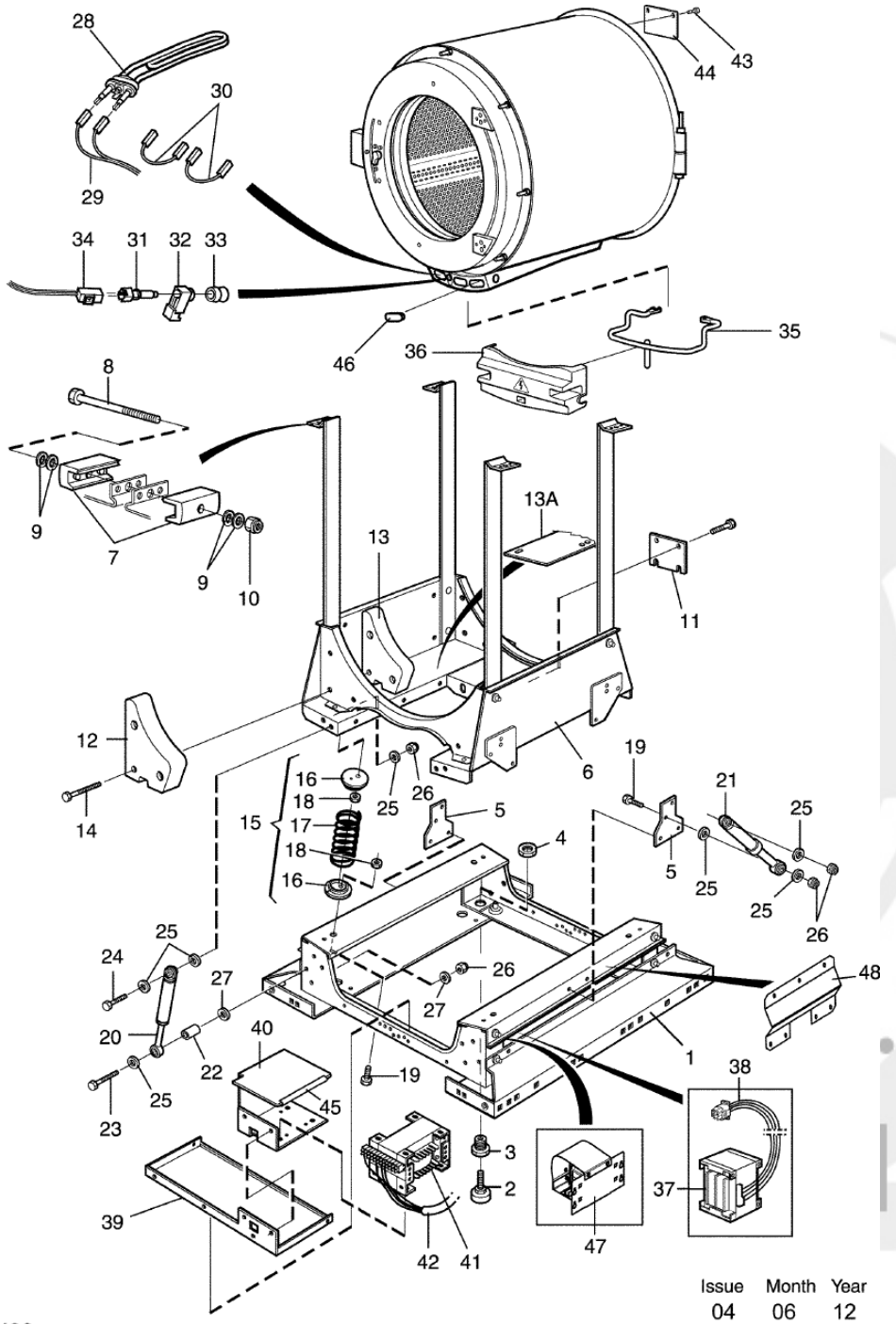

Issue	Month	Year
04	06	12

W4130H Compass
Base and outer drum
Stativ och yttertrumma

Illustration	Issue	Month	
Illustration	Utgåva	Månad	
102496/1	**6**	**6**	**2012**

Pos	Qty	Part.no	Description	Beskrivning	Notes
1	1	432131101	Frame	Stativ	Lower
2	4	438815601	• *Foot*	• *Fot*	M10X100
3	4	432145801	• *Bushing*	• *Bussning*	M10
4	4	471841301	• *Nut*	• *Mutter*	M20
5	2	432147001	• *Bracket*	• *Fäste*	Middle
6	1	432131202	Frame	Stativ	Upper
7	4	432145301	• *Tensioner*	• *Spänne*	
8	2	725246571	• *Screw*	• *Skruv*	M8X70
9	8	471780702	• *Tension plate*	• *Spännbricka*	18x8,4x2
10	2	732211801	• *Locking nut*	• *Låsmutter*	M8
11	1	432165001	• *Bracket*	• *Fäste*	
12	2	432130601	• *Counterweight*	• *Motvikt*	
13	2	432130701	• *Counterweight*	• *Motvikt*	
13	1	413506801	• *Counterweight*	• *Motvikt*	
14	6	471832808	• *Screw*	• *Skruv*	M10X80
15	1	472991305	Suspension	Fjäderenhet	Kit
16	8	*	• *Spring retainer*	• *Hållare fjäder*	
17	4	*	• *Spring*	• *Fjäder*	
18	8	*	• *Nut*	• *Mutter*	
19	12	471832805	Screw	Skruv	M8X20
20	1	472991309	Shock absorber	Stötdämpare	Kit, 4 pcs
21	1	472991311	Shock absorber	Stötdämpare	Kit, 2 pcs
22	8	471855503	Bushing	Bussning	
23	8	725246451	Screw	Skruv	M8X65
24	16	725246151	Screw	Skruv	M8X50
25	18	471850234	Washer	Bricka	8,4x24x2
26	12	732211801	Locking nut	Låsmutter	M8
27	8	471850234	Washer	Bricka	8,4x24x2
28	3	471982701	Heating element	Element	4.33kW 240V
28	3	471982702	Heating element	Element	4.33kW 254V

info@zipnasklade.ru
8(800)500-69-51

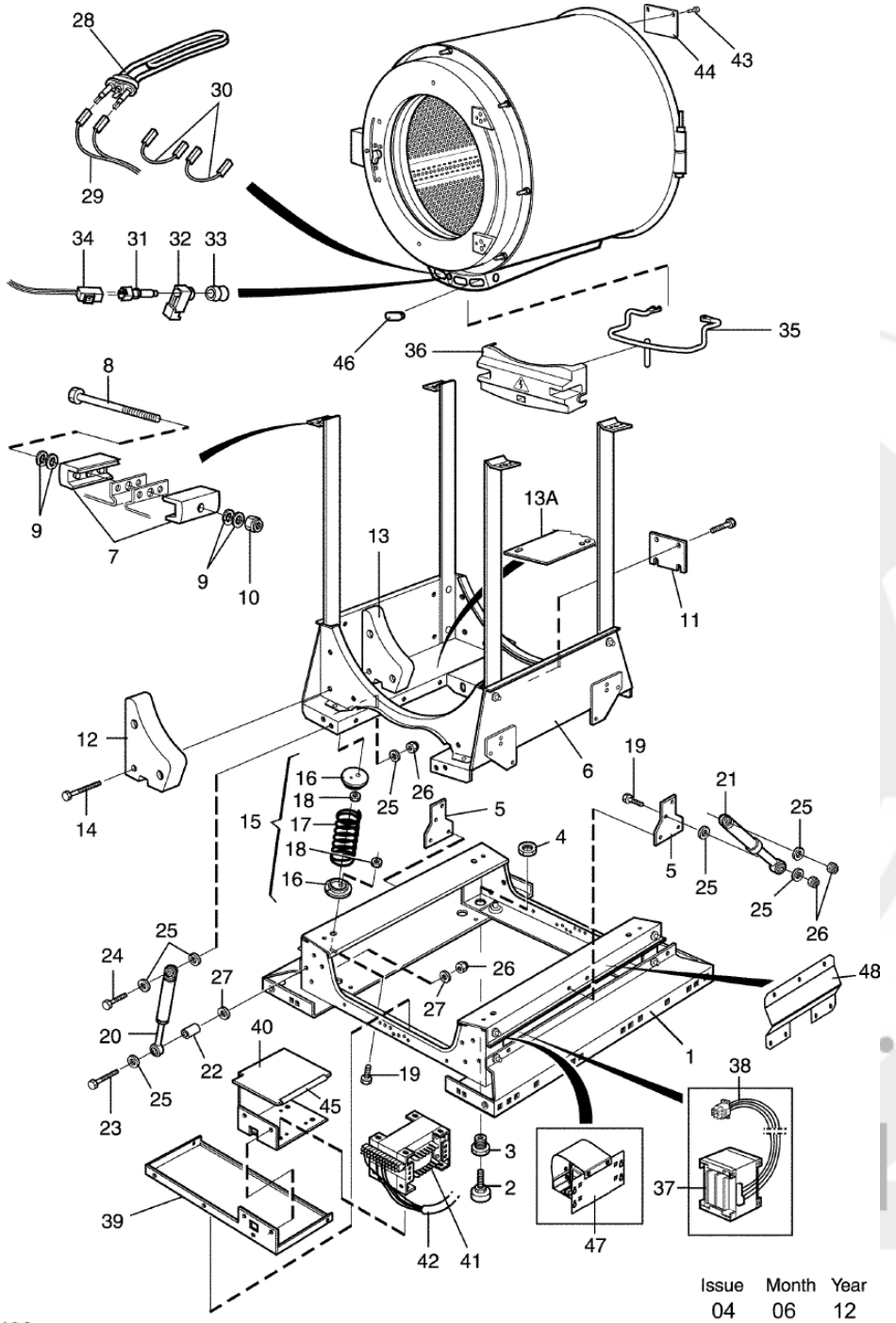

Issue	Month	Year
04	06	12

102496

Pos	Qty	Part.no	Description	Beskrivning	Notes
28	3	471982703	Heating element	Element	1.6kW 240V
28	3	471982704	Heating element	Element	4.33kW 277V
28	3	471982901	Heating element	Element	MOP 4.33kW 240V
28	3	471982902	Heating element	Element	MOP 4.33kW 254V
28	3	471982904	Heating element	Element	MOP 4.33kW 277V
29	1	413296512	Cable set	Ledningssats	400V
29	1	413296513	Cable set	Kabelsats	230V
29	1	413296524	Cable set	Ledningssats	EL/DS
30	1	413296511	Cable set	Ledningssats	400V
31	1	472990498	Sensor	Givare	Complete
32	1	*	• *Discharge*	• *Avlastning*	
33	1	*	• *Bushing*	• *Bussning*	
34	1	413327217	Cable set	Ledningssats	
35	1	432165301	Clamp	Bygel	
36	1	432165401	Cover	Skydd	
37	1	438956901	Transformer	Transformator	200V
38	1	432298501	Cable set	Ledningssats	200V
39	1	432141801	Beam	Balk	
40	1	432129501	Bracket	Konsol	
40	1	432141901	Bracket	Konsol	
41	1	438957201	Transformer	Transformator	100-120V
41	1	438956201	Transformer	Transformator	380-480V
42	1	432297701	Cable set	Ledningssats	380-480V 100-120V
43	8	471832805	Screw	Skruv	M8X20
44	1	432164901	Plate	Platta	
45	1	471818010	Strip	List	
46	3	471982299	Plug	Propp	
47	1	413370411	Choke	Choke	10A
48	2	432143801	Transport support	Transportstöd	

info@zipnasklade.ru
8(800)500-69-51

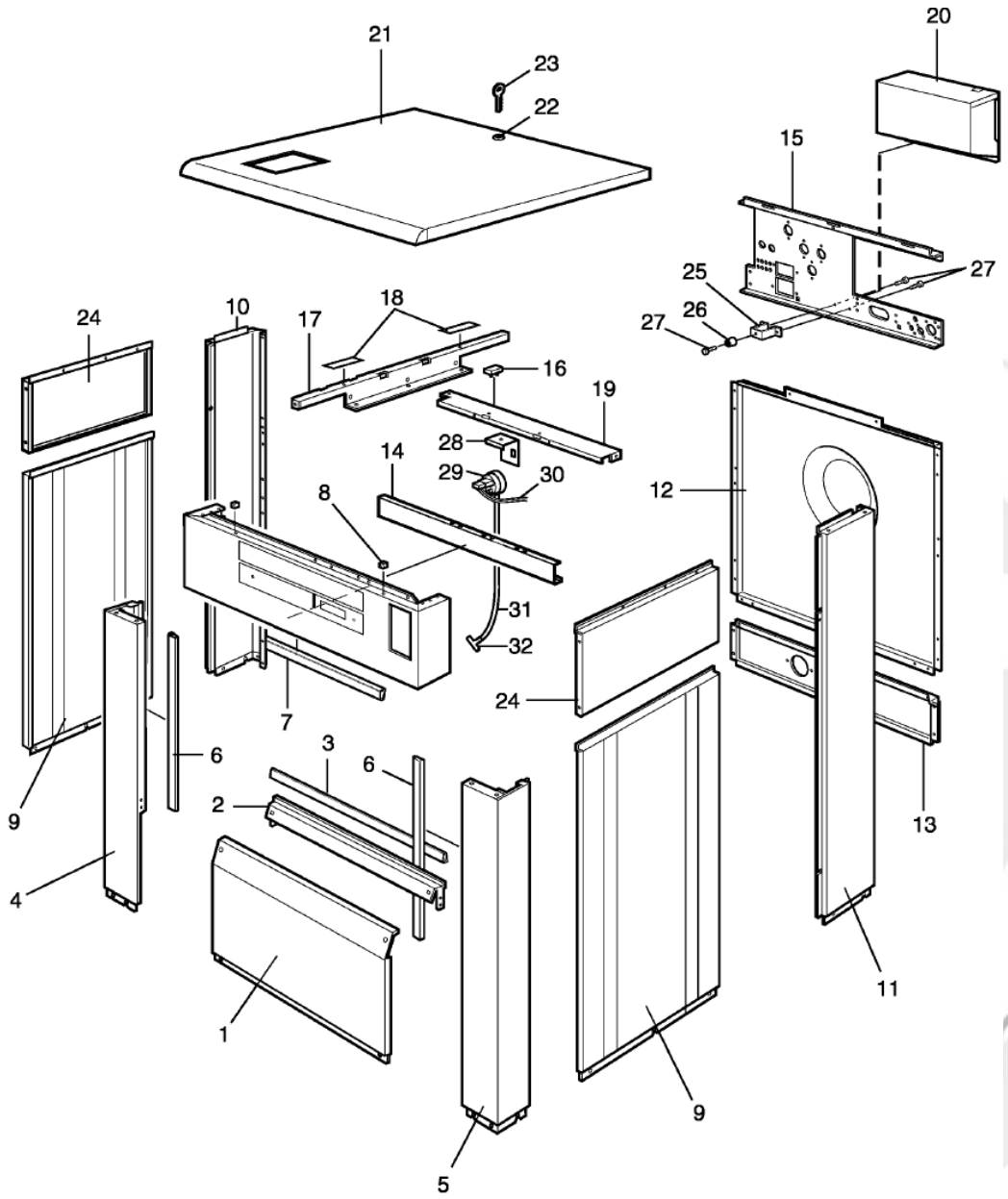

Issue	Month	Year
03	09	08

102299

W4130H Compass
Lining and top panel
Klädselplåtar och topplock

Illustration Illustration	Issue Utgåva	Month Månad	
102299/1	**7**	**2**	**2015**

Pos	Qty	Part.no	Description	Beskrivning	Notes
1	1	432200201	Front plate	Frontplåt	Stainless
2	1	432213501	Brace	Stag	
3	1	432216313	Rubber strip	Gummilist	L=725
4	1	432205001	Pillar	Stolpe	Stainless Left
5	1	432205002	Pillar	Stolpe	Stainless Right
6	2	432216311	Rubber strip	Gummilist	L=665
7	1	432216313	Rubber strip	Gummilist	L=725
8	2	432227301	Guide	Styrning	
9	2	432203203	Side panel	Sidoplåt	Grey
9	2	432203210	Side panel	Sidoplåt	Stainless
10	1	432203331	Side panel	Sidoplåt	Left Grey
10	1	432203310	Side panel	Sidoplåt	Stainless Left
11	1	432203332	Side panel	Sidoplåt	Grey
11	1	432203311	Side panel	Sidoplåt	Stainless Right
12	1	432206401	Rear panel	Bakstycke	Upper
13	1	432206501	Rear panel	Bakstycke	Lower
14	2	432217901	Brace	Stag	
15	1	432224701	Brace bracket	Stagplåt	-650/999999 -652/407141
15	1	432235201	Brace bracket	Stagplåt	652/407142-
16	2	471864102	Plug	Propp	
17	1	432213101	Brace	Stag	
18	4	471756521	Velcro tape	Kardborreband	
19	1	432212102	Brace	Stag	
20	1	432225901	Plate	Plåt	
20	1	432221501	Plate	Plåt	
21	1	432208201	Top panel	Topplock	
21	1	413220125	Top panel	Topplock	With lock
21	1	432208202	Top panel	Topplock	No detergent container
22	1	471782610	• *Lock*	• *Lås*	
23	1	472990099	• *Key*	• *Nyckel*	SET

8(800)500-69-51

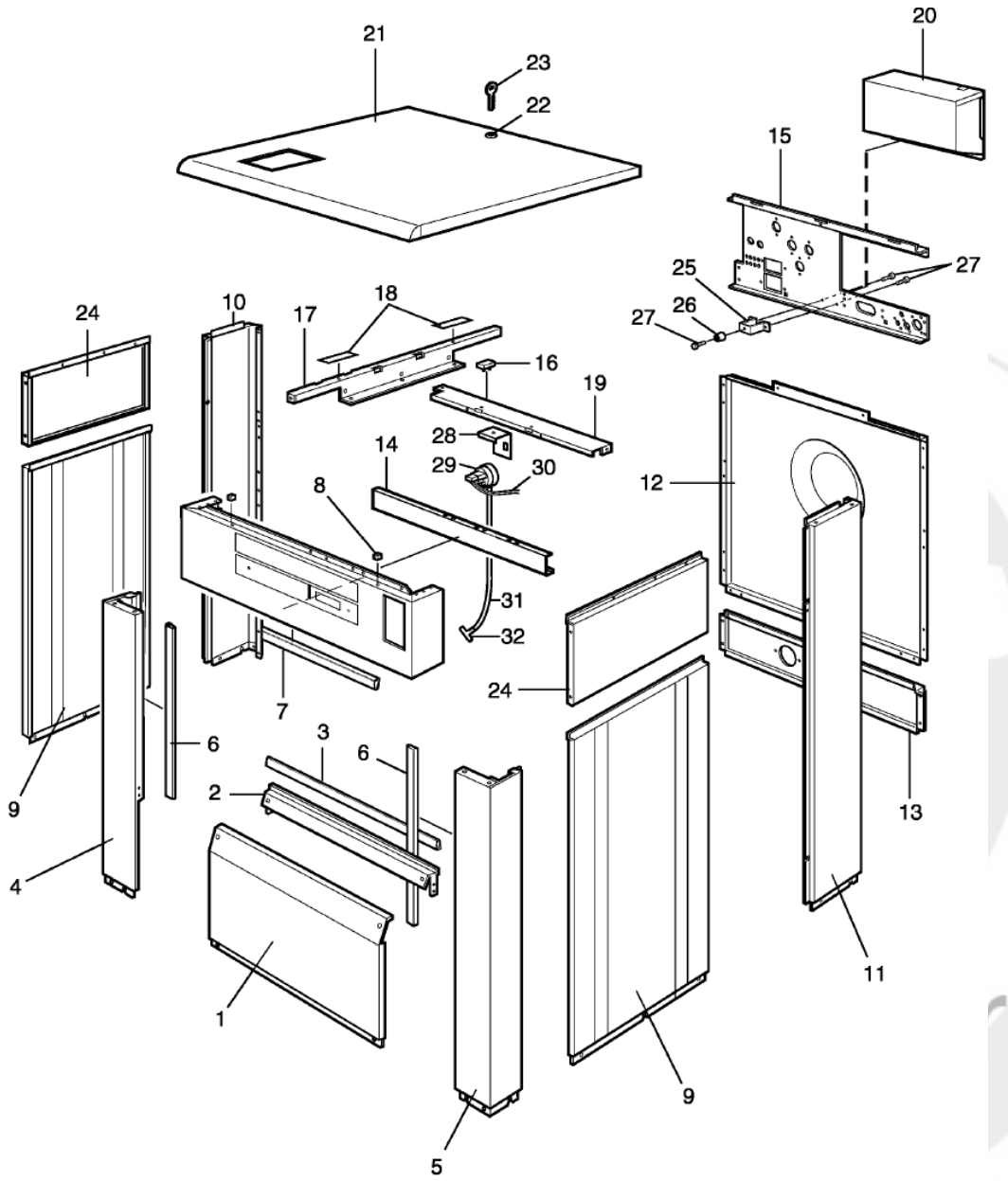

Issue	Month	Year
03	09	08

102299

W4130H Compass
Lining and top panel
Klädselplåtar och topplock

Illustration Illustration	Issue Utgåva	Month Månad	
102299/1	**7**	**2**	**2015**

Pos	Qty	Part.no	Description	Beskrivning	Notes
24	2	432203803	Side panel	Sidoplåt	Upper Grey
24	2	432203810	Side panel	Sidoplåt	Upper Stainless
25	1	432214701	Bracket	Konsol	
26	1	471798001	Stop	Stopp	
27	3	471834215	Screw	Skruv	
28	1	432631801	Bracket	Hållare	
29	1	471886102	Level control	Nivåkontroll	
30	1	413291502	Cable set	Ledningssats	USB MOP Heating
30	1	413291501	Cable set	Ledningssats	Compass Control
31	1	471243610	Hose	Slang	
32	1	471226569	T-pipe	T-rör	

info@zipnasklade.ru
8(800)500-69-51

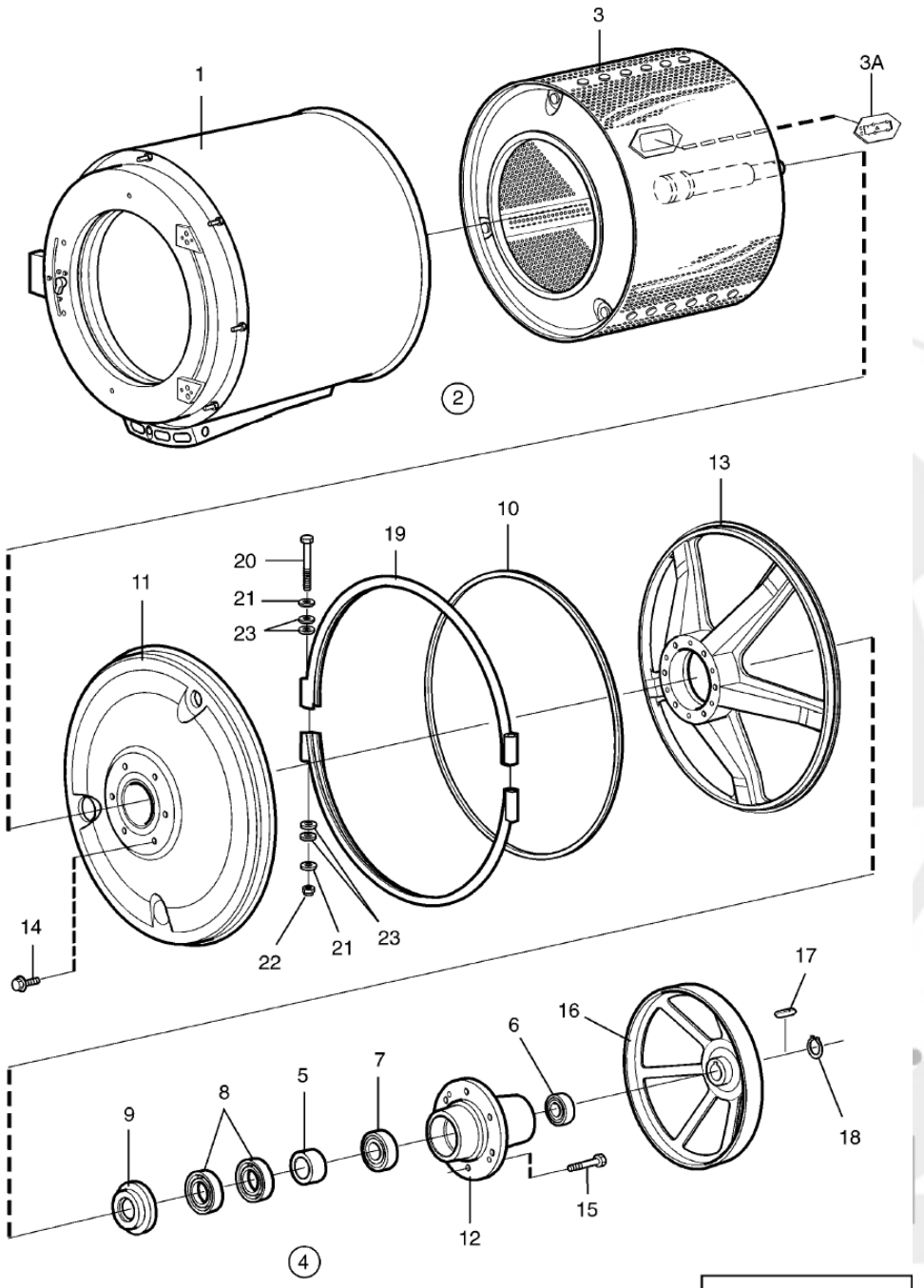

Issue	Month	Year
02	04	08

102301

W4130H Compass
Drum, rear gable
Trumma,bakgavel

Illustration	Issue	Month	
Illustration	Utgåva	Månad	
102301/1	**7**	**7**	**2013**

Pos	Qty	Part.no	Description	Beskrivning	Notes
1	1	432157201	Outer drum	Yttertrumma	Non-heated
1	1	432157202	Outer drum	Yttertrumma	El/Dual heating
1	1	432157203	Outer drum	Yttertrumma	Steam
2	1	432160701	Rear gable	Bakgavel	
2	1	432160702	Rear gable	Bakgavel	DBS Level tube
2	1	432160704	Rear gable	Bakgavel	Level tube
2	1	432160705	Rear gable	Bakgavel	DBS
2	1	432160707	Rear gable	Bakgavel	MOP Complete
3	1	432150201	• *Inner drum*	• *Innertrumma*	
3	1	432150203	• *Inner drum*	• *Innertrumma*	DBS
3	1	432150205	• *Inner drum*	• *Innertrumma*	MOP
3	2	472976801	•• *Door*	•• *Lucka*	
4	1	472991317	• *Repair kit*	• *Renoveringssats*	
5	1	*	•• *Bushing*	•• *Bussning*	
6	1	*	•• *Ball bearing*	•• *Kullager*	
7	1	*	•• *Ball bearing*	•• *Kullager*	
8	2	*	•• *Sealing ring*	•• *Tätningsring*	
9	1	*	•• *Sealing ring*	•• *Tätningsring*	
10	1	438815503	•• *Seal*	•• *Tätning*	
11	1	432154701	• *Lining*	• *Klädselplåt*	
12	1	432156201	• *Bearing housing*	• *Lagerhus*	
13	1	432154201	• *End piece*	• *Gavel*	
14	8	471832301	• *Screw*	• *Skruv*	M6X12
15	8	471832802	• *Screw*	• *Skruv*	M12X50
16	1	432155201	• *Pulley*	• *Remskiva*	
17	1	735950101	• *Wedge*	• *Plattkil*	14x9x50
18	1	735313900	• *C-clamp*	• *Spårring*	SGA 45
19	2	432156701	Tension strap	Spännband	
20	2	471922259	Screw	Skruv	M8X140
21	4	471850214	Washer	Bricka	8,4X20

info@zipnasklade.ru
8(800)500-69-51

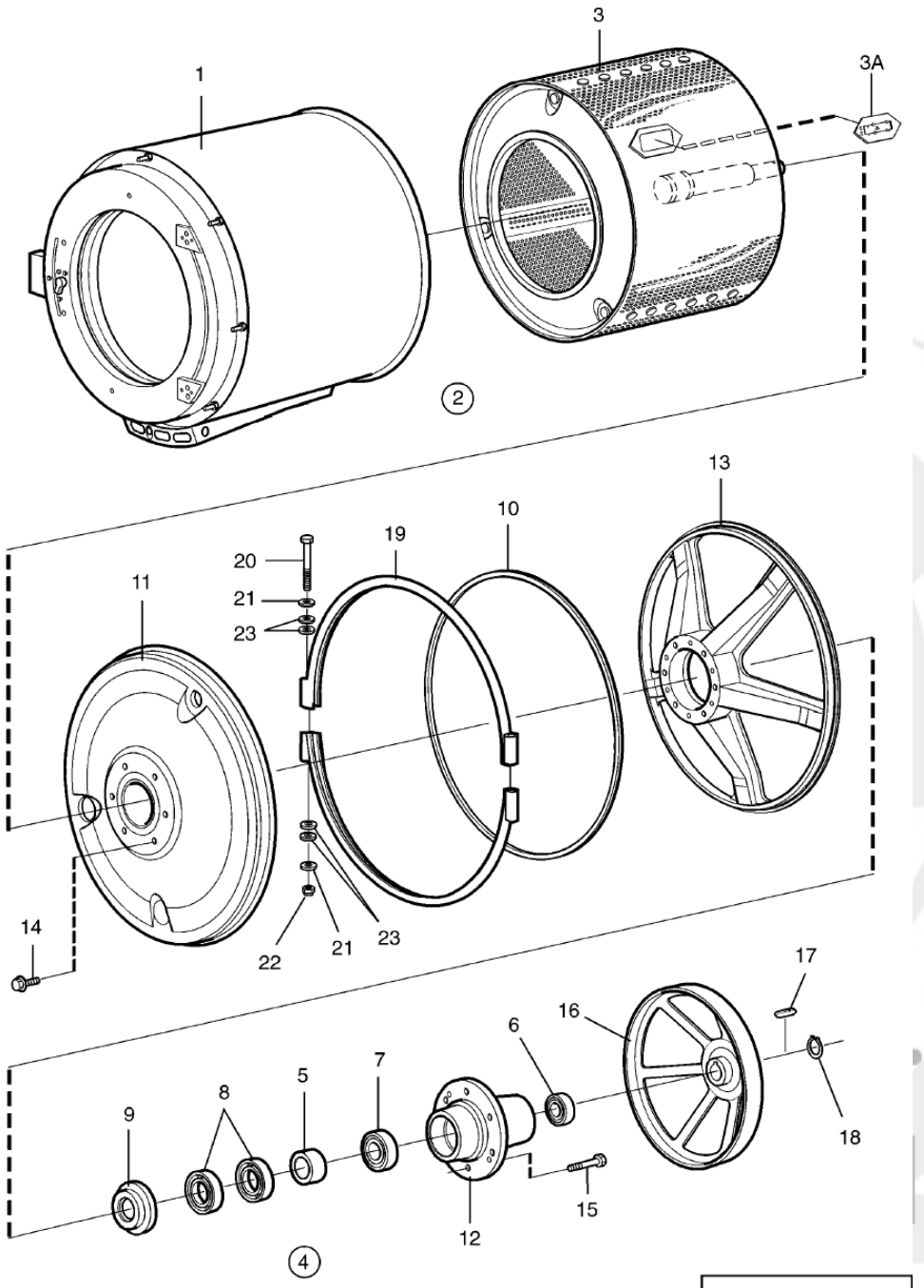

Issue	Month	Year
02	04	08

102301

Pos	Qty	Part.no	Description	Beskrivning	Notes
22	2	732211801	Locking nut	Låsmutter	M8
23					Not used

info@zipnasklade.ru
8(800)500-69-51

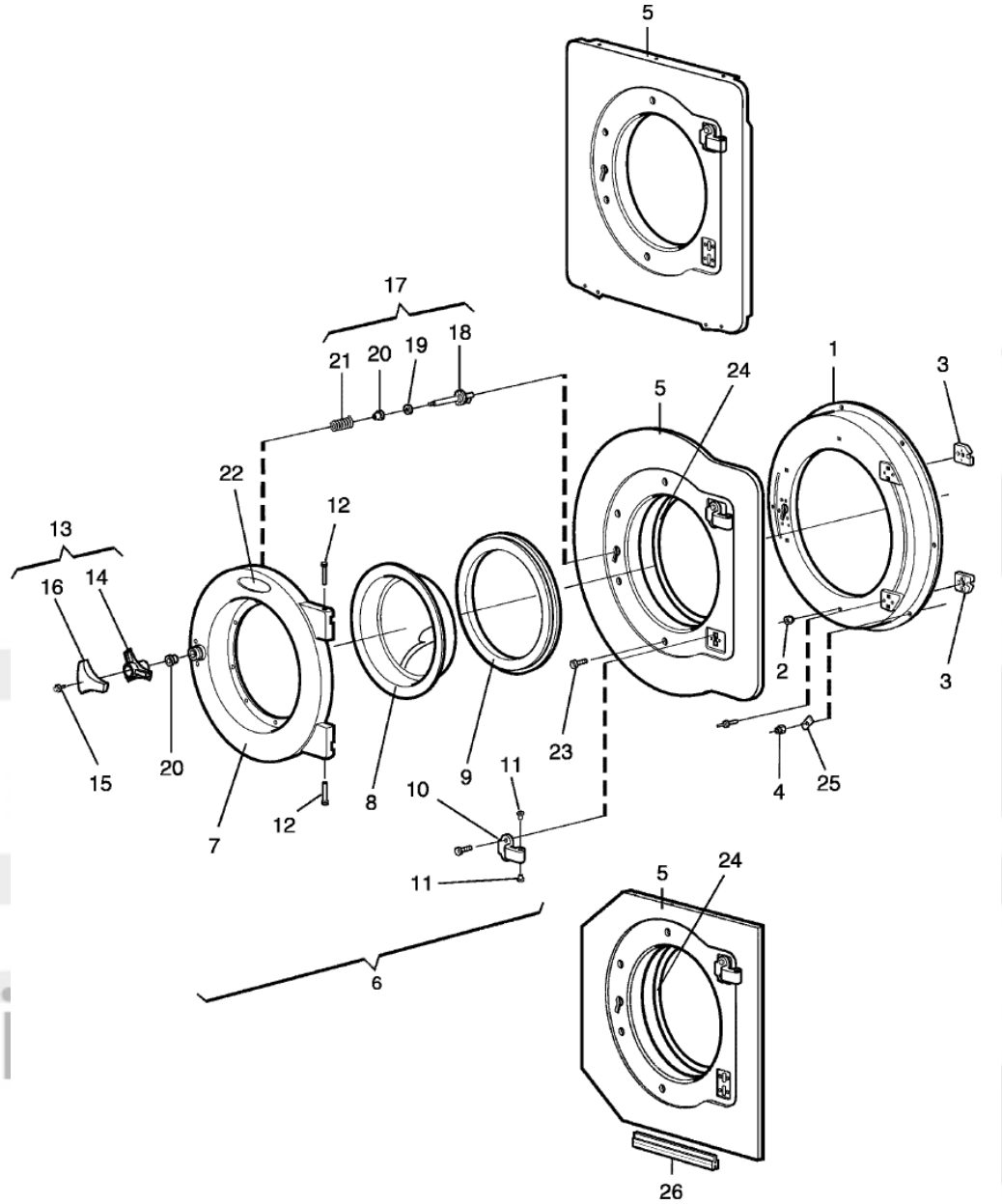

Issue	Month	Year
02	04	09

102302

W4130H Compass
Door and hinged joint
Lucka och gångled

Illustration Illustration	Issue Utgåva	Month Månad	
102302/1	**10**	**11**	**2015**

Pos	Qty	Part.no	Description	Beskrivning	Notes
1	1	432187201	Support frame	Fästplatta	
2	4	471845802	Nut	Mutter	M6
3	4	432195101	• *Bracket*	• *Fäste*	
4	11	471840402	Locking nut	Låsmutter	M6
5	1	432188703	Trim panel	Dekorplåt	
5	1	432188704	Trim panel	Dekorplåt	With coin meter
5	1	432188711	Trim panel	Dekorplåt	Stainless
5	1	432188712	Trim panel	Dekorplåt	With coin meter Stainless
6	1	413421201	Door	Lucka	Complete
7	1	*	• *Door*	• *Lucka*	
8	1	432185701	• *Door glass*	• *Luckglas*	
8	1	432185702	• *Door glass*	• *Luckglas*	Lagoon/ AquaClean
9	1	432184202	• *Door gasket*	• *Luckpackning*	Black
9	1	432184203	• *Door gasket*	• *Luckpackning*	EPDM Grey
9	1	432184204	• *Door gasket*	• *Luckpackning*	Silicon, Grey
10	2	432195002	• *Hinged joint*	• *Gångled*	
11	4	438406201	• *Bushing*	• *Bussning*	
12	2	432196201	• *Pin*	• *Tapp*	
13	1	472992002	• *Knob*	• *Vred*	Complete
14	1	*	•• *Knob*	•• *Vred*	Complete
15	1	725236661	•• *Screw*	•• *Skruv*	M6SF 6X12
16	1	432227001	•• *Knob*	•• *Vred*	
17	1	472992001	• *Lock shaft*	• *Låsaxel*	Complete
18	1	*	•• *Lock shaft*	•• *Låsaxel*	
19	1	*	•• *Washer*	•• *Bricka*	
20	2	*	•• *Bushing*	•• *Bussning*	
21	1	*	•• *Torsion spring*	•• *Vridfjäder*	
22	1	432262012	Sign	Skylt	Electrolux
22	1	432262002	Sign	Skylt	Wascomat
23	8	471834436	Screw	Skruv	

8(800)500-69-51

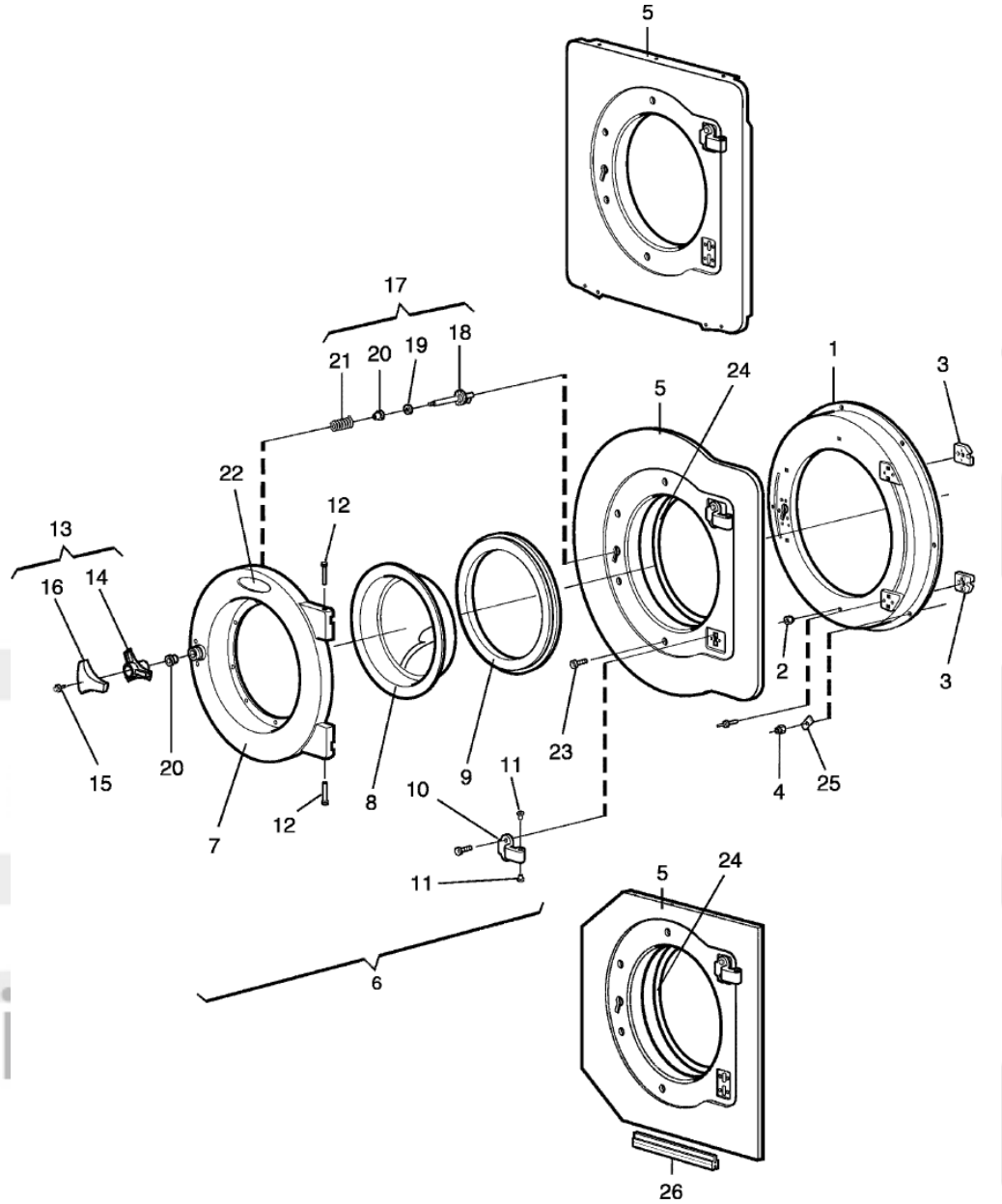

Issue	Month	Year
02	04	09

102302

Pos	Qty	Part.no	Description	Beskrivning	Notes
24					Not used
25	11	471852701	Spring washer	Fjäderbricka	
26					Not used

info@zipnasklade.ru
8(800)500-69-51

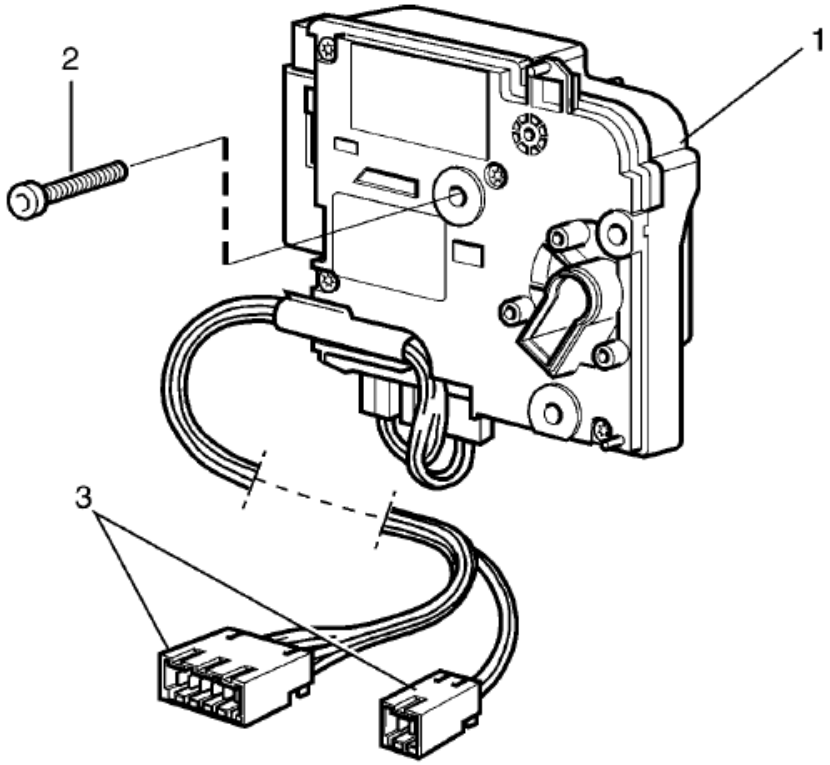

Issue	Month	Year
01	01	07

102500

W4130H Compass
Door lock
Lucklås

Illustration	Issue	Month	
Illustration	Utgåva	Månad	
102500/1	**1**	**1**	**2007**

Pos	Qty	Part.no	Description	Beskrivning	Notes
1	1	438956101	Door locking device	Lucklås	Complete
2	3	471834247	Screw	Skruv	M6X25
3	1	432290511	Cable set	Ledningssats	

info@zipnasklade.ru
8(800)500-69-51

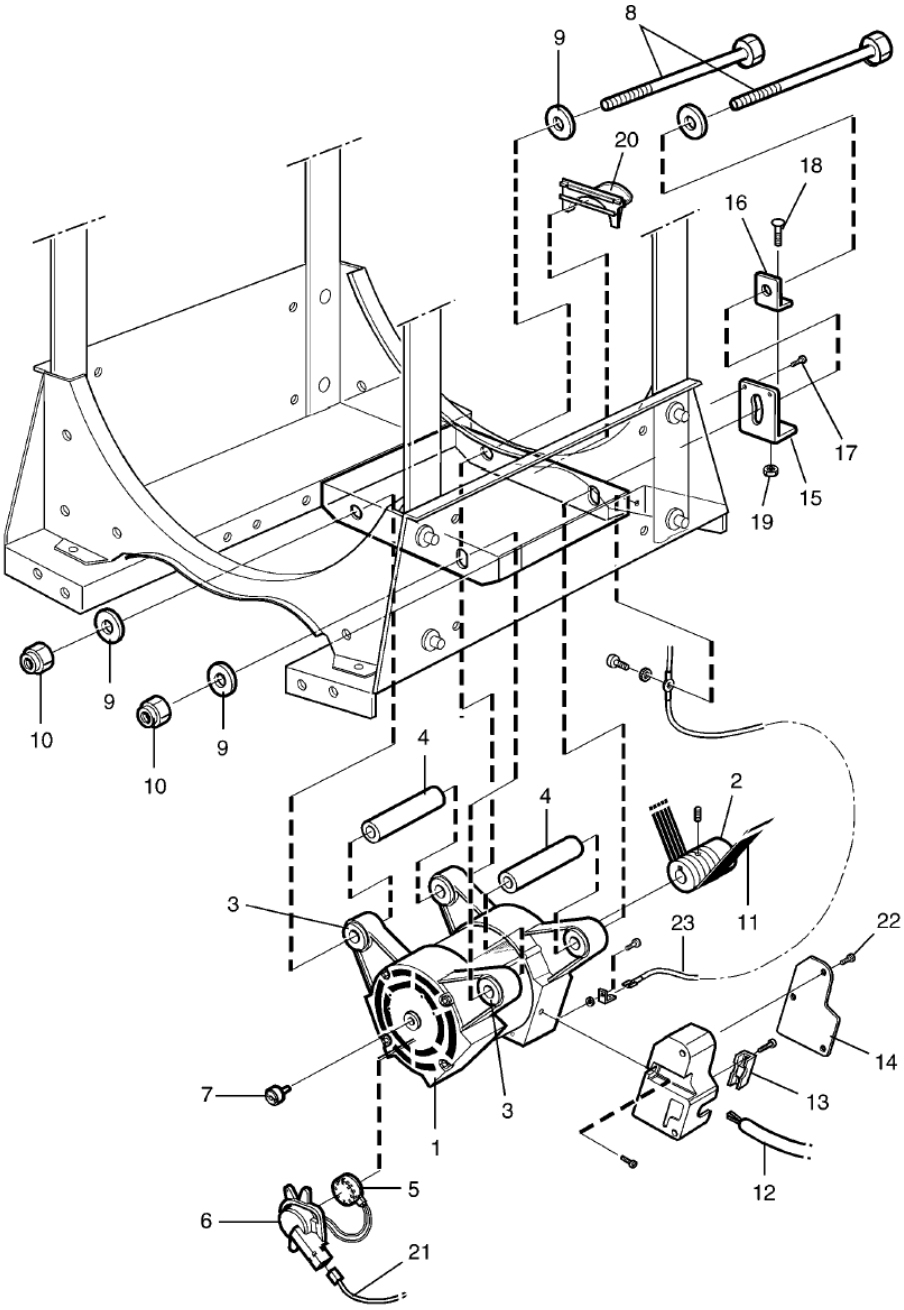

Issue	Month	Year
01	01	07

102490

W4130H Compass
Motor
Motor

Illustration	Issue	Month	
Illustration	Utgåva	Månad	
102490/1	**4**	**12**	**2008**

Pos	Qty	Part.no	Description	Beskrivning	Notes
1	1	438970321	Motor	Motor	Complete
2	1		• *Pulley*	• *Remskiva*	
3	4	438815802	• *Rubber bushing*	• *Gummibussning*	
4	2	432064101	• *Pipe*	• *Rör*	
5	1	471882601	• *Tacho sensor*	• *Tachogivare*	
6	1	432122901	• *Cover*	• *Kåpa*	
7	1	471882701	• *Magnet*	• *Magnet*	
8	2	471835605	Screw	Skruv	M12x240
9	4	471850200	Washer	Bricka	
10	2	732212201	Locking nut	Låsmutter	M12
11	1	471771112	Ribbed belt	Poly-V-rem	
12	1	432299002	Cable set	Kabelsats	
13	1	438979902	Clamp	Klämma	
14	1	438979903	Cover	Lock	
15	1	432145401	Belt tensioner	Remspännare	
16	1	432145501	Washer	Bricka	
17	2	471834223	Screw	Skruv	MRT-TT 5X10
18	1	471832203	Screw	Skruv	M8X50
19	1	732211801	Locking nut	Låsmutter	M8
20	1	432147301	Drip guard	Droppskydd	
21	1	413327218	Cable set	Ledningssats	
22	3	471834213	Screw	Skruv	MRT-TT 4X10
23	1	432298302	Cable set	Ledningssats	Main switch

info@zipnasklade.ru
8(800)500-69-51

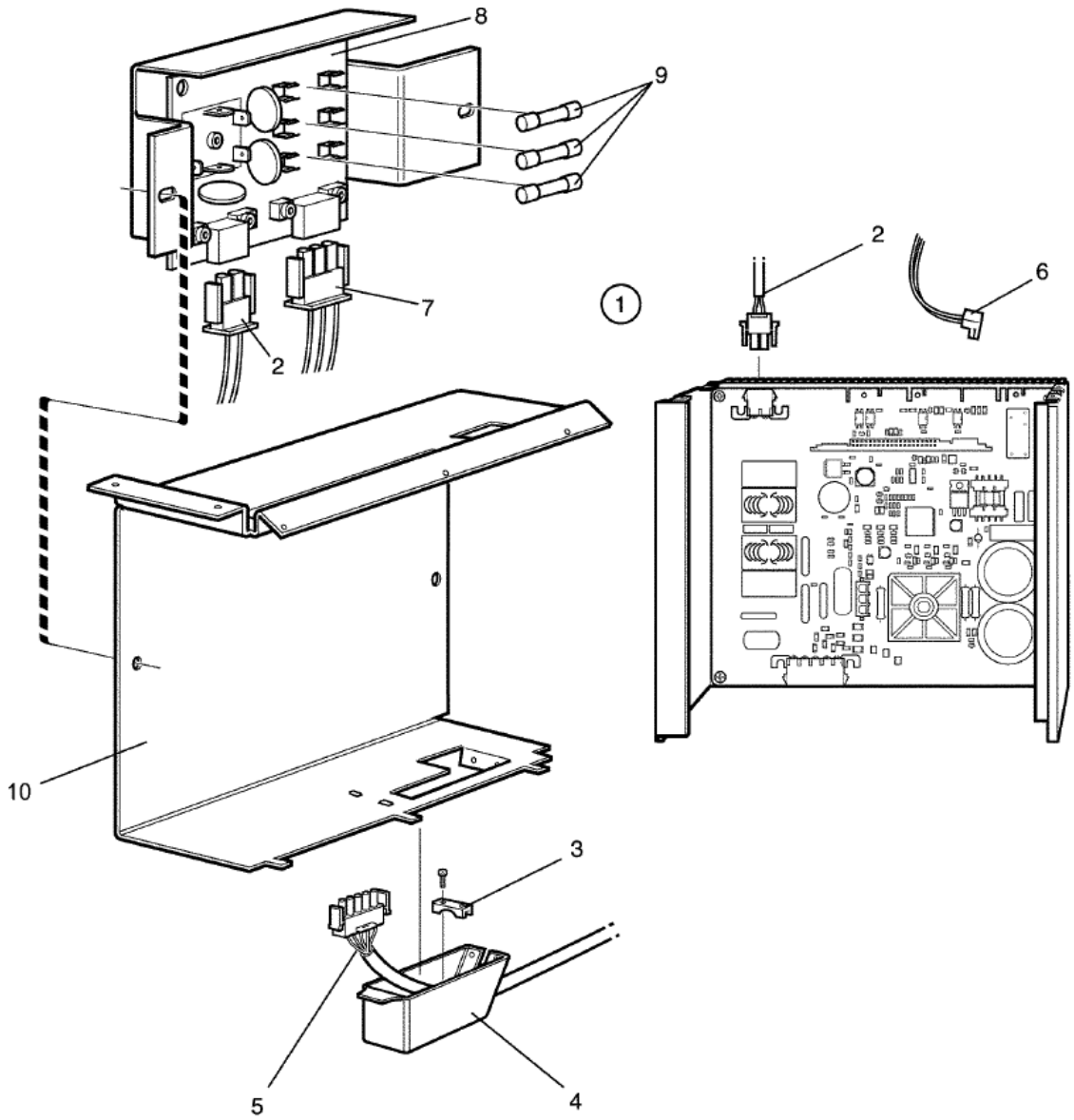

Issue	Month	Year
03	**11**	**11**

102491

Pos	Qty	Part.no	Description	Beskrivning	Notes
1	1	472992919	Motor control	Motorstyrning	200-240V Complete -650/111249
1	1	472992941	Motor control unit	Motorstyrningsenhet	200-240V 650/111250- 652/400000-
2	1	413291803	• *Cable set*	• *Ledningssats*	2-pole
2	1	413291804	• *Cable set*	• *Ledningssats*	Trafo and choke 2-pole
2	1	413291807	• *Cable set*	• *Ledningssats*	Japan 2-pole
3	1	438979912	Clamp	Klämma	
4	1	438979901	Cover	Kåpa	
6	1	413308422	Cable set	Ledningssats	P-bus-X302
7	1	432296101	Cable set	Ledningssats	3AC
8	1	438877402	Printed circuit board	Kretskort	
9	3	471876802	Fuse	Säkring	15A
10	1	472993802	Cover	Skydd	

info@zipnasklade.ru
8(800)500-69-51

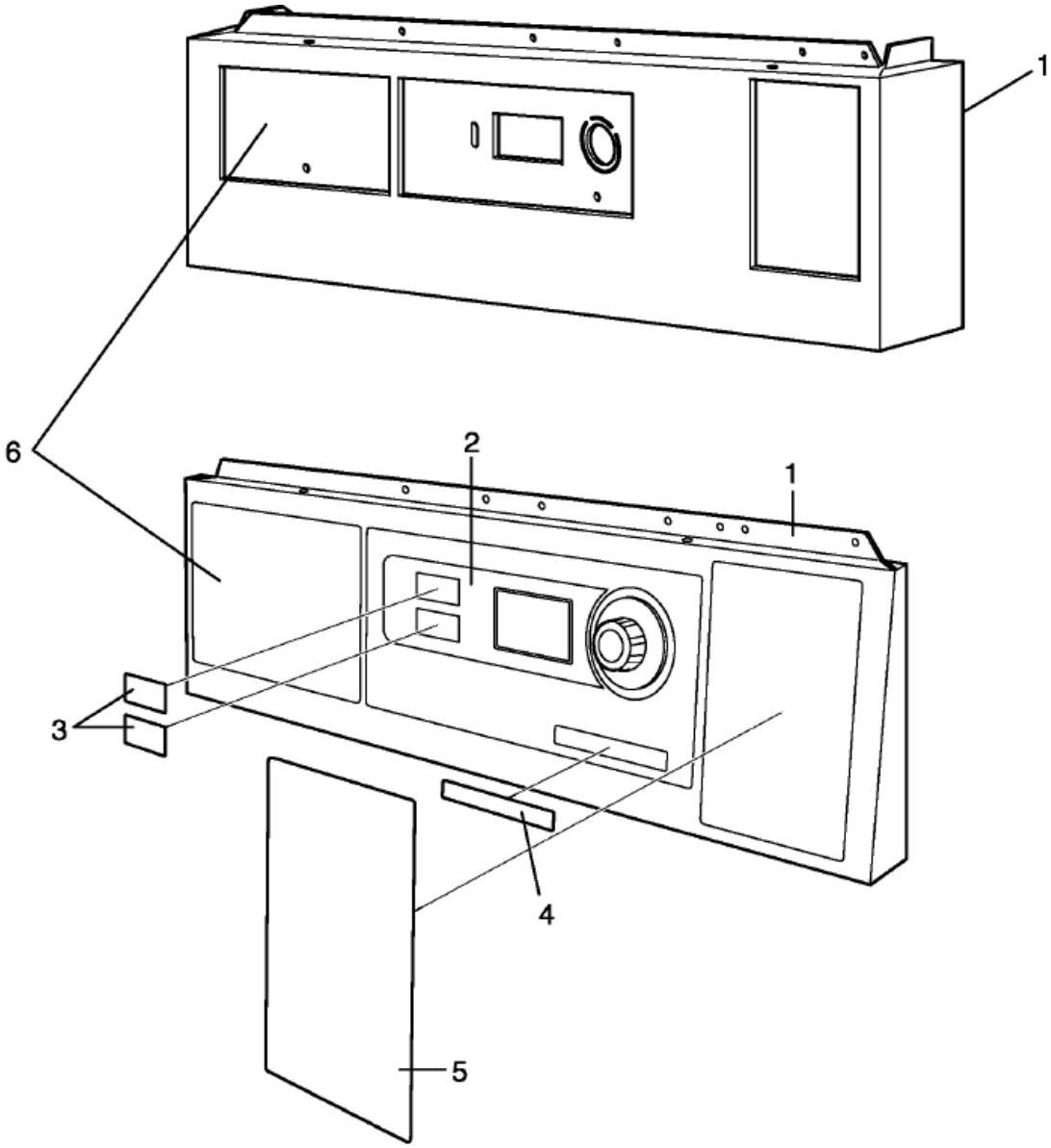

Issue	Month	Year
02	11	07

102378

W4130H Compass
Control panel
Manöverpanel

Illustration	Issue	Month	
Illustration	Utgåva	Månad	
102378/1	**6**	**8**	**2010**

Pos	Qty	Part.no	Description	Beskrivning	Notes
1	1	432226501	Front panel	Frontpanel	
2	1	472579202	Panel sign	Panelskylt	40°, 60°
2	1	472579201	Operation sign	Betjeningsskylt	
2	1	472579210	Panel sign	Panelskylt	1&2
2	1	472579301	Panel sign	Panelskylt	NEUTRAL NEUTRAL
3	1	471778810	Sign	Skylt	
4	1	413260401	Type plate	Typskylt	W4130H
4	1	413261115	Type plate	Typskylt	EX630co
4	1	413261152	Type plate	Typskylt	EX630cc
5	1	432215011	Cover plate	Täckplåt	
6	1	432264721	Instruction plate	Instruktionsskylt	Swedish
6	1	432264723	Instruction plate	Instruktionsskylt	40°, 60°
6	1	432264724	Instruction plate	Instruktionsskylt	1, 2
6	1	432264726	Instruction plate	Instruktionsskylt	NEUTRAL
6	1	432264727	Instruction plate	Instruktionsskylt	Japan, 3L41
6	1	432264729	Instruction plate	Instruktionsskylt	Japan, 3L41 Payment
6	1	432264730	Instruction plate	Instruktionsskylt	COIN USA English/Spanish
6	1	432264726	Instruction plate	Instruktionsskylt	USA, OPL
6	1	432264731	Instruction plate	Instruktionsskylt	3M14 Swedish

info@zipnasklade.ru
8(800)500-69-51

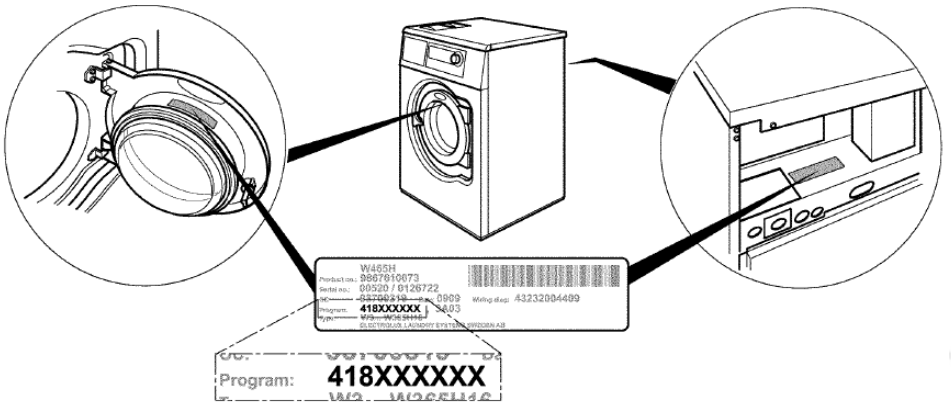

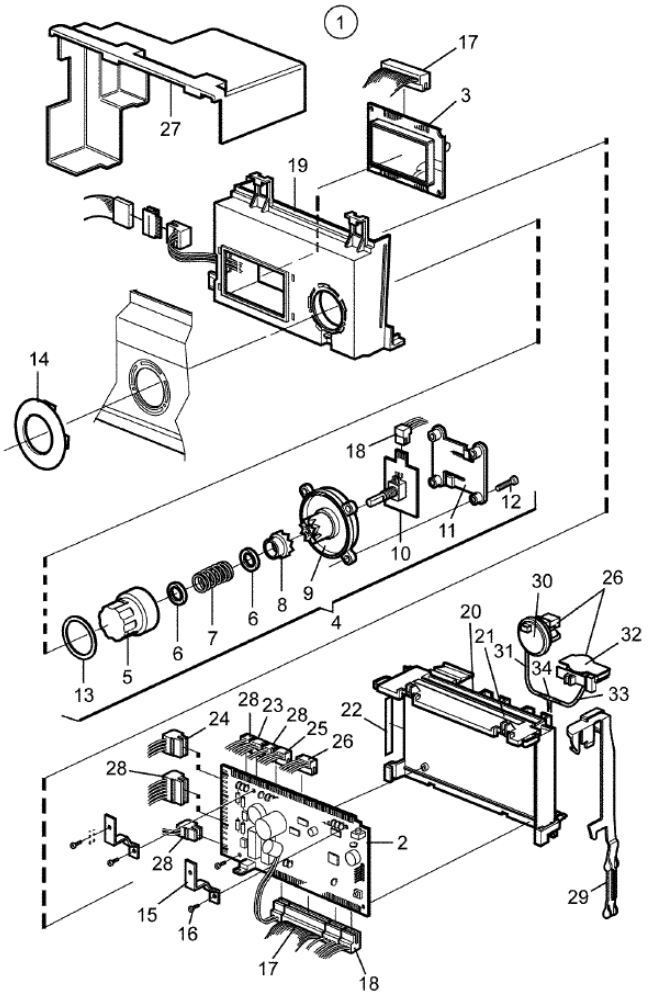

102679

Issue	Month	Year
01	02	10

W4130H Compass
Programmer
Programverk

Illustration Illustration	Issue Utgåva	Month Månad	
102679/0	**3**	**3**	**2012**

Pos	Qty	Part.no	Description	Beskrivning	Notes
1	1	432690204	Programmer	Programverk	Without software. Software available on website
1	1	432690206	Programmer	Programverk	Japan Without software. Software available on website
2	1	*	• *Printed circuit board*	• *Kretskort*	CPU
3	1	432870203	• *Display*	• *Display*	
4	1	472990497	• *Program selector*	• *Programväljare*	
5	1	*	•• *Knob*	•• *Vred*	
6	2	*	•• *Rubber washer*	•• *Gummibricka*	
7	1	*	•• *Spring*	•• *Fjäder*	
8	1	*	•• *Sleeve*	•• *Hylsa*	
9	1	*	•• *Cover*	•• *Lock*	
10	1	438965901	•• *Program selector*	•• *Programväljare*	
11	1	*	•• *Spring*	•• *Fjäder*	
12	4	471834609	•• *Screw*	•• *Skruv*	T40x30
13	1	*	•• *Ring*	•• *Ring*	
14	1	432634402	• *Locking ring*	• *Låsring*	
15	2	432632701	• *Bracket*	• *Hållare*	
16	2	471834602	• *Screw*	• *Skruv*	
17	1	413328001	• *Cable set*	• *Ledningssats*	
18	1	413327420	• *Cable set*	• *Ledningssats*	4-pole
19	1	432632501	• *Cover*	• *Kåpa*	Front
20	1	432632401	• *Cover*	• *Kåpa*	Rear
21	1	471467395	• *Sign*	• *Skylt*	
22	1	471467397	Sign	Skylt	
23	1	413327405	Cable set	Ledningssats	D-bus
24	1	413308416	Cable set	Ledningssats	P-bus
25	1	413327413	Cable set	Ledningssats	M-COM
26	1	413327502	Cable set	Ledningssats	Level control
27	1	432632601	Cover	Skydd	
28	1	432290511	Cable set	Ledningssats	Door/Temp./Tacho.
29	1	432634501	Arm	Arm	

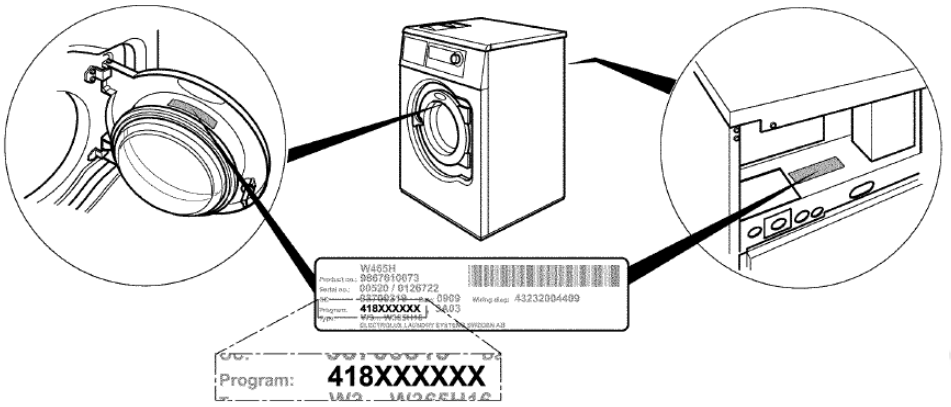

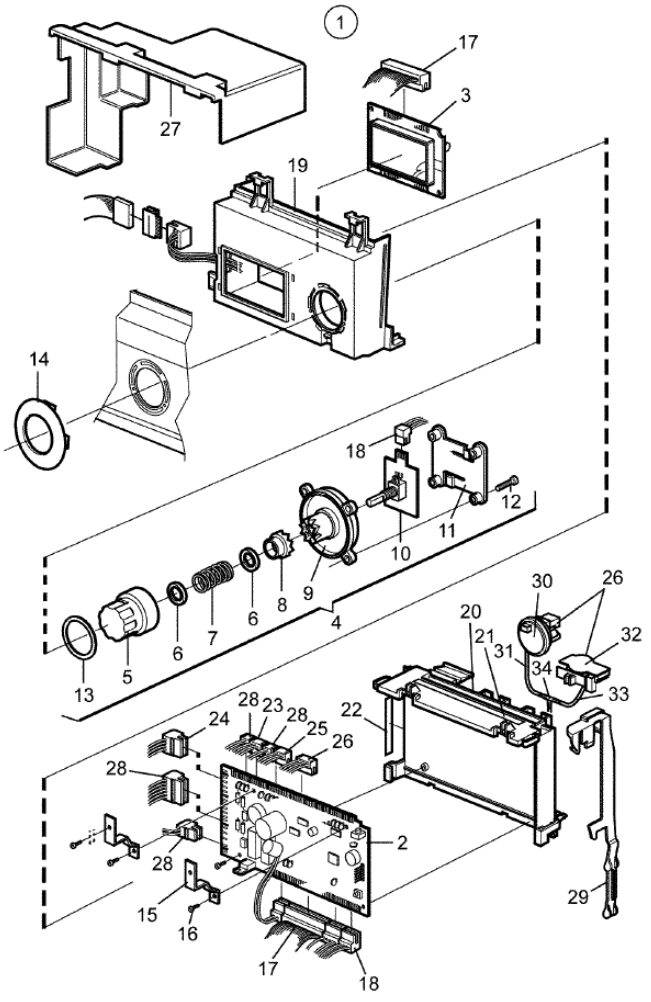

102679

Issue	Month	Year
01	02	10

Pos	Qty	Part.no	Description	Beskrivning	Notes
30	1	471886101	Level guard	Nivåvakt	
31	1	471244241	Hose	Slang	L=70
32	1	471886301	Level guard	Nivåvakt	
33	1	438244002	Hose	Slang	L=100
34	1	471226569	T-pipe	T-rör	

info@zipnasklade.ru
8(800)500-69-51

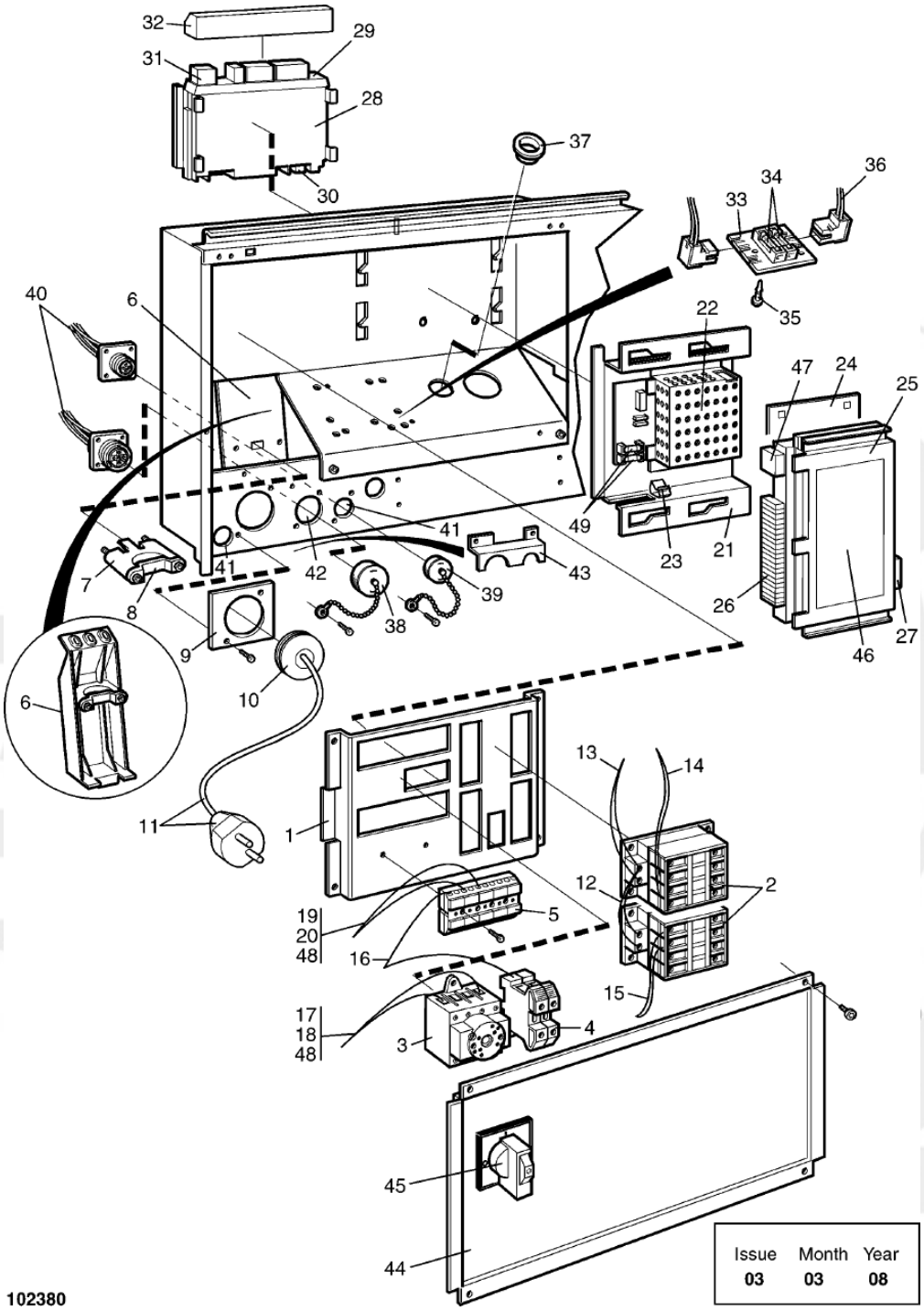

Issue	Month	Year
03	03	08

W4130H Compass
Electric components connection
Eldetaljer anslutning

Illustration Illustration	Issue Utgåva	Month Månad	
102380/1	**9**	**6**	**2017**

Pos	Qty	Part.no	Description	Beskrivning	Notes
1	1	432215401	Mounting plate	Monteringsplåt	
2	Rq	438963622	Contactor	Kontaktor	220-240V 50Hz
2	Rq	438963623	Contactor	Kontaktor	200-220V 60Hz
2	Rq	438963624	Contactor	Kontaktor	50/60Hz
3	Rq	438967801	Main switch	Huvudbrytare	3-pole, 32A
3	Rq	438967802	Main switch	Huvudbrytare	3-pole, 40A
3	Rq	438967803	Main switch	Huvudbrytare	3-pole, 63A
3	Rq	438967804	Main switch	Huvudbrytare	3-pole, 80A
3	Rq	438967811	Main switch	Huvudbrytare	4-pole, 32A
3	Rq	438967812	Main switch	Huvudbrytare	4-pole, 40A
3	Rq	438967813	Main switch	Huvudbrytare	4-pole, 63A
3	Rq	438967814	Main switch	Huvudbrytare	4-pole, 80A
4	2	471876701	Ground terminal	Jordplint	SL10
4	2	471876702	Block	Plint	SL16
5	1	471878301	Block	Plint	
5	1	471878303	Block	Plint	3-pole
5	1	471878304	Block	Plint	4-pole
6	1	432225801	Plate	Plåt	
6	1	432221401	Cable clamp	Kabelklämma	PLASTIC
7	1	471785912	Clamp	Klämma	Lower part
8	1	471785916	Clamp	Klämma	Upper part
9	1	432219901	Plate	Plåt	Ø21
9	1	432219903	Plate	Plåt	Ø26
9	1	432219905	Plate	Plåt	Ø33
10	1	438872001	Grommet	Genomföring	M25
10	1	438872002	Grommet	Genomföring	M32
10	1	438872003	Grommet	Kabelgenomföring	M40
11	1	487170245	Plug	Stickpropp	Japan
12	1	432298401	Cable set	Ledningssats	
13	1	413318202	Cable set	Ledningssats	Heating

info@zipnasklade.ru
8(800)500-69-51

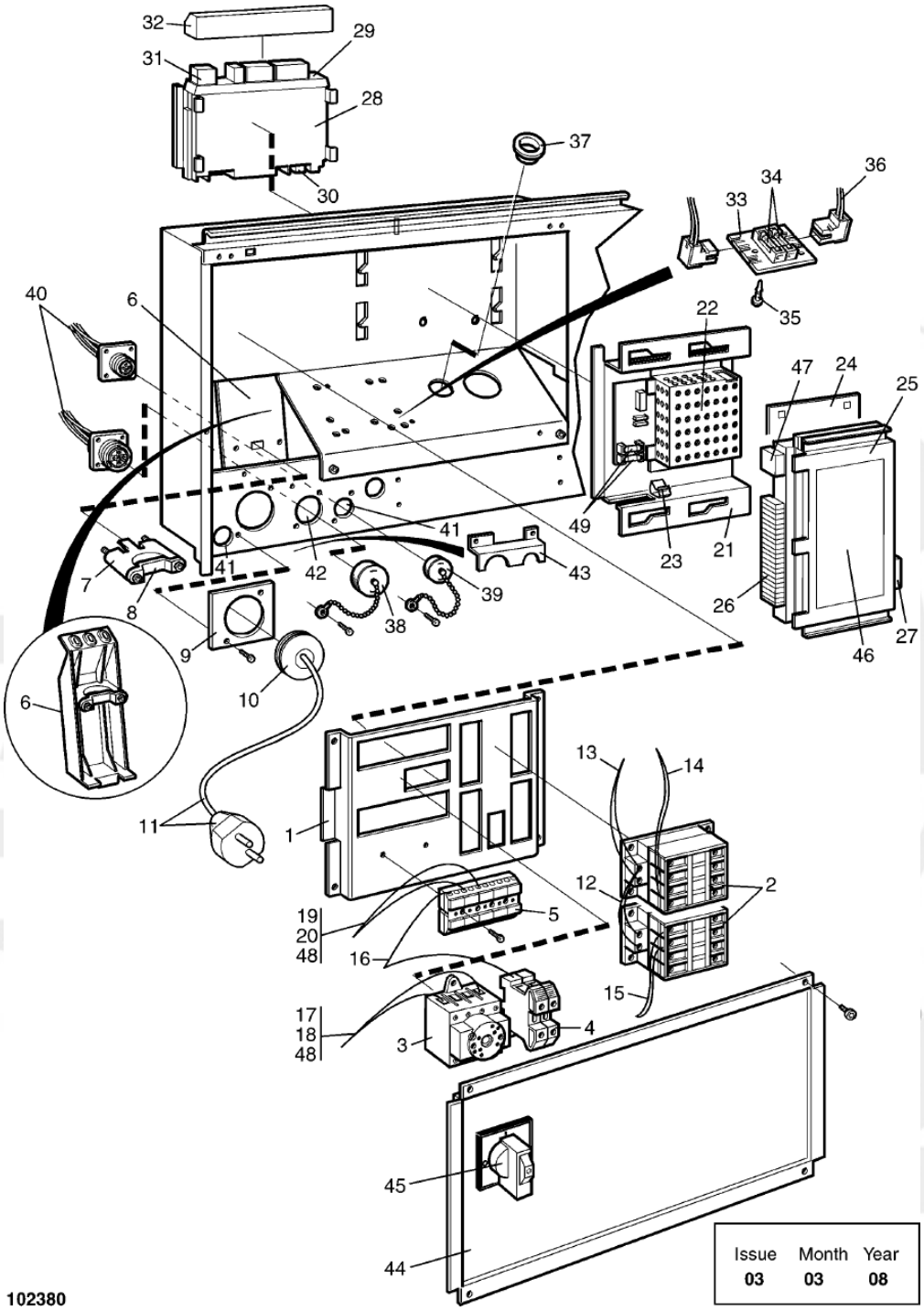

Issue	Month	Year
03	03	08

Pos	Qty	Part.no	Description	Beskrivning	Notes
13	1	413591502	Cable set	Ledningssats	MOP Heating
14	3	432295403	Cable set	Ledningssats	
15	3	432295413	Cable set	Ledningssats	
16	1	432298304	Cable set	Ledningssats	
17	1	432309286	Cable set	Ledningssats	
18	1	432310601	Cable set	Ledningssats	Trafo
19	1	413308235	Cable set	Ledningssats	
20	1	413290502	Cable set	Ledningssats	Trafo Trafo
21	1	432225701	Mounting plate	Monteringsplåt	
22	1	432680506	Power supply	Strömförsörjning	3,15 A
23	1	432632001	Clamp	Klämma	
24	1	432225601	Plate	Plåt	
25	1	432713063	I/O module	I/O modul	
26	Rq	438870101	Multistik	Kantanslutning	
26	Rq	438870103	Multistik	Kantanslutning	
27	1	413327401	Cable set	Ledningssats	
28	1	432690302	I/O module	I/O modul	Type 11
28	1	432693302	Printed circuit board	Kretskort	I/O-card type 3
30	1	413327403	Cable set	Ledningssats	4-pole
31	1	413308425	Cable set	Ledningssats	4-pole
32	1	432632301	Cover	Skydd	
33	1	438879702	Printed circuit board	Kretskort	
34	2	471875011	• *Fuse*	• *Säkring*	1,25A
35	3	471796002	Support	Stöd	
36	1	413308205	Cable set	Ledningssats	
37	1	762118210	Grommet	Genomföring	Ø22,2MM
38	1	438795002	Cover washer	Täckbricka	14-pole
39	1	438795001	Cover washer	Täckbricka	4-pole
40	1	413294601	Cable set	Ledningssats	
41	2	471797703	Blind plug	Blindpropp	Ø22

info@zipnaskiade.ru
8(800)500-69-51

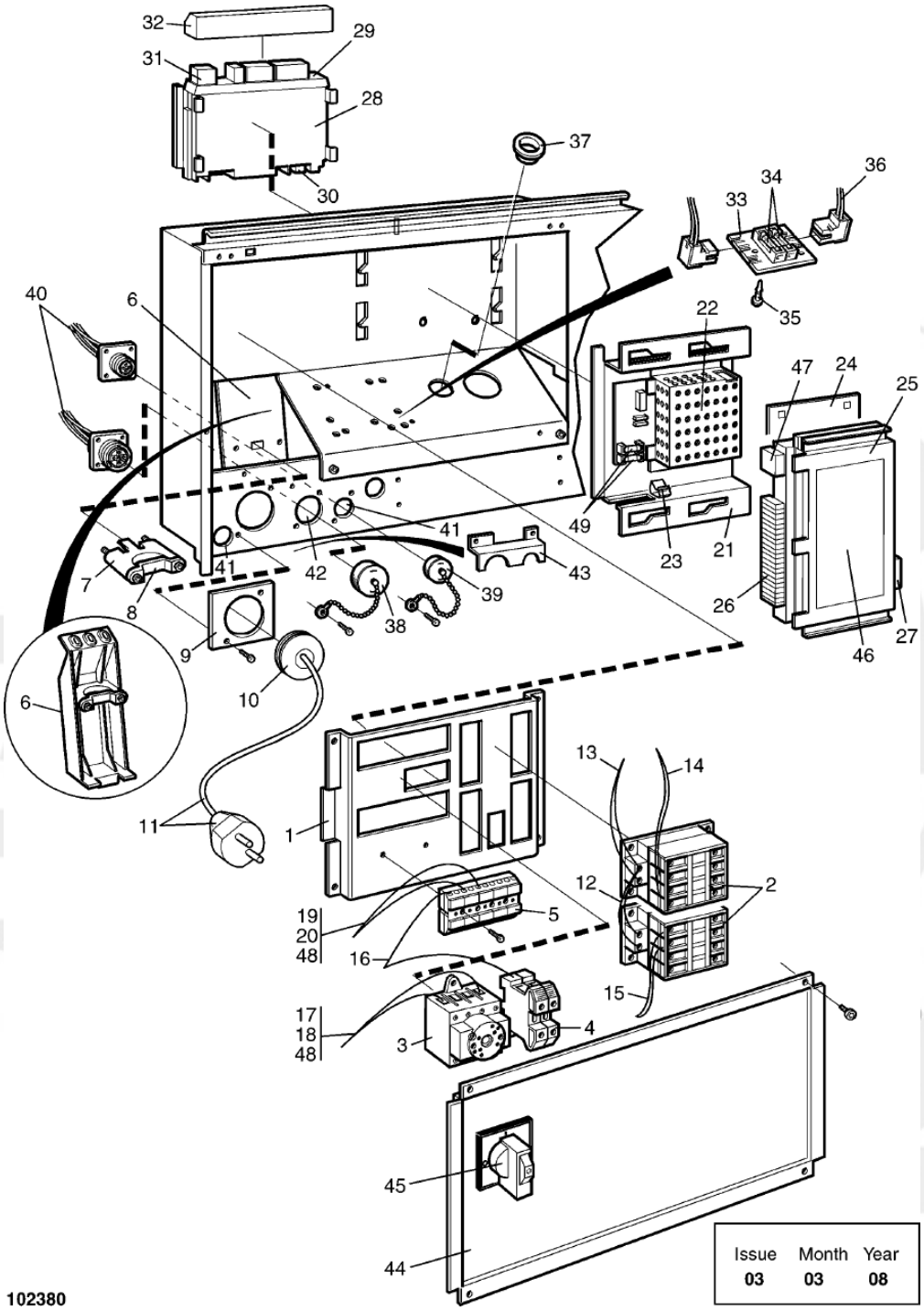

Issue	Month	Year
03	03	08

Pos	Qty	Part.no	Description	Beskrivning	Notes
42	1	471797704	Blind plug	Blindpropp	Ø28
43	1	432122001	Cover	Skydd	
44	1	432360401	Cover	Lock	With hole
44	1	432360402	Cover	Lock	Without hole
45	1	471967894	Turning device	Vriddon	
46	1	471467393	Sign	Skylt	I/O-card type 2
47	1	413308402	Cable set	Ledningssats	P-bus 4-pole
48	1	413291804	Cable set	Ledningssats	Trafo and choke 2-pole
49	2	471875016	Fuse	Säkring	3,15A

info@zipnasklade.ru
8(800)500-69-51

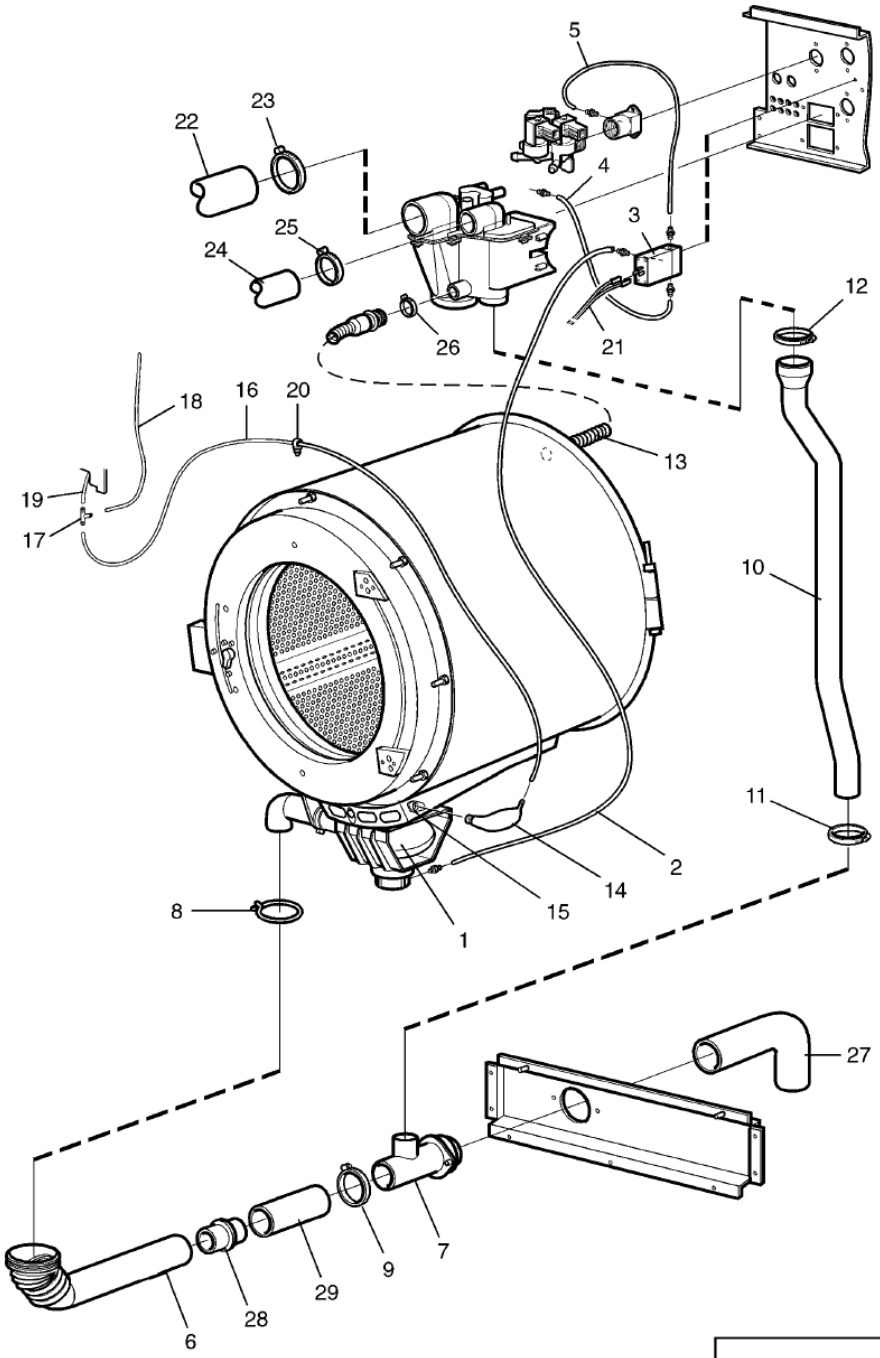

Issue	Month	Year
01	06	07

102485

W4130H Compass
Drain valve and hoses
Avloppsventil och slangar

Illustration Illustration	Issue Utgåva	Month Månad	
102485/1	**10**	**5**	**2016**

Pos	Qty	Part.no	Description	Beskrivning	Notes
1	1	432250201	Drain valve	Avloppsventil	
2	1	471813911	Hose	Slang	L=1900
3	1	471824307	Solenoid valve	Magnetventil	230V 50Hz
3	1	471824308	Solenoid valve	Magnetventil	208-240V 60Hz
3	1	471824309	Solenoid valve	Magnetventil	120V 60Hz
3	1	471824310	Solenoid valve	Magnetventil	Japan 230V 50/60Hz
4	1	438810206	Hose	Slang	L=450
5	1	471813901	Hose	Slang	L=330
6	1	432251602	Hose	Slang	
7	1	432251101	Drain pipe connection	Avloppsstos	
8	1	471787107	Hose clamp	Slangklämma	
9	1	736284051	Hose clamp	Slangklämma	Ø50-63
10	1	432252802	Hose	Slang	L=750mm
11	1	736284051	Hose clamp	Slangklämma	Ø50-63
12	1	736283751	Hose clamp	Slangklämma	Ø48-54
13	1	432250802	Hose	Slang	
14	1	432250701	Air tube	Luftklocka	
15	1	432250601	Connection	Anslutning	
16	1	438812002	Hose	Slang	L=1325
17	1	471226569	T-pipe	T-rör	
18	1	471244242	Hose	Slang	L=120
19	1	471246418	Hose	Slang	L=280
20	3	471788701	Clip	Clips	
21	1	432318241	Cable set	Ledningssats	
22	1	471812860	Hose	Slang	
23	2	736284051	Hose clamp	Slangklämma	Ø50-63
24	1	471812402	Hose	Slang	
25	2	736283151	Hose clamp	Slangklämma	Not used Ø36-42
26	1	736282551	Hose clamp	Slangklämma	Not used Ø32
27	1	471483501	Drain hose	Avloppsslang	Ø75

info@zipnasklade.ru
8(800)500-69-51

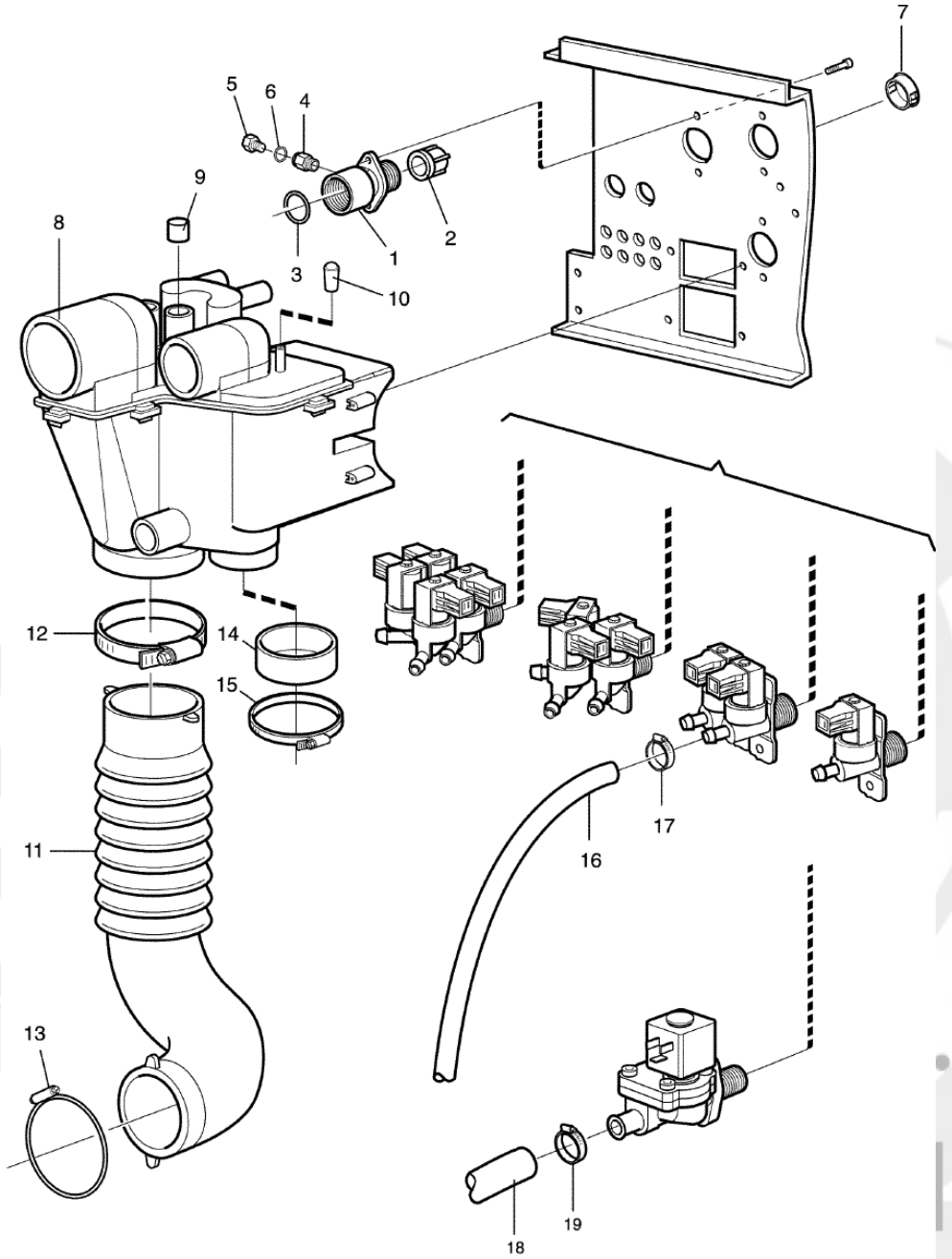

Issue	Month	Year
02	02	12

102316

W4130H Compass
Water connections
Vattenanslutningar

Illustration Illustration	Issue Utgåva	Month Månad	
102316/1	**4**	**4**	**2012**

Pos	Qty	Part.no	Description	Beskrivning	Notes
1	1	438005603	Nipple	Nippel	Black, 3/4"
1	1	438005604	Nipple	Nippel	White, 3/4", USA
2	1	471869321	Filter	Filter	
3	1	471819901	Gasket	Packning	
4	1	471868813	Nipple	Nippel	1/8''
5	1	741510925	Plug	Propp	El-drain
6	1	740420600	O-ring	O-ring	El-drain
7	Rq	471797704	Blind plug	Blindpropp	Ø28
8	1	432230101	Siphon breaker	Återsugningsskydd	
9	Rq	471817501	Plug	Plugg	
10	1	471864402	Plug	Propp	
11	1	432230601	Hose	Slang	
12	1	736284651	Hose clamp	Slangklämma	Ø73-83
13	1	471787104	Hose clamp	Slangklämma	
14					Not used
15					Not used
16	Rq	877521108	Hose	Slang	Per 1 m
17	Rq	736281651	Hose clamp	Slangklämma	Ø13-19
18					Not used
19					Not used

info@zipnasklade.ru
8(800)500-69-51

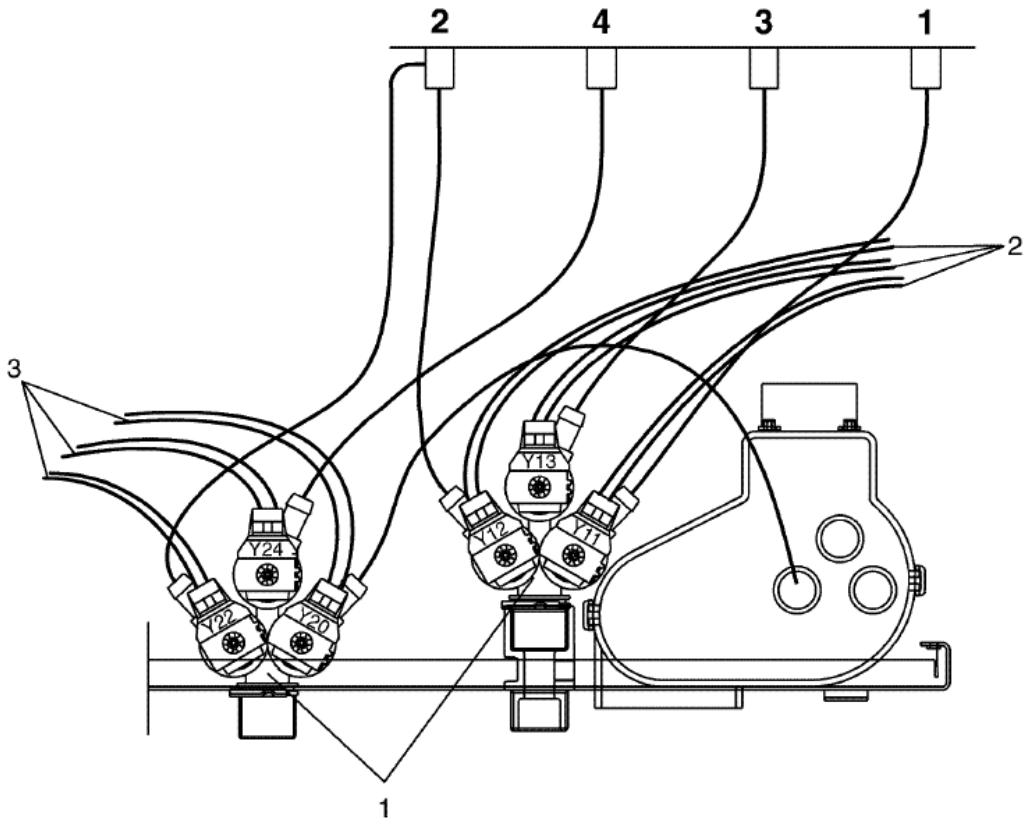

Issue	Month	Year
01	12	06

102482

W4130H Compass
Inlet valves and cable set
Inloppsventiler och ledningssatser

Illustration Illustration	Issue Utgåva	Month Månad	
102482/1	**2**	**11**	**2009**

Pos	Qty	Part.no	Description	Beskrivning	Notes
1	2	471823676	Valve	Ventil	3-way, 208-240V 50/60Hz, BSP
1	2	471823678	Valve	Ventil	US 3-way, 208-240V 50/60Hz, NH USA
2	1	413308607	Cable set	Ledningssats	Cold
3	1	413308608	Cable set	Ledningssats	Hot

info@zipnasklade.ru
8(800)500-69-51

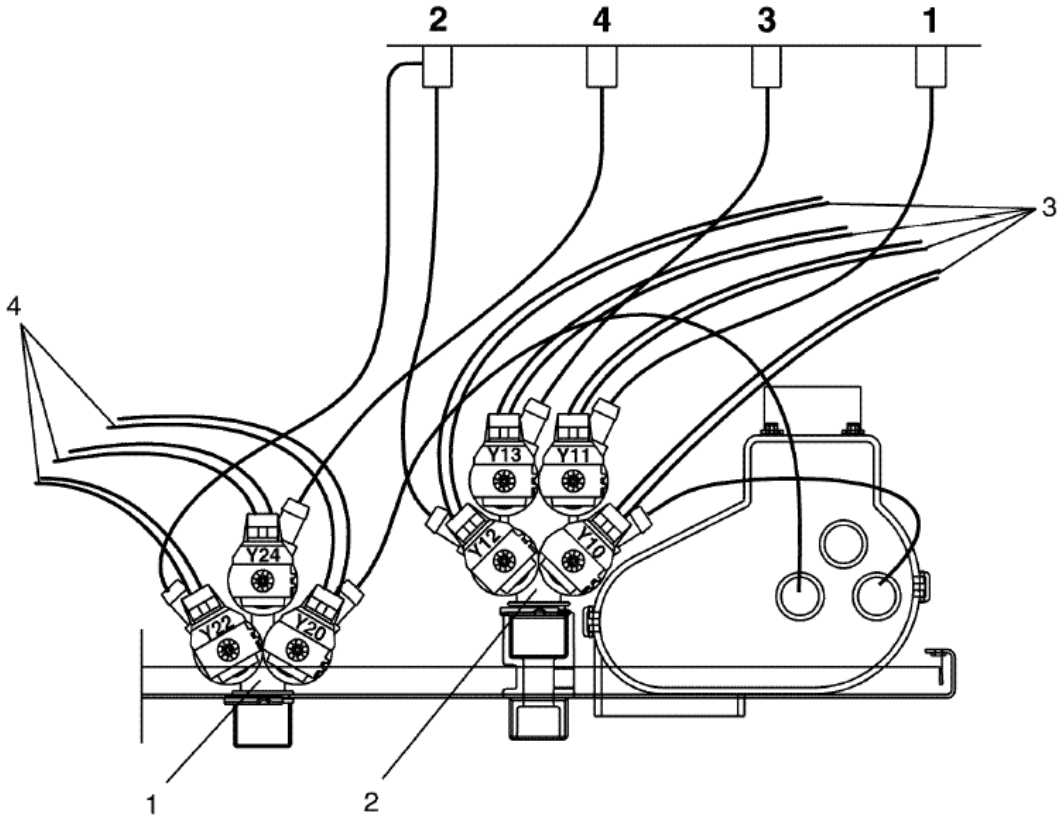

Issue	Month	Year
01	12	06

102483

W4130H Compass
Inlet valves and cable set
Inloppsventiler och ledningssatser

Illustration Illustration	Issue Utgåva	Month Månad	
102483/1	**2**	**11**	**2009**

Pos	Qty	Part.no	Description	Beskrivning	Notes
1	1	471823676	Valve	Ventil	3-way, 208-240V 50/60Hz, BSP
1	1	471823678	Valve	Ventil	US 3-way, 208-240V 50/60Hz, NH USA
2	1	471824064	Valve	Ventil	4-way, 208-240V 50/60Hz, BSP
2	1	471824068	Valve	Ventil	US 4-way, 208-240V 50/60Hz, NH USA
3	1	413308807	Cable set	Ledningssats	
4	1	413308608	Cable set	Ledningssats	

info@zipnasklade.ru
8(800)500-69-51

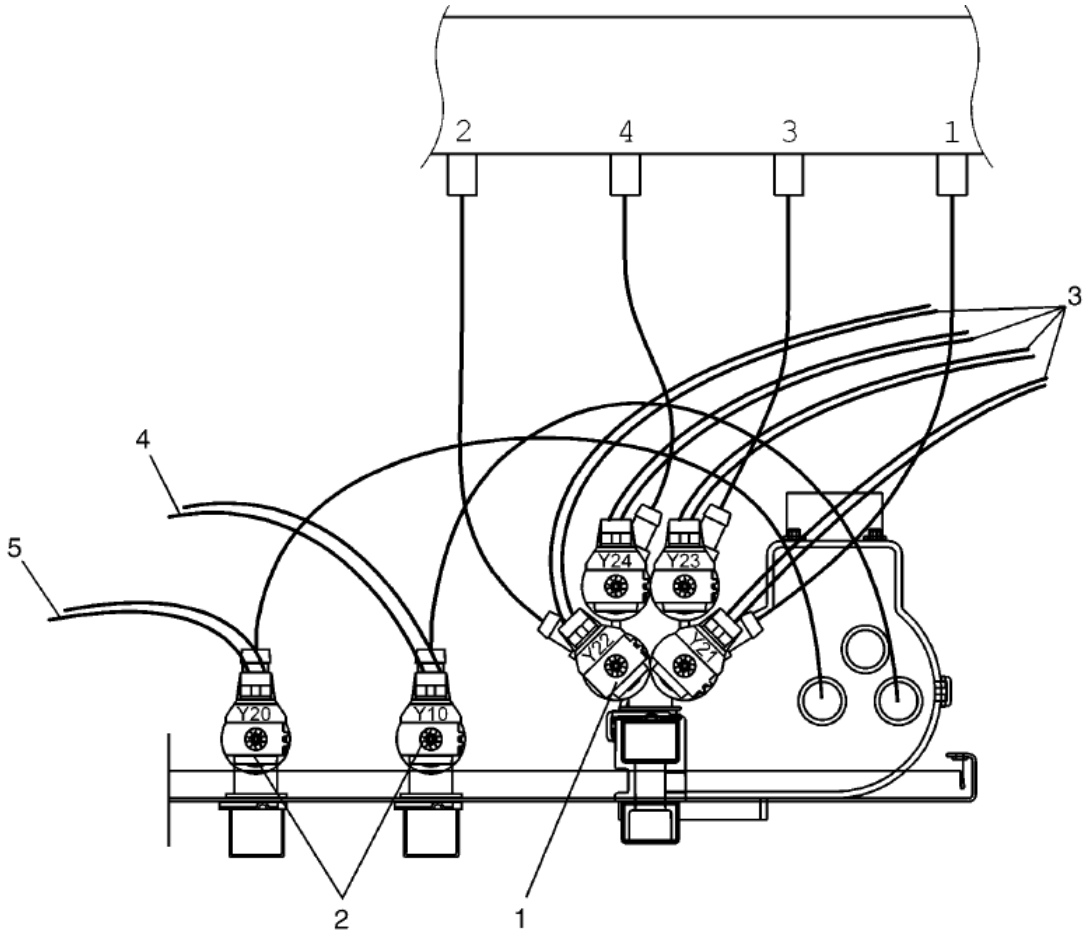

Issue	Month	Year
01	12	06

102384

W4130H Compass
Inlet valves and cable set
Inloppsventiler och ledningssatser

Illustration Illustration	Issue Utgåva	Month Månad	
102384/1	**2**	**11**	**2009**

Pos	Qty	Part.no	Description	Beskrivning	Notes
1	1	471824063	Valve	Ventil	4-way, 208-240V 50/60Hz, BSP
1	1	471824069	Valve	Ventil	USA 4-way, 208-240V 50/60Hz, NH USA
2	2	471823452	Valve	Ventil	1-way, 208-240V 50/60Hz, BSP
2	2	471823464	Valve	Ventil	USA 1-way, 208-240V 50/60Hz, NH USA
3	1	413308807	Cable set	Ledningssats	Cold
4	1	413308229	Cable set	Ledningssats	Cold
5	1	413308230	Cable set	Ledningssats	Hot

info@zipnasklade.ru
8(800)500-69-51

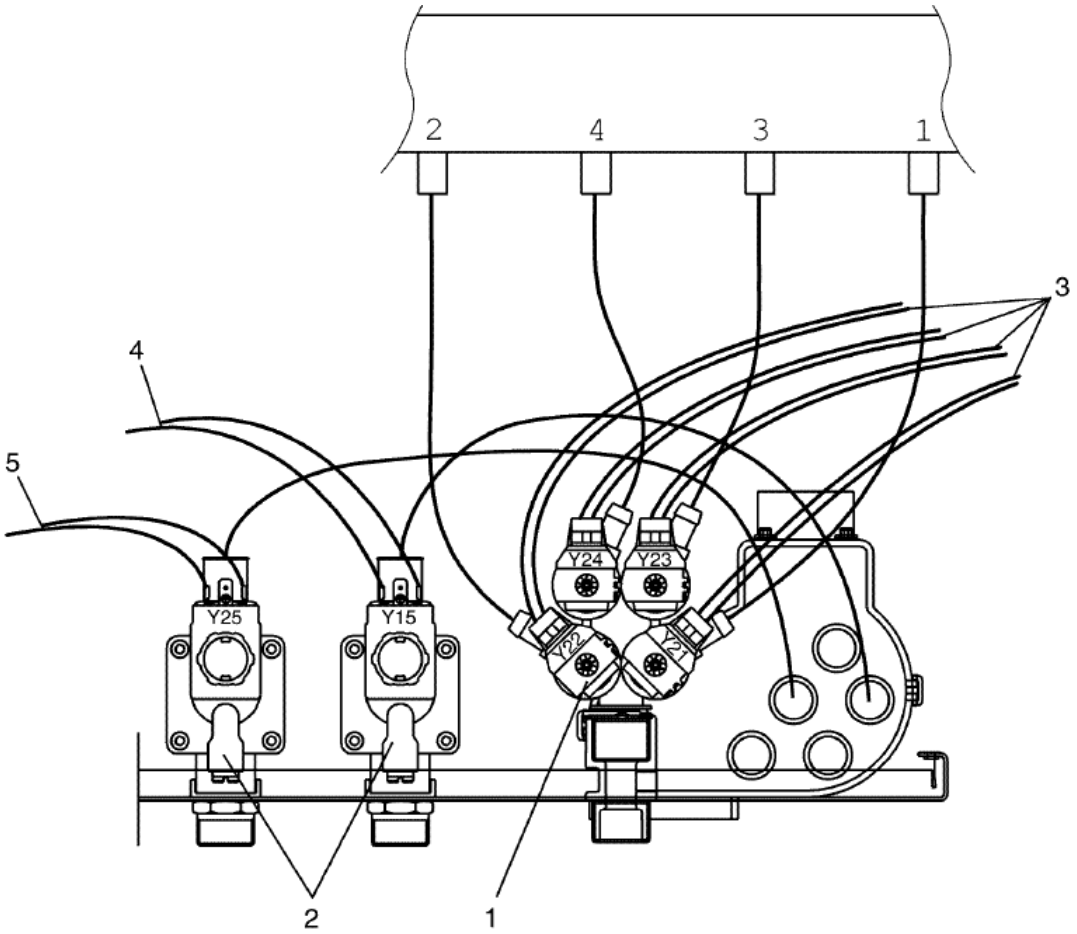

Issue	Month	Year
01	12	06

102383

W4130H Compass
Inlet valves and cable set
Inloppsventiler och ledningssatser

Illustration	Issue	Month	
Illustration	Utgåva	Månad	
102383/1	**3**	**11**	**2009**

Pos	Qty	Part.no	Description	Beskrivning	Notes
1	1	471824063	Valve	Ventil	4-way, 208-240V 50/60Hz, BSP
1	1	471824069	Valve	Ventil	USA 4-way, 208-240V 50/60Hz, NH USA
2	2	471821070	Valve	Ventil	208-240V 50/60Hz, BSP
2	1	471821079	• *Coil*	• *Spole*	50/60 Hz
2	2	471821071	Valve	Ventil	USA 208-240V 60Hz, NH USA
2	1	471821078	• *Coil*	• *Spole*	60Hz
3	1	413308808	Cable set	Ledningssats	
4	1	413318209	Cable set	Ledningssats	
5	1	413318210	Cable set	Ledningssats	

info@zipnasklade.ru
8(800)500-69-51

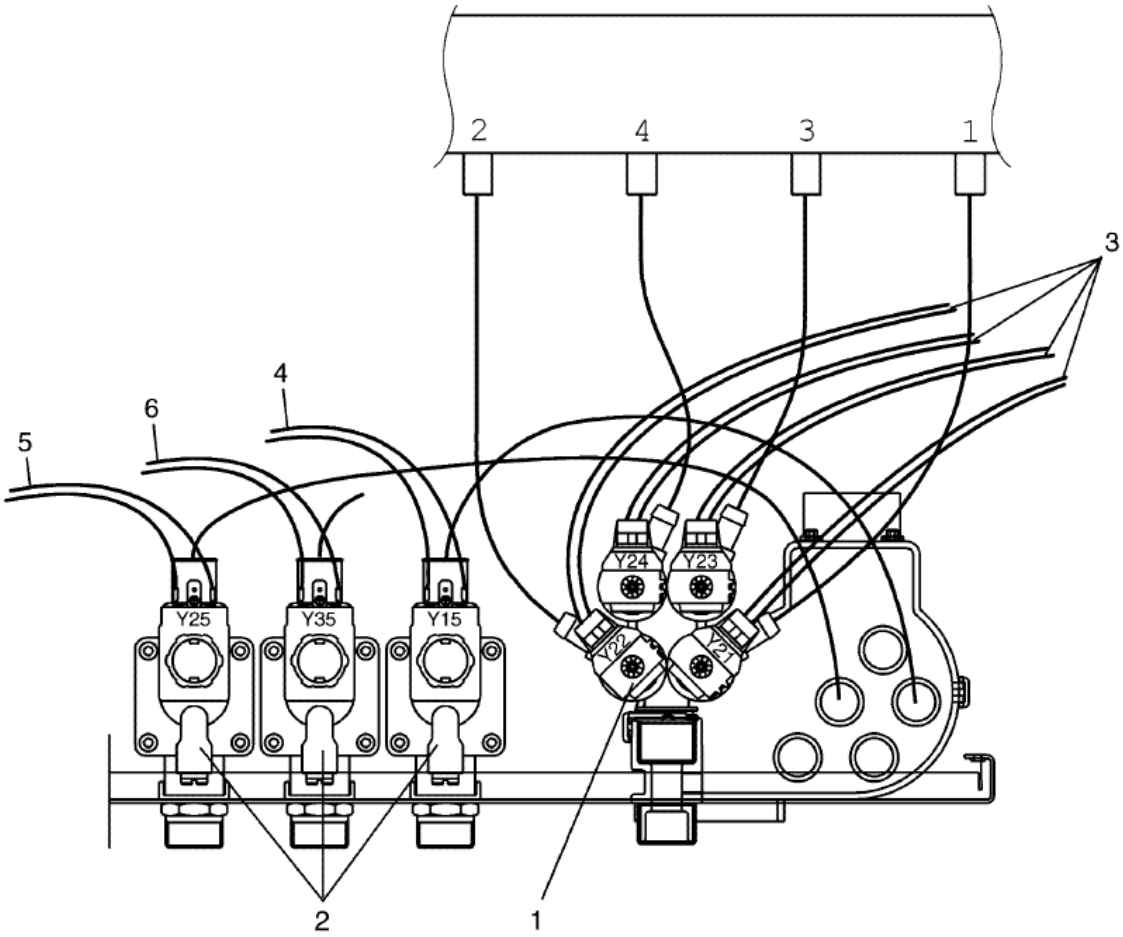

Issue	Month	Year
01	12	06

102385

W4130H Compass
Inlet valves and cable set
Inloppsventiler och ledningssatser

Illustration Illustration	Issue Utgåva	Month Månad	
102385/1	**3**	**11**	**2009**

Pos	Qty	Part.no	Description	Beskrivning	Notes
1	1	471824063	Valve	Ventil	4-way, 208-240V 50/60Hz, BSP
1	1	471824069	Valve	Ventil	USA 4-way, 208-240V 50/60Hz, NH USA
2	3	471821070	Valve	Ventil	208-240V 50/60Hz, BSP
2	1	471821079	• *Coil*	• *Spole*	50/60 Hz
2	3	471821071	Valve	Ventil	USA 208-240V 60Hz, NH USA
2	1	471821078	• *Coil*	• *Spole*	60Hz
3	1	413308808	Cable set	Ledningssats	
4	1	413318209	Cable set	Ledningssats	
5	1	413318210	Cable set	Ledningssats	
6	1	413318211	Cable set	Ledningssats	

info@zipnasklade.ru
8(800)500-69-51

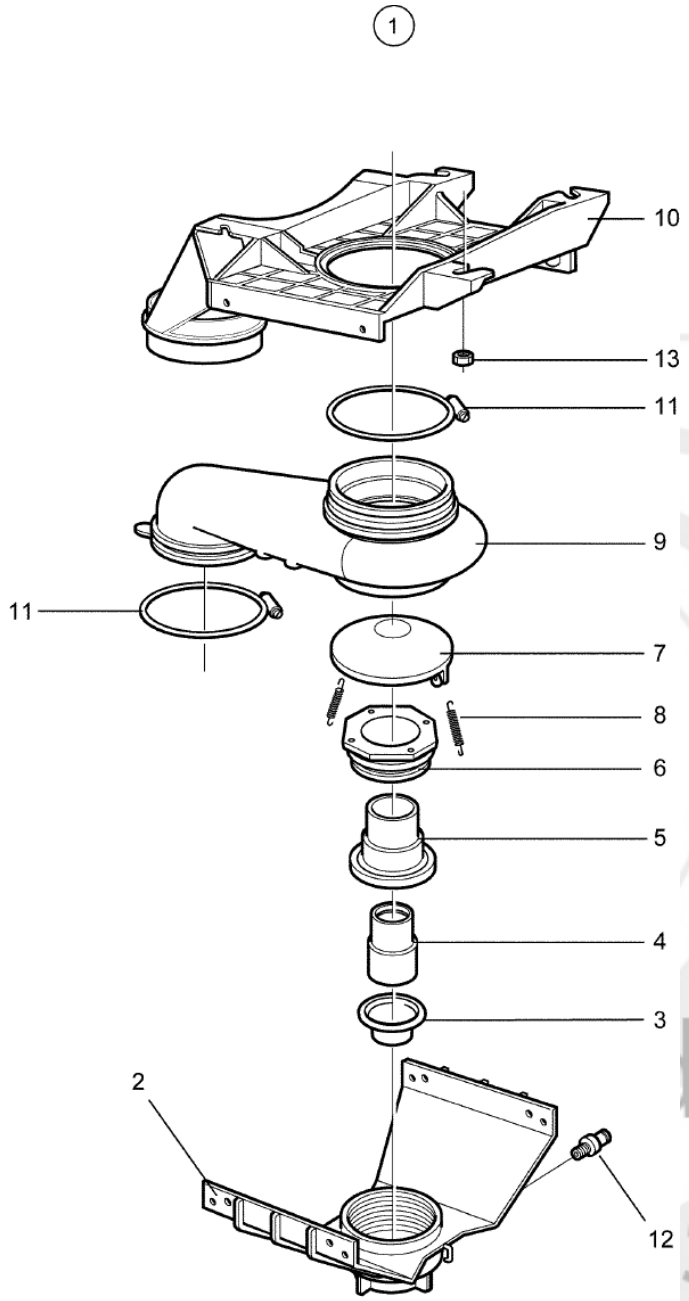

102343_02

W4130H Compass
Drain valve
Avloppsventil

Illustration	Issue	Month	
Illustration	Utgåva	Månad	
102343/1	**3**	**12**	**2013**

Pos	Qty	Part.no	Description	Beskrivning	Notes
1	1	432250201	Drain valve	Avloppsventil	
2	1	438005101	• *Lower frame*	• *Underdel*	
3	1	471819501	• *Diaphragm*	• *Membran*	
4	1	438005401	• *Piston*	• *Kolv*	
5	1	438005301	• *Housing*	• *Hus*	
6	1	438005501	• *Gland*	• *Gland*	
7	1	438005201	• *Cover*	• *Lock*	
8	2	471781801	• *Spring*	• *Fjäder*	
9	1	432250501	• *Hose housing*	• *Slanghus*	
10	1	432250101	• *Upper frame*	• *Överdel*	
11	2	471787104	• *Hose clamp*	• *Slangklämma*	
12	1	471868813	• *Nipple*	• *Nippel*	1/8''
13	4	471840403	Nut	Mutter	M6 Stainless

info@zipnasklade.ru
8(800)500-69-51

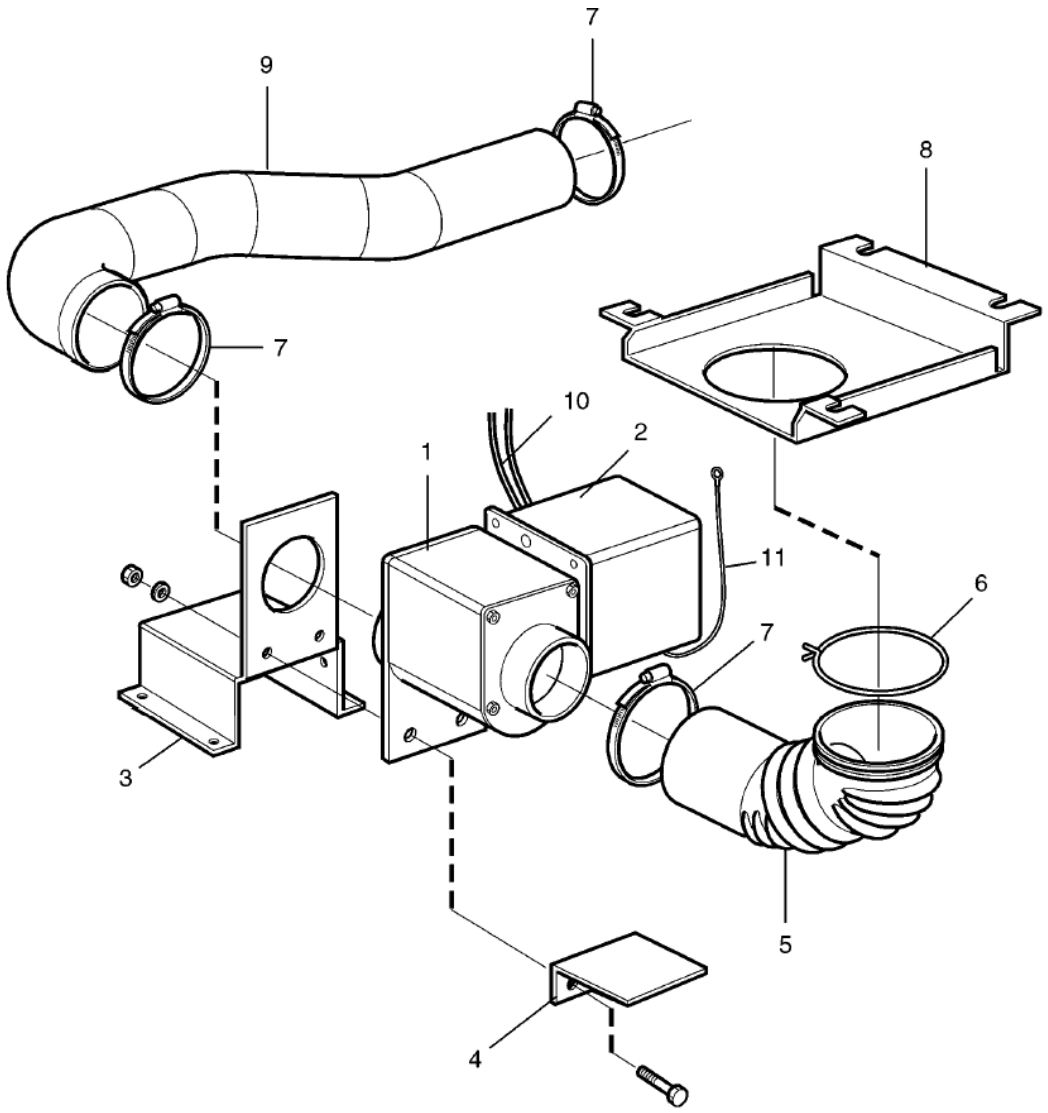

Issue	Month	Year
01	01	07

102492

W4130H Compass
Drain valve, electrical
Avloppsventil, elektrisk

Illustration Illustration	Issue Utgåva	Month Månad	
102492/1	**1**	**1**	**2007**

Pos	Qty	Part.no	Description	Beskrivning	Notes
1	1	471821501	Drain valve	Avloppsventil	50/60Hz
1	1	471821503	Drain valve	Avloppsventil	50/60Hz Normally closed
2	1	432254801	Cover	Kåpa	
3	1	432253101	Mounting plate	Fästplåt	
4	1	432253701	Support	Stöd	
5	1	432251604	Hose	Slang	
6	1	471787107	Hose clamp	Slangklämma	
7	3	736284651	Hose clamp	Slangklämma	Ø73-83
8	1	432253401	Mounting plate	Fästplåt	
9	1	432251801	Hose	Slang	
10	1	413290206	Cable set	Ledningssats	
11	1	432298210	Ground cable	Jordkabel	

info@zipnasklade.ru
8(800)500-69-51

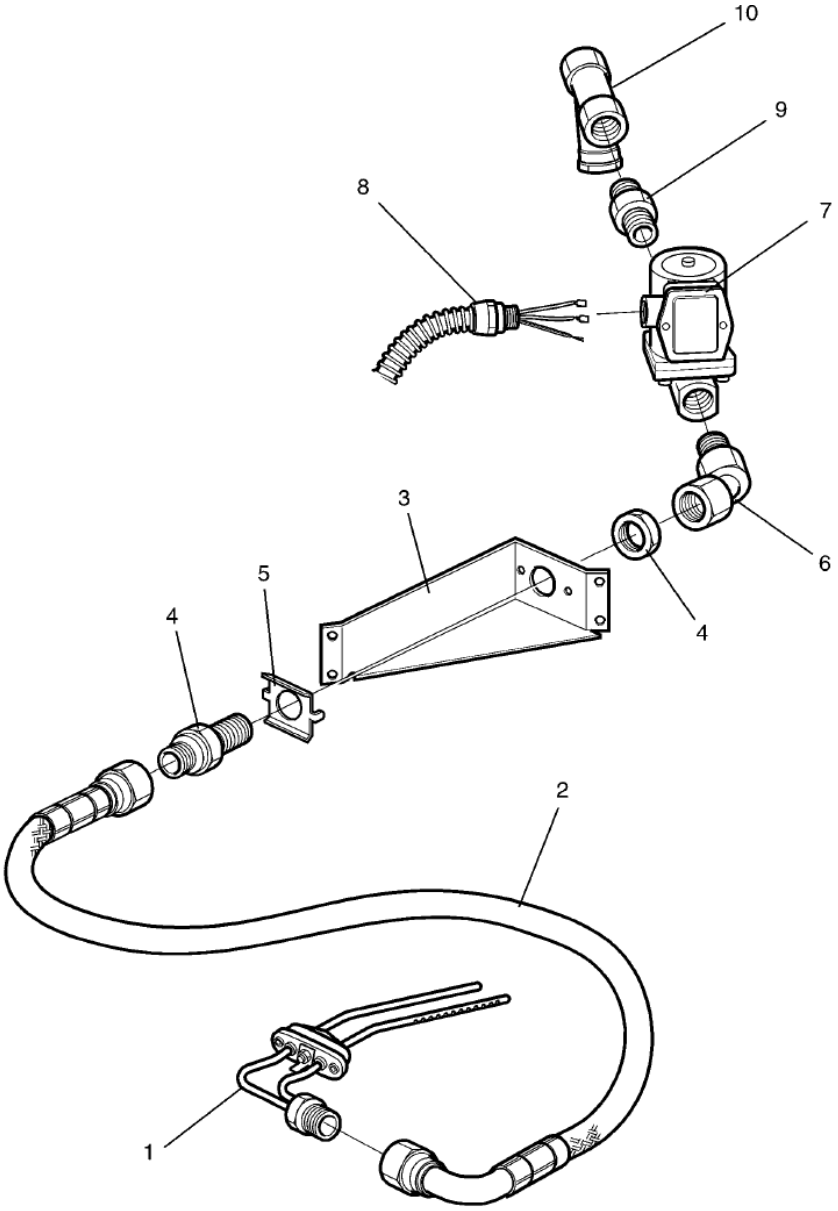

Issue	Month	Year
01	01	07

102501

W4130H Compass
Steam components
Ångdetaljer

Illustration Illustration	Issue Utgåva	Month Månad	
102501/1	**3**	**11**	**2012**

Pos	Qty	Part.no	Description	Beskrivning	Notes
1	1	432163101	Steam injector	Ånginjektor	
2	1	471812627	Steam hose	Ångslang	
3	1	432167301	Bracket	Konsol	
4	1	471869501	Nipple	Nippel	
5	1	471293701	Bracket	Vridskydd	
6	1	471869701	Adapter	Adapter	
7	1	471827903	Valve	Ventil	50/60 Hz
7	1	471827908	• *Repair kit*	• *Reparationsats*	
8	1	432305803	Cable set	Ledningssats	
9	1	471862401	Nipple	Nippel	1/2''
10	1	744311306	Filter	Filter	1/2''

info@zipnasklade.ru
8(800)500-69-51

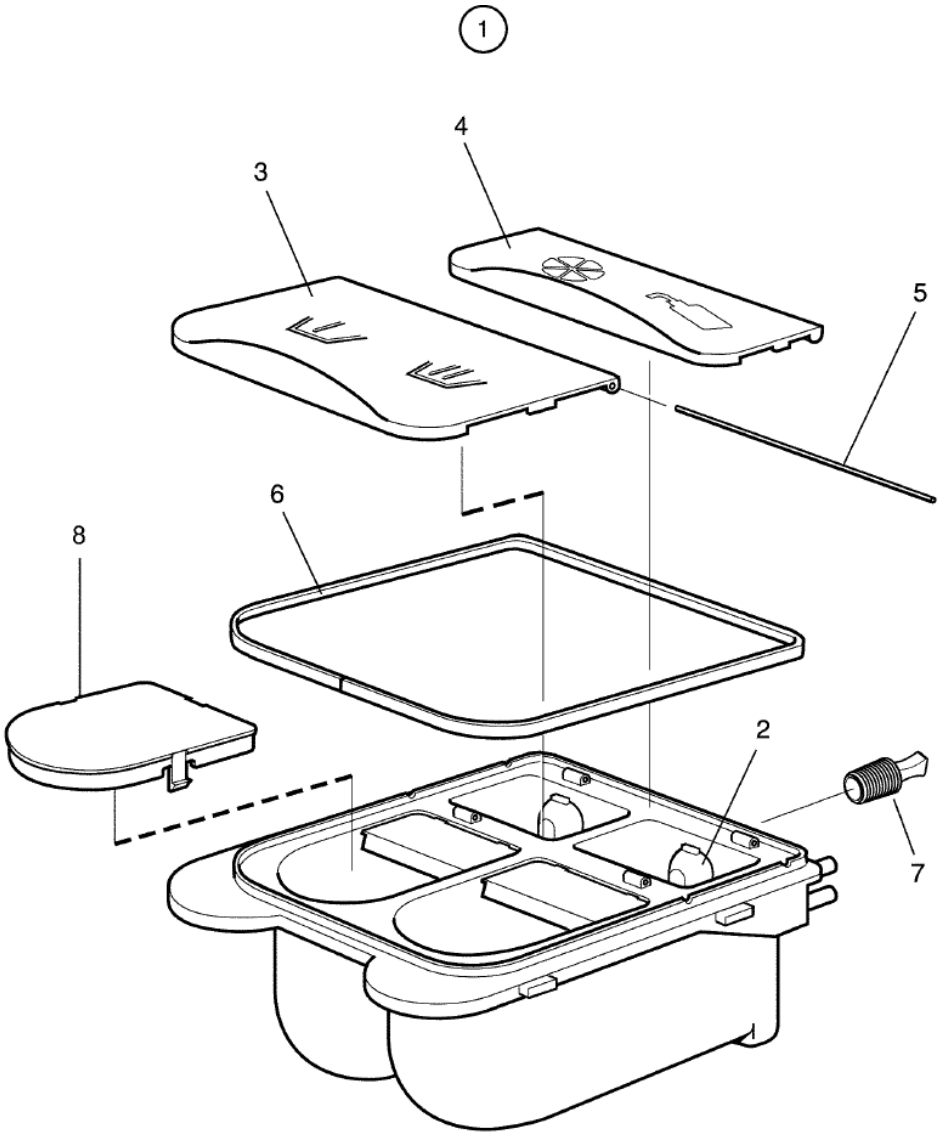

Issue	Month	Year
02	**04**	**13**

102344

W4130H Compass
Detergent container
Tvättmedelsbehållare

Illustration	Issue	Month	
Illustration	Utgåva	Månad	
102344/1	**3**	**4**	**2013**

Pos	Qty	Part.no	Description	Beskrivning	Notes
1	1	472995401	Detergent container	Tvättmedelsbehållare	USA
1	1	472995403	Detergent container	Tvättmedelsbehållare	
2	2	432240451	• *Siphon*	• *Hävert*	
3	1	432240502	• *Cover*	• *Lock*	
4	1	432240602	• *Cover*	• *Lock*	
5	2	432240701	• *Shaft*	• *Axel*	
6	1	432241201	• *Gasket*	• *Packning*	
7	1	432241301	• *Rubber plug*	• *Gummiplugg*	
8	1	432240901	Cover	Kåpa	

info@zipnasklade.ru
8(800)500-69-51

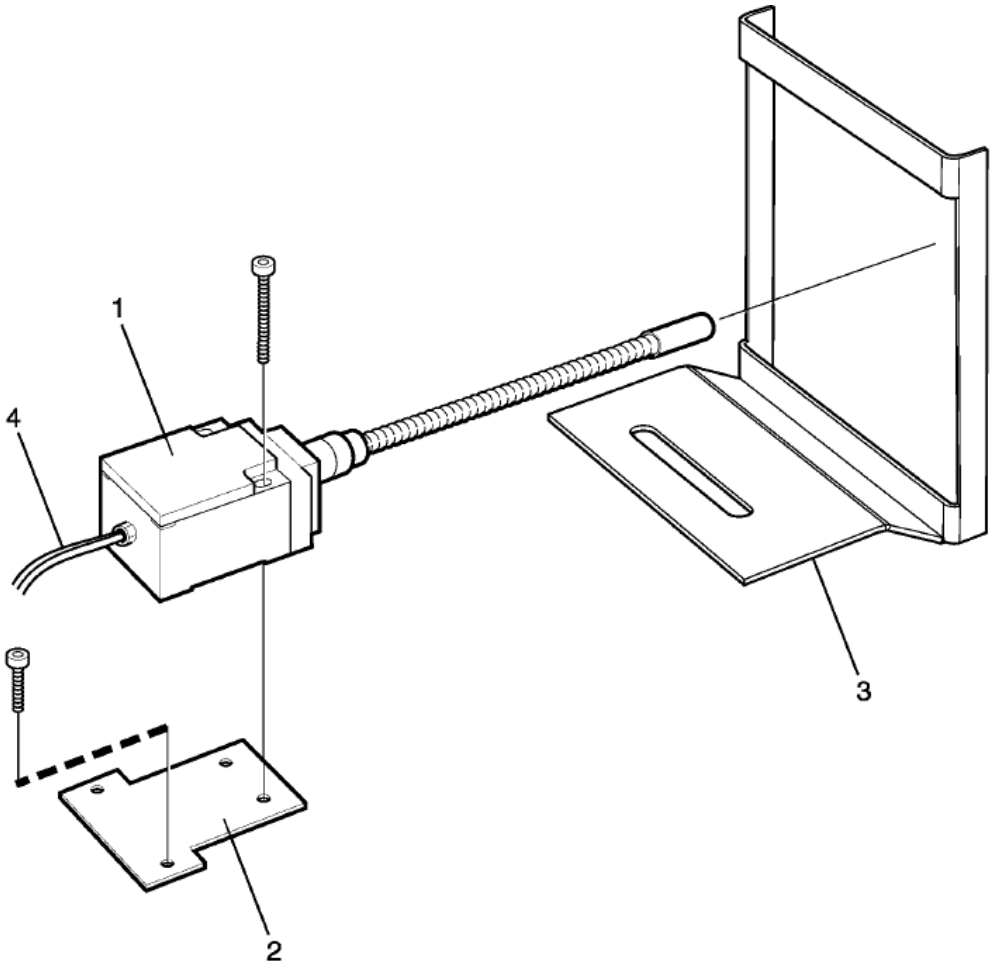

Issue	Month	Year
01	10	09

102676

W4130H Compass
Out of balance switch
Obalansbrytare

Illustration Illustration	Issue Utgåva	Month Månad	
102676/0	**1**	**10**	**2009**

Pos	Qty	Part.no	Description	Beskrivning	Notes
1	1	471960801	Out of balance switch	Obalansbrytare	
2	1	432218301	Mounting plate	Monteringsplåt	
3	1	432218401	Frame	Ram	
4	1	432298701	Cable set	Ledningssats	

info@zipnasklade.ru
8(800)500-69-51

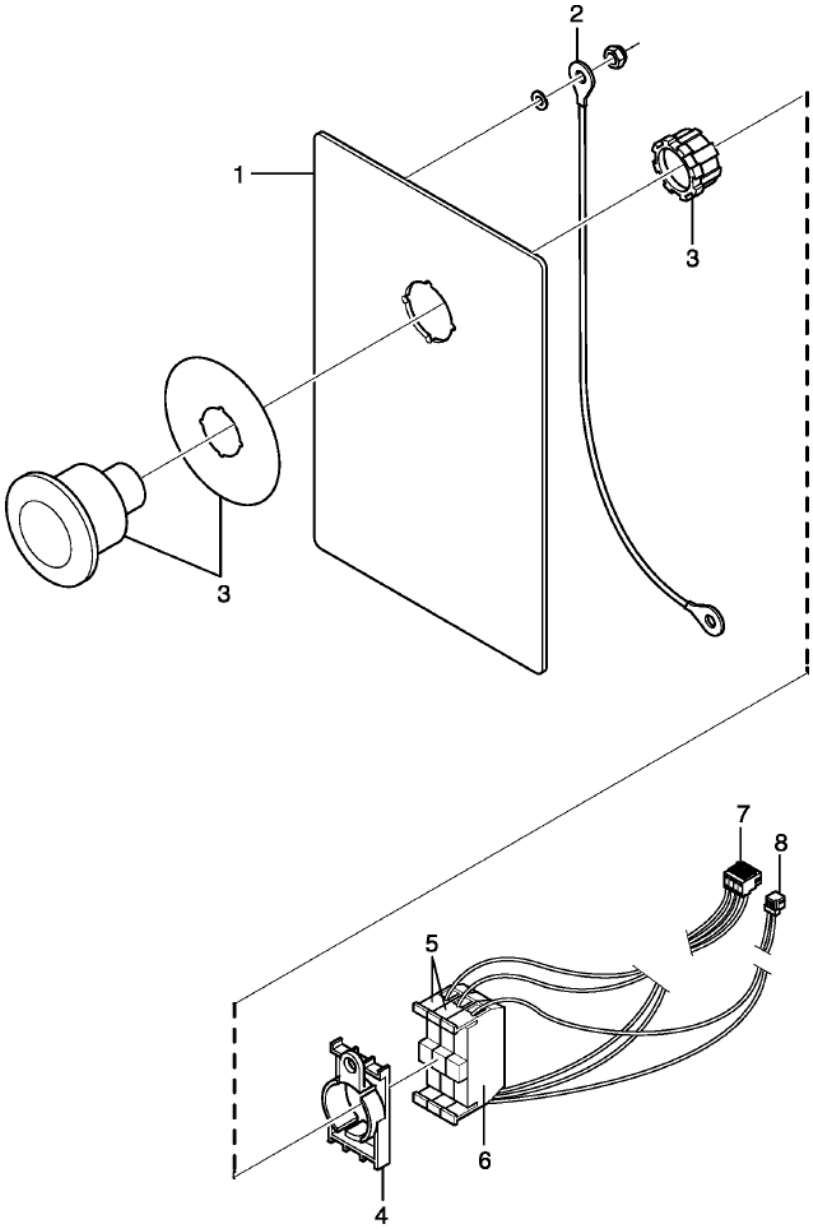

Issue	Month	Year
01	01	09

102596

W4130H Compass
Emergency stop
Nödstopp

Illustration Illustration	Issue Utgåva	Month Månad	
102596/0	**1**	**1**	**2009**

Pos	Qty	Part.no	Description	Beskrivning	Notes
1	1	432215012	Cover plate	Täckplåt	
2	1	432298220	Cable set	Ledningssats	
3	1	471962832	Push-button	Tryckknapp	
4	1	471962875	Connector for contact block	Hållare för kontaktblock	
5	2	471962870	Contact block	Kontaktblock	Red
6	1	471962871	Socket	Kontaktblock	NO Green
7	1	413318416	Cable set	Ledningssats	
8	1	413327219	Cable set	Ledningssats	2-pole

info@zipnasklade.ru
8(800)500-69-51

info@zipnasklade.ru
8(800)500-69-51

W4130H Compass
Key switch
Nyckelbrytare

Illustration Illustration	Issue Utgåva	Month Månad	
102663/0	**1**	**3**	**2009**

Pos	Qty	Part.no	Description	Beskrivning	Notes
1	1	432215012	Cover plate	Täckplåt	
2	1	432298220	Cable set	Ledningssats	
3	1	471962885	Key switch	Nyckelbrytare	With key
4	1	471962875	Connector for contact block	Hållare för kontaktblock	
5	1	471962871	Socket	Kontaktblock	NO Green
6	1	413327221	Cable set	Ledningssats	2-pole

info@zipnasklade.ru
8(800)500-69-51

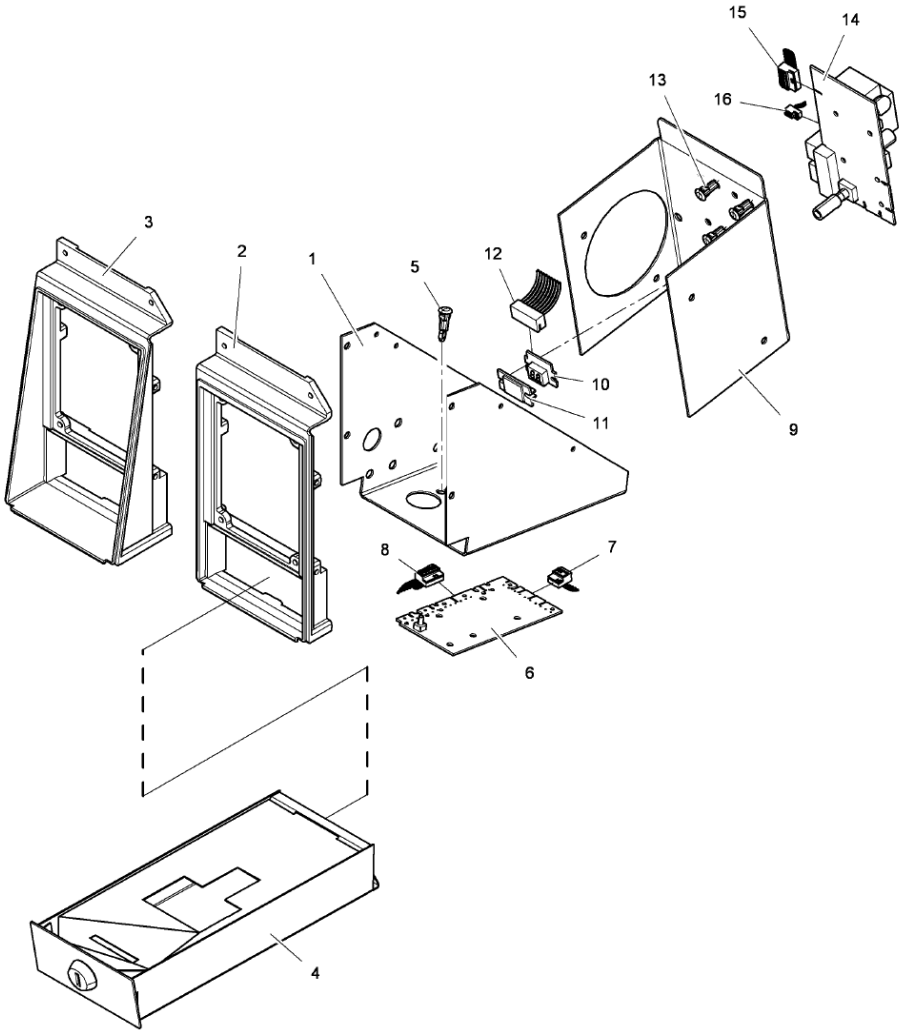

50 01 15

Issue Month Year
01 10 09

W4130H Compass
Coin box
Myntlåda

Illustration Illustration	Issue Utgåva	Month Månad	
500115/0	**2**	**9**	**2011**

Pos	Qty	Part.no	Description	Beskrivning	Notes
1	1	432218502	Bracket	Konsol	
2	1	432217412	Frame	Ram	
3	1	432217512	Frame	Ram	
4	1	432220321	Coin box	Myntlåda	Complete
4	1	432220322	Coin box	Myntlåda	Japan Complete
5	4	471795802	Spacer element	Distansstycke	
6	1	438879001	Printed circuit board	Kretskort	
6	1	438877501	Printed circuit board	Kretskort	
6	1	438877502	Printed circuit board	Kretskort	230V Blocking Electronic coin meter
6	1	438877507	Printed circuit board	Kretskort	9V Blocking Electronic coin meter
7	1	432309401	Cable set	Ledningssats	
8	1	413327601	Cable set	Ledningssats	6-pole 6-pole
9	1	432230001	Bracket	Konsol	Classic Control
10	1	438877812	Printed circuit board	Kretskort	Classic Control
11	1	438892190	Display	Display	Classic Control
12	1	413327901	Cable set	Ledningssats	Classic Control 9-POLE
13	5	471796002	Support	Stöd	Classic Control
14	1	438877801	Coin counter	Mynträknare	Classic Control 230V
14	1	438877802	Coin counter	Mynträknare	Classic Control 120V
15	1	432309615	Cable set	Ledningssats	Classic Control
16	1	432319271	Cable set	Ledningssats	Classic Control 2-pole

info@zipnasklade.ru
8(800)500-69-51

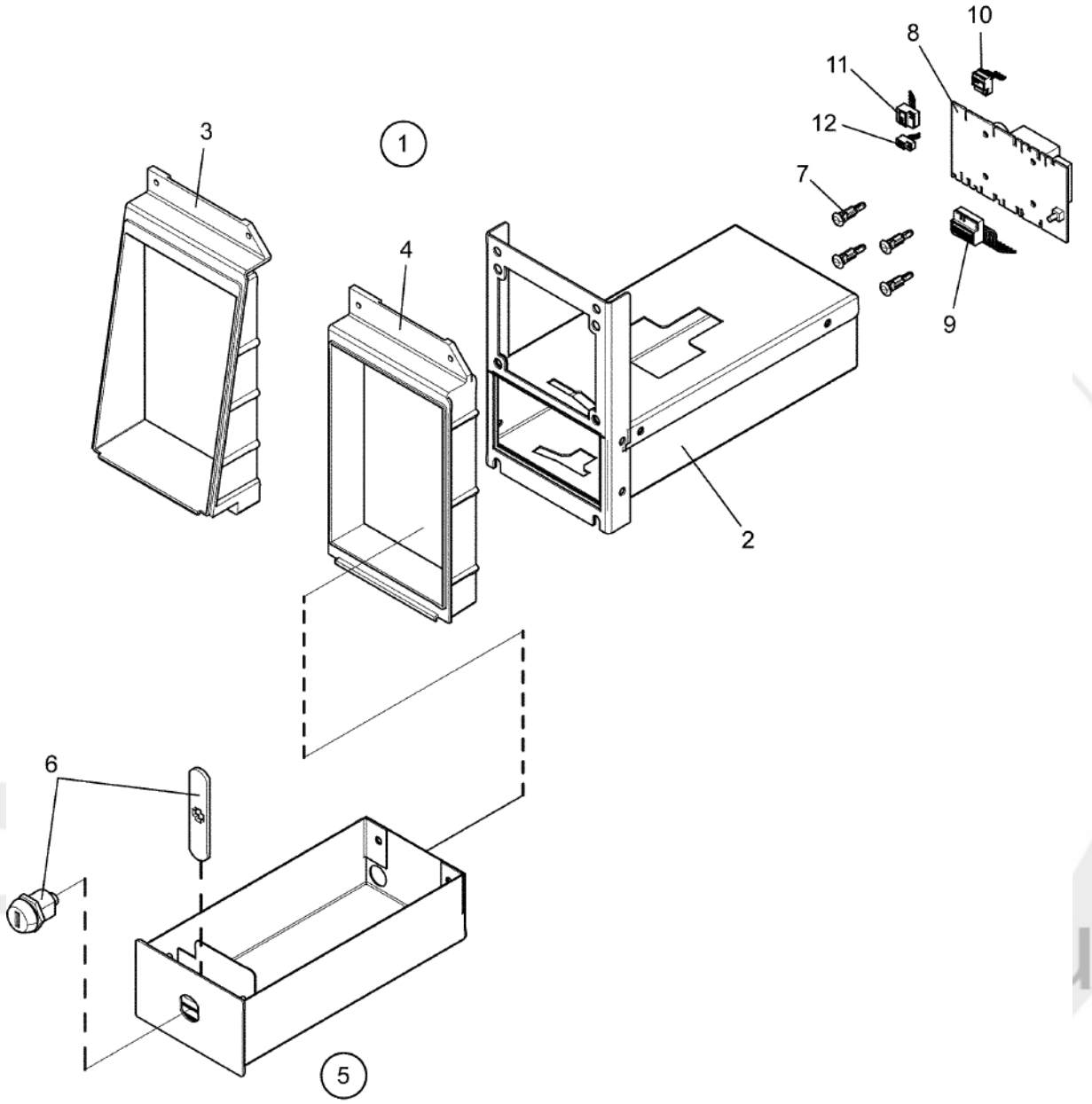

500109_02

W4130H Compass
Coin box
Myntlåda

Illustration Illustration	Issue Utgåva	Month Månad	
500109/0	**4**	**4**	**2014**

Pos	Qty	Part.no	Description	Beskrivning	Notes
1	1	432223412	Coinbox housing	Mynthus	Slanted panel Complete
1	1	432223402	Coinbox housing	Mynthus	Vertical panel Complete
2	1	432223102	• *Coinbox housing*	• *Mynthus*	
3	1	432226801	• *Frame*	• *Ram*	
4	1	432217302	• *Frame*	• *Ram*	
5	1	432223301	Coin box	Myntlåda	Complete
6	1	472991930	• *Lock*	• *Lås*	Random key
6	1	472991931	• *Lock*	• *Lås*	key 46080
6	1	472991932	• *Lock*	• *Lås*	key 46199
6	1	472991933	• *Lock*	• *Lås*	key 46819
7	4	471796002	Support	Stöd	
8	1	438877501	Printed circuit board	Kretskort	
8	1	438877507	Printed circuit board	Kretskort	9V Blocking Electronic coin meter
8	1	438879003	Printed circuit board	Kretskort	PW 9
9	1	413327601	Cable set	Ledningssats	6-pole 6-pole
9	1	432309615	Cable set	Ledningssats	PW 9
10	1	413308409	Cable set	Ledningssats	4-pole
11	1	432309401	Cable set	Ledningssats	
12	1	432309210	Cable set	Ledningssats	PW 9 2-pole

info@zipnasklade.ru
8(800)500-69-51

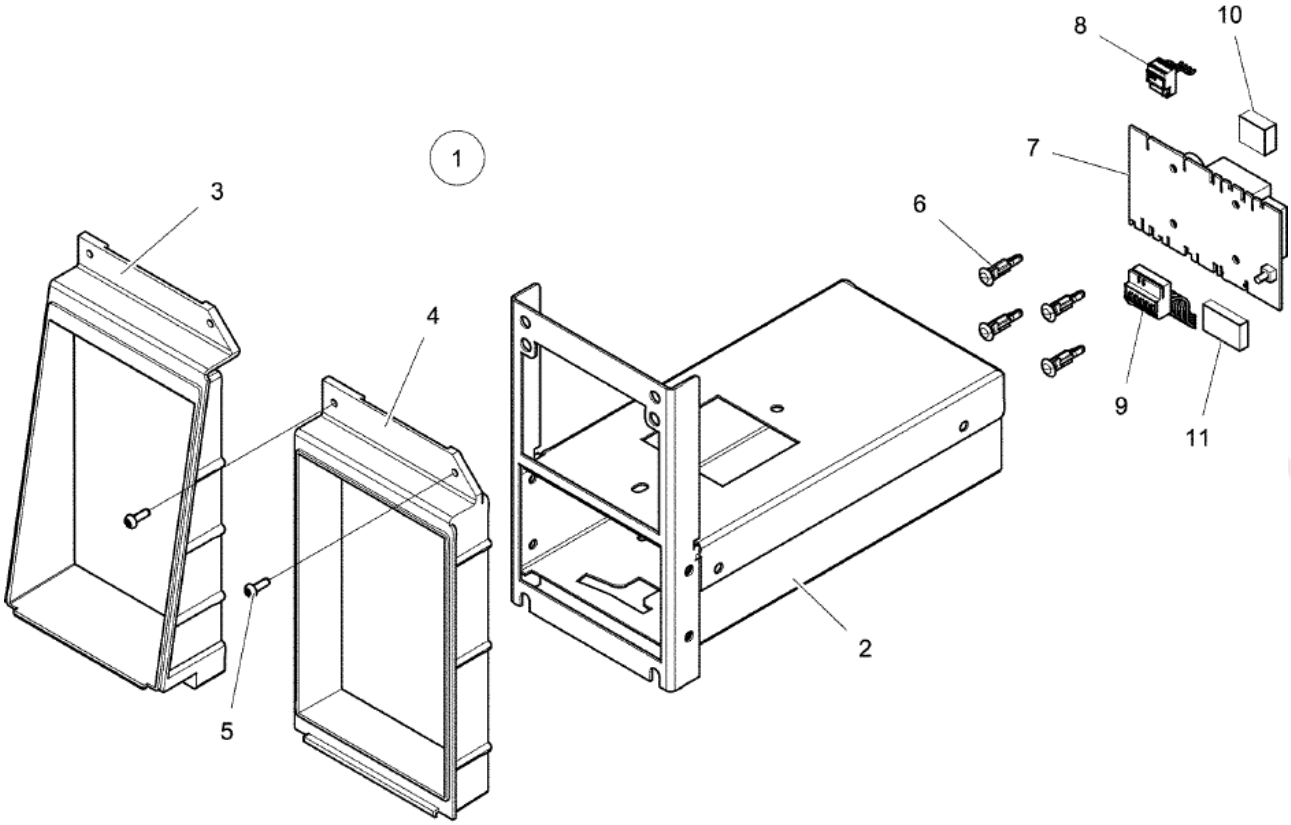

50 01 10

Issue Month Year
02 01 11

Pos	Qty	Part.no	Description	Beskrivning	Notes
1	1	432223432	Coin box	Myntlåda	Slanted panel Complete
1	1	432223422	Coin box	Myntlåda	Vertical panel Complete
2	1	432223111	• *Coin box*	• *Myntlåda*	
3	1	432226801	• *Frame*	• *Ram*	
4	1	432217302	• *Frame*	• *Ram*	
5	2	471837601	• *Screw*	• *Skruv*	M4X12
5	1	471837699	Tool	Verktyg	Tool for 471837601 Tool for 471837601
6	4	471796002	Support	Stöd	
7	1	438877501	Printed circuit board	Kretskort	
8	1	413308409	Cable set	Ledningssats	4-pole
9	1	413327601	Cable set	Ledningssats	6-pole 6-pole
10	1	438870104	Frame	Ram	2-pole
10	1	438870103	Multistik	Kantanslutning	2-pole
11	1	438870102	Frame	Ram	3-pole
11	1	438870101	Multistik	Kantanslutning	3-pole

info@zipnasklade.ru
8(800)500-69-51

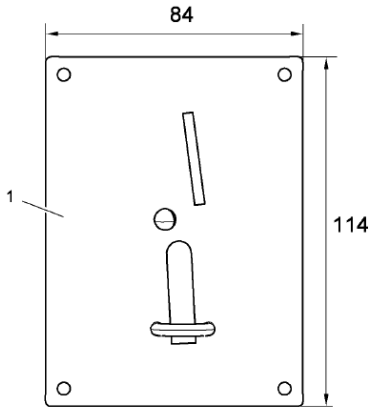

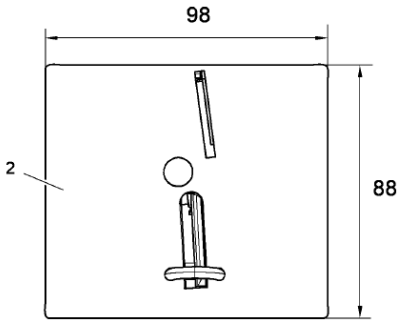

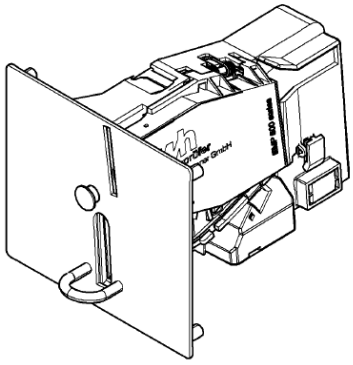

50 01 14

Issue Month Year
02 10 09

W4130H Compass
Electronic coin meter
Elektronisk myntmätare

Illustration Illustration	Issue Utgåva	Month Månad	
500114/0	**5**	**9**	**2011**

Pos	Qty	Part.no	Description	Beskrivning	Notes
1	1	438892001	Coin meter	Myntmätare	230V Blocking 2 Coins, 100+500 JPY
1	1	438892011	Coin meter	Myntmätare	9V Blocking 2 Coins, 100+500 JPY
1	1	438892002	Coin meter	Myntmätare	2 Coins, 0,5+1 NZD
2	1	438893001	Coin meter	Myntmätare	JPY+WON
2	1	438893002	Coin meter	Myntmätare	NZD+AUD
2	1	438893003	Coin meter	Myntmätare	EUR+DKK+NOK
2	1	438893004	Coin meter	Myntmätare	EUR+SEK
2	1	438893005	Coin meter	Myntmätare	HKD+TWD
2	1	438893006	Coin meter	Myntmätare	MOP+MYR+SGD
2	1	438893007	Coin meter	Myntmätare	CHF+CZK+LTL
2	1	438893008	Coin meter	Myntmätare	AED+ZAR+ILS
2	1	438893009	Coin meter	Myntmätare	GBP+EUR
2	1	438893010	Coin meter	Myntmätare	PLN+EUR
2	1	438893011	Coin meter	Myntmätare	EUR+Tokens
2	1	438893012	Coin meter	Myntmätare	CNY

info@zipnasklade.ru
8(800)500-69-51

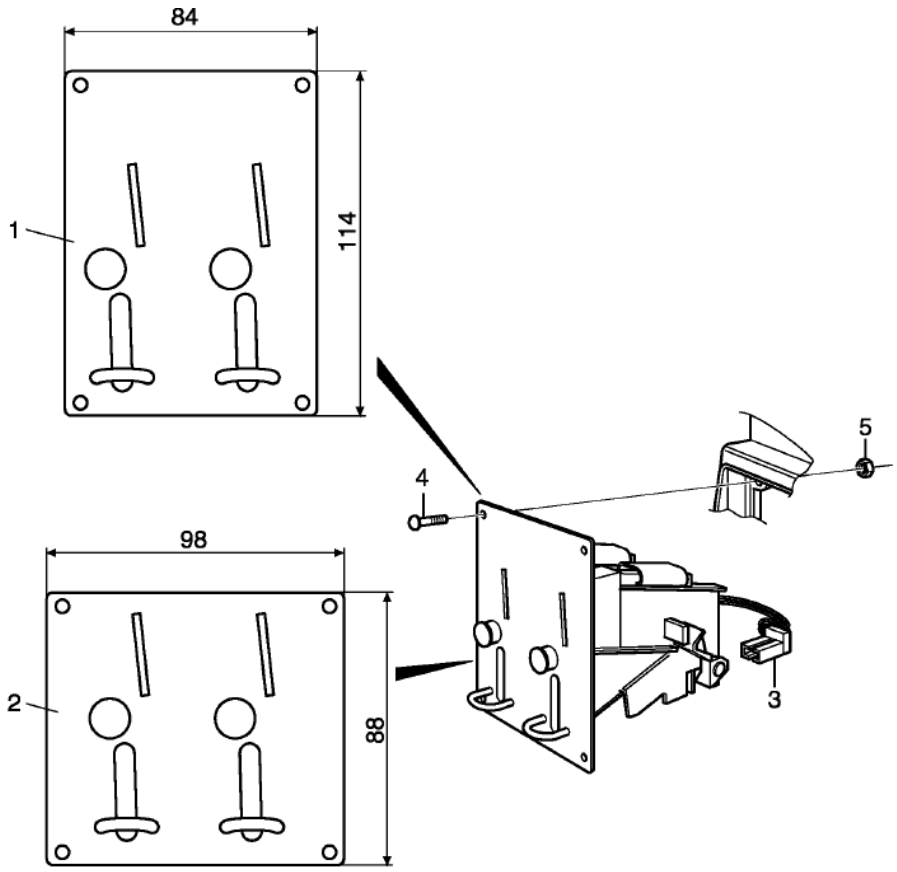

Issue	Month	Year
01	08	09

102672

W4130H Compass
Coin meter
Myntmätare

Illustration Illustration	Issue Utgåva	Month Månad	
102672/0	**7**	**11**	**2016**

Pos	Qty	Part.no	Description	Beskrivning	Notes
1	1	438892301	Coin meter	Myntmätare	A1X1-Temp. sensor
1	1	438892303	Coin meter	Myntmätare	1 Coin, 100 JPY
1	1	438892304	Coin meter	Myntmätare	2 Coins, 0,5+1 EUR
1	1	438892407	Coin meter	Myntmätare	2 Coins, 0,2 + 1 GBP
1	1	438892306	Coin meter	Myntmätare	2 Coins, 1+5 DKK
1	1	438892307	Coin meter	Myntmätare	2 Coins, 10+50 TWD
1	1	438892309	Coin meter	Myntmätare	2 Coins, 1+10 DKK
1	1	438892310	Coin meter	Myntmätare	2 Coins, 2+5 DKK
1	1	438892311	Coin meter	Myntmätare	2 Coins, 2+10 DKK
1	1	438892312	Coin meter	Myntmätare	2 Coins, 5+10 DKK
1	1	438892313	Coin meter	Myntmätare	2 Coins, 1+5 NOK
1	1	438892314	Coin meter	Myntmätare	2 Coins, 1+10 NOK
1	1	438892315	Coin meter	Myntmätare	2 Coins, 5+10 NOK
1	1	438892316	Coin meter	Myntmätare	2 Coins, 10+20 NOK
1	1	438892320	Coin meter	Myntmätare	2 Coins, 1+5 HKD
1	1	438892322	Coin meter	Myntmätare	2 Coins, 0,2+1 AUD
1	1	438892404	Coin meter	Myntmätare	2 Coins, 1+1 AUD
1	1	438892323	Coin meter	Myntmätare	2 Coins, 0,1+0,5 EUR
1	1	438892325	Coin meter	Myntmätare	2 Coins, 0,2+1 EUR
1	1	438892326	Coin meter	Myntmätare	2 Coins, 1+2 EUR
1	1	438892327	Coin meter	Myntmätare	2 Coins, 0,2+2 EUR
1	1	438892329	Coin meter	Myntmätare	TOKEN 25,8x2,3
1	1	438892331	Coin meter	Myntmätare	1 Coin, 1 AED
1	1	438892332	Coin meter	Myntmätare	1 Coin, 1 AUD
1	1	438892335	Coin meter	Myntmätare	1 Coin, 2 DKK
1	1	438892336	Coin meter	Myntmätare	1 Coin, 10 DKK
1	1	438892337	Coin meter	Myntmätare	1 Coin, 0,1 EUR
1	1	438892338	Coin meter	Myntmätare	1 Coin, 0,2 EUR
1	1	438892339	Coin meter	Myntmätare	1 Coin, 0,5 EUR
1	1	438892340	Coin meter	Myntmätare	1 Coin, 1 EUR

info@zipnasklade.ru
8(800)500-69-51

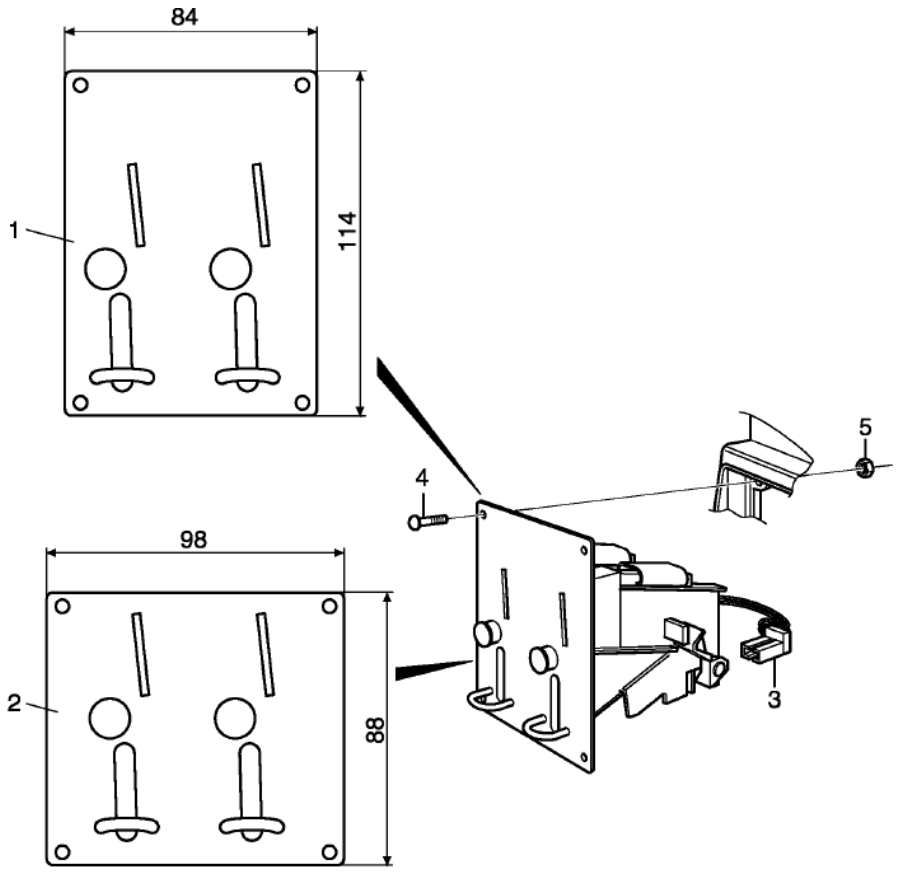

Issue	Month	Year
01	08	09

102672

Pos	Qty	Part.no	Description	Beskrivning	Notes
1	1	438892342	Coin meter	Myntmätare	1 Coin, 1 MACAUDOLLAR
1	1	438892343	Coin meter	Myntmätare	1 Coin, 5 HKD
1	1	438892345	Coin meter	Myntmätare	1 Coin, 500 WON
1	1	438892348	Coin meter	Myntmätare	1 Coin, 1 SEK
1	1	438892349	Coin meter	Myntmätare	1 Coin, 5 SEK
1	1	438892352	Coin meter	Myntmätare	1 Coin, 1 SGD
1	1	438892353	Coin meter	Myntmätare	1 Coin, 10 TWD
1	1	438892355	Coin meter	Myntmätare	1 Coin, 1 NOK
1	1	438892357	Coin meter	Myntmätare	1 Coin, 10 NOK
1	1	438892359	Coin meter	Myntmätare	TOKEN 25,7x1,6
1	1	438892360	Coin meter	Myntmätare	TOKEN 26,0x2,1
1	1	438892368	Coin meter	Myntmätare	TOKEN 26,3x1,9
1	1	438892376	Coin meter	Myntmätare	TOKEN 25,0x2,0
1	1	438892378	Coin meter	Myntmätare	TOKEN 23,5x1,7
1	1	438892379	Coin meter	Myntmätare	TOKEN 25,8x1,7
1	1	438892381	Coin meter	Myntmätare	TOKEN 27,4x1,6
1	1	438892382	Coin meter	Myntmätare	TOKEN 25,0x1,8
1	1	438892383	Coin meter	Myntmätare	TOKEN 24,3x1,5
1	1	438892385	Coin meter	Myntmätare	TOKEN 22,5x1,5
1	1	438892386	Coin meter	Myntmätare	TOKEN 27,0x1,6
1	1	438892387	Coin meter	Myntmätare	TOKEN 24,3x1,5
1	1	438892388	Coin meter	Myntmätare	TOKEN 23,7x1,6
1	1	438892389	Coin meter	Myntmätare	TOKEN 19,0x1,0
1	1	438892390	Coin meter	Myntmätare	TOKEN 19,0x1,5
1	1	438892391	Coin meter	Myntmätare	TOKEN 22,35x1,6
1	1	438892394	Coin meter	Myntmätare	TOKEN MIELE
1	1	438892395	Coin meter	Myntmätare	1 Coin, 5 DKK
1	1	438892396	Coin meter	Myntmätare	2 Coins, 1+2 AUD
1	1	438892405	Coin meter	Myntmätare	2 Coins, 2+2 AUD
1	1	438892397	Coin meter	Myntmätare	1 Coin, 2 EUR

info@zipnasklade.ru
8(800)500-69-51

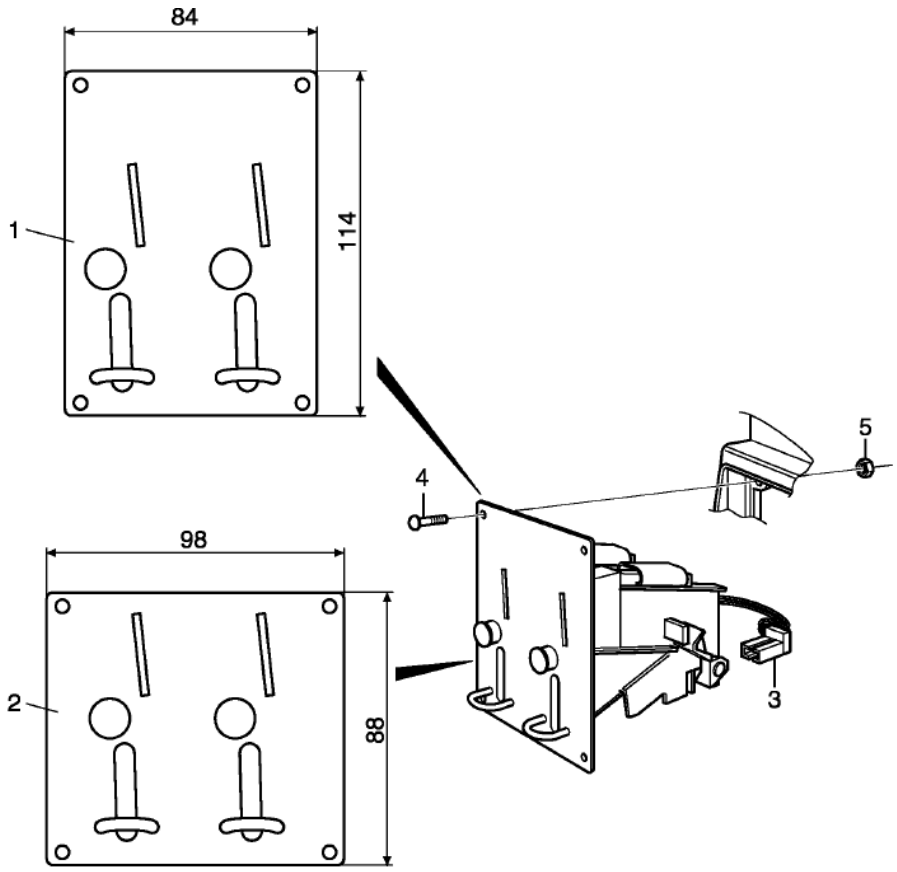

Issue	Month	Year
01	08	09

102672

W4130H Compass
Coin meter
Myntmätare

Illustration Illustration	Issue Utgåva	Month Månad	
102672/0	**7**	**11**	**2016**

Pos	Qty	Part.no	Description	Beskrivning	Notes
1	1	438892398	Coin meter	Myntmätare	TOKEN 32,0x2,0
1	1	438892401	Coin meter	Myntmätare	2 Coins, 1+5 LTL
1	1	438892403	Coin meter	Myntmätare	2 Coins, 1+2 CHF
2	1	438893159	Coin meter	Myntmätare	TOKEN 25,7x1,6
2	1	438893160	Coin meter	Myntmätare	TOKEN 26,0x2,1
2	1	438893175	Coin meter	Myntmätare	TOKEN 22,0x1,6
2	1	438893176	Coin meter	Myntmätare	TOKEN 25,0x2,0
2	1	438893178	Coin meter	Myntmätare	TOKEN 23,5x1,7
2	1	438893179	Coin meter	Myntmätare	TOKEN 25,8x1,7
2	1	438893181	Coin meter	Myntmätare	TOKEN 27,4x1,6
2	1	438893182	Coin meter	Myntmätare	TOKEN 25,0x1,8
2	1	438893185	Coin meter	Myntmätare	TOKEN 22,5x1,5
2	1	438893186	Coin meter	Myntmätare	TOKEN 27,0x1,6
2	1	438893187	Coin meter	Myntmätare	TOKEN 24,3x1,5
2	1	438893188	Coin meter	Myntmätare	TOKEN 23,7x1,6
2	1	438893189	Coin meter	Myntmätare	TOKEN 19,0x1,0
2	1	438893190	Coin meter	Myntmätare	TOKEN 19,0x1,5
2	1	438893191	Coin meter	Myntmätare	TOKEN 22,35x1,6
3	Rq	438892499	• *Sensor*	• *Sensor*	
4	4	471891090	Screw	Skruv	
5	4	731231201	Nut	Mutter	M4

info@zipnasklade.ru
8(800)500-69-51

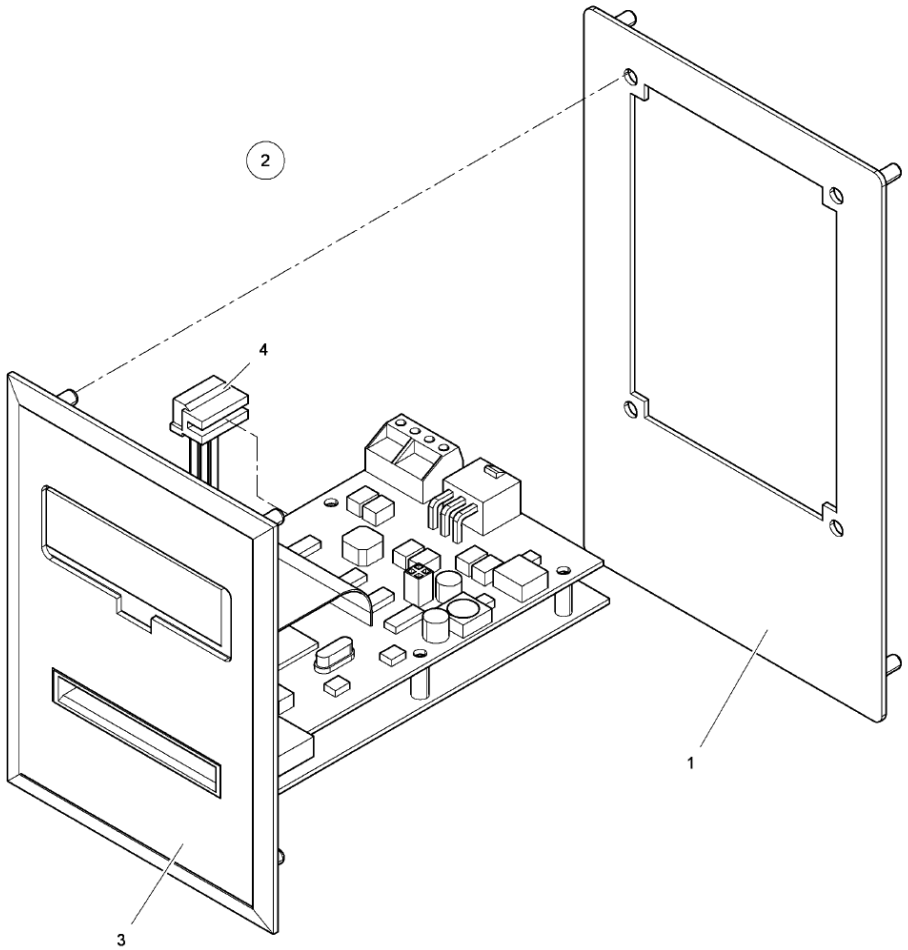

50 01 13

Issue Month Year
01 08 09

Pos	Qty	Part.no	Description	Beskrivning	Notes
1	1	432215013	Cover plate	Täckplåt	
3	1	488803817	• *Sign*	• *Skylt*	
4	1	413327451	Cable set	Ledningssats	

info@zipnasklade.ru
8(800)500-69-51

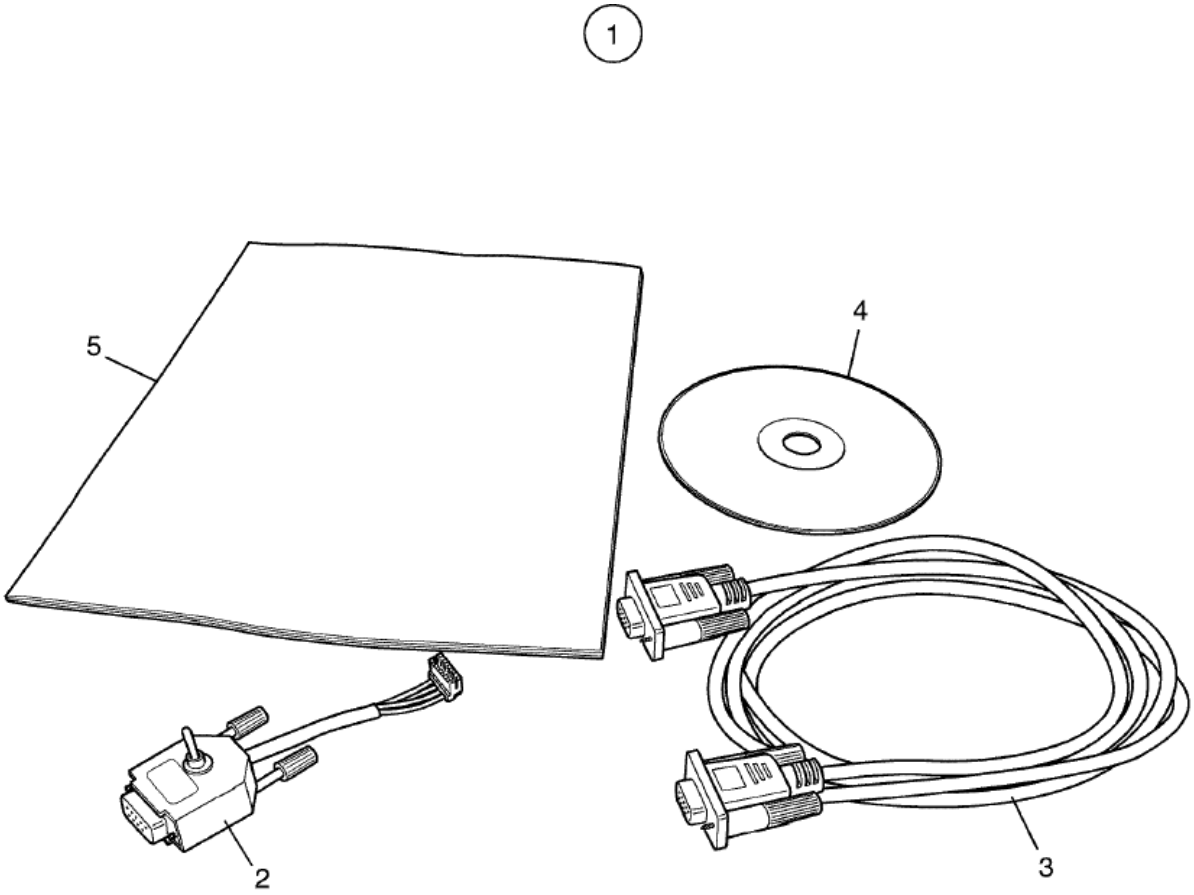

Issue	Month	Year
01	12	06

102486

W4130H Compass
Compass control loader
Compass control loader

Illustration	Issue	Month	
Illustration	Utgåva	Månad	
102486/1	**1**	**12**	**2006**

Pos	Qty	Part.no	Description	Beskrivning	Notes
1	1	*	Compass control loader	Compass control loader	Complete
2	1	413293401	• *Cable*	• *Kabel*	
3	1	438879301	• *Cable*	• *Kabel*	Complete
4	1	438921060	• *CD-ROM*	• *CD-ROM*	
5	1	438921290	• *User instructions*	• *Bruksanvisning*	Swedish
5	1	438921291	• *User instructions*	• *Bruksanvisning*	English

info@zipnasklade.ru
8(800)500-69-51

Part.no/Part.no	Page/Sida	Part.no/Part.no	Page/Sida	Part.no/Part.no	Page/Sida	Part.no/Part.no	Page/Sida
	17	413327601	73	432196201	19	432230601	43
	21	413327901	69	432200201	11	432235201	11
	21	413328001	31	432203203	11	432240451	61
	25	413370411	9	432203210	11	432240502	61
	43	413421201	19	432203310	11	432240602	61
	43	413506801	7	432203311	11	432240701	61
	43	413591502	37	432203331	11	432240901	61
	43	432064101	25	432203332	11	432241201	61
413220125	11	432122001	39	432203803	13	432241301	61
413260401	29	432122901	25	432203810	13	432250101	55
413261115	29	432129501	9	432205001	11	432250201	41
413261152	29	432130601	7	432205002	11	432250201	55
413290206	57	432130701	7	432206401	11	432250501	55
413290502	37	432130801	7	432206501	11	432250601	41
413291501	13	432131101	7	432208201	11	432250701	41
413291502	13	432131202	7	432208202	11	432250802	41
413291803	27	432141801	9	432212102	11	432251101	41
413291804	27	432141901	9	432213101	11	432251602	41
413291804	39	432143801	9	432213501	11	432251604	57
413291807	27	432145301	7	432214701	13	432251801	57
413293401	85	432145401	25	432215011	29	432252802	41
413294601	37	432145501	25	432215012	65	432253101	57
413296511	9	432145801	7	432215012	67	432253401	57
413296512	9	432147001	7	432215013	83	432253701	57
413296513	9	432147301	25	432215401	35	432254801	57
413296524	9	432150201	15	432216311	11	432262002	19
413308205	37	432150203	15	432216313	11	432262012	19
413308229	49	432150205	15	432216313	11	432264721	29
413308230	49	432152501	15	432217302	71	432264723	29
413308235	37	432154201	15	432217302	73	432264724	29
413308402	39	432154701	15	432217412	69	432264726	29
413308409	71	432155201	15	432217512	69	432264726	29
413308409	73	432156201	15	432217901	11	432264727	29
413308416	31	432156701	15	432218301	63	432264729	29
413308422	27	432157201	15	432218401	63	432264730	29
413308425	37	432157202	15	432218502	69	432264731	29
413308607	45	432157203	15	432219901	35	432290511	23
413308608	45	432160701	15	432219903	35	432290511	31
413308608	47	432160702	15	432219905	35	432295403	37
413308807	47	432160704	15	432220321	69	432295413	37
413308807	49	432160705	15	432220322	69	432296101	27
413308808	51	432160707	15	432221401	35	432297701	9
413308808	53	432163101	59	432221501	11	432298210	57
413318202	35	432164901	9	432223102	71	432298220	65
413318209	51	432165001	7	432223111	73	432298220	67
413318209	53	432165301	9	432223301	71	432298302	25
413318210	51	432165401	9	432223402	71	432298304	37
413318210	53	432167301	59	432223412	71	432298401	35
413318211	53	432182702	19	432223422	73	432298501	9
413318416	65	432184202	19	432223432	73	432298701	63
413327217	9	432184203	19	432224701	11	432299002	25
413327218	25	432184204	19	432225601	37	432305803	59
413327219	65	432185701	19	432225701	37	432309210	71
413327221	67	432185702	19	432225801	35	432309286	37
413327401	37	432187201	19	432225901	11	432309401	69
413327403	37	432188703	19	432226501	29	432309401	71
413327405	31	432188704	19	432226801	71	432309615	69
413327413	31	432188711	19	432226801	73	432309615	71
413327420	31	432188712	19	432227001	19	432310601	37
413327451	83	432195002	19	432227301	11	432318241	41
413327502	31	432195101	19	432227401	9	432319271	69
413327601	69	432195201	19	432230001	69	432360401	39
413327601	71	432195401	19	432230101	43	432360402	39

info@ipnaklade.ru
8(800)500 69 51

Part.no/Part.no	Page/Sida	Part.no/Part.no	Page/Sida	Part.no/Part.no	Page/Sida	Part.no/Part.no	Page/Sida
432631801	13	438879301	85	438892398	81	471244242	41
432632001	37	438879702	37	438892401	81	471246418	41
432632301	37	438892001	75	438892403	81	471293701	59
432632401	31	438892002	75	438892404	77	471467393	39
432632501	31	438892011	75	438892405	79	471467395	31
432632601	31	438892190	69	438892407	77	471467397	31
432632701	31	438892301	77	438892499	81	471483501	41
432634002	31	438892303	77	438893001	75	471756521	11
432634101	31	438892304	77	438893002	75	471771112	25
432634201	31	438892306	77	438893003	75	471778810	29
432634301	31	438892307	77	438893004	75	471780702	7
432634402	31	438892309	77	438893005	75	471781801	55
432634501	31	438892310	77	438893006	75	471782610	11
432680506	37	438892311	77	438893007	75	471784301	7
432690204	31	438892312	77	438893008	75	471784801	31
432690206	31	438892313	77	438893009	75	471785912	35
432690302	37	438892314	77	438893010	75	471785916	35
432693302	37	438892315	77	438893011	75	471787104	43
432713063	37	438892316	77	438893012	75	471787104	55
432870101	31	438892320	77	438893159	81	471787107	41
432870203	31	438892322	77	438893160	81	471787107	57
438005101	55	438892323	77	438893175	81	471788701	41
438005201	55	438892325	77	438893176	81	471795802	69
438005301	55	438892326	77	438893178	81	471796002	37
438005401	55	438892327	77	438893179	81	471796002	69
438005501	55	438892329	77	438893181	81	471796002	71
438005603	43	438892331	77	438893182	81	471796002	73
438005604	43	438892332	77	438893185	81	471797703	37
438014401	19	438892335	77	438893186	81	471797704	39
438244002	33	438892336	77	438893187	81	471797704	43
438406201	19	438892337	77	438893188	81	471798001	13
438406301	19	438892338	77	438893189	81	471812402	41
438517601	9	438892339	77	438893190	81	471812627	59
438795001	37	438892340	77	438893191	81	471812860	41
438795002	37	438892342	79	438921060	85	471813901	41
438810206	41	438892343	79	438921290	85	471813911	41
438812002	41	438892345	79	438921291	85	471814709	15
438815503	15	438892348	79	438956101	23	471814751	15
438815601	7	438892349	79	438956201	9	471817501	43
438815802	25	438892352	79	438956901	9	471818010	9
438816301	31	438892353	79	438957201	9	471819501	55
438816501	31	438892355	79	438963622	35	471819901	43
438870101	37	438892357	79	438963623	35	471821070	51
438870101	73	438892359	79	438963624	35	471821070	53
438870102	73	438892360	79	438965901	31	471821071	51
438870103	37	438892368	79	438967801	35	471821071	53
438870103	73	438892376	79	438967802	35	471821078	51
438870104	73	438892378	79	438967803	35	471821078	53
438872001	35	438892379	79	438967804	35	471821079	51
438872002	35	438892381	79	438967811	35	471821079	53
438872003	35	438892382	79	438967812	35	471821501	57
438877402	27	438892383	79	438967813	35	471821503	57
438877501	69	438892385	79	438967814	35	471823452	49
438877501	71	438892386	79	438970321	25	471823464	49
438877501	73	438892387	79	438979901	27	471823676	45
438877502	69	438892388	79	438979902	25	471823676	47
438877507	69	438892389	79	438979903	25	471823678	45
438877507	71	438892390	79	438979912	27	471823678	47
438877801	69	438892391	79	471226569	13	471824063	49
438877802	69	438892394	79	471226569	33	471824063	51
438877812	69	438892395	79	471226569	41	471824063	53
438879001	69	438892396	79	471243610	13	471824064	47
438879003	71	438892397	79	471244241	33	471824068	47

info@ipnaklade.u
8(800)500-69-5

Part.no/Part.no	Page/Sida	Part.no/Part.no	Page/Sida	Part.no/Part.no	Page/Sida	Part.no/Part.no	Page/Sida
471824069	49	471962871	65	741510925	43		
471824069	51	471962871	67	744311306	59		
471824069	53	471962875	65	762118210	37		
471824307	41	471962875	67	877521108	43		
471824308	41	471962885	67	988802252	85		
471824309	41	471967894	39				
471824310	41	471982299	9				
471827903	59	471982701	7				
471827908	59	471982702	7				
471832203	25	471982703	9				
471832301	15	471982704	9				
471832802	15	471982901	9				
471832805	7	471982902	9				
471832805	9	471982904	9				
471832808	7	472579201	29				
471834213	25	472579202	29				
471834215	13	472579210	29				
471834223	25	472579301	29				
471834247	23	472976801	15				
471834436	19	472990099	11				
471834602	31	472990497	31				
471834609	31	472990498	9				
471835605	25	472991305	7				
471837601	73	472991309	7				
471837699	73	472991311	7				
471840402	19	472991317	15				
471840403	55	472991930	71				
471841301	7	472991931	71				
471841401	7	472991932	71				
471845802	19	472991933	71				
471850200	25	472992001	19				
471850214	15	472992002	19				
471850234	7	472992919	27				
471850234	7	472992941	27				
471852701	21	472993802	27				
471852801	19	472995401	61				
471855503	7	472995403	61				
471862401	59	487170245	35				
471864102	11	488803817	83				
471864402	43	725236661	19				
471868813	43	725246151	7				
471868813	55	725246451	7				
471869321	43	725246571	7				
471869501	59	731231201	81				
471869701	59	732211801	7				
471875011	37	732211801	7				
471875016	39	732211801	17				
471876701	35	732211801	25				
471876702	35	732212201	25				
471876802	27	735313900	15				
471878301	35	735950101	15				
471878303	35	736281651	43				
471878304	35	736282551	41				
471882601	25	736283151	41				
471882701	25	736283751	41				
471886101	33	736284051	41				
471886102	13	736284051	41				
471886301	33	736284051	41				
471891090	81	736284651	43				
471922259	15	736284651	57				
471960801	63	738220718	15				
471962832	65	738220915	15				
471962870	65	740420600	43				

info@ipnasklade.ru
8(800)500-69-51

info@zipnasklade.ru
8(800)500-69-51

info@zipnasklade.ru
8(800)500-69-51

ELECTROLUX LAUNDRY SYSTEMS SWEDEN AB
341 80 Ljungby, Sweden. Telephone +46 372 661 00. Telefax +46 372 133 90
Internet: www.electrolux-wascator.com E-mail: els.info@electrolux.se