Spareparts Catalogue
Reservdelskatalog

W4105H Compass

info@zipnasklade.ru
8(800)500-69-51

Electrolux

Dok.no 438919025
Version 26.2017

info@zipnasklade.ru
8(800)500-69-51

W4105H Compass

Illustration	Page	Table of content
102495	6	Base and outer drum
102298	10	Lining and top panel
102301	14	Drum, rear gable
102302	16	Door and hinged joint
102500	18	Door lock
102490	20	Motor
102491	22	Motor control
102378	24	Control panel
102679	26	Programmer
102380	30	Electric components connection
102485	36	Drain valve and hoses
102316	40	Water connections
102481	42	Inlet valves and cable set
102482	44	Inlet valves and cable set
102483	46	Inlet valves and cable set
102384	48	Inlet valves and cable set
102343	50	Drain valve
102492	52	Drain valve, electrical
102493	54	Drain pump
102501	56	Steam components
102344	58	Detergent container
102596	60	Emergency stop
102663	62	Key switch
500115	64	Coin box
500109	66	Coin box
500110	68	Coinbox USA
500114	70	Electronic coin meter
102672	72	Coin meter
500113	78	Single system
102486	80	Compass control loader

info@zipnasklade.ru
8(800)500-69-51

info@zipnasklade.ru
8(800)500-69-51

W4105H Compass

Table of content	Innehållsförteckning	Page/Sida
Base and outer drum	Stativ och yttertrumma	6
Lining and top panel	Klädselplåtar och topplock	10
Drum, rear gable	Trumma,bakgavel	14
Door and hinged joint	Lucka och gångled	16
Door lock	Lucklås	18
Motor	Motor	20
Motor control	Motorstyrning	22
Control panel	Manöverpanel	24
Programmer	Programverk	26
Electric components connection	Eldetaljer anslutning	30
Drain valve and hoses	Avloppsventil och slangar	36
Water connections	Vattenanslutningar	40
Inlet valves and cable set	Inloppsventiler och ledningssatser	42
Inlet valves and cable set	Inloppsventiler och ledningssatser	44
Inlet valves and cable set	Inloppsventiler och ledningssatser	46
Inlet valves and cable set	Inloppsventiler och ledningssatser	48
Drain valve	Avloppsventil	50
Drain valve, electrical	Avloppsventil, elektrisk	52
Drain pump	Avloppspump	54
Steam components	Ångdetaljer	56
Detergent container	Tvättmedelsbehållare	58
Emergency stop	Nödstopp	60
Key switch	Nyckelbrytare	62
Coin box	Myntlåda	64
Coin box	Myntlåda	66
Coinbox USA	Myntlåda USA	68
Electronic coin meter	Elektronisk myntmätare	70
Coin meter	Myntmätare	72
Single system	Single system	78
Compass control loader	Compass control loader	80

info@zipnasklade.ru
8(800)500-69-51

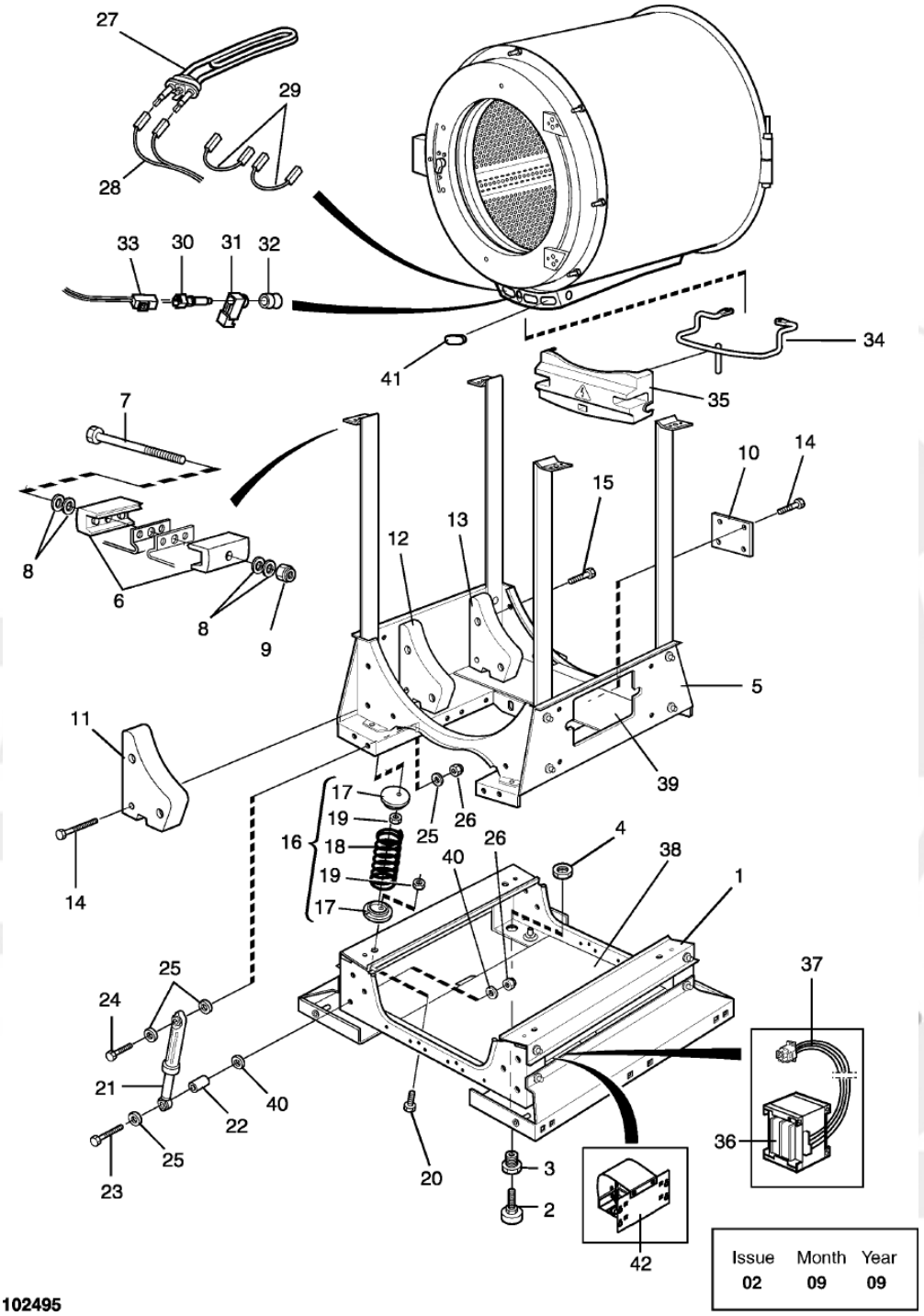
27
29
28
33
30
31
32
41
34
35
7
10
14
15
13
12
8
6
8
9
5
11
39
17
19
16
18
19
17
25
26
26
40
4
38
1
14
25
24
21
22
40
25
23
20
3
2
37
36
42
Issue 02
Month 09
Year 09
102495

W4105H Compass
Base and outer drum
Stativ och yttertrumma

Illustration Illustration	Issue Utgåva	Month Månad	
102495/1	**7**	**3**	**2013**

Pos	Qty	Part.no	Description	Beskrivning	Notes
1	1	432126101	Frame	Stativ	Lower
2	4	438816001	• *Foot*	• *Fot*	M10
3	4	432145801	• *Bushing*	• *Bussning*	M10
4	4	471841301	• *Nut*	• *Mutter*	M20
5	1	432126202	Frame	Stativ	Upper
6	4	432145301	• *Tensioner*	• *Spänne*	
7	2	725246571	• *Screw*	• *Skruv*	M8X70
8	8	471780702	• *Tension plate*	• *Spännbricka*	18x8,4x2
9	2	732211801	• *Locking nut*	• *Låsmutter*	M8
10	1	432145901	• *Bracket*	• *Vridskydd*	
11	2	432125601	• *Counterweight*	• *Motvikt*	
12	2	432126401	• *Counterweight*	• *Motvikt*	
13	2	432126501	• *Counterweight*	• *Motvikt*	
14	6	471832807	• *Screw*	• *Skruv*	M8X65
15	10	471832805	• *Screw*	• *Skruv*	M8X20
16	1	472991304	Suspension	Fjäderenhet	Kit
17	8	*	• *Spring retainer*	• *Fjäderfäste*	
18	4	*	• *Spring*	• *Fjäder*	
19	8	*	• *Nut*	• *Mutter*	
20	8	471832806	Screw	Skruv	
21	1	472991308	Shock absorber	Stötdämpare	Kit, 4 pcs
22	4	471855503	Bushing	Bussning	
23	4	725246451	Screw	Skruv	M8X65
24	4	725246151	Screw	Skruv	M8X50
25	12	471850234	Washer	Bricka	8,4x24x2
26	8	732211801	Locking nut	Låsmutter	M8
27	3	471982111	Heating element	Element	3,33kW 240V
27	3	471982112	Heating element	Element	2,5kW 240V
27	3	471982113	Heating element	Element	3,33kW 254V
27	3	471982115	Heating element	Element	3.3kW 277V

info@zipnasklade.ru
8(800)500-69-51

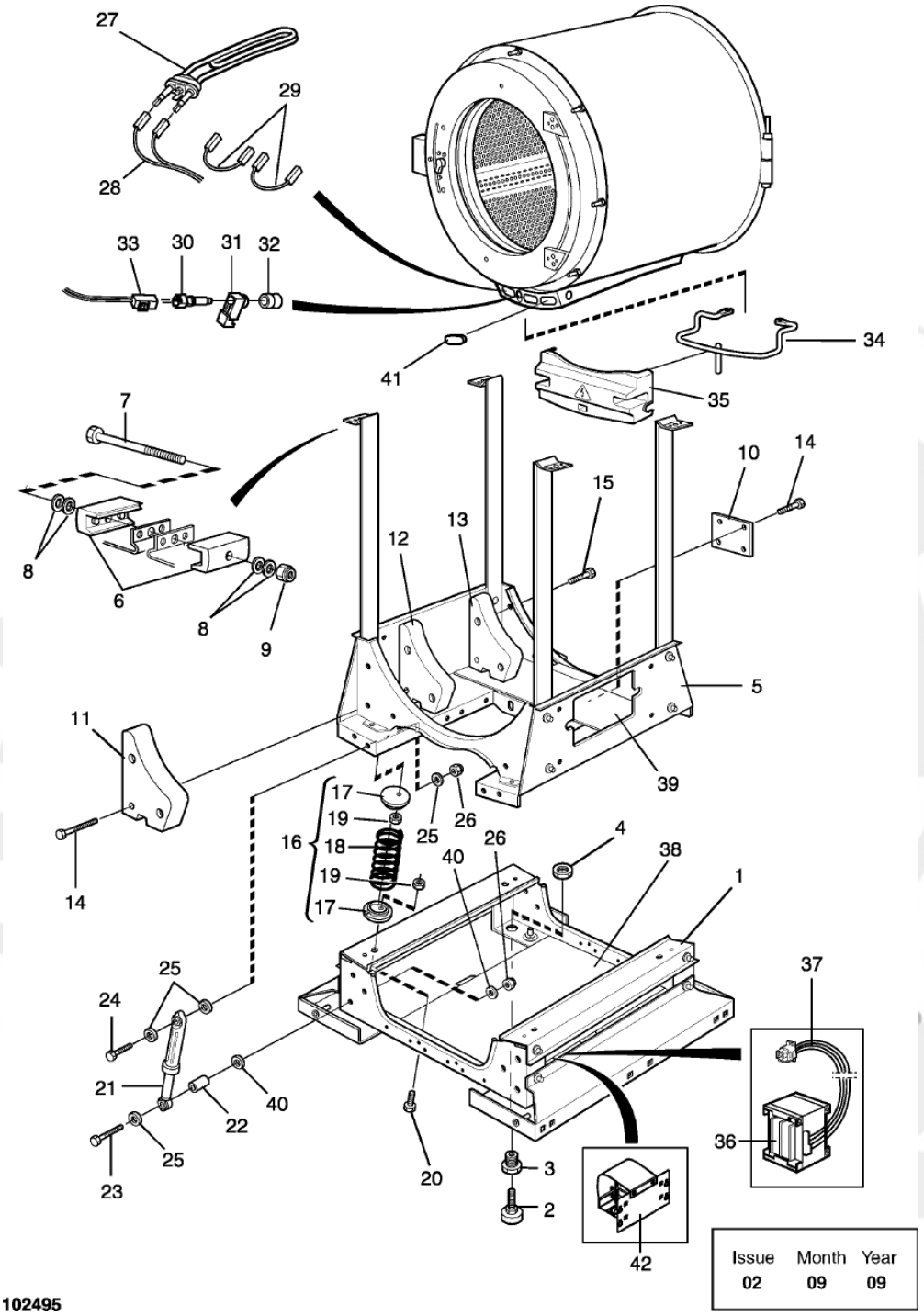
27
29
28
33
30
31
32
41
34
35
7
10
14
15
13
12
8
6
8
9
5
11
39
17
19
16
18
19
17
25
26
26
40
4
38
1
14
25
24
21
22
40
25
23
20
3
2
37
36
42
Issue 02
Month 09
Year 09
102495

Pos	Qty	Part.no	Description	Beskrivning	Notes
27	3	471982114	Heating element	Element	1kW 240V
27	3	471982811	Heating element	Element	1.6kW 230V Mop -595/107008
27	3	471983511	Heating element	Element	Mop 3.33kW 240V 595/107009-
27	3	471983213	Heating element	Element	Mop 3.33kW 254V 595/107009-
27	3	471983215	Heating element	Element	Mop 3.33kW 277V 595/107009-
28	1	432295002	Cable set	Ledningssats	
29	1	432295310	Cable set	Ledningssats	Kit
30	1	472990498	Sensor	Givare	Complete
31	1	*	• *Discharge*	• *Avlastning*	
32	1	*	• *Bushing*	• *Bussning*	
33	1	413327209	Cable set	Ledningssats	
34	1	432165301	Clamp	Bygel	
35	1	432165401	Cover	Skydd	
36	1	438956501	Transformer	Transformator	100-120V
36	1	438956901	Transformer	Transformator	200V
36	1	438956601	Transformer	Transformator	400-480V
37	1	432298501	Cable set	Ledningssats	200V
37	1	432299801	Cable set	Ledningssats	
38	1	438750902	Insulation	Isolering	
39	1	438751001	Insulation	Isolering	
40	8	471850234	Washer	Bricka	8,4x24x2
41	3	471982199	Plug	Propp	
42	1	413370410	Choke	Choke	7,5A

info@zipnasklade.ru
8(800)500-69-51

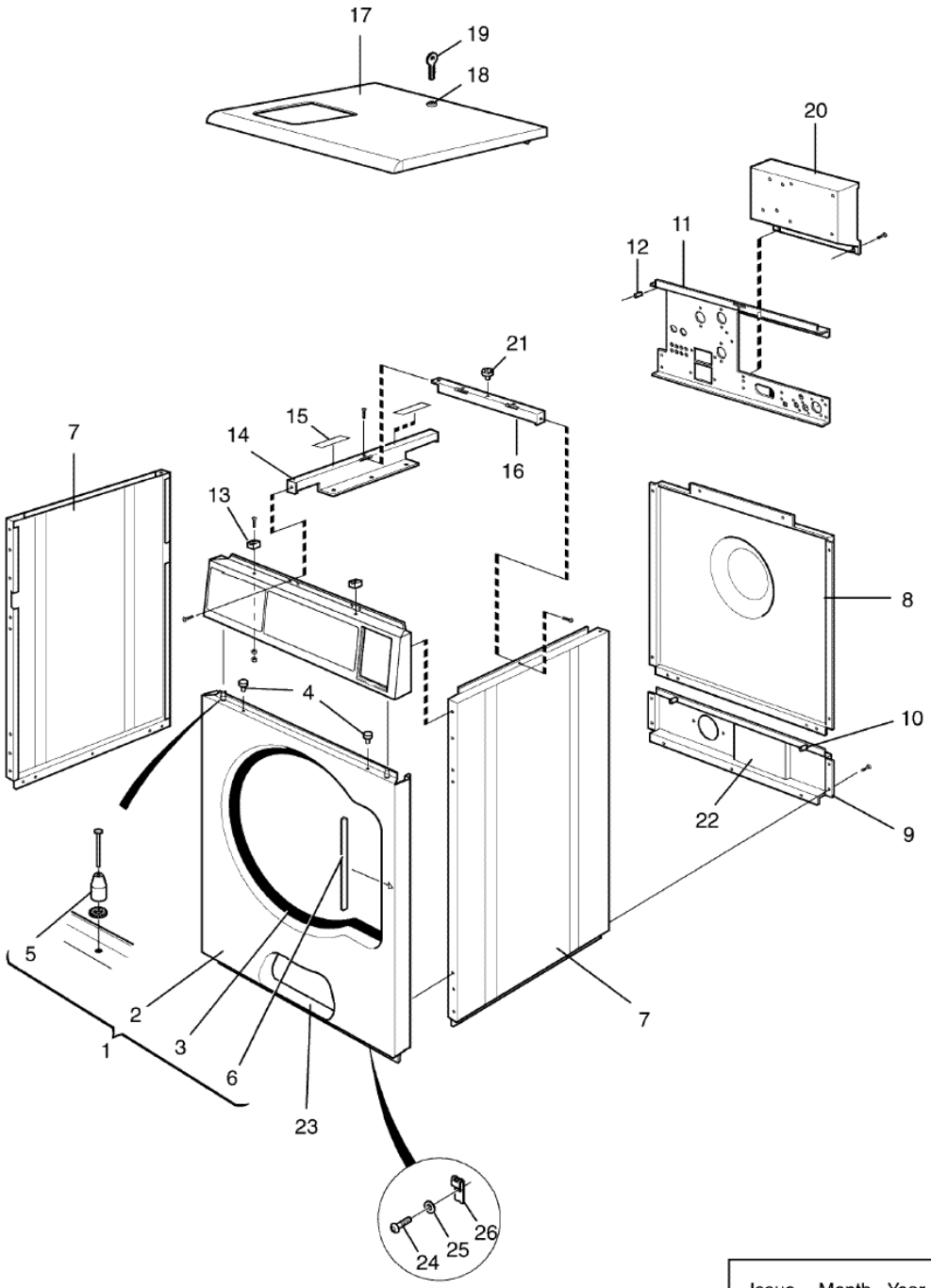

Issue	Month	Year
01	12	06

102298

W4105H Compass
Lining and top panel
Klädselplåtar och topplock

Illustration Illustration	Issue Utgåva	Month Månad	
102298/1	**7**	**4**	**2013**

Pos	Qty	Part.no	Description	Beskrivning	Notes
1	1	432220011	Front plate	Frontplåt	Complete Green
1	1	432220018	Front panel	Frontplåt	Complete Blue
1	1	413220021	Front panel	Frontplåt	Complete Wave Stainless
1	1	432220020	Front plate	Frontplåt	Complete Stainless
1	1	432220013	Front plate	Frontplåt	Complete White
2	1		• *Front panel*	• *Frontplåt*	
3	1	432216412	• *Strip*	• *List*	
4	2	471819601	• *Plug*	• *Plugg*	
5	2	438510902	• *Guide pin*	• *Styrpinne*	
6	1	471467267	• *Protection*	• *Skydd*	
7	2	432205803	Side panel	Sidoplåt	Grey
7	2	432205810	Side panel	Sidoplåt	Stainless
8	1	432206201	Rear panel	Bakstycke	Upper -595/107230
8	1	413500801	Rear panel	Bakstycke	595/107231-
9	1	432206301	Rear panel	Bakstycke	Lower -595/107230
10	6	471845802	Nut	Mutter	M6
11	1	432224603	Brace bracket	Stagplåt	
12	2	432218001	Spacer	Distans	
13	2	432227301	Guide	Styrning	
14	1	432213003	Brace	Stag	
15	2	471756521	Velcro tape	Kardborreband	
16	1	432212201	Brace	Stag	
17	1	432228165	Top panel	Topplock	
17	1	432228166	Top panel	Topplock	No detergent container
17	1	413220123	Top panel	Topplock	Coin-meter With lock
17	1	413220124	Top panel	Topplock	With lock No detergent container
18	1	471782610	• *Lock*	• *Lås*	
19	1	472990099	• *Key*	• *Nyckel*	SET
20	1	432225901	Plate	Plåt	-595/102314
20	1	432221501	Plate	Plåt	595/102315-

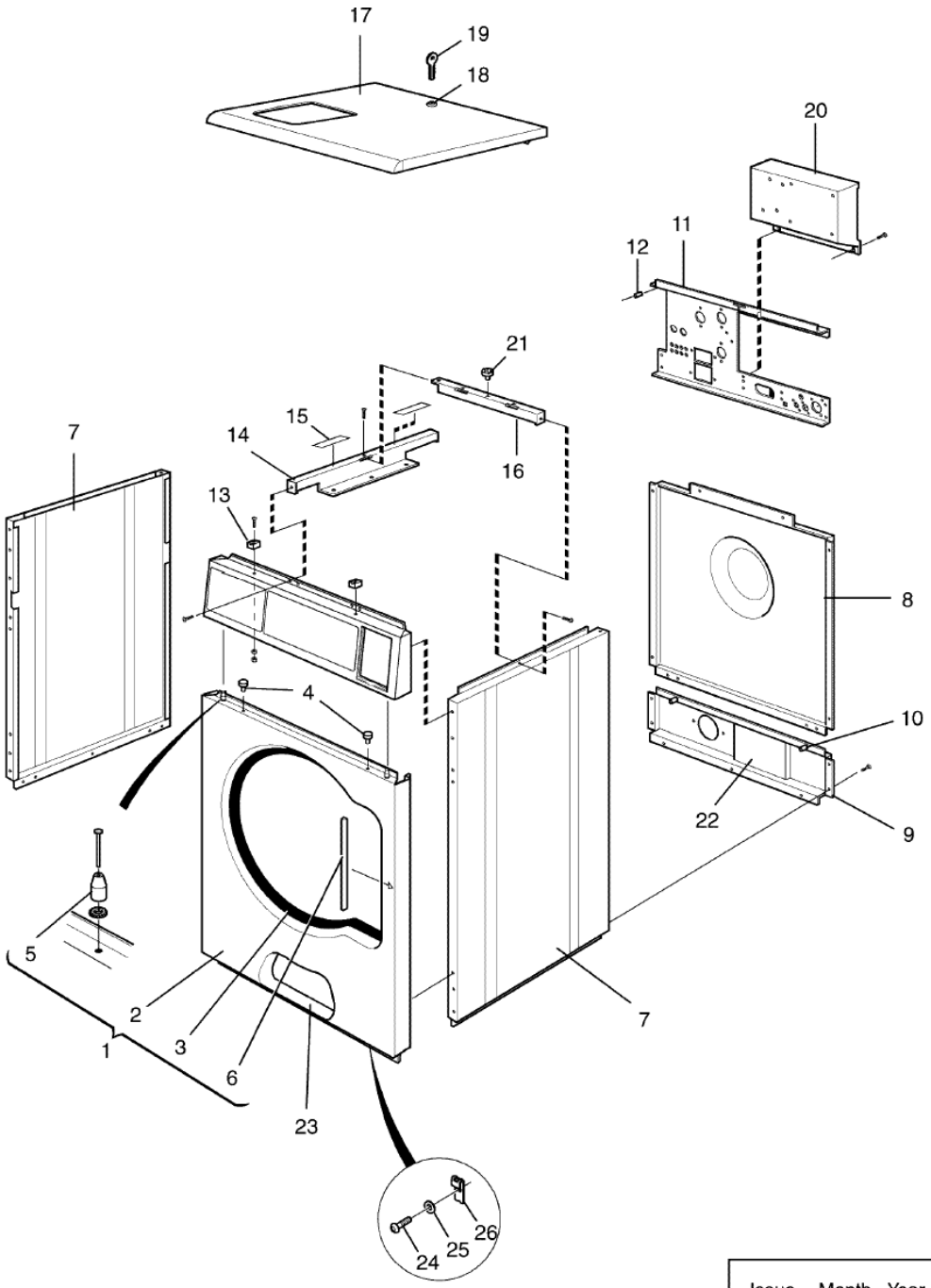

Issue	Month	Year
01	12	06

102298

W4105H Compass
Lining and top panel
Klädselplåtar och topplock

Illustration	Issue	Month	
Illustration	Utgåva	Månad	
102298/1	**7**	**4**	**2013**

Pos	Qty	Part.no	Description	Beskrivning	Notes
21	1	471864102	Plug	Propp	
22	1	438750801	Insulation	Isolering	
23	1	438750701	Insulation	Isolering	
24	2	471834435	Screw	Skruv	M6X16
25	2	735215301	Lock washer	Låsbricka	6,4
26	2	471786401	Clip	Clips	M6
27	1	432631801	Bracket	Hållare	
28	1	471886104	Level control	Nivåkontroll	
29	1	413291501	Cable set	Ledningssats	
30	1	471243610	Hose	Slang	
31	1	471226569	T-pipe	T-rör	

info@zipnasklade.ru
8(800)500-69-51

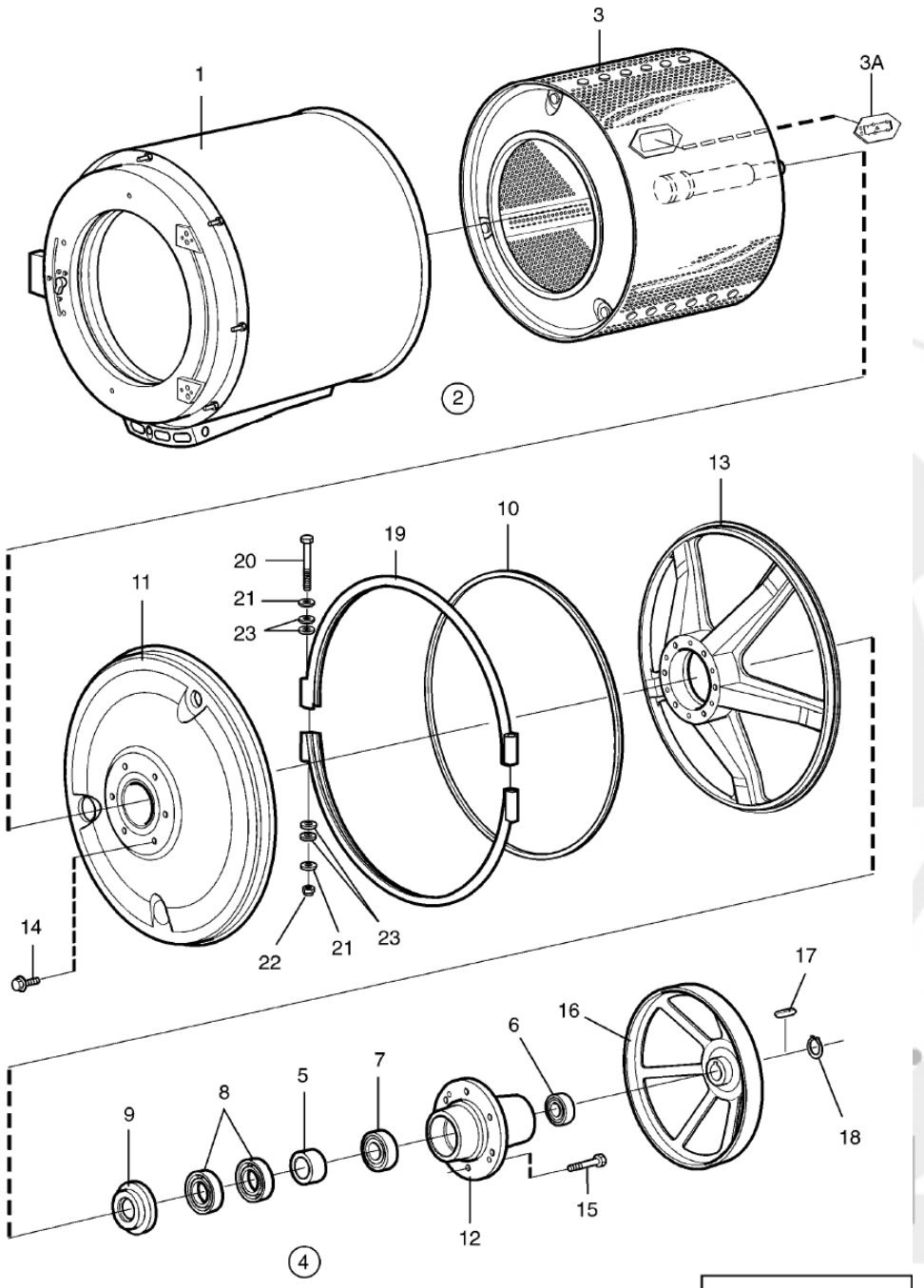

Issue	Month	Year
02	04	08

102301

W4105H Compass
Drum, rear gable
Trumma,bakgavel

Illustration	Issue	Month	
Illustration	Utgåva	Månad	
102301/1	**7**	**7**	**2013**

Pos	Qty	Part.no	Description	Beskrivning	Notes
1	1	432157101	Outer drum	Yttertrumma	Non-heated
1	1	432157102	Outer drum	Yttertrumma	El/Dual heating
1	1	432157103	Outer drum	Yttertrumma	Steam
2	1	432160601	Rear gable	Bakgavel	Complete
2	1	432160602	Rear gable	Bakgavel	Gas Complete
2	1	432160606	Rear gable	Bakgavel	MOP Complete
3	1	432150101	• *Inner drum*	• *Innertrumma*	
3	1	432150105	• *Inner drum*	• *Innertrumma*	MOP
3	1	472976801	•• *Door*	•• *Lucka*	
4	1	472991313	• *Repair kit*	• *Renoveringssats*	
5	1	*	•• *Bushing*	•• *Bussning*	
6	1	*	•• *Ball bearing*	•• *Kullager*	
7	1	*	•• *Ball bearing*	•• *Kullager*	
8	2	*	•• *Sealing ring*	•• *Tätningsring*	
9	1	*	•• *Sealing ring*	•• *Tätningsring*	
10	1	438815502	•• *Seal*	•• *Tätning*	
11	1	432154601	• *Lining*	• *Klädselplåt*	
11	1	432165601	• *Lining*	• *Klädselplåt*	Gas
12	1	432156101	• *Bearing housing*	• *Lagerhus*	
13	1	432154101	• *End piece*	• *Gavel*	
14	8	471832301	• *Screw*	• *Skruv*	M6X12
15	8	471832802	• *Screw*	• *Skruv*	M12X50
16	1	432155101	• *Pulley*	• *Remskiva*	
17	1	735950101	• *Wedge*	• *Plattkil*	14x9x50
18	1	735313900	• *C-clamp*	• *Spårring*	SGA 45
19	2	432156601	Tension strap	Spännband	
20	2	471922259	Screw	Skruv	M8X140
21	4	471850214	Washer	Bricka	8,4X20
22	2	732211801	Locking nut	Låsmutter	M8
23					Not used

info@zipnasklade.ru
8(800)500-69-51

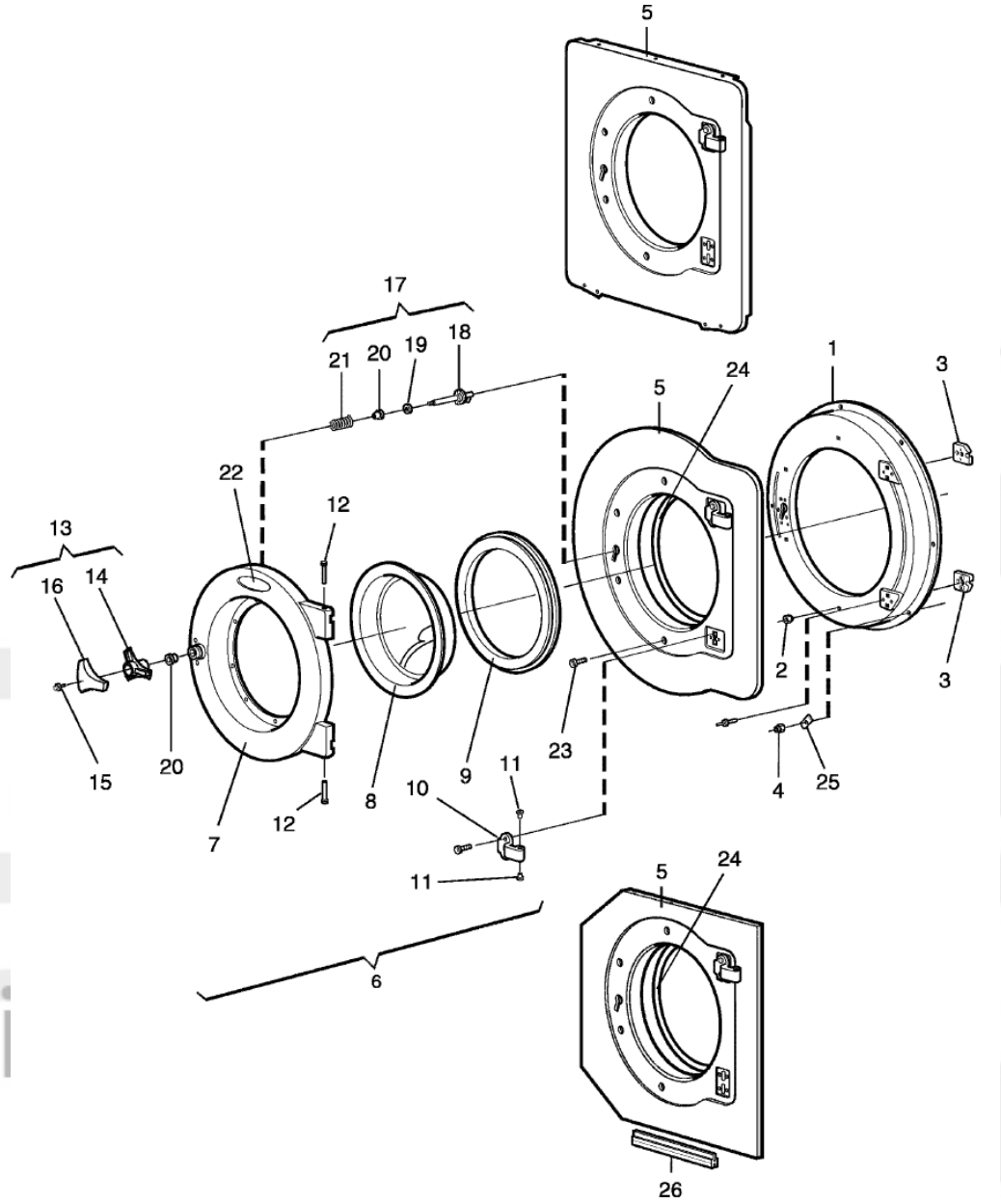

Issue	Month	Year
02	04	09

102302

W4105H Compass
Door and hinged joint
Lucka och gångled

Illustration Illustration	Issue Utgåva	Month Månad	
102302/1	**10**	**11**	**2015**

Pos	Qty	Part.no	Description	Beskrivning	Notes
1	1	432187101	Support frame	Fästplatta	
2	4	471845802	Nut	Mutter	M6
3	2	432195101	• *Bracket*	• *Fäste*	
4	9	471840402	Locking nut	Låsmutter	M6
5	1	432188602	Trim panel	Dekorplåt	
5	1	432188611	Trim panel	Dekorplåt	Stainless
6	1	413411201	Door	Lucka	Complete
7	1	*	• *Door*	• *Lucka*	
8	1	432185601	• *Door glass*	• *Luckglas*	
9	1	432184102	• *Door gasket*	• *Luckpackning*	Black
9	1	432184104	• *Door gasket*	• *Luckpackning*	Silicon Grey
10	2	432195002	• *Hinged joint*	• *Gångled*	
11	4	438406201	• *Bushing*	• *Bussning*	
12	2	432196101	• *Pin*	• *Tapp*	
13	1	472992002	• *Knob*	• *Vred*	Complete
14	1	*	•• *Knob*	•• *Vred*	Complete
15	1	725236661	•• *Screw*	•• *Skruv*	M6SF 6X12
16	1	432227001	•• *Knob*	•• *Vred*	
17	1	472992001	• *Lock shaft*	• *Låsaxel*	Complete
18	1	*	•• *Lock shaft*	•• *Låsaxel*	
19	1	*	•• *Washer*	•• *Bricka*	
20	2	*	•• *Bushing*	•• *Bussning*	
21	1	*	•• *Torsion spring*	•• *Vridfjäder*	
22	1	432262012	Sign	Skylt	Electrolux
22	1	432262002	Sign	Skylt	Wascomat
23	4	471834436	Screw	Skruv	
24					Not used
26					Not used

info@zipnasklade.ru
8(800)500-69-51

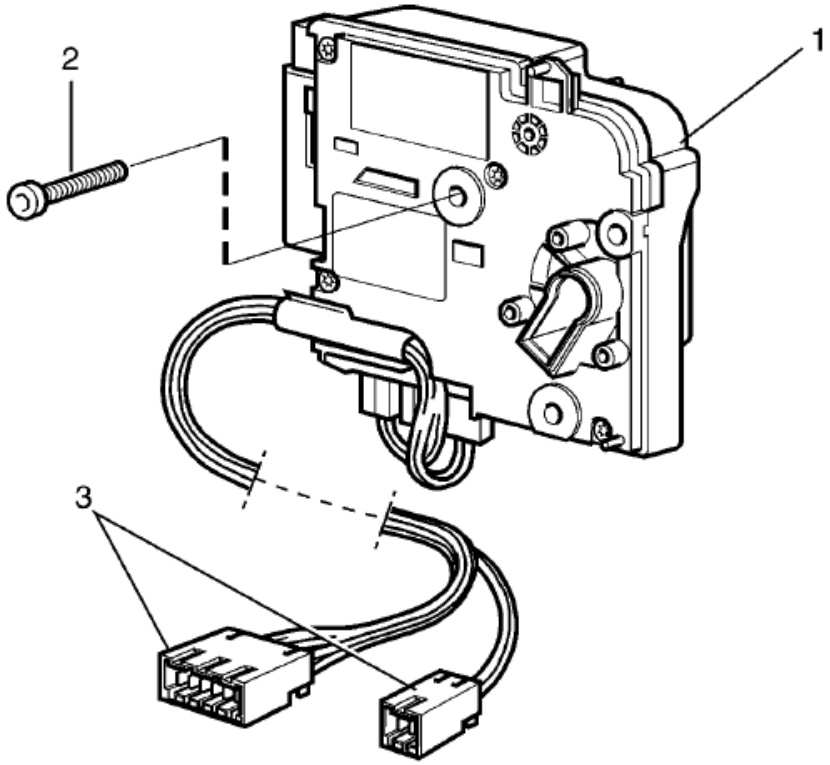

Issue	Month	Year
01	01	07

102500

W4105H Compass
Door lock
Lucklås

Illustration	Issue	Month	
Illustration	Utgåva	Månad	
102500/1	**1**	**1**	**2007**

Pos	Qty	Part.no	Description	Beskrivning	Notes
1	1	438956101	Door locking device	Lucklås	Complete
2	3	471834247	Screw	Skruv	M6X25
3	1	432290509	Cable set	Ledningssats	

info@zipnasklade.ru
8(800)500-69-51

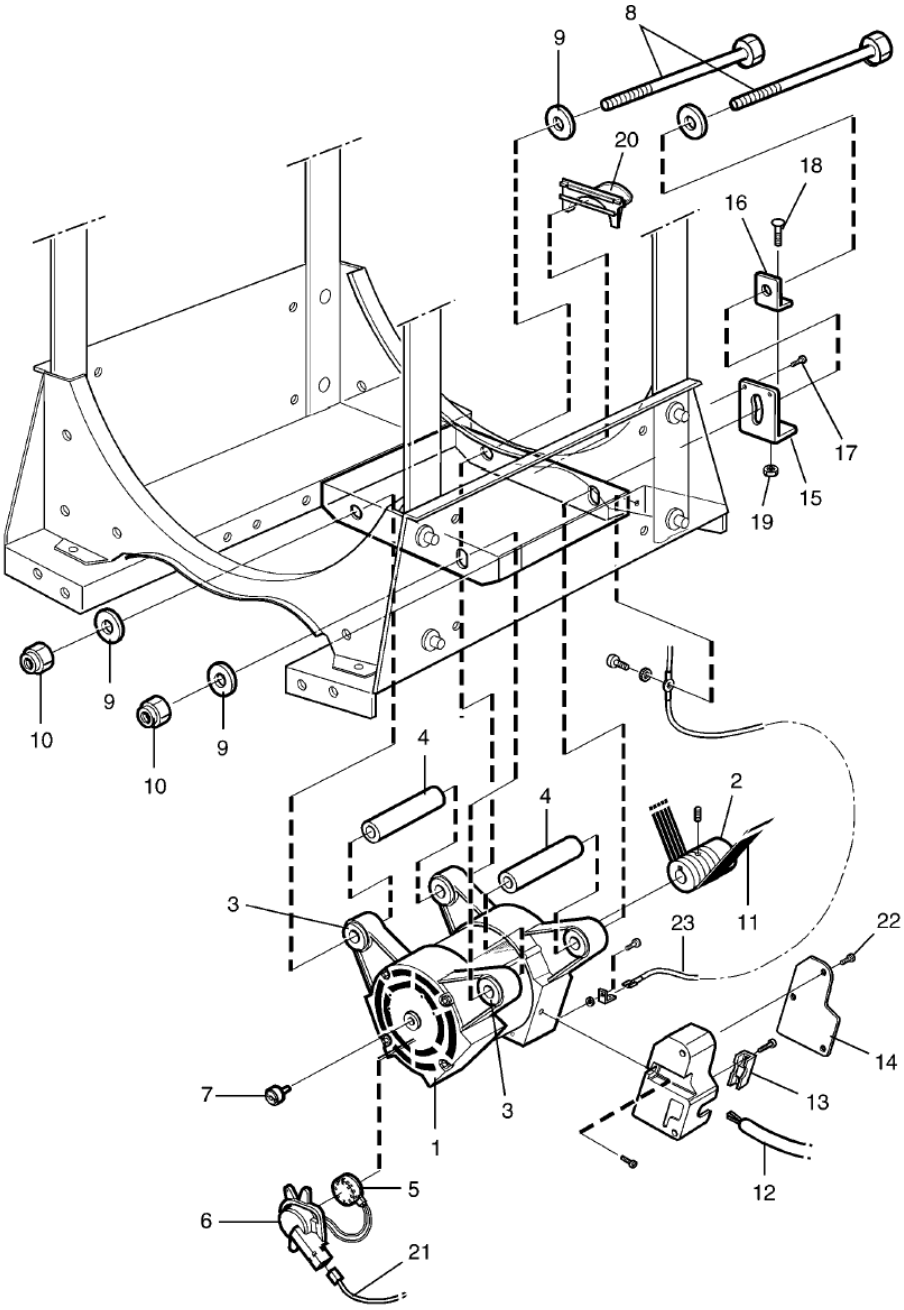

Issue	Month	Year
01	01	07

102490

W4105H Compass
Motor
Motor

Illustration	Issue	Month	
Illustration	Utgåva	Månad	
102490/1	**4**	**12**	**2008**

Pos	Qty	Part.no	Description	Beskrivning	Notes
1	1	438970231	Motor	Motor	
2	1	*	• *Pulley*	• *Remskiva*	
3	4	438815801	• *Rubber bushing*	• *Gummibussning*	
4	2	432064101	• *Pipe*	• *Rör*	
5	1	471882601	• *Tacho sensor*	• *Tachogivare*	
6	1	432122901	• *Cover*	• *Kåpa*	
7	1	471882701	• *Magnet*	• *Magnet*	
8	2	471835605	Screw	Skruv	M12x240
9	4	471850210	Washer	Bricka	12x35
10	2	732212201	Locking nut	Låsmutter	M12
11	1	471771107	Ribbed belt	Poly-V-rem	
12	1	432299001	Cable set	Ledningssats	
13	1	438979902	Clamp	Klämma	
14	1	438979903	Cover	Lock	
15	1	432145401	Belt tensioner	Remspännare	
16	1	432145501	Washer	Bricka	
17	2	471834223	Screw	Skruv	MRT-TT 5X10
18	1	471832203	Screw	Skruv	M8X50
19	1	732211801	Locking nut	Låsmutter	M8
20	1	432147301	Drip guard	Droppskydd	
21	1	413327210	Cable set	Ledningssats	
22	3	471834213	Screw	Skruv	MRT-TT 4X10
23	1	432298301	Cable set	Ledningssats	Main switch

info@zipnasklade.ru
8(800)500-69-51

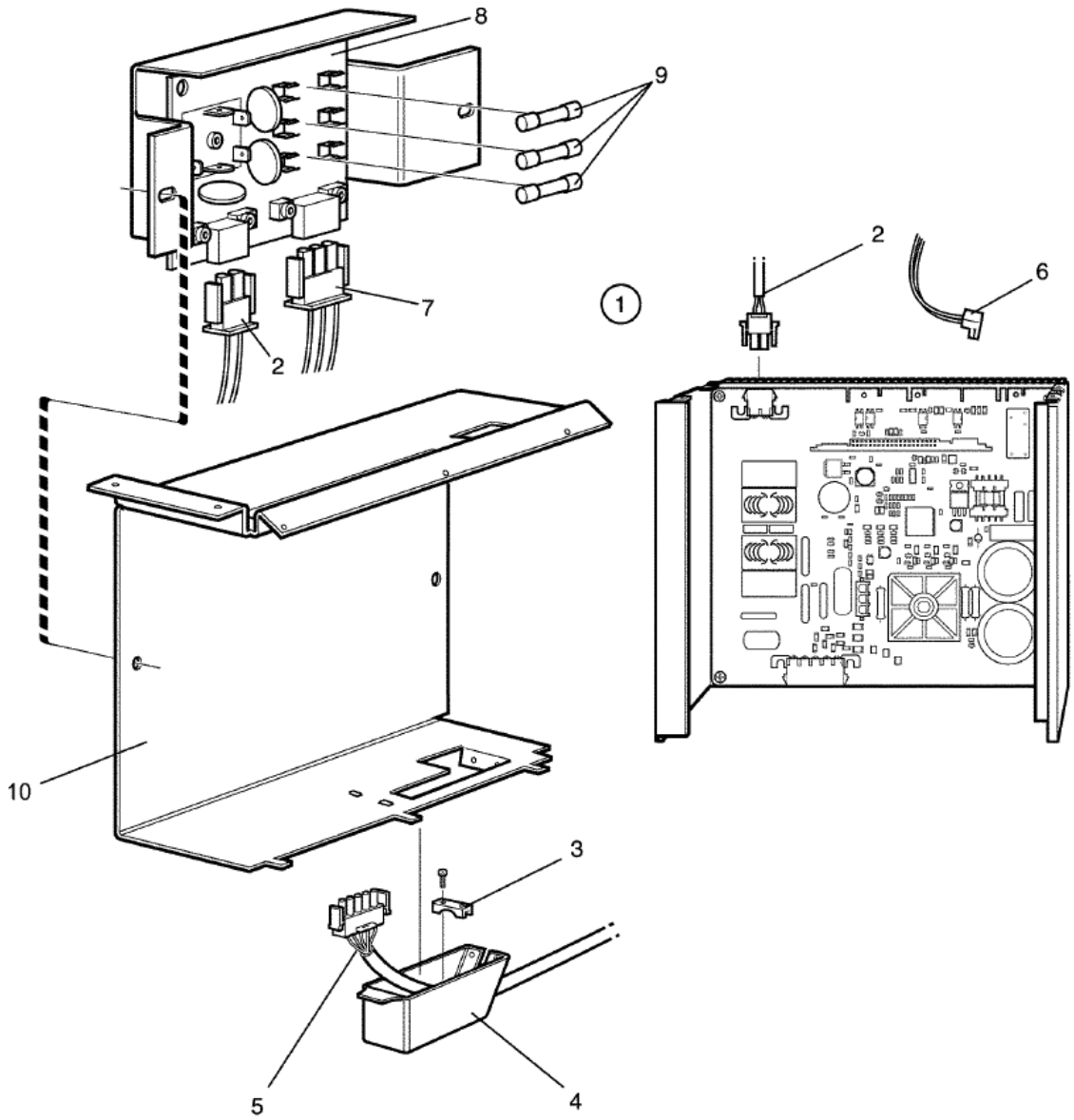

Issue	Month	Year
03	**11**	**11**

102491

W4105H Compass
Motor control
Motorstyrning

Illustration	Issue	Month	
Illustration	Utgåva	Månad	
102491/1	**9**	**3**	**2013**

Pos	Qty	Part.no	Description	Beskrivning	Notes
1	1	472992901	Motor control	Motorstyrning	200-240V Complete -595/999999 -522/411432
1	1	472992931	Motor control unit	Motorstyrningsenhet	200-240V 522/411433-
1	1	472992904	Motor control	Motorstyrning	Japan 200-240V Complete -595/999999 -522/411432
1	1	472992932	Motor control unit	Motorstyrningsenhet	Japan 200-240V 522/411433-
2	1	413291801	• *Cable set*	• *Ledningssats*	2-pole
2	1	413291809	• *Cable set*	• *Ledningssats*	Japan 2-pole
2	1	413291802	• *Cable set*	• *Ledningssats*	Trafo and choke 2-pole
3	1	438979912	Clamp	Klämma	
4	1	438979901	Cover	Kåpa	
6	1	413308421	Cable set	Ledningssats	P-bus-X302
7	1	432296101	Cable set	Ledningssats	3AC
8	1	438877402	Printed circuit board	Kretskort	
9	3	471876802	Fuse	Säkring	15A
10	1	472993801	Cover	Skydd	

info@zipnasklade.ru
8(800)500-69-51

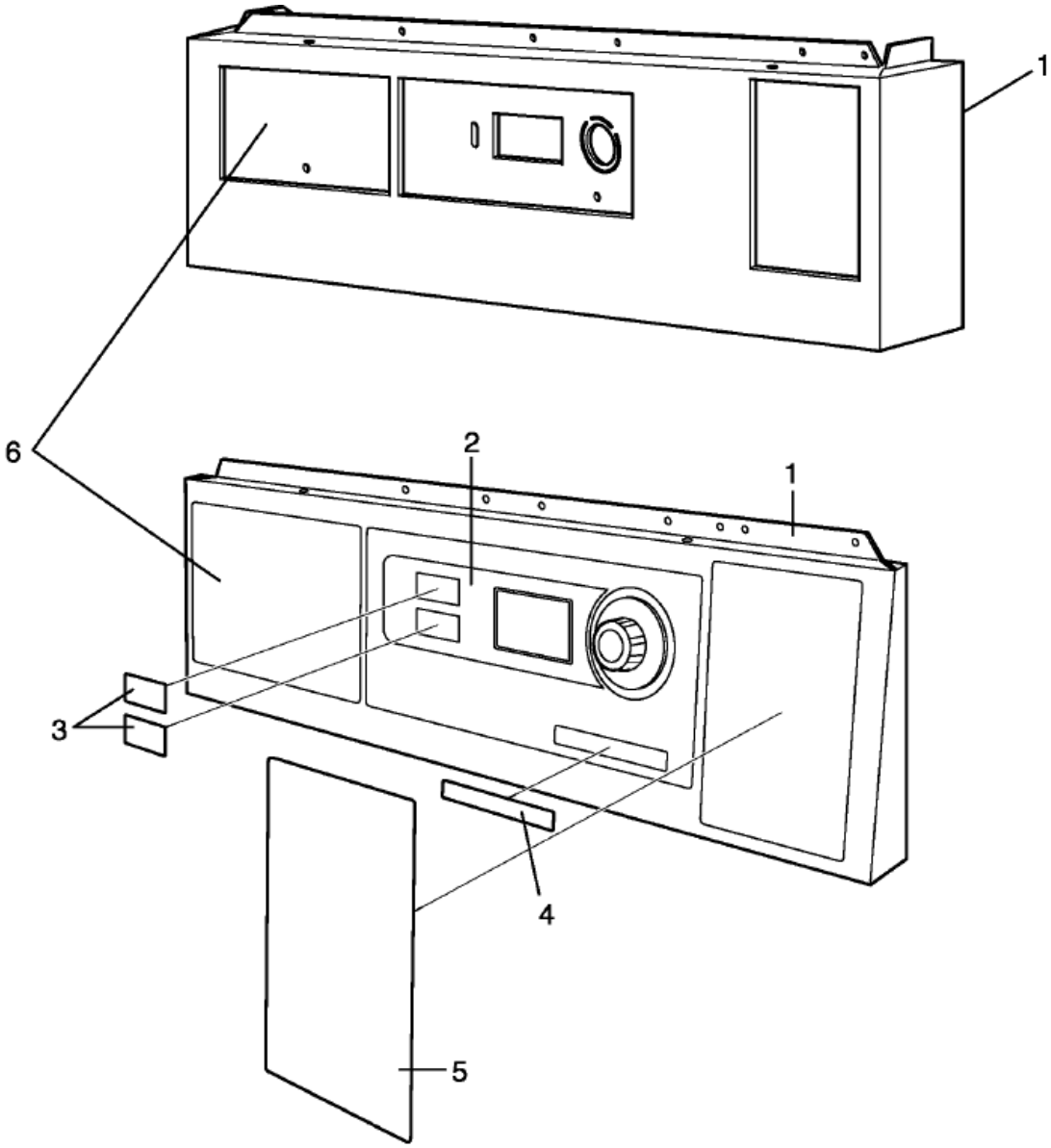

Issue	Month	Year
02	11	07

102378

W4105H Compass
Control panel
Manöverpanel

Illustration	Issue	Month	
Illustration	Utgåva	Månad	
102378/1	**6**	**8**	**2010**

Pos	Qty	Part.no	Description	Beskrivning	Notes
1	1	432226102	Front panel	Frontpanel	
2	1	472579202	Panel sign	Panelskylt	40°, 60°
2	1	472579201	Operation sign	Betjeningsskylt	
2	1	472579210	Panel sign	Panelskylt	1&2
2	1	472579301	Panel sign	Panelskylt	NEUTRAL NEUTRAL
3	1	471778810	Sign	Skylt	
4	1	413260301	Type plate	Typskylt	W4105H
4	1	413261107	Type plate	Typskylt	EX625co
4	1	413261151	Type plate	Typskylt	EX625cc
5	1	432215011	Cover plate	Täckplåt	
6	1	432264721	Instruction plate	Instruktionsskylt	Swedish
6	1	432264723	Instruction plate	Instruktionsskylt	40°, 60°
6	1	432264724	Instruction plate	Instruktionsskylt	1, 2
6	1	432264726	Instruction plate	Instruktionsskylt	NEUTRAL
6	1	432264727	Instruction plate	Instruktionsskylt	Japan, 3L41
6	1	432264729	Instruction plate	Instruktionsskylt	Japan, 3L41 Payment
6	1	432264730	Instruction plate	Instruktionsskylt	COIN USA English/Spanish
6	1	432264726	Instruction plate	Instruktionsskylt	USA, OPL
6	1	432264731	Instruction plate	Instruktionsskylt	3M14 Swedish

info@zipnasklade.ru
8(800)500-69-51

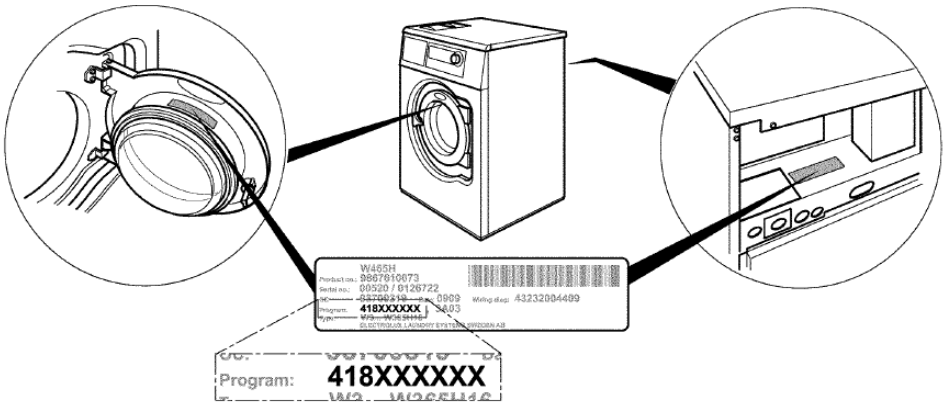

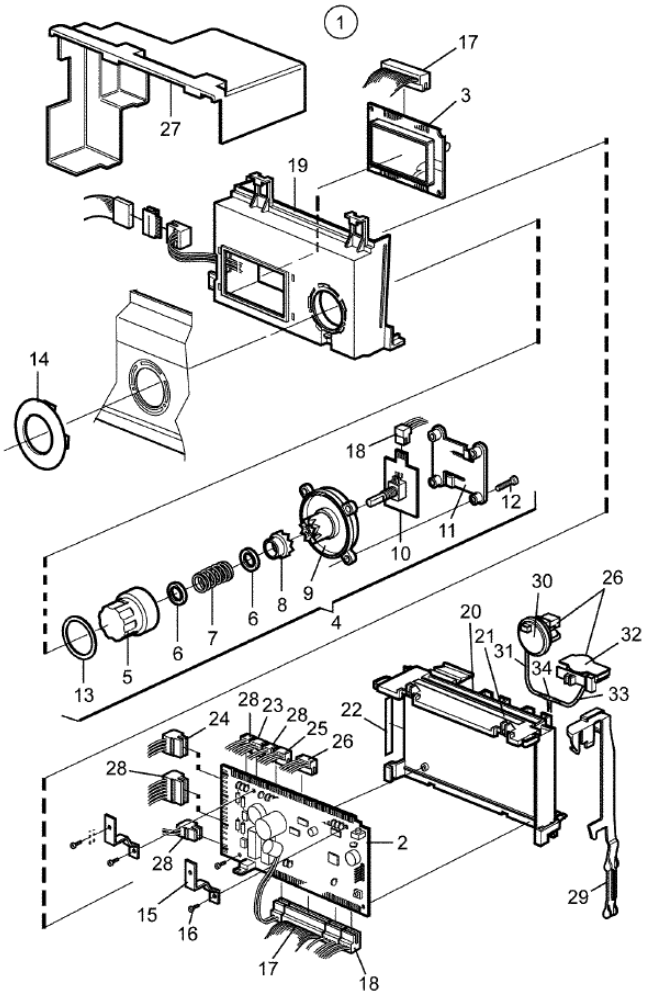

102679

Issue	Month	Year
01	02	10

W4105H Compass
Programmer
Programverk

Illustration	Issue	Month	
Illustration	Utgåva	Månad	
102679/0	**3**	**3**	**2012**

Pos	Qty	Part.no	Description	Beskrivning	Notes
1	1	432690204	Programmer	Programverk	Without software. Software available on website
1	1	432690206	Programmer	Programverk	Japan Without software. Software available on website
2	1	*	• *Printed circuit board*	• *Kretskort*	CPU
3	1	432870203	• *Display*	• *Display*	
4	1	472990497	• *Program selector*	• *Programväljare*	
5	1	*	•• *Knob*	•• *Vred*	
6	2	*	•• *Rubber washer*	•• *Gummibricka*	
7	1	*	•• *Spring*	•• *Fjäder*	
8	1	*	•• *Sleeve*	•• *Hylsa*	
9	1	*	•• *Cover*	•• *Lock*	
10	1	438965901	•• *Program selector*	•• *Programväljare*	
11	1	*	•• *Spring*	•• *Fjäder*	
12	4	471834609	•• *Screw*	•• *Skruv*	T40x30
13	1	*	•• *Ring*	•• *Ring*	
14	1	432634402	• *Locking ring*	• *Låsring*	
15	2	432632701	• *Bracket*	• *Hållare*	
16	2	471834602	• *Screw*	• *Skruv*	
17	1	413328001	• *Cable set*	• *Ledningssats*	
18	1	413327420	• *Cable set*	• *Ledningssats*	4-pole
19	1	432632501	• *Cover*	• *Kåpa*	Front
20	1	432632401	• *Cover*	• *Kåpa*	Rear
21	1	471467395	• *Sign*	• *Skylt*	
22	1	471467397	Sign	Skylt	
23	1	413327418	Cable set	Ledningssats	D-bus
24	1	413308416	Cable set	Ledningssats	P-bus
25	1	413327413	Cable set	Ledningssats	M-COM
26	1	413327502	Cable set	Ledningssats	Level control
27	1	432632601	Cover	Skydd	
28	1	432290509	Cable set	Ledningssats	Door/Temp./Tacho.
29	1	432634501	Arm	Arm	

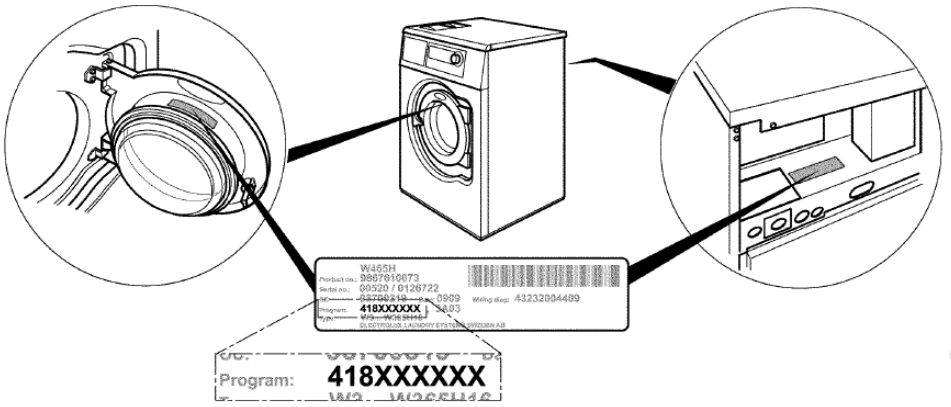

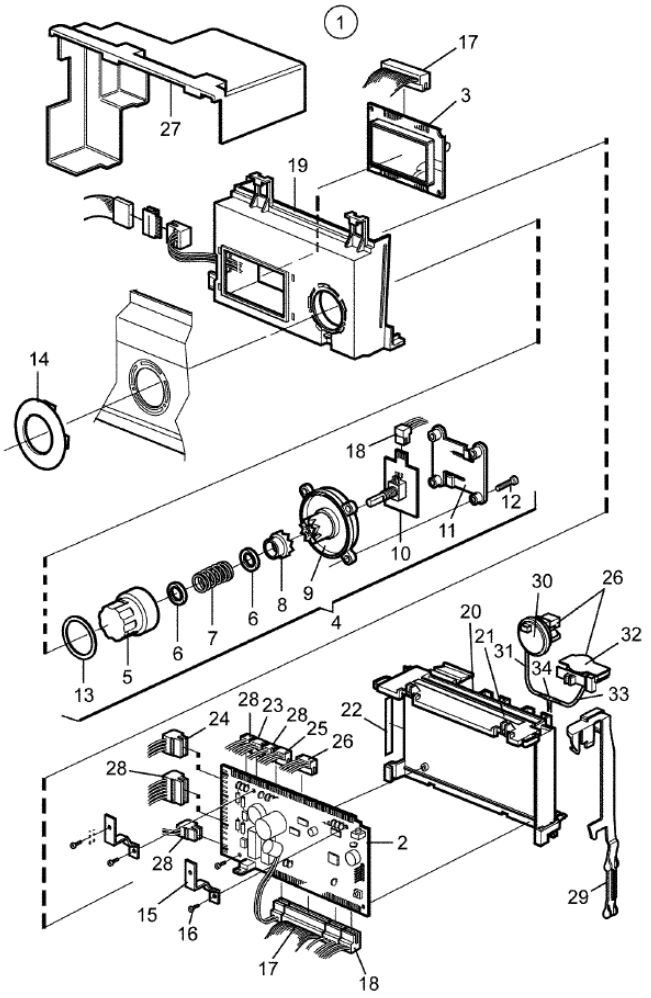

102679

Issue	Month	Year
01	02	10

Pos	Qty	Part.no	Description	Beskrivning	Notes
30	1	471886101	Level guard	Nivåvakt	
31	1	471244241	Hose	Slang	L=70
32	1	471886301	Level guard	Nivåvakt	
33	1	438244002	Hose	Slang	L=100
34	1	471226569	T-pipe	T-rör	

info@zipnasklade.ru
8(800)500-69-51

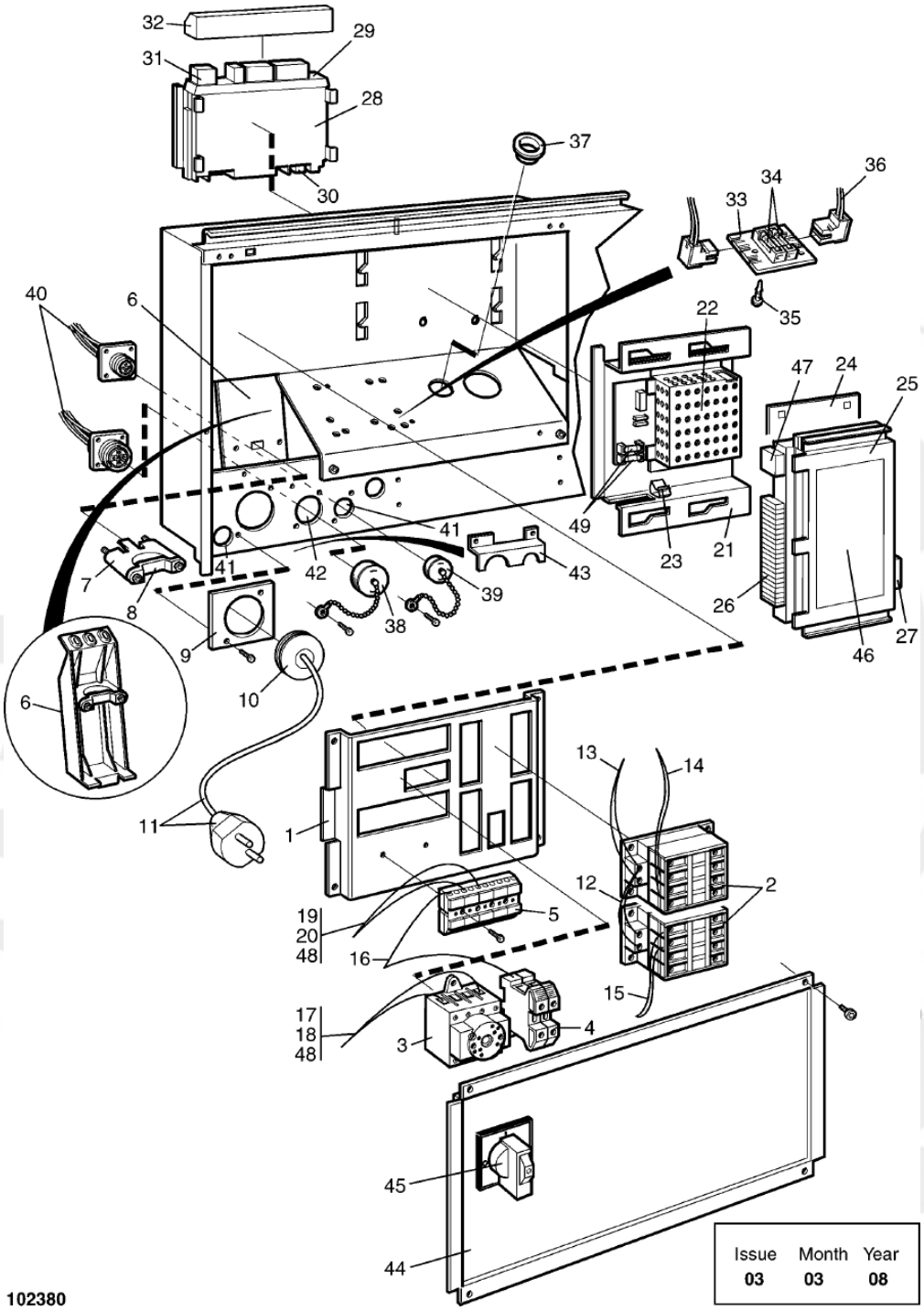

Issue	Month	Year
03	03	08

W4105H Compass
Electric components connection
Eldetaljer anslutning

Illustration Illustration	Issue Utgåva	Month Månad	
102380/1	**9**	**6**	**2017**

Pos	Qty	Part.no	Description	Beskrivning	Notes
1	1	432215401	Mounting plate	Monteringsplåt	
2	Rq	438963622	Contactor	Kontaktor	220-240V 50Hz
2	Rq	438963623	Contactor	Kontaktor	200-220V 60Hz
2	Rq	438963624	Contactor	Kontaktor	50/60Hz
3	Rq	438967801	Main switch	Huvudbrytare	3-pole, 32A
3	Rq	438967802	Main switch	Huvudbrytare	3-pole, 40A
3	Rq	438967803	Main switch	Huvudbrytare	3-pole, 63A
3	Rq	438967804	Main switch	Huvudbrytare	3-pole, 80A
3	Rq	438967811	Main switch	Huvudbrytare	4-pole, 32A
3	Rq	438967812	Main switch	Huvudbrytare	4-pole, 40A
3	Rq	438967813	Main switch	Huvudbrytare	4-pole, 63A
3	Rq	438967814	Main switch	Huvudbrytare	4-pole, 80A
4	2	471876701	Ground terminal	Jordplint	SL10
4	2	471876702	Block	Plint	SL16
5	1	471878301	Block	Plint	
5	1	471878303	Block	Plint	3-pole
5	1	471878304	Block	Plint	4-pole
6	1	432225801	Plate	Plåt	
6	1	432221401	Cable clamp	Kabelklämma	PLASTIC
7	1	471785912	Clamp	Klämma	Lower part
8	1	471785916	Clamp	Klämma	Upper part
9	1	432219901	Plate	Plåt	Ø21
9	1	432219903	Plate	Plåt	Ø26
9	1	432219905	Plate	Plåt	Ø33
10	1	438872001	Grommet	Genomföring	M25
10	1	438872002	Grommet	Genomföring	M32
10	1	438872003	Grommet	Kabelgenomföring	M40
11	1	487170245	Plug	Stickpropp	Japan
12	1	432298401	Cable set	Ledningssats	
13	1	413318202	Cable set	Ledningssats	Heating

info@zipnasklade.ru
8(800)500-69-51

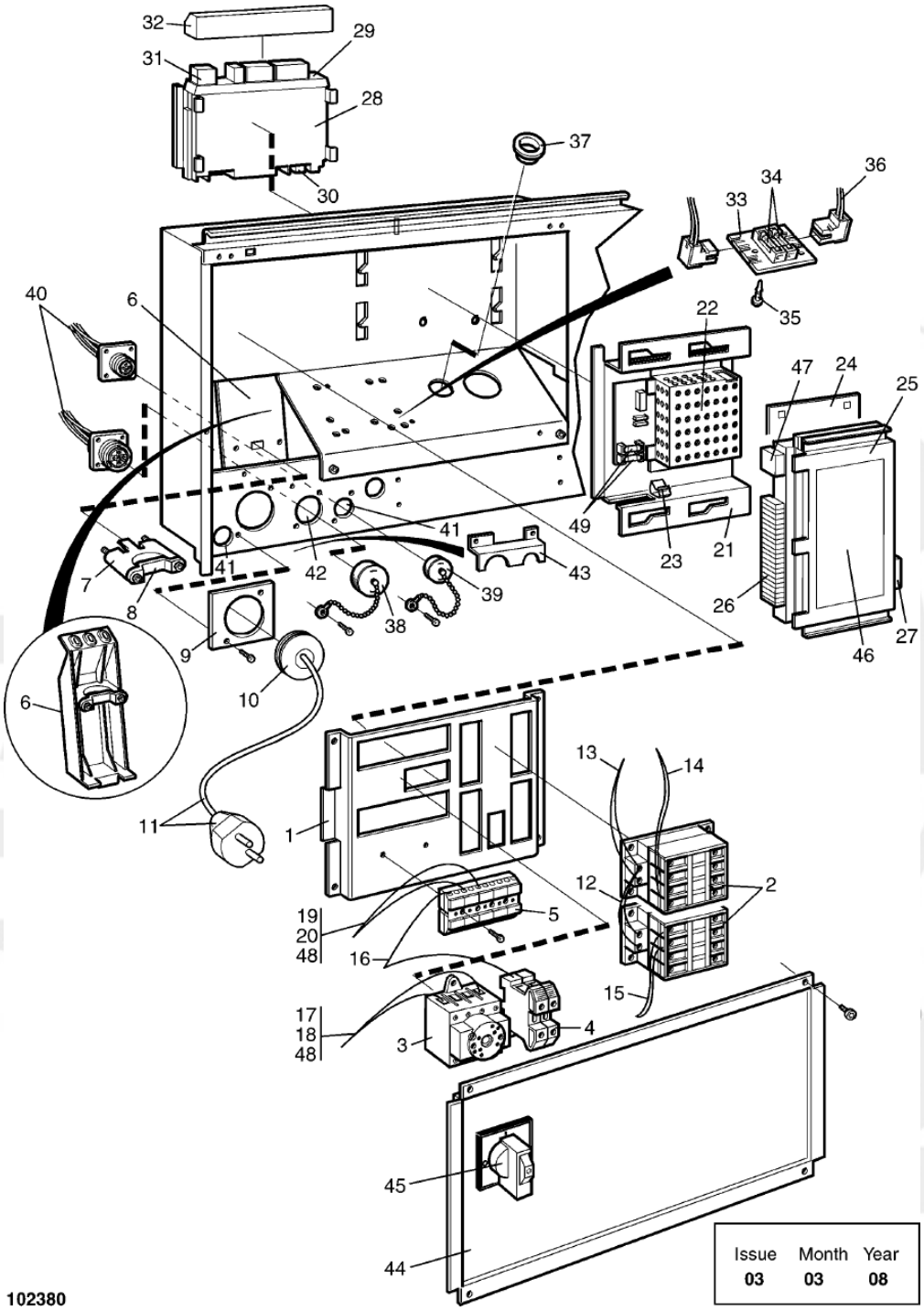

Issue	Month	Year
03	03	08

Pos	Qty	Part.no	Description	Beskrivning	Notes
14	3	432295403	Cable set	Ledningssats	
15	3	432295413	Cable set	Ledningssats	
16	1	432298303	Cable set	Ledningssats	
17	1	432309286	Cable set	Ledningssats	
18	1	432310601	Cable set	Ledningssats	Trafo
19	1	413308235	Cable set	Ledningssats	
20	1	413290502	Cable set	Ledningssats	Trafo Trafo
21	1	432225701	Mounting plate	Monteringsplåt	
22	1	432680506	Power supply	Strömförsörjning	3,15 A
23	1	432632001	Clamp	Klämma	
24	1	432225601	Plate	Plåt	
25	1	432713063	I/O module	I/O modul	
26	Rq	438870101	Multistik	Kantanslutning	
26	Rq	438870103	Multistik	Kantanslutning	
27	1	413327401	Cable set	Ledningssats	
28	1	432690302	I/O module	I/O modul	Type 11
28	1	432693302	Printed circuit board	Kretskort	I/O-card type 3
30	1	413327403	Cable set	Ledningssats	4-pole
31	1	413308425	Cable set	Ledningssats	4-pole
32	1	432632301	Cover	Skydd	
33	1	438879702	Printed circuit board	Kretskort	
34	2	471875011	• *Fuse*	• *Säkring*	1,25A
35	3	471796002	Support	Stöd	
36	1	413308205	Cable set	Ledningssats	
37	1	762118210	Grommet	Genomföring	Ø22,2MM
38	1	438795002	Cover washer	Täckbricka	14-pole
39	1	438795001	Cover washer	Täckbricka	4-pole
40	1	413294601	Cable set	Ledningssats	
41	2	471797703	Blind plug	Blindpropp	Ø22
42	1	471797704	Blind plug	Blindpropp	Ø28

info@zipnaskiade.ru
8(800)500-69-51

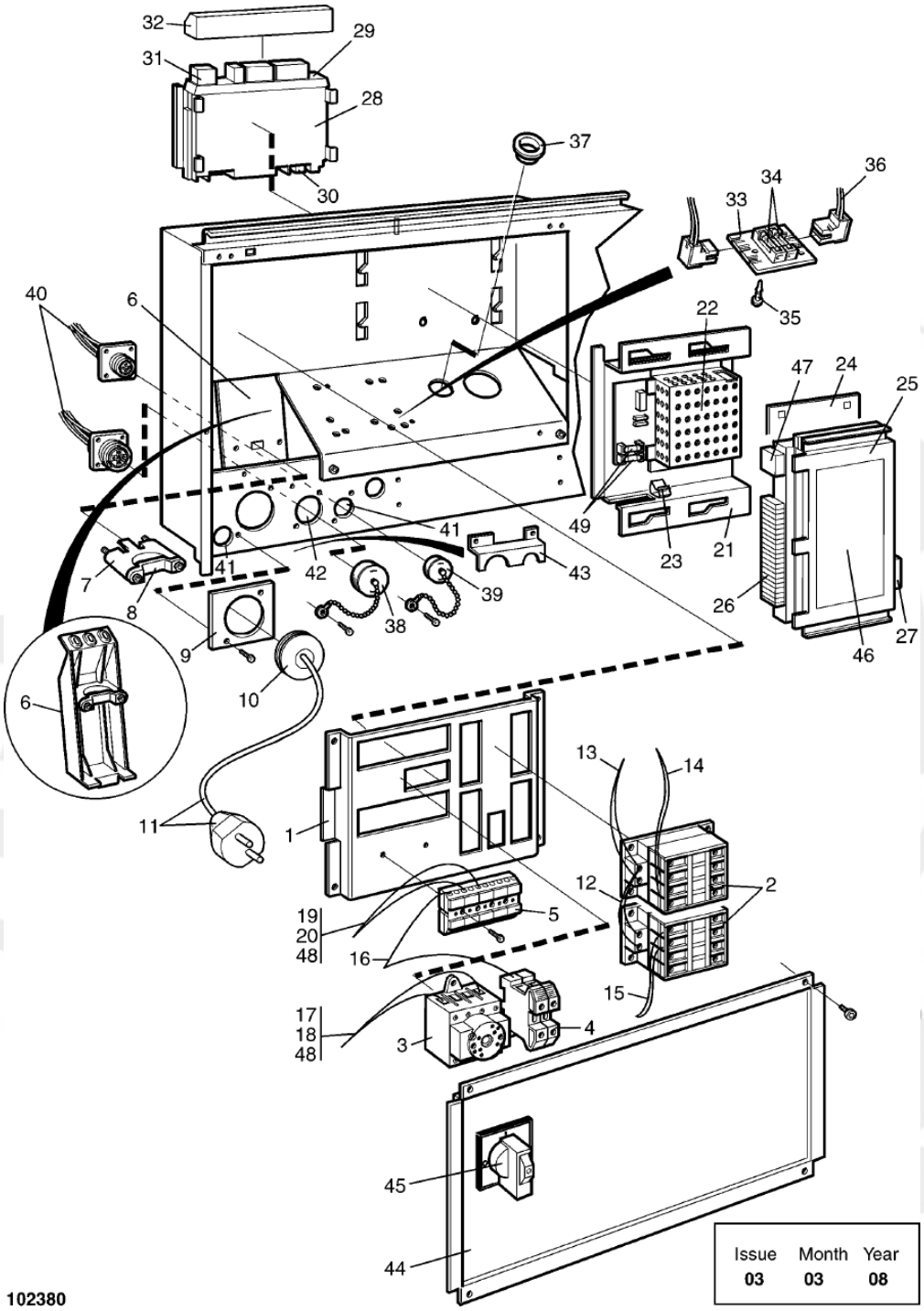

Issue	Month	Year
03	03	08

Pos	Qty	Part.no	Description	Beskrivning	Notes
43	1	432122001	Cover	Skydd	
44	1	432360401	Cover	Lock	With hole
44	1	432360402	Cover	Lock	Without hole
45	1	471967894	Turning device	Vriddon	
46	1	471467393	Sign	Skylt	I/O-card type 2
47	1	413308402	Cable set	Ledningssats	P-bus 4-pole
48	1	413291802	Cable set	Ledningssats	Trafo and choke 2-pole
49	2	471875016	Fuse	Säkring	3,15A

info@zipnasklade.ru
8(800)500-69-51

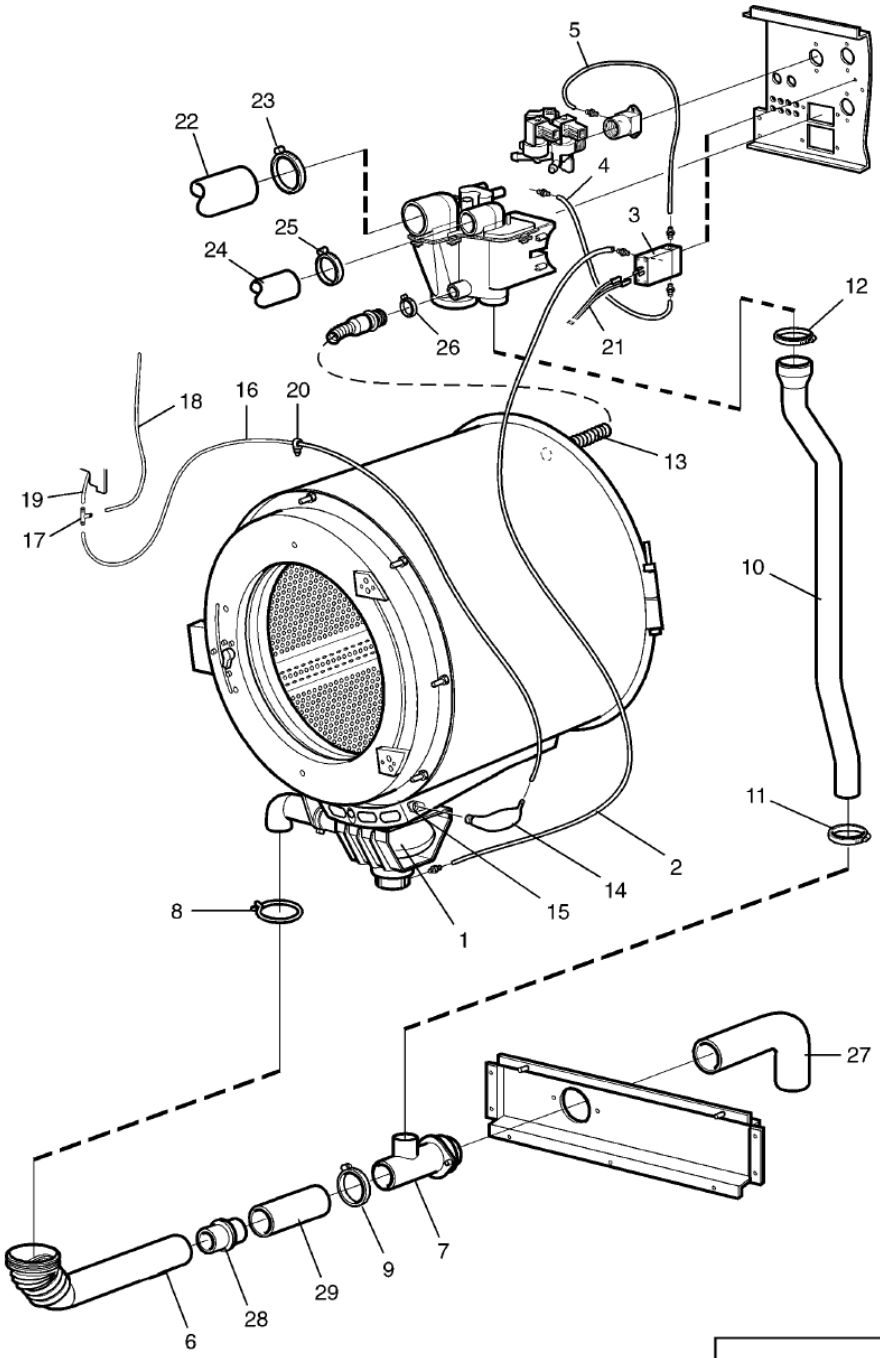

Issue	Month	Year
01	06	07

102485

W4105H Compass
Drain valve and hoses
Avloppsventil och slangar

Illustration Illustration	Issue Utgåva	Month Månad	
102485/1	**10**	**5**	**2016**

Pos	Qty	Part.no	Description	Beskrivning	Notes
1	1	432250201	Drain valve	Avloppsventil	
2	1	471813911	Hose	Slang	L=1900
3	1	471824307	Solenoid valve	Magnetventil	230V 50Hz
3	1	471824308	Solenoid valve	Magnetventil	208-240V 60Hz
3	1	471824309	Solenoid valve	Magnetventil	120V 60Hz
3	1	471824310	Solenoid valve	Magnetventil	Japan 230V 50/60Hz
4	1	438810206	Hose	Slang	L=450
5	1	471813901	Hose	Slang	L=330
6	1	432251501	Hose	Slang	
7	1	432251001	Drain pipe connection	Avloppsstos	-595/107230
7	1	413500401	Drain pipe connection	Avloppsstos	595/107231-
8	1	471787107	Hose clamp	Slangklämma	
9	1	736283751	Hose clamp	Slangklämma	Ø48-54
10	1	432252002	Hose	Slang	
11	1	736283151	Hose clamp	Slangklämma	Ø36-42
12	1	736283751	Hose clamp	Slangklämma	Ø48-54
13	1	432250801	Hose	Slang	
14	1	432250701	Air tube	Luftklocka	
15	1	432250601	Connection	Anslutning	
16	1	438812001	Hose	Slang	L=940
17	1	471226569	T-pipe	T-rör	
18	1	471244242	Hose	Slang	L=120
19	1	471246418	Hose	Slang	L=280
20	3	471788701	Clip	Clips	
21	1	432318241	Cable set	Ledningssats	
22	1	471812866	Hose	Slang	
23	2	736284051	Hose clamp	Slangklämma	Ø50-63
24	1	471812402	Hose	Slang	
25	2	736283151	Hose clamp	Slangklämma	Not used Ø36-42
26	1	736282551	Hose clamp	Slangklämma	Not used Ø32

info@zipnasklade.ru
8(800)500-69-51

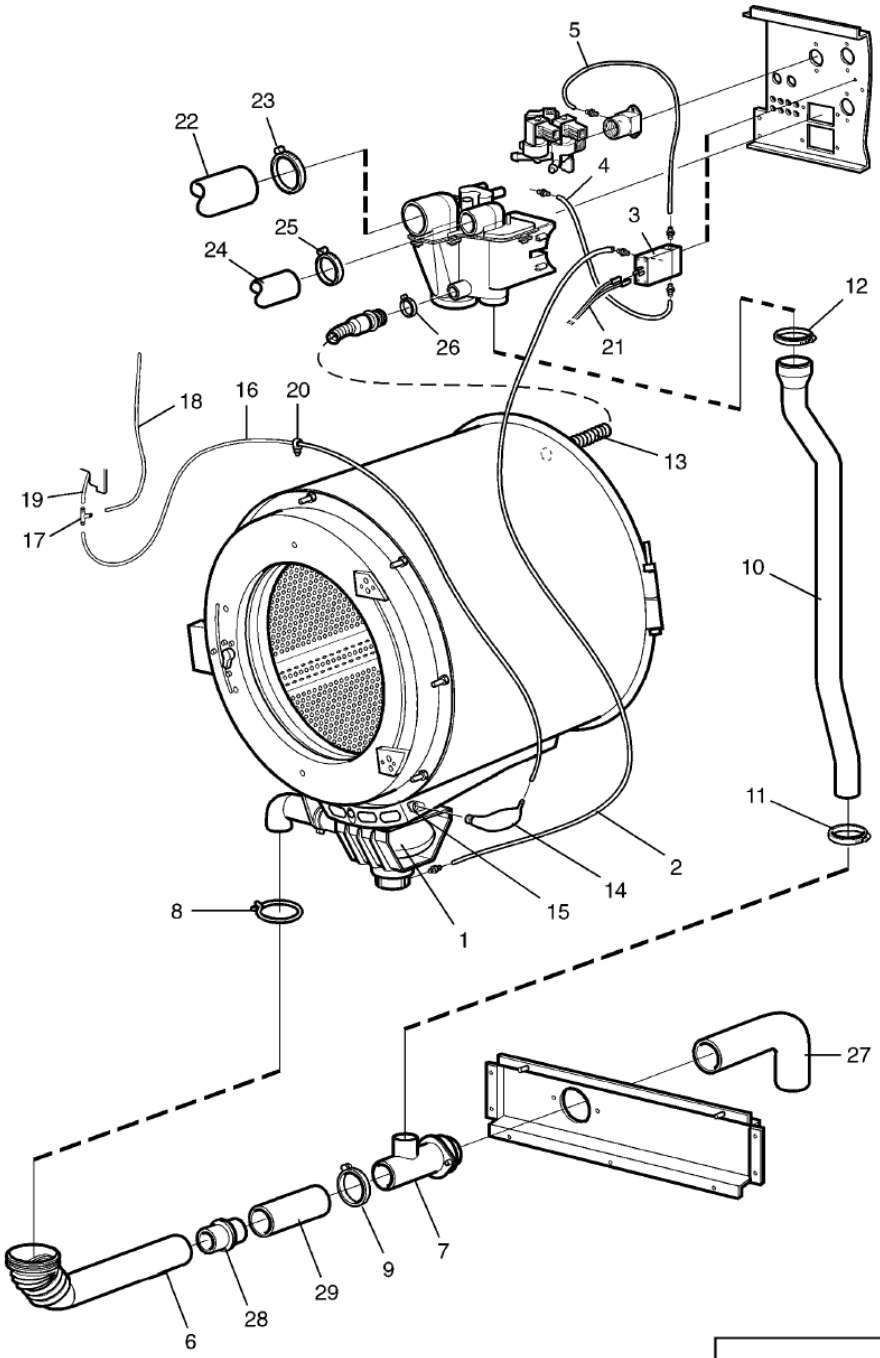

Issue	Month	Year
01	06	07

102485

W4105H Compass
Drain valve and hoses
Avloppsventil och slangar

Illustration Illustration	Issue Utgåva	Month Månad	
102485/1	**10**	**5**	**2016**

Pos	Qty	Part.no	Description	Beskrivning	Notes
27	1	438504001	Drain hose	Avloppsslang	Ø50
27	1	471483501	Drain hose	Avloppsslang	Ø75

info@zipnasklade.ru
8(800)500-69-51

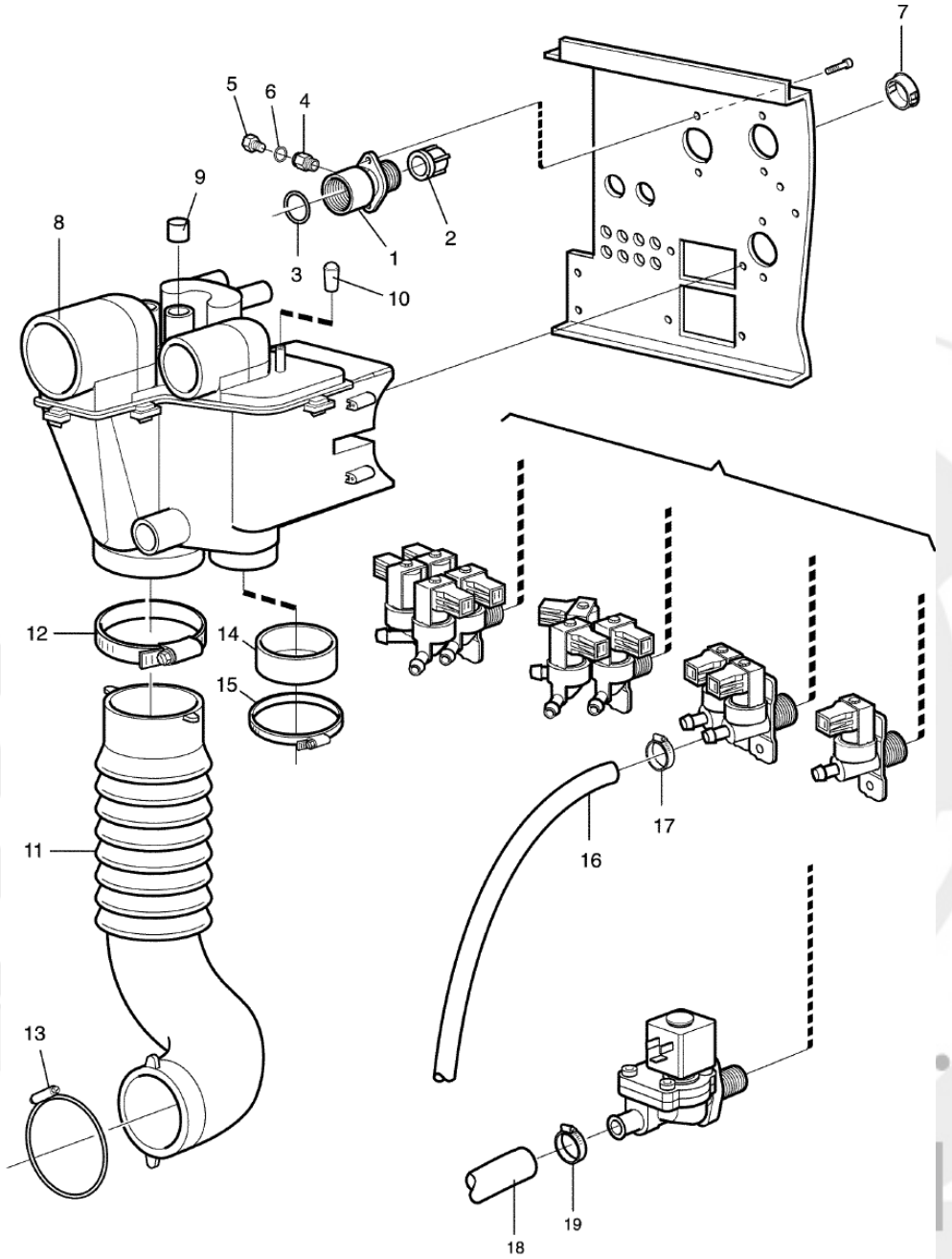

Issue	Month	Year
02	02	12

102316

W4105H Compass
Water connections
Vattenanslutningar

Illustration	Issue	Month	
Illustration	Utgåva	Månad	
102316/1	**4**	**4**	**2012**

Pos	Qty	Part.no	Description	Beskrivning	Notes
1	1	438005603	Nipple	Nippel	Black, 3/4"
1	1	438005604	Nipple	Nippel	White, 3/4", USA
2	1	471869321	Filter	Filter	
3	1	471819901	Gasket	Packning	
4	1	471868813	Nipple	Nippel	1/8''
5	1	741510925	Plug	Propp	El-drain
6	1	740420600	O-ring	O-ring	El-drain
7	Rq	471797704	Blind plug	Blindpropp	Ø28
8	1	432230101	Siphon breaker	Återsugningsskydd	
9	Rq	471817501	Plug	Plugg	
10	1	471864402	Plug	Propp	
11	1	432230501	Hose	Slang	
12	1	736284651	Hose clamp	Slangklämma	Ø73-83
13	1	471787108	Hose clamp	Slangklämma	Ø69
14	1	471240989	Hood	Huv	Pump
15	1	736283751	Hose clamp	Slangklämma	Pump Ø48-54
16	Rq	877521108	Hose	Slang	Per 1 m
17	Rq	736281651	Hose clamp	Slangklämma	Ø13-19
18					Not used
19					Not used

info@zipnasklade.ru
8(800)500-69-51

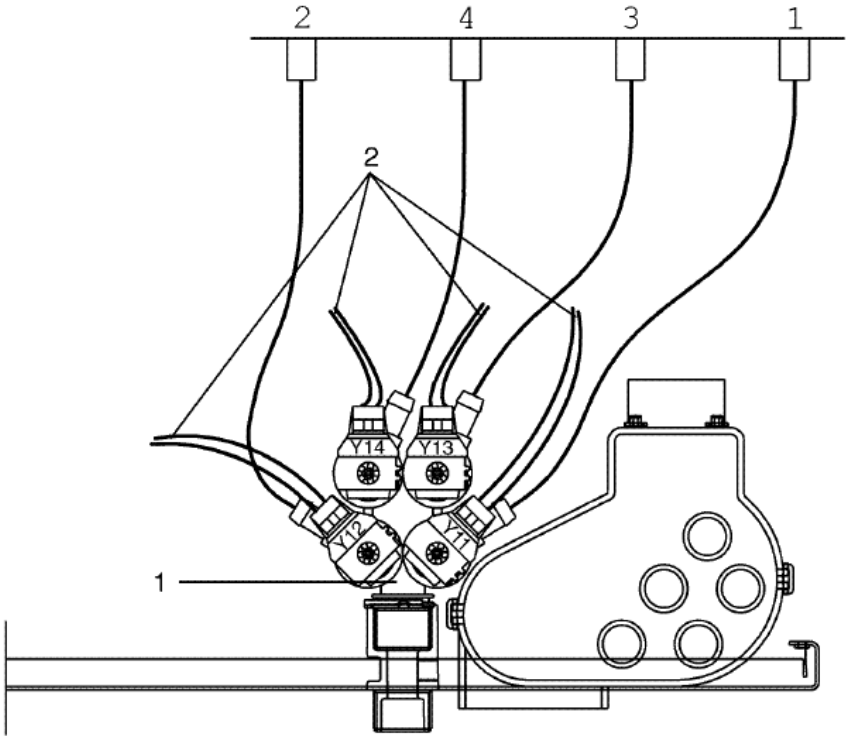

Issue	Month	Year
01	12	06

102481

W4105H Compass
Inlet valves and cable set
Inloppsventiler och ledningssatser

Illustration	Issue	Month	
Illustration	Utgåva	Månad	
102481/1	**2**	**11**	**2009**

Pos	Qty	Part.no	Description	Beskrivning	Notes
1	1	471824063	Valve	Ventil	4-way, 208-240V 50/60Hz, BSP
2	1	413308807	Cable set	Ledningssats	

info@zipnasklade.ru
8(800)500-69-51

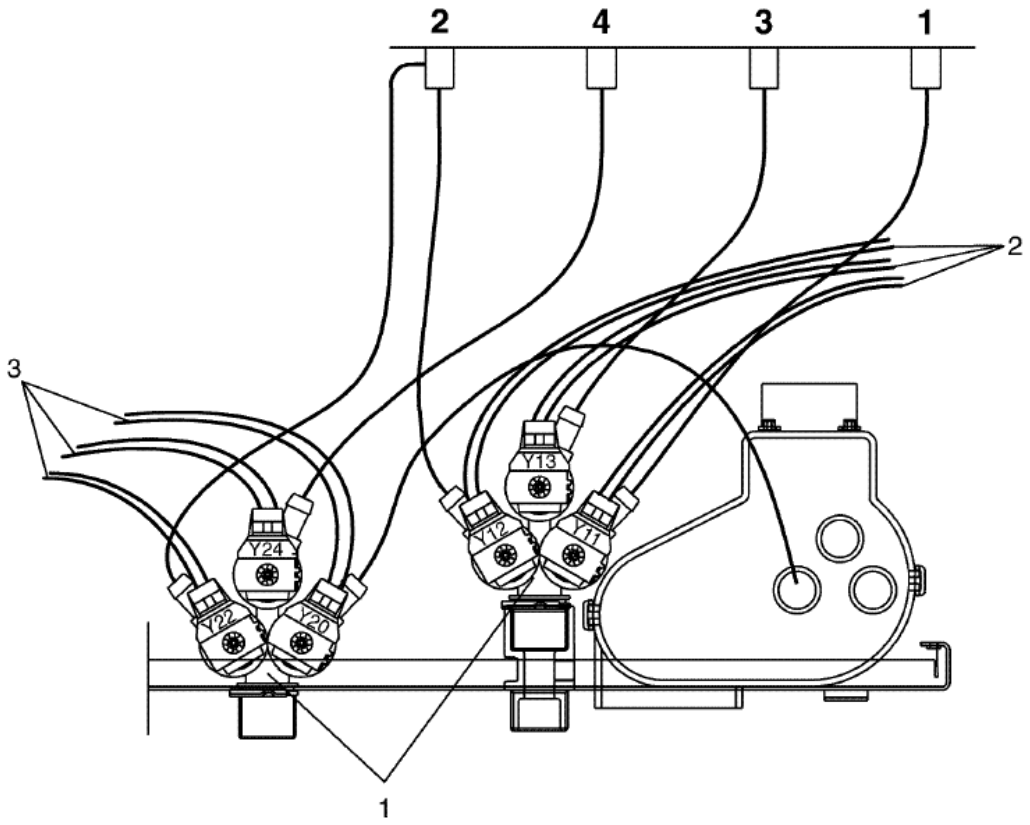

Issue	Month	Year
01	12	06

102482

W4105H Compass
Inlet valves and cable set
Inloppsventiler och ledningssatser

Illustration Illustration	Issue Utgåva	Month Månad	
102482/1	**2**	**11**	**2009**

Pos	Qty	Part.no	Description	Beskrivning	Notes
1	2	471823676	Valve	Ventil	3-way, 208-240V 50/60Hz, BSP
1	2	471823678	Valve	Ventil	US 3-way, 208-240V 50/60Hz, NH USA
2	1	413308607	Cable set	Ledningssats	Cold
3	1	413308608	Cable set	Ledningssats	Hot

info@zipnasklade.ru
8(800)500-69-51

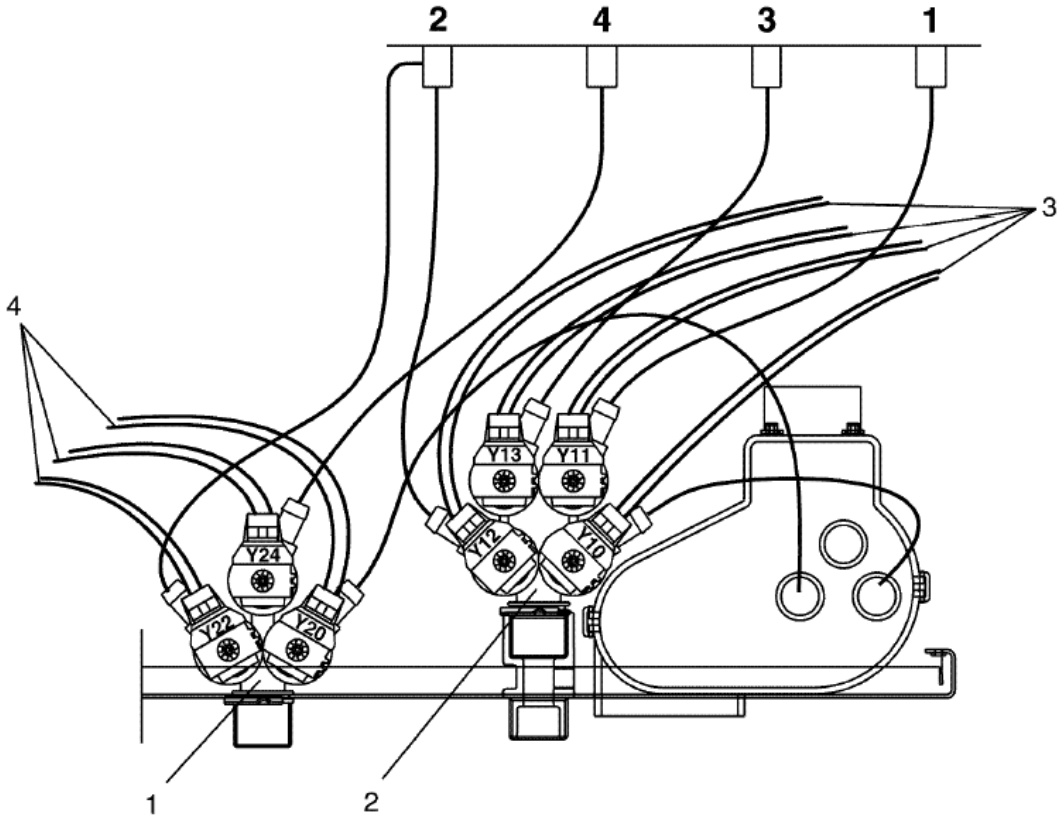

Issue	Month	Year
01	12	06

102483

W4105H Compass
Inlet valves and cable set
Inloppsventiler och ledningssatser

Illustration Illustration	Issue Utgåva	Month Månad	
102483/1	**2**	**11**	**2009**

Pos	Qty	Part.no	Description	Beskrivning	Notes
1	1	471823676	Valve	Ventil	3-way, 208-240V 50/60Hz, BSP
1	1	471823678	Valve	Ventil	US 3-way, 208-240V 50/60Hz, NH USA
2	1	471824064	Valve	Ventil	4-way, 208-240V 50/60Hz, BSP
2	1	471824068	Valve	Ventil	US 4-way, 208-240V 50/60Hz, NH USA
3	1	413308807	Cable set	Ledningssats	
4	1	413308608	Cable set	Ledningssats	

info@zipnasklade.ru
8(800)500-69-51

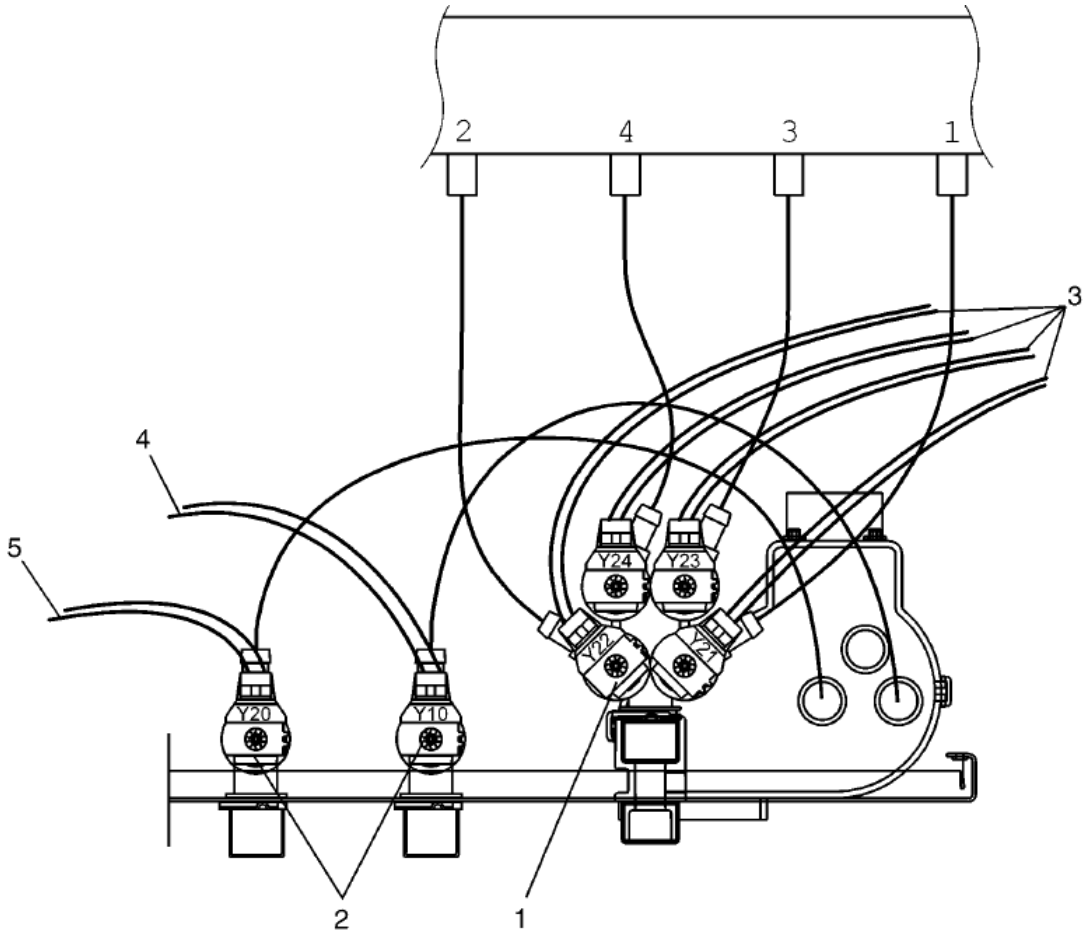

Issue	Month	Year
01	12	06

102384

W4105H Compass
Inlet valves and cable set
Inloppsventiler och ledningssatser

Illustration Illustration	Issue Utgåva	Month Månad	
102384/1	**2**	**11**	**2009**

Pos	Qty	Part.no	Description	Beskrivning	Notes
1	1	471824063	Valve	Ventil	4-way, 208-240V 50/60Hz, BSP
1	1	471824069	Valve	Ventil	USA 4-way, 208-240V 50/60Hz, NH USA
2	2	471823452	Valve	Ventil	1-way, 208-240V 50/60Hz, BSP
2	2	471823464	Valve	Ventil	USA 1-way, 208-240V 50/60Hz, NH USA
3	1	413308807	Cable set	Ledningssats	Cold
4	1	413308229	Cable set	Ledningssats	Cold
5	1	413308230	Cable set	Ledningssats	Hot

info@zipnasklade.ru
8(800)500-69-51

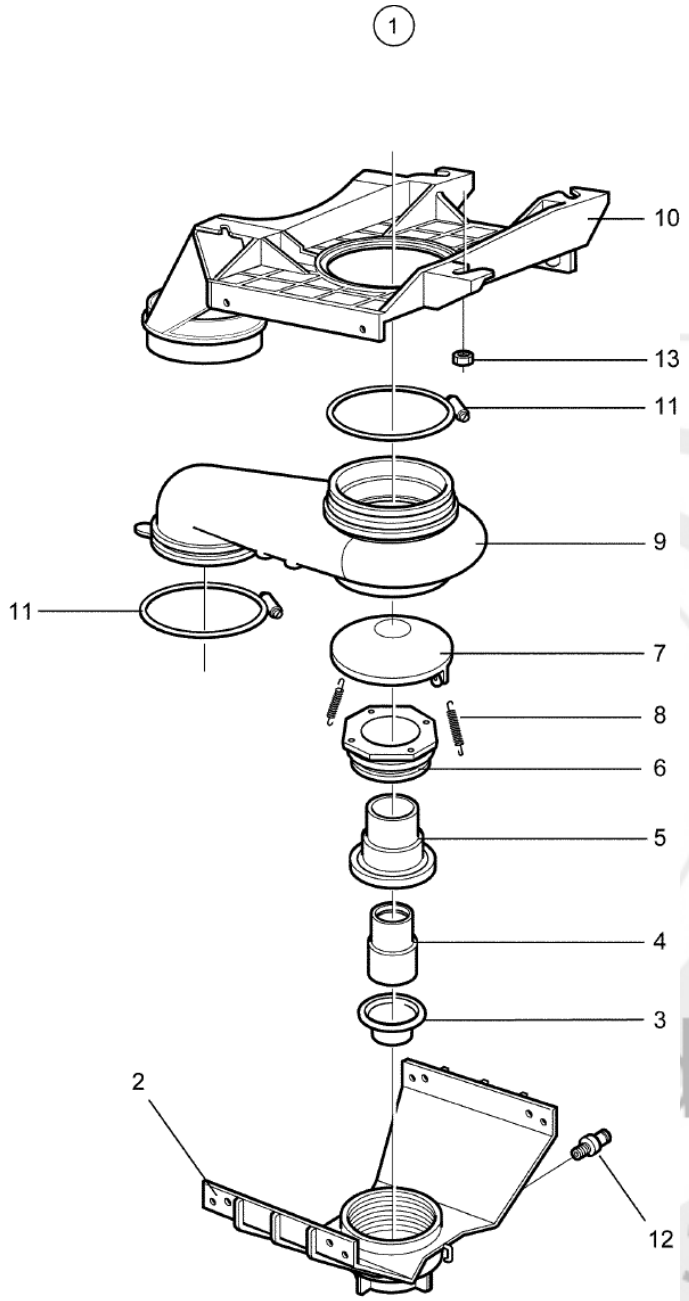

102343_02

W4105H Compass
Drain valve
Avloppsventil

Illustration	Issue	Month	
Illustration	Utgåva	Månad	
102343/1	**3**	**12**	**2013**

Pos	Qty	Part.no	Description	Beskrivning	Notes
1	1	432250201	Drain valve	Avloppsventil	
2	1	438005101	• *Lower frame*	• *Underdel*	
3	1	471819501	• *Diaphragm*	• *Membran*	
4	1	438005401	• *Piston*	• *Kolv*	
5	1	438005301	• *Housing*	• *Hus*	
6	1	438005501	• *Gland*	• *Gland*	
7	1	438005201	• *Cover*	• *Lock*	
8	2	471781801	• *Spring*	• *Fjäder*	
9	1	432250501	• *Hose housing*	• *Slanghus*	
10	1	432250101	• *Upper frame*	• *Överdel*	
11	2	471787104	• *Hose clamp*	• *Slangklämma*	
12	1	471868813	• *Nipple*	• *Nippel*	1/8''
13	4	471840403	Nut	Mutter	M6 Stainless

info@zipnasklade.ru
8(800)500-69-51

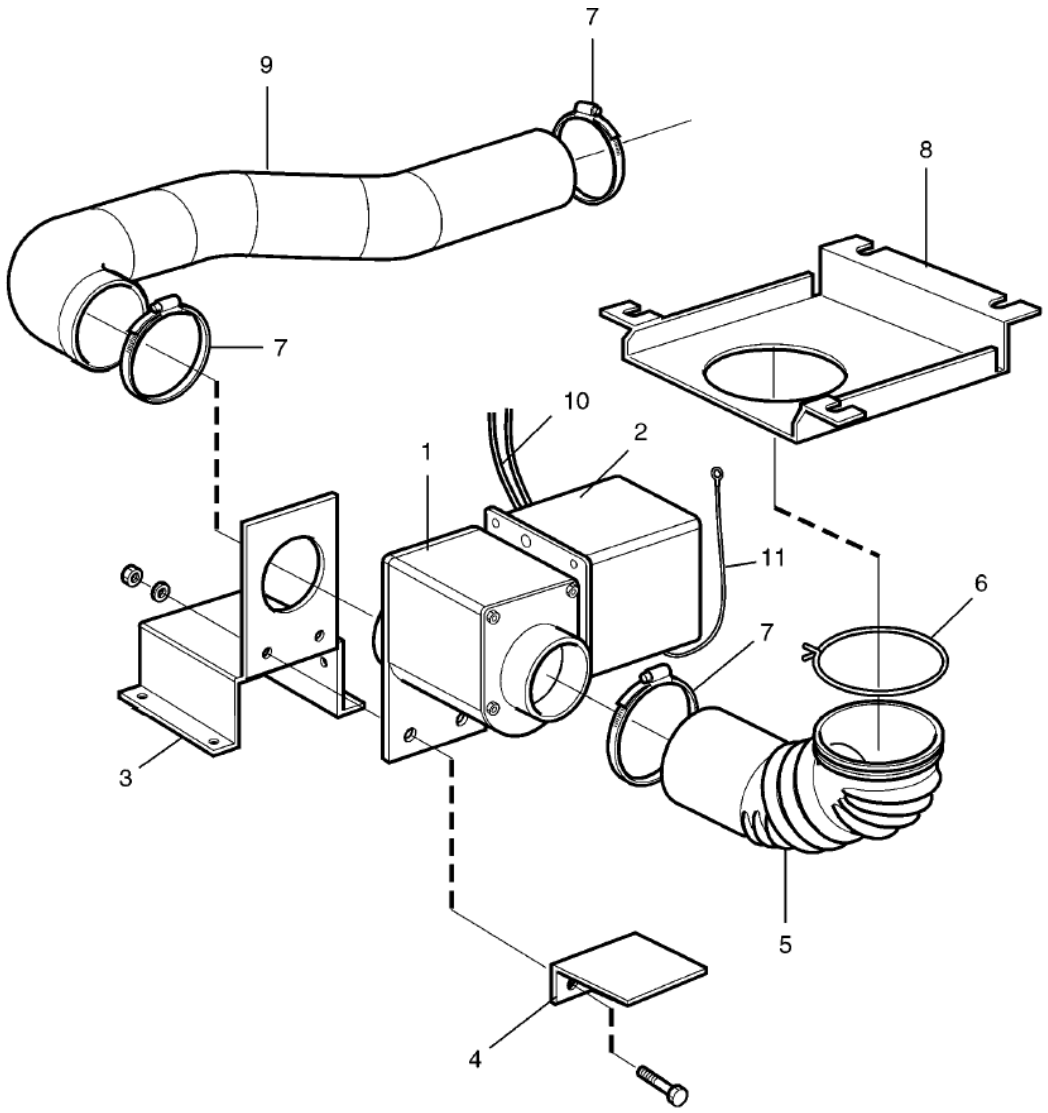

Issue	Month	Year
01	01	07

102492

W4105H Compass
Drain valve, electrical
Avloppsventil, elektrisk

Illustration	Issue	Month	
Illustration	Utgåva	Månad	
102492/1	**1**	**1**	**2007**

Pos	Qty	Part.no	Description	Beskrivning	Notes
1	1	471921965	Drain valve	Avloppsventil	50/60Hz
2	1	432254801	Cover	Kåpa	
3	1	432253002	Mounting plate	Fästplåt	
4	1	432253601	Support	Stöd	
5	1	432252402	Hose	Slang	
6	1	471787107	Hose clamp	Slangklämma	
7	3	736283751	Hose clamp	Slangklämma	Ø48-54
8	1	432253401	Mounting plate	Fästplåt	
9	1	432251701	Hose	Slang	
10	1	413290204	Cable set	Ledningssats	
11	1	432298210	Ground cable	Jordkabel	

info@zipnasklade.ru
8(800)500-69-51

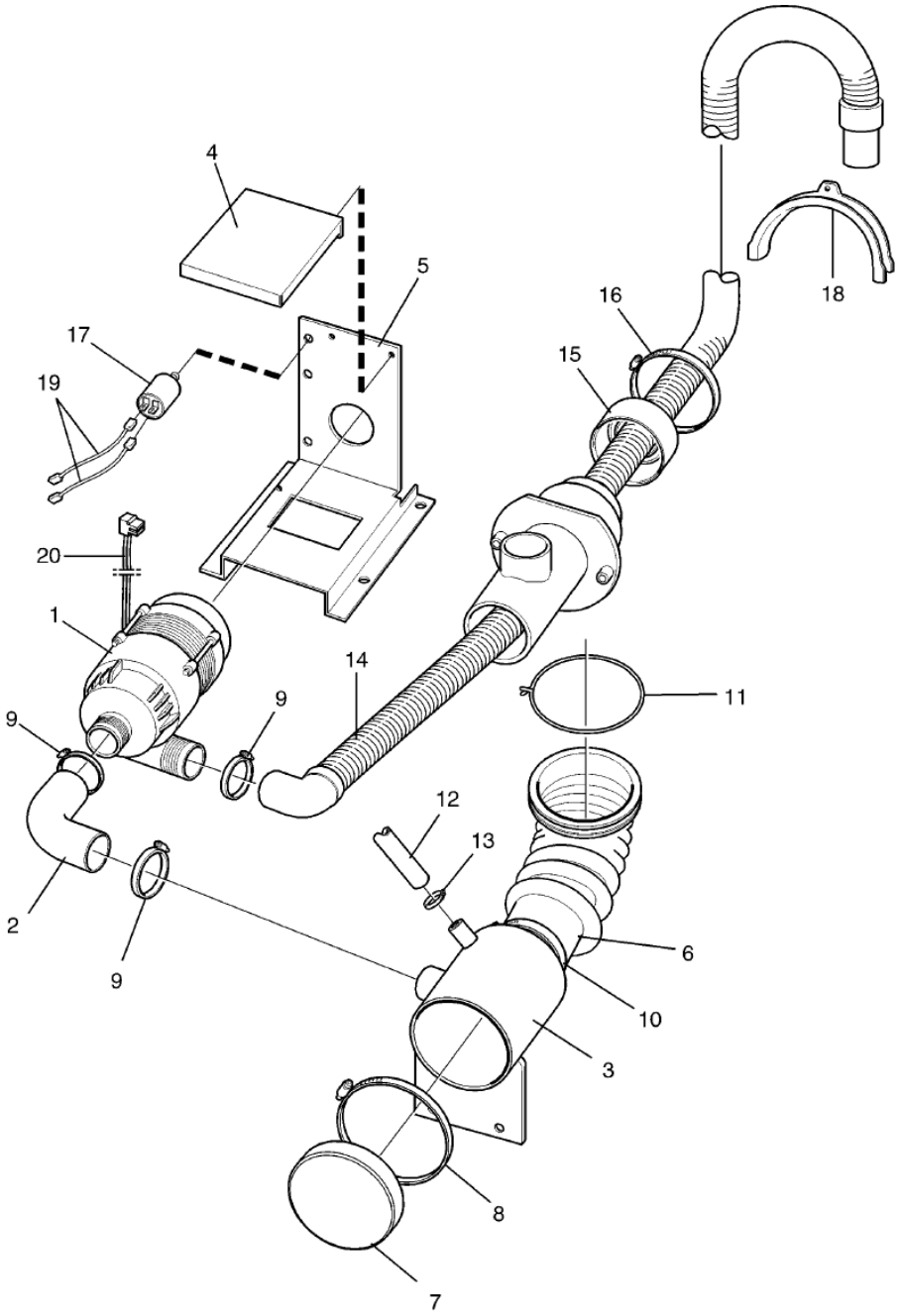

Issue	Month	Year
01	01	07

102493

W4105H Compass
Drain pump
Avloppspump

Illustration	Issue	Month	
Illustration	Utgåva	Månad	
102493/1	**4**	**9**	**2011**

Pos	Qty	Part.no	Description	Beskrivning	Notes
1	1	438827001	Drain pump	Avloppspump	230V 50Hz Complete
1	1	438827002	Drain pump	Avloppspump	230V 60Hz Complete
2	1	471439102	Hose	Slang	
3	1	432253301	Container	Behållare	
4	1	432253801	Cover	Skydd	
5	1	432253201	Mounting plate	Fästplåt	
6	1	432252402	Hose	Slang	
7	1	472676001	Hood	Huv	
8	1	736284951	Hose clamp	Slangklämma	Ø77-93
9	3	736282551	Hose clamp	Slangklämma	Ø32
10	1	736283751	Hose clamp	Slangklämma	Ø48-54
11	1	471787107	Hose clamp	Slangklämma	
12	1	471811603	Hose	Slang	L=1450
13	1	736281651	Hose clamp	Slangklämma	Ø13-19
14	1	471685882	Drain hose	Avloppsslang	
15	1	438502201	Discharge	Avlastning	
16	1	736284051	Hose clamp	Slangklämma	Ø50-63
17	1	438951501	Capacitor	Kondensator	4µF
18	1	471685883	Bracket	Hållare	
19	2	432295426	Cable set	Ledningssats	
20	1	413290304	Cable set	Ledningssats	

info@zipnasklade.ru
8(800)500-69-51

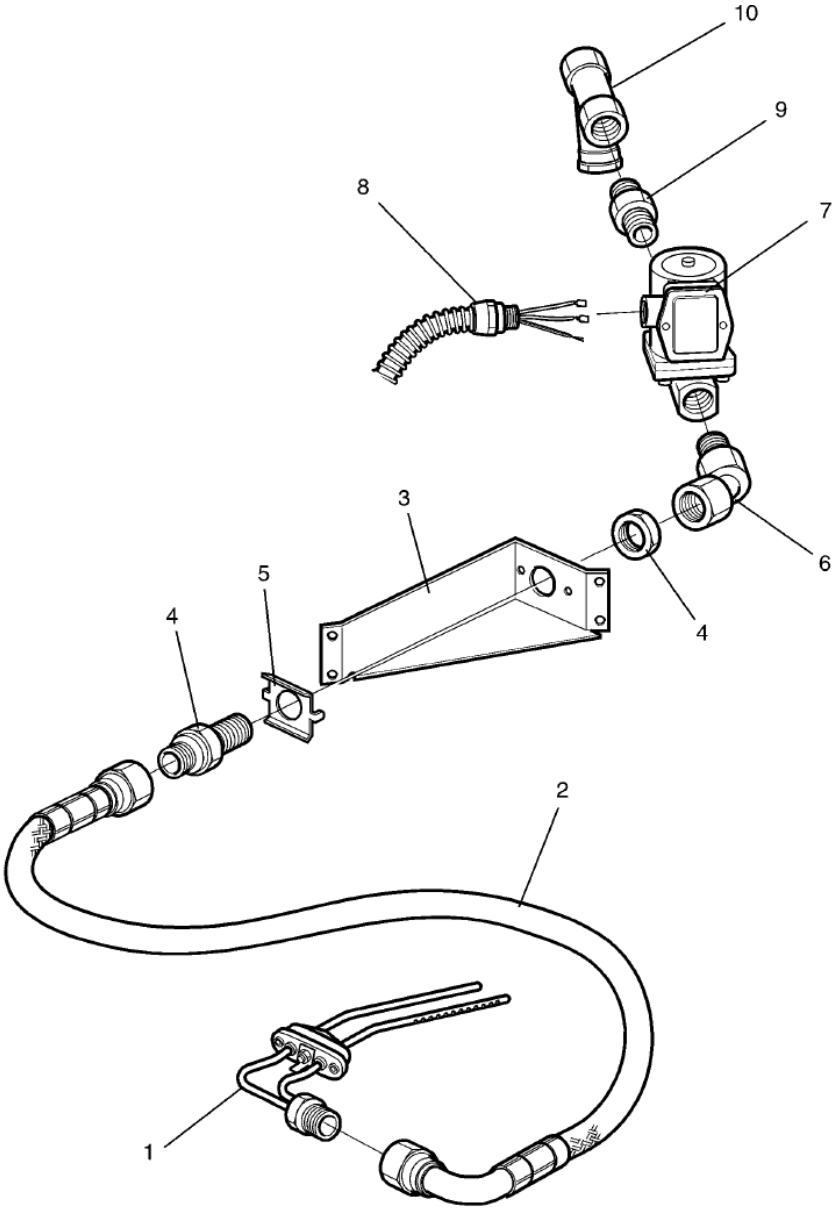

Issue	Month	Year
01	01	07

102501

W4105H Compass
Steam components
Ångdetaljer

Illustration Illustration	Issue Utgåva	Month Månad	
102501/1	**3**	**11**	**2012**

Pos	Qty	Part.no	Description	Beskrivning	Notes
1	1	432163001	Steam injector	Ånginjektor	
2	1	471812626	Steam hose	Ångslang	
3	1	432167301	Bracket	Konsol	
4	1	471869501	Nipple	Nippel	
5	1	471293701	Bracket	Vridskydd	
6	1	471869701	Adapter	Adapter	
7	1	471827903	Valve	Ventil	50/60 Hz
7	1	471827908	• *Repair kit*	• *Reparationsats*	
8	1	432305803	Cable set	Ledningssats	
9	1	471862401	Nipple	Nippel	1/2''
10	1	744311306	Filter	Filter	1/2''

info@zipnasklade.ru
8(800)500-69-51

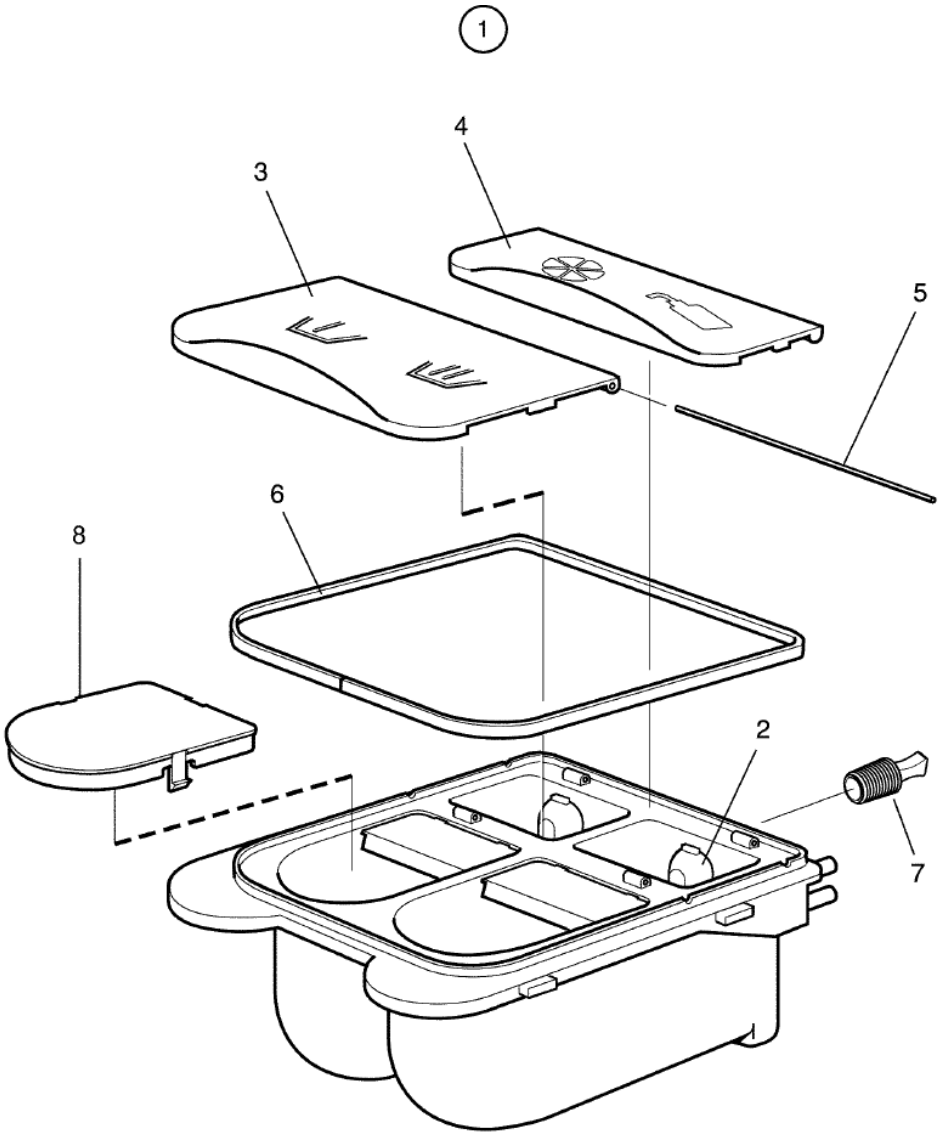

Issue	Month	Year
02	**04**	**13**

102344

W4105H Compass
Detergent container
Tvättmedelsbehållare

Illustration	Issue	Month	
Illustration	Utgåva	Månad	
102344/1	**3**	**4**	**2013**

Pos	Qty	Part.no	Description	Beskrivning	Notes
1	1	472995401	Detergent container	Tvättmedelsbehållare	USA
1	1	472995403	Detergent container	Tvättmedelsbehållare	
2	2	432240451	• *Siphon*	• *Hävert*	
3	1	432240502	• *Cover*	• *Lock*	
4	1	432240602	• *Cover*	• *Lock*	
5	2	432240701	• *Shaft*	• *Axel*	
6	1	432241201	• *Gasket*	• *Packning*	
7	1	432241301	• *Rubber plug*	• *Gummiplugg*	
8	1	432240901	Cover	Kåpa	

info@zipnasklade.ru
8(800)500-69-51

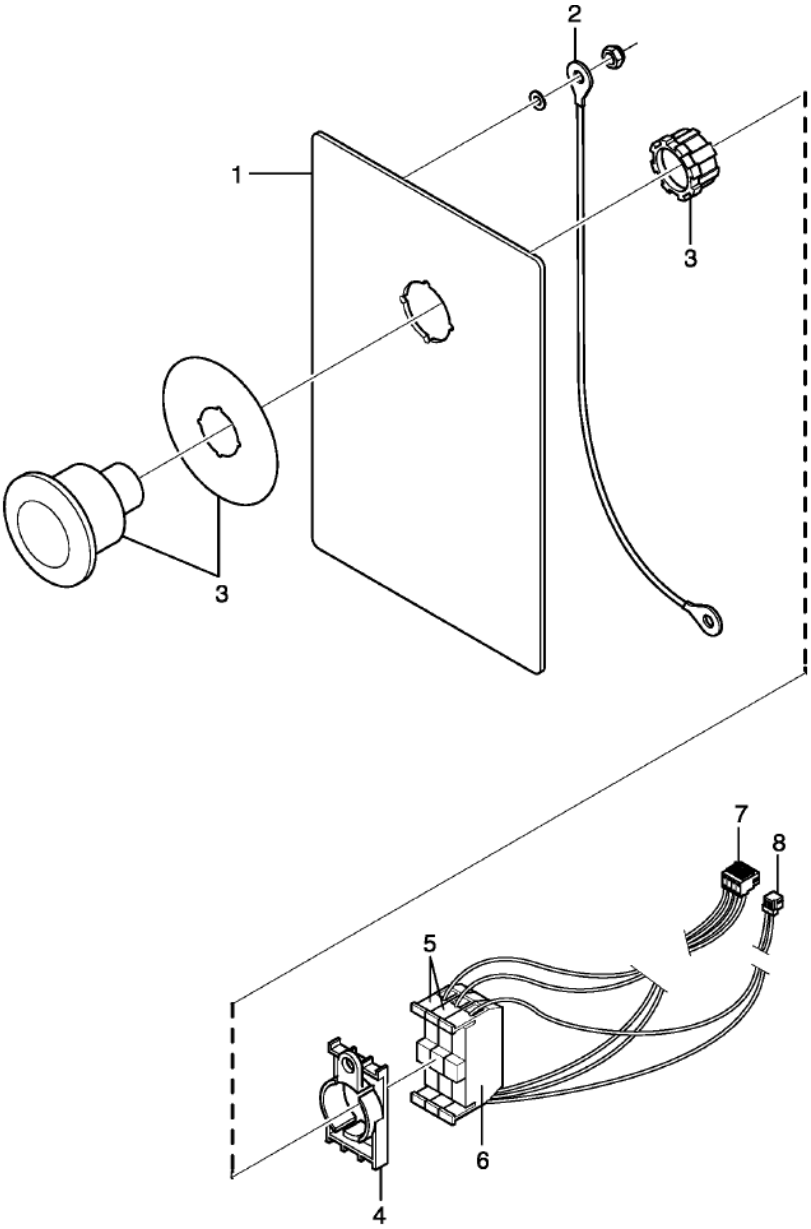

Issue	Month	Year
01	01	09

102596

W4105H Compass
Emergency stop
Nödstopp

Illustration	Issue	Month	
Illustration	Utgåva	Månad	
102596/0	**1**	**1**	**2009**

Pos	Qty	Part.no	Description	Beskrivning	Notes
1	1	432215012	Cover plate	Täckplåt	
2	1	432298220	Cable set	Ledningssats	
3	1	471962832	Push-button	Tryckknapp	
4	1	471962875	Connector for contact block	Hållare för kontaktblock	
5	2	471962870	Contact block	Kontaktblock	Red
6	1	471962871	Socket	Kontaktblock	NO Green
7	1	413318416	Cable set	Ledningssats	
8	1	413327219	Cable set	Ledningssats	2-pole

info@zipnasklade.ru
8(800)500-69-51

info@zipnasklade.ru
8(800)500-69-51

W4105H Compass
Key switch
Nyckelbrytare

Illustration Illustration	Issue Utgåva	Month Månad	
102663/0	**1**	**3**	**2009**

Pos	Qty	Part.no	Description	Beskrivning	Notes
1	1	432215012	Cover plate	Täckplåt	
2	1	432298220	Cable set	Ledningssats	
3	1	471962885	Key switch	Nyckelbrytare	With key
4	1	471962875	Connector for contact block	Hållare för kontaktblock	
5	1	471962871	Socket	Kontaktblock	NO Green
6	1	413327221	Cable set	Ledningssats	2-pole

info@zipnasklade.ru
8(800)500-69-51

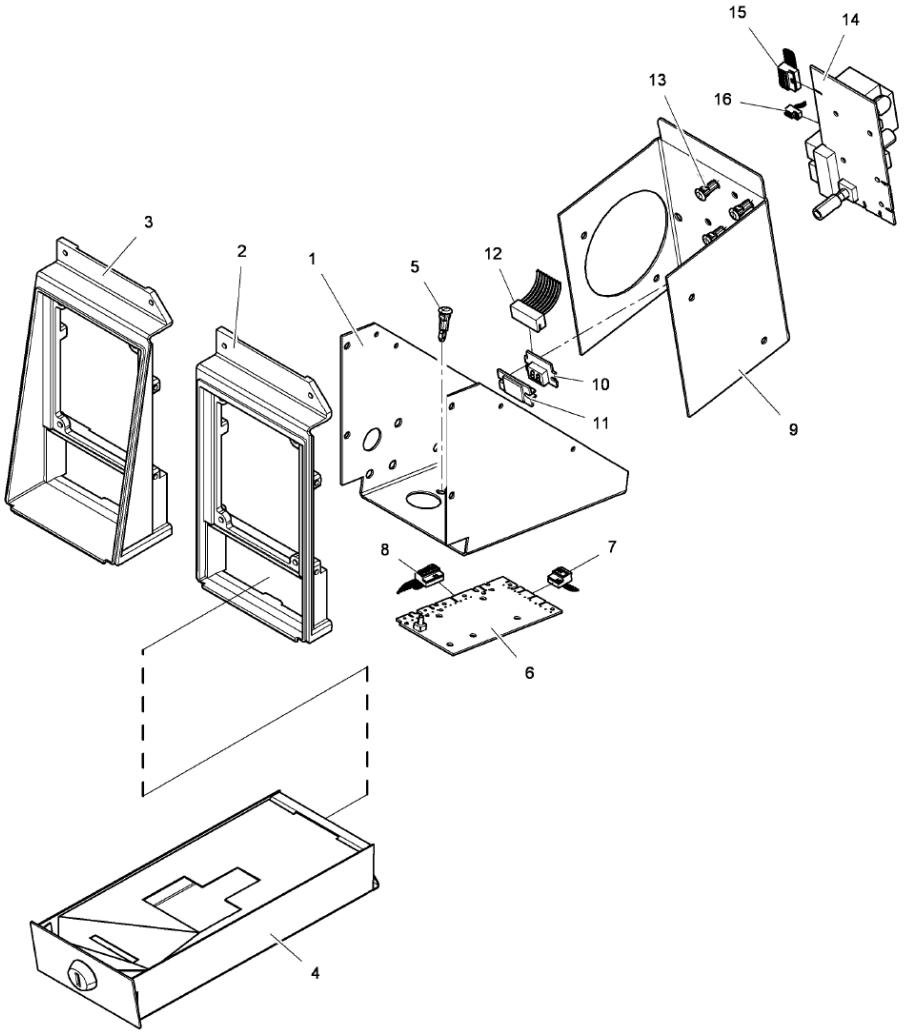

50 01 15

Issue Month Year
01 10 09

W4105H Compass
Coin box
Myntlåda

Illustration	Issue	Month	
Illustration	Utgåva	Månad	
500115/0	**2**	**9**	**2011**

Pos	Qty	Part.no	Description	Beskrivning	Notes
1	1	432218502	Bracket	Konsol	
2	1	432217412	Frame	Ram	
3	1	432217512	Frame	Ram	
4	1	432220321	Coin box	Myntlåda	Complete
4	1	432220322	Coin box	Myntlåda	Japan Complete
5	4	471795802	Spacer element	Distansstycke	
6	1	438879001	Printed circuit board	Kretskort	
6	1	438877501	Printed circuit board	Kretskort	
6	1	438877502	Printed circuit board	Kretskort	230V Blocking Electronic coin meter
6	1	438877507	Printed circuit board	Kretskort	9V Blocking Electronic coin meter
7	1	432309401	Cable set	Ledningssats	
8	1	413327601	Cable set	Ledningssats	6-pole 6-pole
9	1	432230001	Bracket	Konsol	Classic Control
10	1	438877812	Printed circuit board	Kretskort	Classic Control
11	1	438892190	Display	Display	Classic Control
12	1	413327901	Cable set	Ledningssats	Classic Control 9-POLE
13	5	471796002	Support	Stöd	Classic Control
14	1	438877801	Coin counter	Mynträknare	Classic Control 230V
14	1	438877802	Coin counter	Mynträknare	Classic Control 120V
15	1	432309615	Cable set	Ledningssats	Classic Control
16	1	432319271	Cable set	Ledningssats	Classic Control 2-pole

info@zipnasklade.ru
8(800)500-69-51

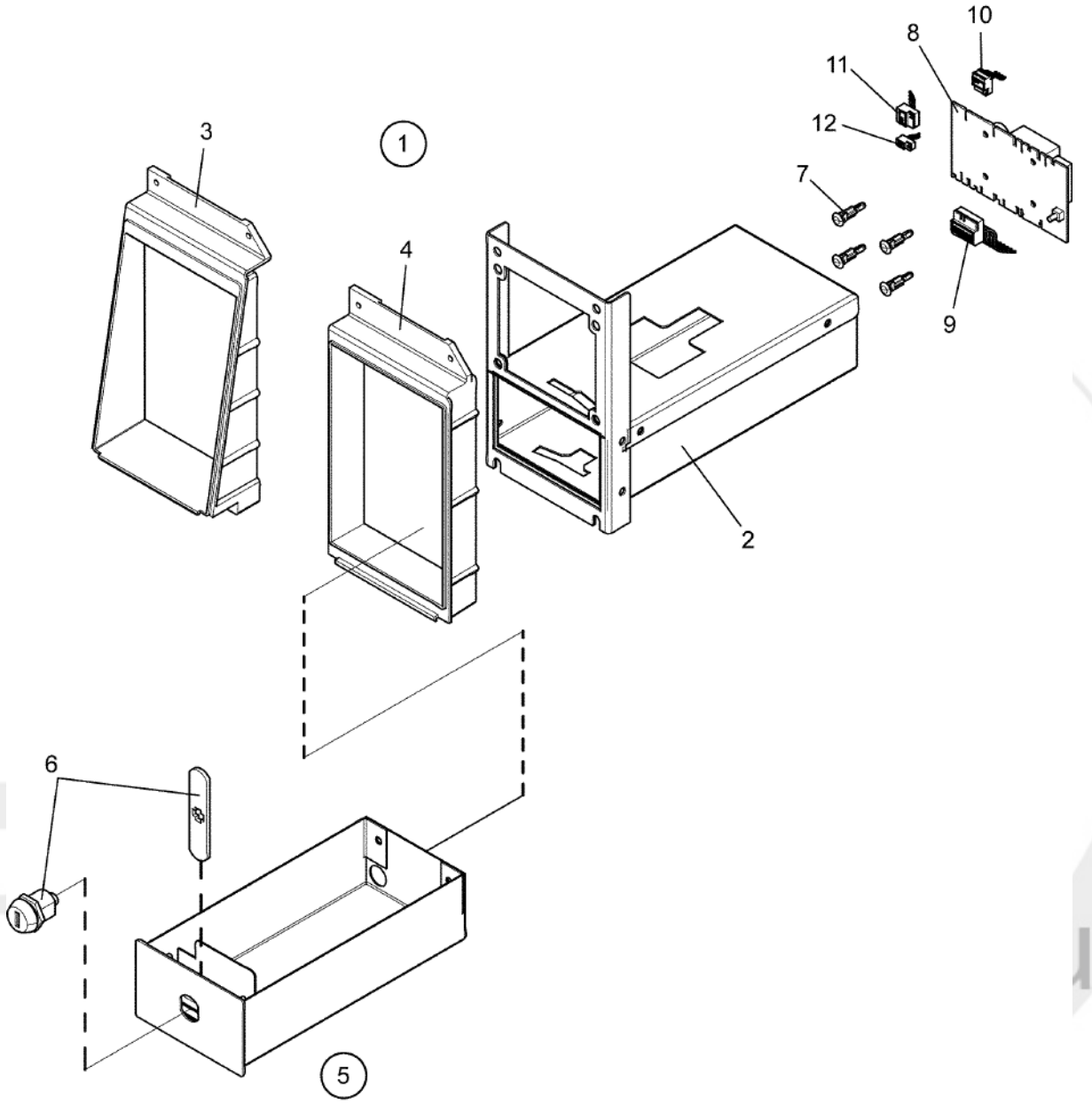

500109_02

W4105H Compass
Coin box
Myntlåda

Illustration Illustration	Issue Utgåva	Month Månad	
500109/0	**4**	**4**	**2014**

Pos	Qty	Part.no	Description	Beskrivning	Notes
1	1	432223412	Coinbox housing	Mynthus	Slanted panel Complete
1	1	432223402	Coinbox housing	Mynthus	Vertical panel Complete
2	1	432223102	• *Coinbox housing*	• *Mynthus*	
3	1	432226801	• *Frame*	• *Ram*	
4	1	432217302	• *Frame*	• *Ram*	
5	1	432223301	Coin box	Myntlåda	Complete
6	1	472991930	• *Lock*	• *Lås*	Random key
6	1	472991931	• *Lock*	• *Lås*	key 46080
6	1	472991932	• *Lock*	• *Lås*	key 46199
6	1	472991933	• *Lock*	• *Lås*	key 46819
7	4	471796002	Support	Stöd	
8	1	438877501	Printed circuit board	Kretskort	
8	1	438877507	Printed circuit board	Kretskort	9V Blocking Electronic coin meter
8	1	438879003	Printed circuit board	Kretskort	PW 9
9	1	413327601	Cable set	Ledningssats	6-pole 6-pole
9	1	432309615	Cable set	Ledningssats	PW 9
10	1	413308409	Cable set	Ledningssats	4-pole
11	1	432309401	Cable set	Ledningssats	
12	1	432309210	Cable set	Ledningssats	PW 9 2-pole

info@zipnasklade.ru
8(800)500-69-51

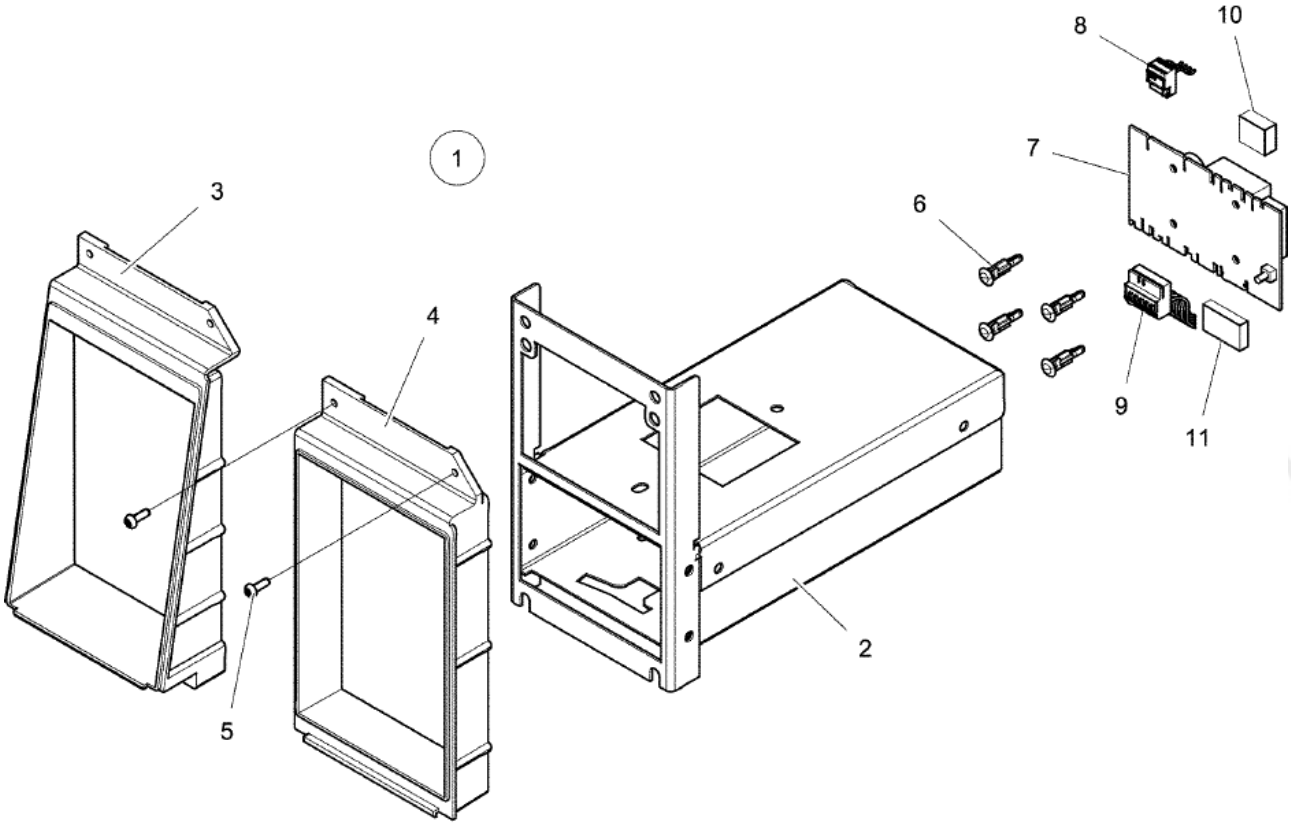

50 01 10

Issue Month Year
02 01 11

W4105H Compass
Coinbox USA
Myntlåda USA

Illustration Illustration	Issue Utgåva	Month Månad	
500110/0	**2**	**1**	**2011**

Pos	Qty	Part.no	Description	Beskrivning	Notes
1	1	432223432	Coin box	Myntlåda	Slanted panel Complete
1	1	432223422	Coin box	Myntlåda	Vertical panel Complete
2	1	432223111	• *Coin box*	• *Myntlåda*	
3	1	432226801	• *Frame*	• *Ram*	
4	1	432217302	• *Frame*	• *Ram*	
5	2	471837601	• *Screw*	• *Skruv*	M4X12
5	1	471837699	Tool	Verktyg	Tool for 471837601 Tool for 471837601
6	4	471796002	Support	Stöd	
7	1	438877501	Printed circuit board	Kretskort	
8	1	413308409	Cable set	Ledningssats	4-pole
9	1	413327601	Cable set	Ledningssats	6-pole 6-pole
10	1	438870104	Frame	Ram	2-pole
10	1	438870103	Multistik	Kantanslutning	2-pole
11	1	438870102	Frame	Ram	3-pole
11	1	438870101	Multistik	Kantanslutning	3-pole

info@zipnasklade.ru
8(800)500-69-51

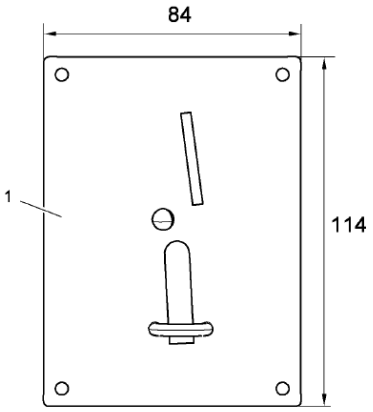

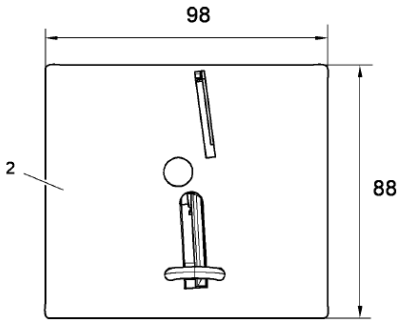

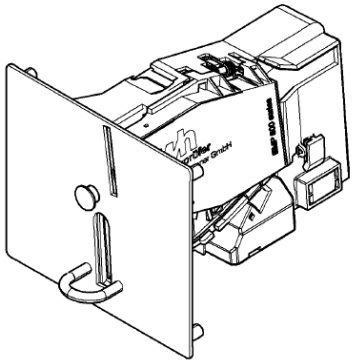

50 01 14

Issue Month Year
02 10 09

W4105H Compass
Electronic coin meter
Elektronisk myntmätare

Illustration Illustration	Issue Utgåva	Month Månad	
500114/0	**5**	**9**	**2011**

Pos	Qty	Part.no	Description	Beskrivning	Notes
1	1	438892001	Coin meter	Myntmätare	230V Blocking 2 Coins, 100+500 JPY
1	1	438892011	Coin meter	Myntmätare	9V Blocking 2 Coins, 100+500 JPY
1	1	438892002	Coin meter	Myntmätare	2 Coins, 0,5+1 NZD
2	1	438893001	Coin meter	Myntmätare	JPY+WON
2	1	438893002	Coin meter	Myntmätare	NZD+AUD
2	1	438893003	Coin meter	Myntmätare	EUR+DKK+NOK
2	1	438893004	Coin meter	Myntmätare	EUR+SEK
2	1	438893005	Coin meter	Myntmätare	HKD+TWD
2	1	438893006	Coin meter	Myntmätare	MOP+MYR+SGD
2	1	438893007	Coin meter	Myntmätare	CHF+CZK+LTL
2	1	438893008	Coin meter	Myntmätare	AED+ZAR+ILS
2	1	438893009	Coin meter	Myntmätare	GBP+EUR
2	1	438893010	Coin meter	Myntmätare	PLN+EUR
2	1	438893011	Coin meter	Myntmätare	EUR+Tokens
2	1	438893012	Coin meter	Myntmätare	CNY

info@zipnasklade.ru
8(800)500-69-51

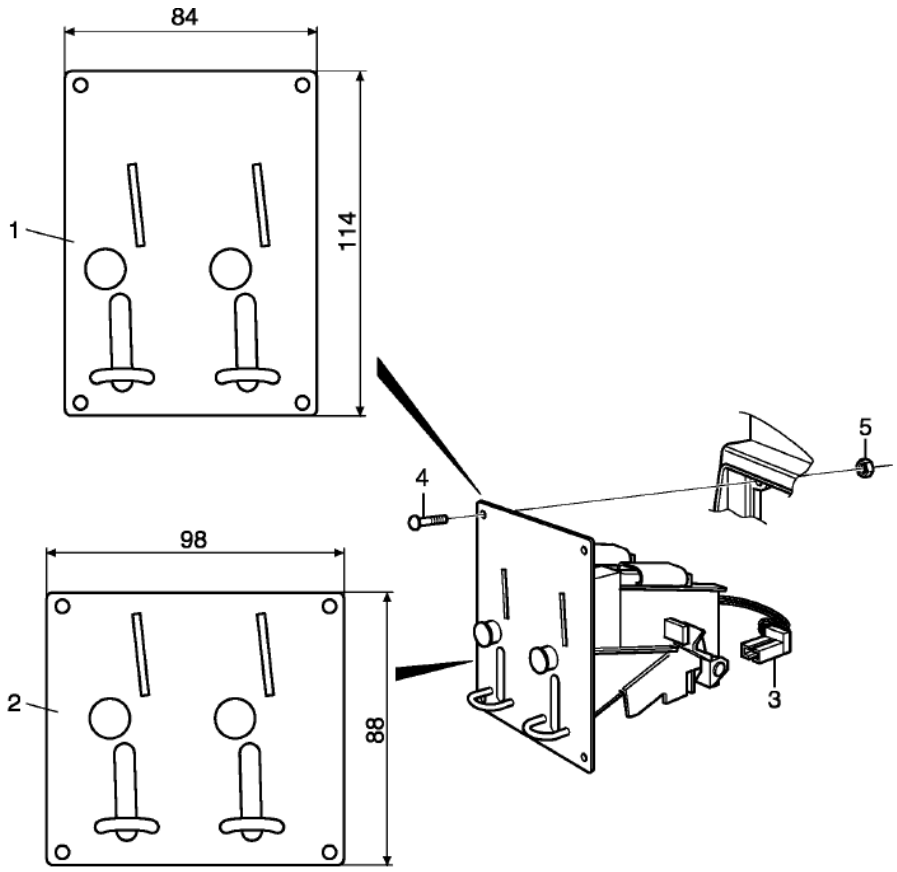

Issue	Month	Year
01	08	09

102672

W4105H Compass
Coin meter
Myntmätare

Illustration Illustration	Issue Utgåva	Month Månad	
102672/0	**7**	**11**	**2016**

Pos	Qty	Part.no	Description	Beskrivning	Notes
1	1	438892301	Coin meter	Myntmätare	A1X1-Temp. sensor
1	1	438892303	Coin meter	Myntmätare	1 Coin, 100 JPY
1	1	438892304	Coin meter	Myntmätare	2 Coins, 0,5+1 EUR
1	1	438892407	Coin meter	Myntmätare	2 Coins, 0,2 + 1 GBP
1	1	438892306	Coin meter	Myntmätare	2 Coins, 1+5 DKK
1	1	438892307	Coin meter	Myntmätare	2 Coins, 10+50 TWD
1	1	438892309	Coin meter	Myntmätare	2 Coins, 1+10 DKK
1	1	438892310	Coin meter	Myntmätare	2 Coins, 2+5 DKK
1	1	438892311	Coin meter	Myntmätare	2 Coins, 2+10 DKK
1	1	438892312	Coin meter	Myntmätare	2 Coins, 5+10 DKK
1	1	438892313	Coin meter	Myntmätare	2 Coins, 1+5 NOK
1	1	438892314	Coin meter	Myntmätare	2 Coins, 1+10 NOK
1	1	438892315	Coin meter	Myntmätare	2 Coins, 5+10 NOK
1	1	438892316	Coin meter	Myntmätare	2 Coins, 10+20 NOK
1	1	438892320	Coin meter	Myntmätare	2 Coins, 1+5 HKD
1	1	438892322	Coin meter	Myntmätare	2 Coins, 0,2+1 AUD
1	1	438892404	Coin meter	Myntmätare	2 Coins, 1+1 AUD
1	1	438892323	Coin meter	Myntmätare	2 Coins, 0,1+0,5 EUR
1	1	438892325	Coin meter	Myntmätare	2 Coins, 0,2+1 EUR
1	1	438892326	Coin meter	Myntmätare	2 Coins, 1+2 EUR
1	1	438892327	Coin meter	Myntmätare	2 Coins, 0,2+2 EUR
1	1	438892329	Coin meter	Myntmätare	TOKEN 25,8x2,3
1	1	438892331	Coin meter	Myntmätare	1 Coin, 1 AED
1	1	438892332	Coin meter	Myntmätare	1 Coin, 1 AUD
1	1	438892335	Coin meter	Myntmätare	1 Coin, 2 DKK
1	1	438892336	Coin meter	Myntmätare	1 Coin, 10 DKK
1	1	438892337	Coin meter	Myntmätare	1 Coin, 0,1 EUR
1	1	438892338	Coin meter	Myntmätare	1 Coin, 0,2 EUR
1	1	438892339	Coin meter	Myntmätare	1 Coin, 0,5 EUR
1	1	438892340	Coin meter	Myntmätare	1 Coin, 1 EUR

info@zipnasklade.ru
8(800)500-69-51

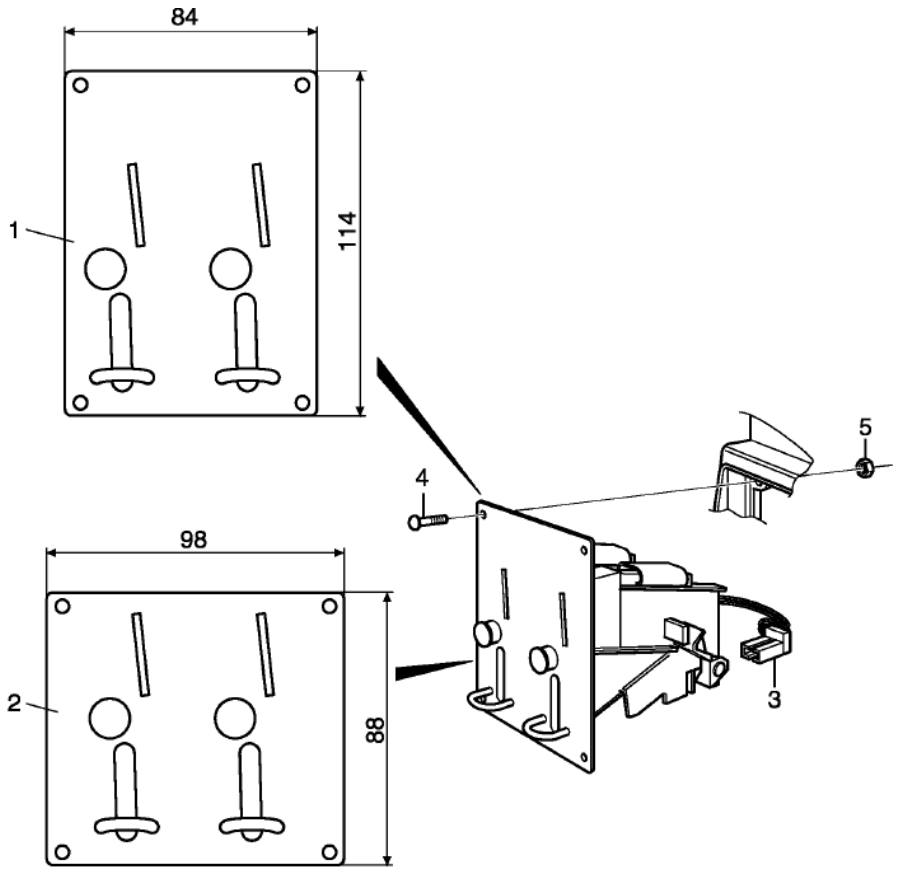

Issue	Month	Year
01	08	09

102672

W4105H Compass
Coin meter
Myntmätare

Illustration Illustration	Issue Utgåva	Month Månad	
102672/0	**7**	**11**	**2016**

Pos	Qty	Part.no	Description	Beskrivning	Notes
1	1	438892342	Coin meter	Myntmätare	1 Coin, 1 MACAUDOLLAR
1	1	438892343	Coin meter	Myntmätare	1 Coin, 5 HKD
1	1	438892345	Coin meter	Myntmätare	1 Coin, 500 WON
1	1	438892348	Coin meter	Myntmätare	1 Coin, 1 SEK
1	1	438892349	Coin meter	Myntmätare	1 Coin, 5 SEK
1	1	438892352	Coin meter	Myntmätare	1 Coin, 1 SGD
1	1	438892353	Coin meter	Myntmätare	1 Coin, 10 TWD
1	1	438892355	Coin meter	Myntmätare	1 Coin, 1 NOK
1	1	438892357	Coin meter	Myntmätare	1 Coin, 10 NOK
1	1	438892359	Coin meter	Myntmätare	TOKEN 25,7x1,6
1	1	438892360	Coin meter	Myntmätare	TOKEN 26,0x2,1
1	1	438892368	Coin meter	Myntmätare	TOKEN 26,3x1,9
1	1	438892376	Coin meter	Myntmätare	TOKEN 25,0x2,0
1	1	438892378	Coin meter	Myntmätare	TOKEN 23,5x1,7
1	1	438892379	Coin meter	Myntmätare	TOKEN 25,8x1,7
1	1	438892381	Coin meter	Myntmätare	TOKEN 27,4x1,6
1	1	438892382	Coin meter	Myntmätare	TOKEN 25,0x1,8
1	1	438892383	Coin meter	Myntmätare	TOKEN 24,3x1,5
1	1	438892385	Coin meter	Myntmätare	TOKEN 22,5x1,5
1	1	438892386	Coin meter	Myntmätare	TOKEN 27,0x1,6
1	1	438892387	Coin meter	Myntmätare	TOKEN 24,3x1,5
1	1	438892388	Coin meter	Myntmätare	TOKEN 23,7x1,6
1	1	438892389	Coin meter	Myntmätare	TOKEN 19,0x1,0
1	1	438892390	Coin meter	Myntmätare	TOKEN 19,0x1,5
1	1	438892391	Coin meter	Myntmätare	TOKEN 22,35x1,6
1	1	438892394	Coin meter	Myntmätare	TOKEN MIELE
1	1	438892395	Coin meter	Myntmätare	1 Coin, 5 DKK
1	1	438892396	Coin meter	Myntmätare	2 Coins, 1+2 AUD
1	1	438892405	Coin meter	Myntmätare	2 Coins, 2+2 AUD
1	1	438892397	Coin meter	Myntmätare	1 Coin, 2 EUR

info@zipnasklade.ru
8(800)500-69-51

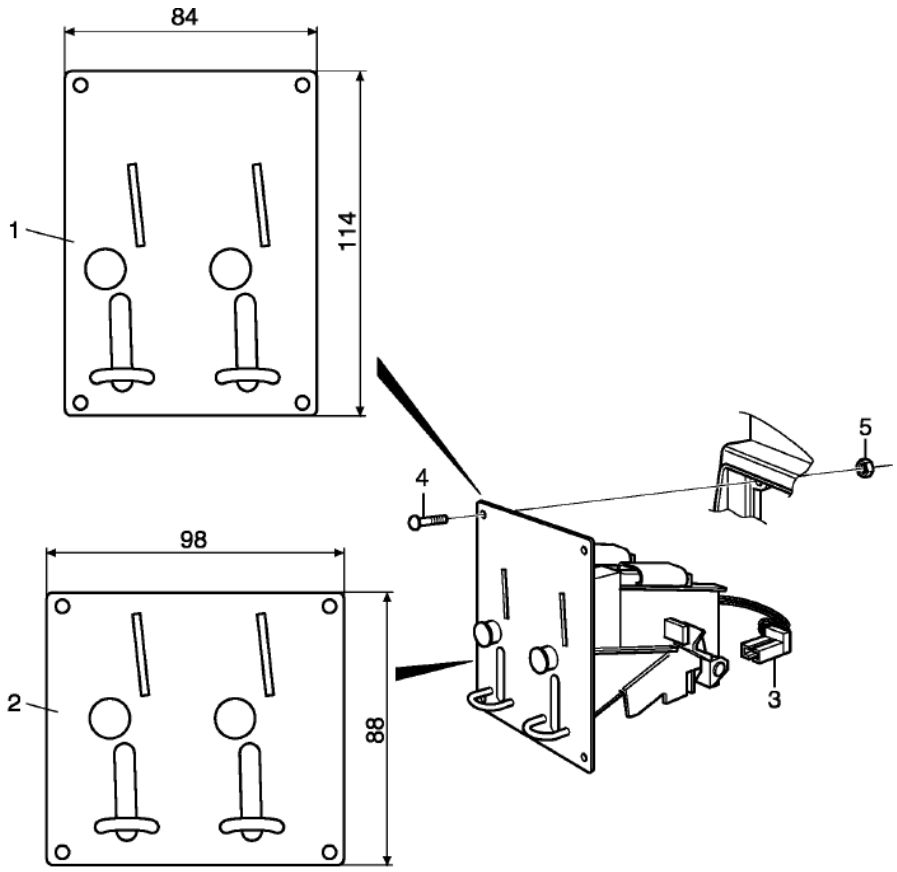

Issue	Month	Year
01	08	09

102672

W4105H Compass
Coin meter
Myntmätare

Illustration Illustration	Issue Utgåva	Month Månad	
102672/0	**7**	**11**	**2016**

Pos	Qty	Part.no	Description	Beskrivning	Notes
1	1	438892398	Coin meter	Myntmätare	TOKEN 32,0x2,0
1	1	438892401	Coin meter	Myntmätare	2 Coins, 1+5 LTL
1	1	438892403	Coin meter	Myntmätare	2 Coins, 1+2 CHF
2	1	438893159	Coin meter	Myntmätare	TOKEN 25,7x1,6
2	1	438893160	Coin meter	Myntmätare	TOKEN 26,0x2,1
2	1	438893175	Coin meter	Myntmätare	TOKEN 22,0x1,6
2	1	438893176	Coin meter	Myntmätare	TOKEN 25,0x2,0
2	1	438893178	Coin meter	Myntmätare	TOKEN 23,5x1,7
2	1	438893179	Coin meter	Myntmätare	TOKEN 25,8x1,7
2	1	438893181	Coin meter	Myntmätare	TOKEN 27,4x1,6
2	1	438893182	Coin meter	Myntmätare	TOKEN 25,0x1,8
2	1	438893185	Coin meter	Myntmätare	TOKEN 22,5x1,5
2	1	438893186	Coin meter	Myntmätare	TOKEN 27,0x1,6
2	1	438893187	Coin meter	Myntmätare	TOKEN 24,3x1,5
2	1	438893188	Coin meter	Myntmätare	TOKEN 23,7x1,6
2	1	438893189	Coin meter	Myntmätare	TOKEN 19,0x1,0
2	1	438893190	Coin meter	Myntmätare	TOKEN 19,0x1,5
2	1	438893191	Coin meter	Myntmätare	TOKEN 22,35x1,6
3	Rq	438892499	• *Sensor*	• *Sensor*	
4	4	471891090	Screw	Skruv	
5	4	731231201	Nut	Mutter	M4

info@zipnasklade.ru
8(800)500-69-51

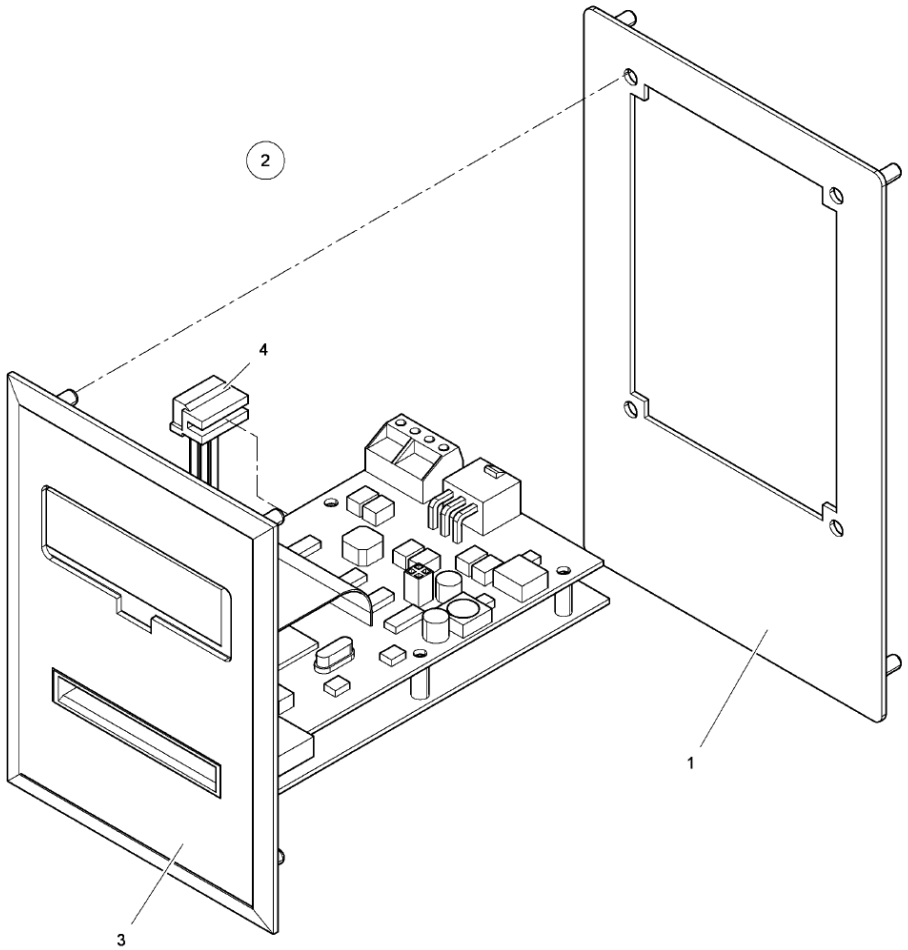

50 01 13

Issue Month Year
01 08 09

Pos	Qty	Part.no	Description	Beskrivning	Notes
1	1	432215013	Cover plate	Täckplåt	
3	1	488803817	• *Sign*	• *Skylt*	
4	1	413327451	Cable set	Ledningssats	

info@zipnasklade.ru
8(800)500-69-51

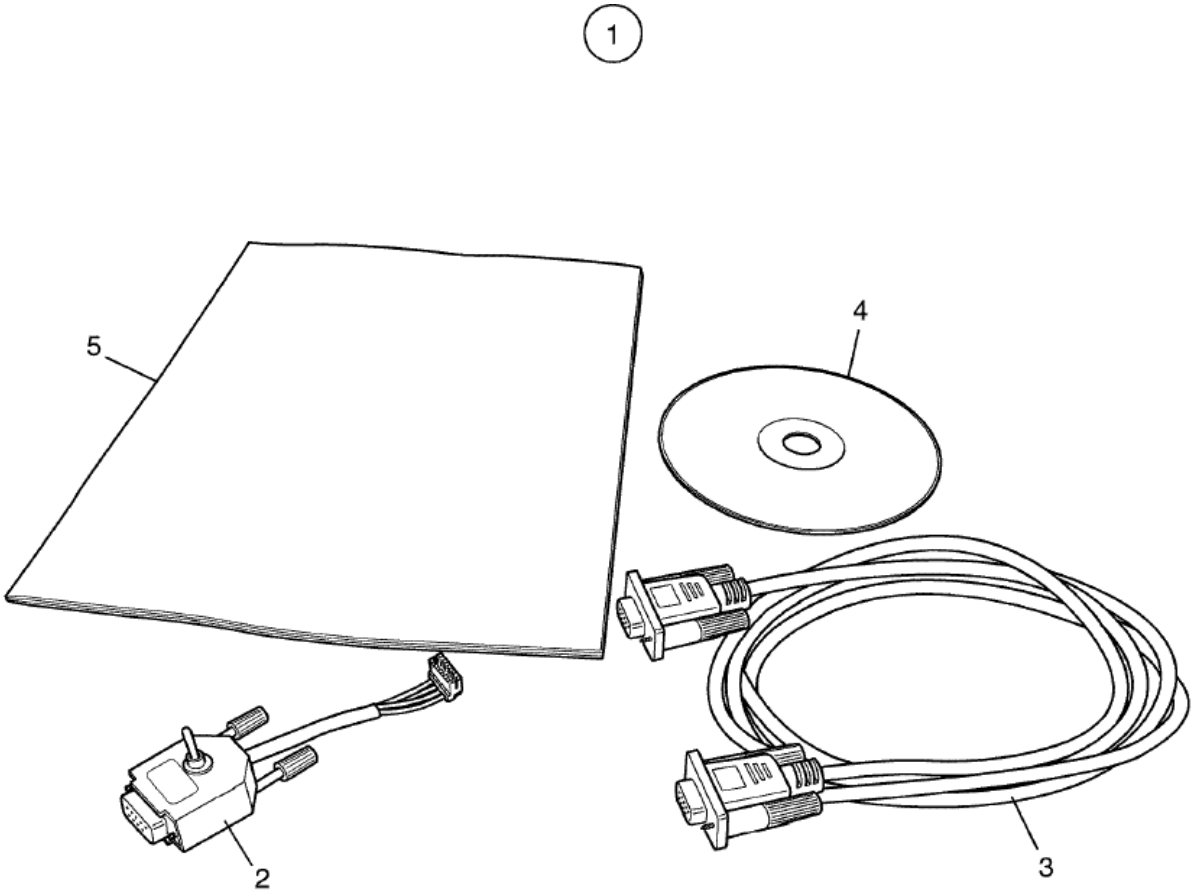

Issue	Month	Year
01	**12**	**06**

102486

W4105H Compass
Compass control loader
Compass control loader

Illustration	Issue	Month	
Illustration	Utgåva	Månad	
102486/1	**1**	**12**	**2006**

Pos	Qty	Part.no	Description	Beskrivning	Notes
1	1	*	Compass control loader	Compass control loader	Complete
2	1	413293401	• *Cable*	• *Kabel*	
3	1	438879301	• *Cable*	• *Kabel*	Complete
4	1	438921060	• *CD-ROM*	• *CD-ROM*	
5	1	438921290	• *User instructions*	• *Bruksanvisning*	Swedish
5	1	438921291	• *User instructions*	• *Bruksanvisning*	English

info@zipnasklade.ru
8(800)500-69-51

Part.no/Part.no	Page/Sida	Part.no/Part.no	Page/Sida	Part.no/Part.no	Page/Sida	Part.no/Part.no	Page/Sida
	11	432122901	21	432219903	31	432264723	25
	15	432125601	7	432219905	31	432264724	25
	17	432125801	7	432220011	11	432264726	25
	17	432126101	7	432220013	11	432264726	25
	41	432126202	7	432220018	11	432264727	25
	41	432126401	7	432220020	11	432264729	25
413220021	11	432126501	7	432220321	65	432264730	25
413220123	11	432145301	7	432220322	65	432264731	25
413220124	11	432145401	21	432221401	31	432290509	19
413260301	25	432145501	21	432221501	11	432290509	27
413261107	25	432145801	7	432223102	67	432295002	9
413261151	25	432145901	7	432223111	69	432295310	9
413290204	53	432147301	21	432223301	67	432295403	33
413290304	55	432150101	15	432223402	67	432295413	33
413290502	33	432150105	15	432223412	67	432295426	55
413291501	13	432152501	15	432223422	69	432296101	23
413291801	23	432154101	15	432223432	69	432298210	53
413291802	23	432154601	15	432224603	11	432298220	61
413291802	35	432155101	15	432225601	33	432298220	63
413291809	23	432156101	15	432225701	33	432298301	21
413293401	81	432156601	15	432225801	31	432298303	33
413294601	33	432157101	15	432225901	11	432298401	31
413308205	33	432157102	15	432226102	25	432298501	9
413308229	49	432157103	15	432226801	67	432299001	21
413308230	49	432160601	15	432226801	69	432299801	9
413308235	33	432160602	15	432227001	17	432305803	57
413308402	35	432160606	15	432227301	11	432309210	67
413308409	67	432163001	57	432227401	9	432309286	33
413308409	69	432165301	9	432228165	11	432309401	65
413308416	27	432165401	9	432228166	11	432309401	67
413308421	23	432165601	15	432230001	65	432309615	65
413308425	33	432167301	57	432230101	41	432309615	67
413308607	45	432182602	17	432230501	41	432310601	33
413308608	45	432184102	17	432240451	59	432318241	37
413308608	47	432184104	17	432240502	59	432319271	65
413308807	43	432185601	17	432240602	59	432360401	35
413308807	47	432187101	17	432240701	59	432360402	35
413308807	49	432188602	17	432240901	59	432631801	13
413318202	31	432188611	17	432241201	59	432632001	33
413318416	61	432195002	17	432241301	59	432632301	33
413327209	9	432195101	17	432250101	51	432632401	27
413327210	21	432195201	17	432250201	37	432632501	27
413327219	61	432195401	17	432250201	51	432632601	27
413327221	63	432196101	17	432250501	51	432632701	27
413327401	33	432205803	11	432250601	37	432634002	27
413327403	33	432205810	11	432250701	37	432634101	27
413327413	27	432206201	11	432250801	37	432634201	27
413327418	27	432206301	11	432251001	37	432634301	27
413327420	27	432212201	11	432251501	37	432634402	27
413327451	79	432213003	11	432251701	53	432634501	27
413327502	27	432215011	25	432252002	37	432680506	33
413327601	65	432215012	61	432252402	53	432690204	27
413327601	67	432215012	63	432252402	55	432690206	27
413327601	69	432215013	79	432253002	53	432690302	33
413327901	65	432215401	31	432253201	55	432693302	33
413328001	27	432216412	11	432253301	55	432713063	33
413370410	9	432217302	67	432253401	53	432870101	27
413411201	17	432217302	69	432253601	53	432870203	27
413500401	37	432217412	65	432253801	55	438005101	51
413500801	11	432217512	65	432254801	53	438005201	51
432064101	21	432218001	11	432262002	17	438005301	51
432121002	21	432218502	65	432262012	17	438005401	51
432122001	35	432219901	31	432264721	25	438005501	51

info@ipnaklade.u
8(800)500 69 5

Part.no/Part.no	Page/Sida	Part.no/Part.no	Page/Sida	Part.no/Part.no	Page/Sida	Part.no/Part.no	Page/Sida
438005603	41	438892315	73	438893011	71	471781801	51
438005604	41	438892316	73	438893012	71	471782610	11
438014401	17	438892320	73	438893159	77	471784201	7
438244002	29	438892322	73	438893160	77	471784801	27
438406201	17	438892323	73	438893175	77	471785912	31
438406301	17	438892325	73	438893176	77	471785916	31
438502201	55	438892326	73	438893178	77	471786401	13
438504001	39	438892327	73	438893179	77	471787104	51
438510902	11	438892329	73	438893181	77	471787107	37
438517601	9	438892331	73	438893182	77	471787107	53
438750701	13	438892332	73	438893185	77	471787107	55
438750801	13	438892335	73	438893186	77	471787108	41
438750902	9	438892336	73	438893187	77	471788701	37
438751001	9	438892337	73	438893188	77	471795802	65
438795001	33	438892338	73	438893189	77	471796002	33
438795002	33	438892339	73	438893190	77	471796002	65
438810206	37	438892340	73	438893191	77	471796002	67
438812001	37	438892342	75	438921060	81	471796002	69
438815502	15	438892343	75	438921290	81	471797703	33
438815801	21	438892345	75	438921291	81	471797704	33
438816001	7	438892348	75	438951501	55	471797704	41
438816301	27	438892349	75	438956101	19	471811603	55
438816501	27	438892352	75	438956501	9	471812402	37
438827001	55	438892353	75	438956601	9	471812626	57
438827002	55	438892355	75	438956901	9	471812866	37
438870101	33	438892357	75	438963622	31	471813901	37
438870101	69	438892359	75	438963623	31	471813911	37
438870102	69	438892360	75	438963624	31	471814709	15
438870103	33	438892368	75	438965901	27	471814751	15
438870103	69	438892376	75	438967801	31	471817501	41
438870104	69	438892378	75	438967802	31	471819501	51
438872001	31	438892379	75	438967803	31	471819601	11
438872002	31	438892381	75	438967804	31	471819901	41
438872003	31	438892382	75	438967811	31	471823452	49
438877402	23	438892383	75	438967812	31	471823464	49
438877501	65	438892385	75	438967813	31	471823676	45
438877501	67	438892386	75	438967814	31	471823676	47
438877501	69	438892387	75	438970231	21	471823678	45
438877502	65	438892388	75	438979901	23	471823678	47
438877507	65	438892389	75	438979902	21	471824063	43
438877507	67	438892390	75	438979903	21	471824063	49
438877801	65	438892391	75	438979912	23	471824064	47
438877802	65	438892394	75	471226569	13	471824068	47
438877812	65	438892395	75	471226569	29	471824069	49
438879001	65	438892396	75	471226569	37	471824307	37
438879003	67	438892397	75	471240989	41	471824308	37
438879301	81	438892398	77	471243610	13	471824309	37
438879702	33	438892401	77	471244241	29	471824310	37
438892001	71	438892403	77	471244242	37	471827903	57
438892002	71	438892404	73	471246418	37	471827908	57
438892011	71	438892405	75	471293701	57	471832203	21
438892190	65	438892407	73	471439102	55	471832301	15
438892301	73	438892499	77	471467267	11	471832802	15
438892303	73	438893001	71	471467393	35	471832805	7
438892304	73	438893002	71	471467395	27	471832806	7
438892306	73	438893003	71	471467397	27	471832807	7
438892307	73	438893004	71	471483501	39	471834213	21
438892309	73	438893005	71	471685882	55	471834223	21
438892310	73	438893006	71	471685883	55	471834247	19
438892311	73	438893007	71	471756521	11	471834435	13
438892312	73	438893008	71	471771107	21	471834436	17
438892313	73	438893009	71	471778810	25	471834602	27
438892314	73	438893010	71	471780702	7	471834609	27

info@ipnaklade.u
8(800)500 69 5

Part.no/Part.no	Page/Sida	Part.no/Part.no	Page/Sida	Part.no/Part.no	Page/Sida	Part.no/Part.no	Page/Sida
471835605	21	472990099	11				
471837601	69	472990497	27				
471837699	69	472990498	9				
471840402	17	472991304	7				
471840403	51	472991308	7				
471841201	7	472991313	15				
471841301	7	472991930	67				
471845802	11	472991931	67				
471845802	17	472991932	67				
471850210	21	472991933	67				
471850214	15	472992001	17				
471850234	7	472992002	17				
471850234	9	472992901	23				
471852801	17	472992904	23				
471855503	7	472992931	23				
471862401	57	472992932	23				
471864102	13	472993801	23				
471864402	41	472995401	59				
471868813	41	472995403	59				
471868813	51	487170245	31				
471869321	41	488803817	79				
471869501	57	725236661	17				
471869701	57	725246151	7				
471875011	33	725246451	7				
471875016	35	725246571	7				
471876701	31	731231201	77				
471876702	31	732211801	7				
471876802	23	732211801	7				
471878301	31	732211801	15				
471878303	31	732211801	21				
471878304	31	732212201	21				
471882601	21	735215301	13				
471882701	21	735313900	15				
471886101	29	735950101	15				
471886104	13	736281651	41				
471886301	29	736281651	55				
471891090	77	736282551	37				
471921965	53	736282551	55				
471922259	15	736283151	37				
471962832	61	736283151	37				
471962870	61	736283751	37				
471962871	61	736283751	37				
471962871	63	736283751	41				
471962875	61	736283751	53				
471962875	63	736283751	55				
471962885	63	736284051	37				
471967894	35	736284051	55				
471982111	7	736284651	41				
471982112	7	736284951	55				
471982113	7	738220718	15				
471982114	9	738220915	15				
471982115	7	740420600	41				
471982199	9	741510925	41				
471982811	9	744311306	57				
471983213	9	762118210	33				
471983215	9	877521108	41				
471983511	9	988802252	81				
472579201	25						
472579202	25						
472579210	25						
472579301	25						
472676001	55						
472976801	15						

info@ipnasklade.ru
8(800)500-69-51

info@zipnasklade.ru
8(800)500-69-51

info@zipnasklade.ru
8(800)500-69-51

ELECTROLUX LAUNDRY SYSTEMS SWEDEN AB
341 80 Ljungby, Sweden. Telephone +46 372 661 00. Telefax +46 372 133 90
Internet: www.electrolux-wascator.com E-mail: els.info@electrolux.se