Parts Manual

Models: GMP 100.25, GMP 120.25, GMP 1400ES
Heating: Electric
Supply: 230V 1N - 230V 3 - 400-440V 3N 50-60Hz

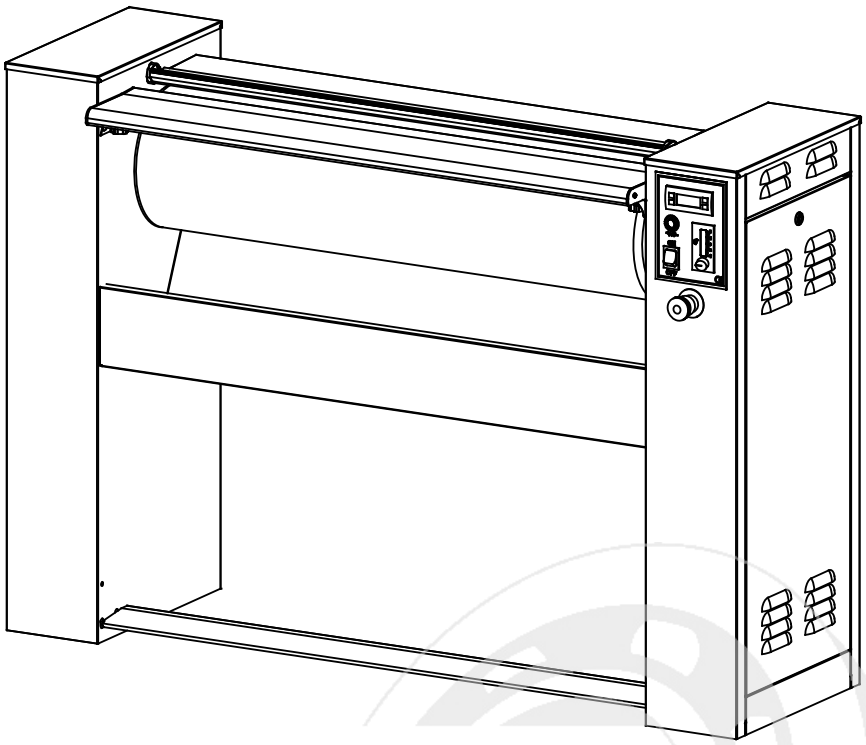

info@zipnasklade.ru
8(800)500-69-51

v4.0.0
March 2018

© Published by permission of the copyright owner - DO NOT COPY or TRANSMIT

info@zipnasklade.ru
8(800)500-69-51

© Published by permission of the copyright owner - DO NOT COPY or TRANSMIT

Index

Structural Components..... 4

Ironing Roller..... 6

Chest and Temperature Detection 1/2..... 8

Chest and Temperature Detection 2/2..... 10

Central Panels and Introduction System..... 12

Right Side: Generic Components..... 14

Right Side: Drive Components 1/2..... 16

Right Side: Drive Components 2/2..... 18

Electric Components: Ironing Speed, Push-Buttons Control 1/2..... 20

Electric Components: Ironing Speed, Push-Buttons Control 2/2..... 22

Electric Components: Variable Ironing Speed, Push-Buttons Control 1/2..... 24

Electric Components: Variable Ironing Speed, Push-Buttons Control 2/3..... 26

Electric Components: Variable Ironing Speed, Push-Buttons Control 3/3..... 28

Electric Components: 1 Ironing Speed, Microprocessor Control 1/2..... 30

Electric Components: 1 Ironing Speed, Microprocessor Control 2/2..... 32

Electric Components: Variable Ironing Speed, Microprocessor Control 1/2..... 34

Electric Components: Variable Ironing Speed, Microprocessor Control 2/2..... 36

Right Side Door..... 38

Left Side: Generic Components..... 40

Left Side: Drive Components..... 42

Left Side: Exhaust System (Optional) 1/2..... 44

Left Side: Exhaust System (Optional) 2/2..... 46

Left Side Door..... 48

Detaching Linen System (Optional)..... 50

info@zipnasklade.ru
8(800)500-69-51

© Published by permission of the copyright owner - DO NOT COPY or TRANSMIT

Structural Components

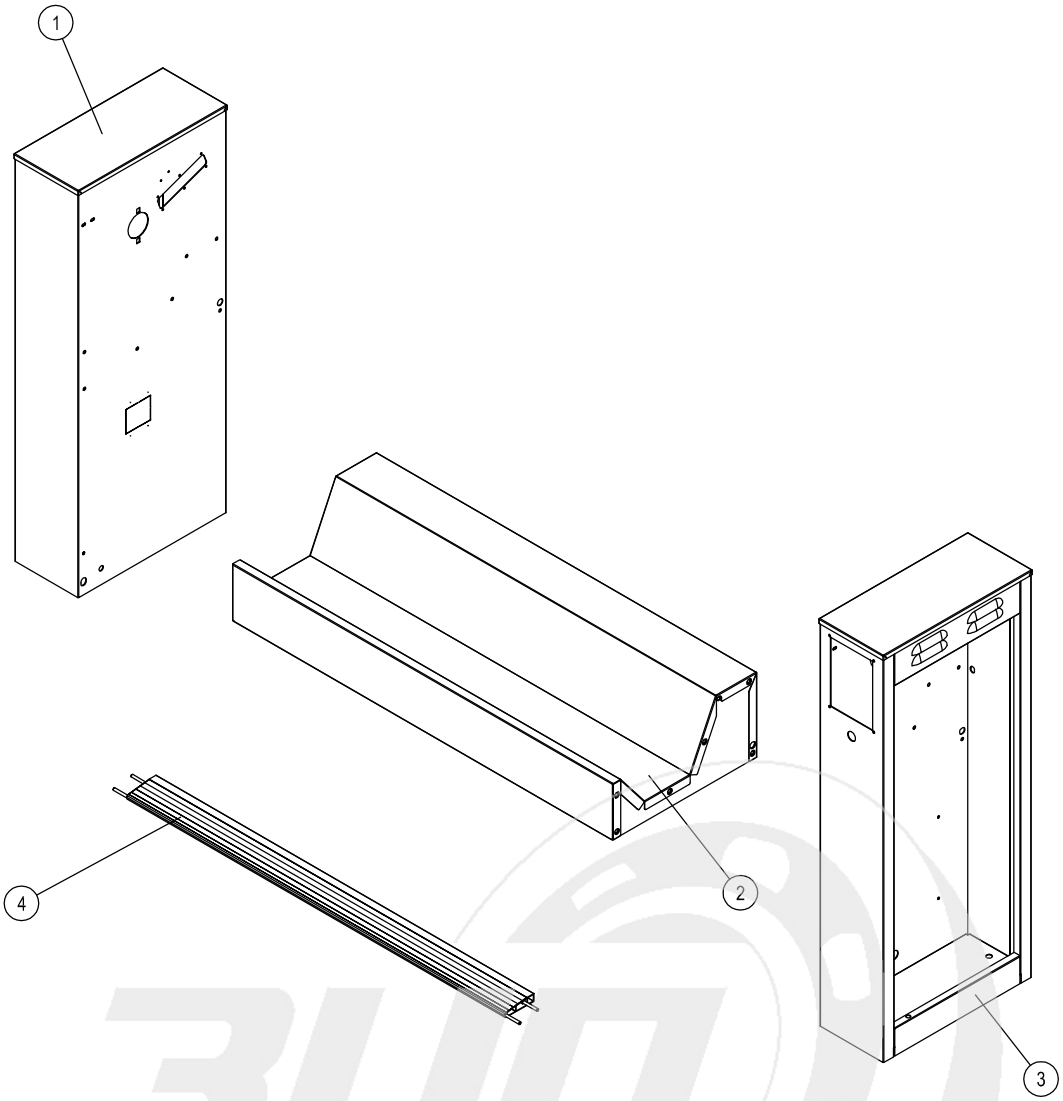

info@zipnasklade.ru
8(800)500-69-51

© Published by permission of the copyright owner - DO NOT COPY or TRANSMIT

Structural Components

REF	DESCRIPTION	GMP 100.25	GMP 120.25	GMP 1400ES	Nr
1	Fianco sinistro, grigio Left side plate, grey Côté gauche, gris Linke Seitenwand, grau Costado izquierdo, gris	017002 7035			1
2	Scivolo biancheria Slide for linen Glissière pour linge Wäscherutsche Plano inclinado para ropa	590V70054-01	590V70054-02	590V70054-03	1
3	Fianco destro, grigio Right side plate, grey Côté droite, gris Rechte Seitenwand, grau Costado derecho, gris	017001 7035			1
4	Pedaliera Pedal Pédalier Pedal Pedal	690000044-03	690000044-04	690000044-05	1

info@zipnasklade.ru
8(800)500-69-51

© Published by permission of the copyright owner - DO NOT COPY or TRANSMIT

Ironing Roller

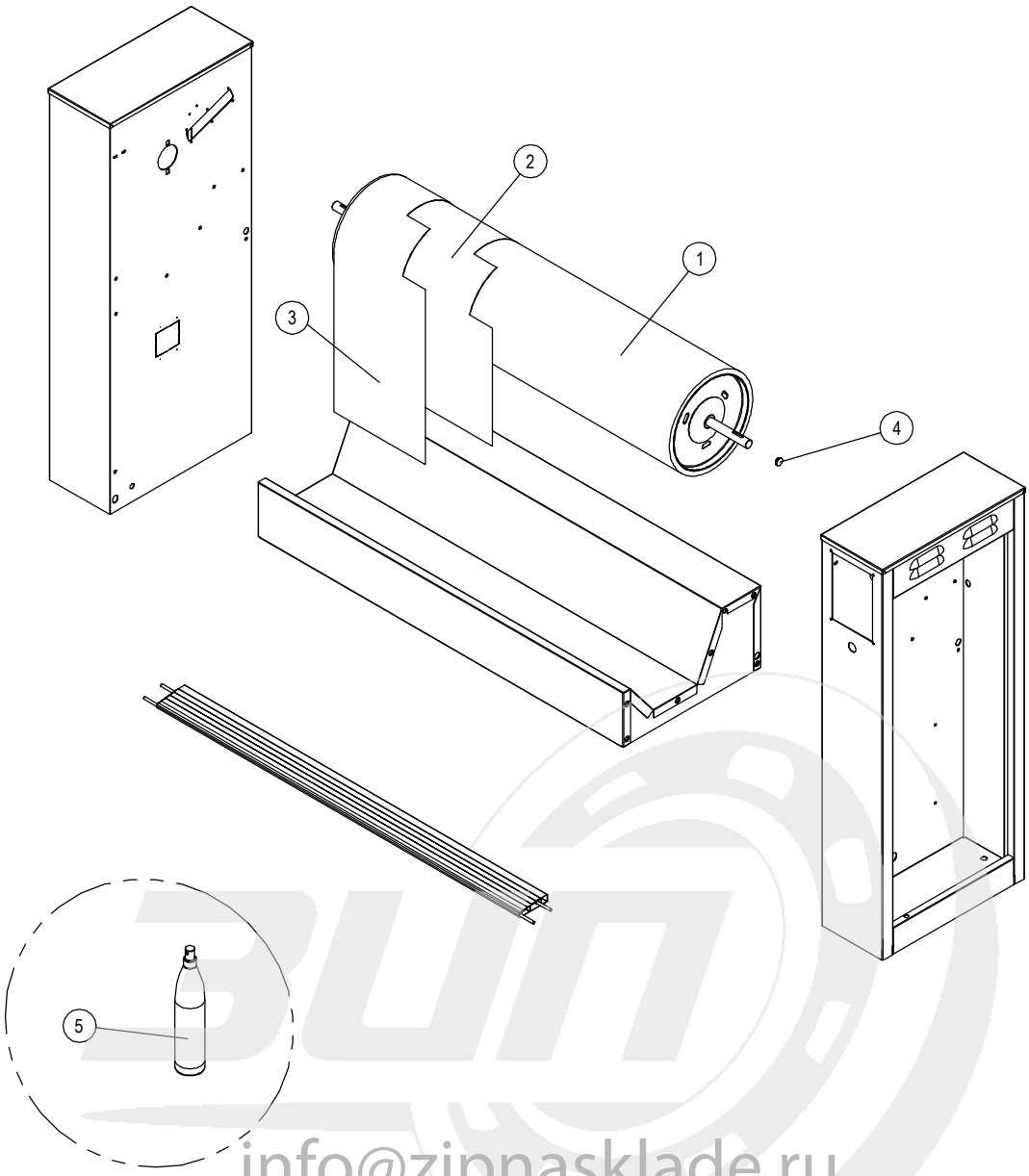

info@zipnasklade.ru
8(800)500-69-51

© Published by permission of the copyright owner - DO NOT COPY or TRANSMIT

Ironing Roller

REF	DESCRIPTION	GMP 100.25	GMP 120.25	GMP 1400ES	Nr
1	Rullo rivestito in lana d'acciaio Roller padded with steelwool Rouleau revetû en laine d'acier Walze mit Stahlwolle-Bewicklung Rodillo revestido en lana de acero	015018R "A" models: 015019R	016010R "A" models: 016011R	026010R "A" models: 033003R	1
	Lana d'acciaio Steelwool Laine d'acier Stahlwolle Lana de acero	LACC-R			5 kg
	Rullo rivestito TENAX Roller padded with TENAX Rouleau revetû en TENAX Walze mit TENAX-Bewicklung Rodillo revestido en TENAX	015020R	040.3R2.00037	026014R "A" models: 033016R	1
2	Mollettone **(solo per modelli con rullo rivestito in lana d'acciaio)** Thick flannel **(only for models with roller padded with steelwool)** Molletton **(seulement pour modèles avec rouleau revêtu en laine d'acier)** Molton **(nur für Stahlwolle-bewickelte Modelle)** Muletón **(sólo para modelos con rodillo revestido en lana de acero)**	M100/25	M120/25	M1400ES	1
3	Telo rullo cotone **(solo per modelli con rullo rivestito in lana d'acciaio)** Cotton ironing cloth **(only for models with roller padded with steelwool)** Toile rouleau de coton **(seulement pour modèles avec rouleau revêtu en laine d'acier)** Baumwoll-Rollenstoffbezung **(nur für Stahlwolle-bewickelte Modelle)** Lona Rodillo **(sólo para modelos con rodillo revestido en lana de acero)**	T100/25	T120/25	T1400ES	1
	Telo rullo Nomex **(solo per modelli con rullo rivestito in lana d'acciaio)** Nomex roller cover **(only for models with roller padded with steelwool)** Toile rouleau en Nomex **(seulement pour modèles avec rouleau revêtu en laine d'acier)** Nomex-Rollenstoffbezug **(nur für Stahlwolle-bewickelte Modelle)** Paño rodillo Nomex **(sólo para modelos con rodillo revestido en lana de acero)**	TN100/25	TN120/25	TN1400ES	1
	Mollettone Nomex 400 g/m² **(solo per modelli con rullo rivestito con TENAX)** Nomex felt 400 g/m² **(only for models with roller padded with TENAX)** Molletton Nomex 400 g/m² **(seulement pour modèles avec rouleau revêtu en TENAX)** Nomex- Filz 400 g/m² **(nur für TENAX-bewickelte Modelle)** Muletón Nomex 400 g/m² **(sólo para modelos con rodillo revestido en TENAX)**	MN100/25	MN120/25	MN1400ES	1
4	Tappo nylon Nylon cap Bouchon nylon Nylonstöpsel Tapón de nailón	5010046			1
5	G-SIL: Spray silicone scivolante G-SIL: Silicone gliding spray G-SIL: Spray de glissement au silicone G-SIL: Silikon-Gleitspray G-SIL: Spray de silicona deslizante	G-SIL500			1

info@zipnasklade.ru
8(800)500-69-51

© Published by permission of the copyright owner - DO NOT COPY or TRANSMIT

Chest and Temperature Detection 1/2

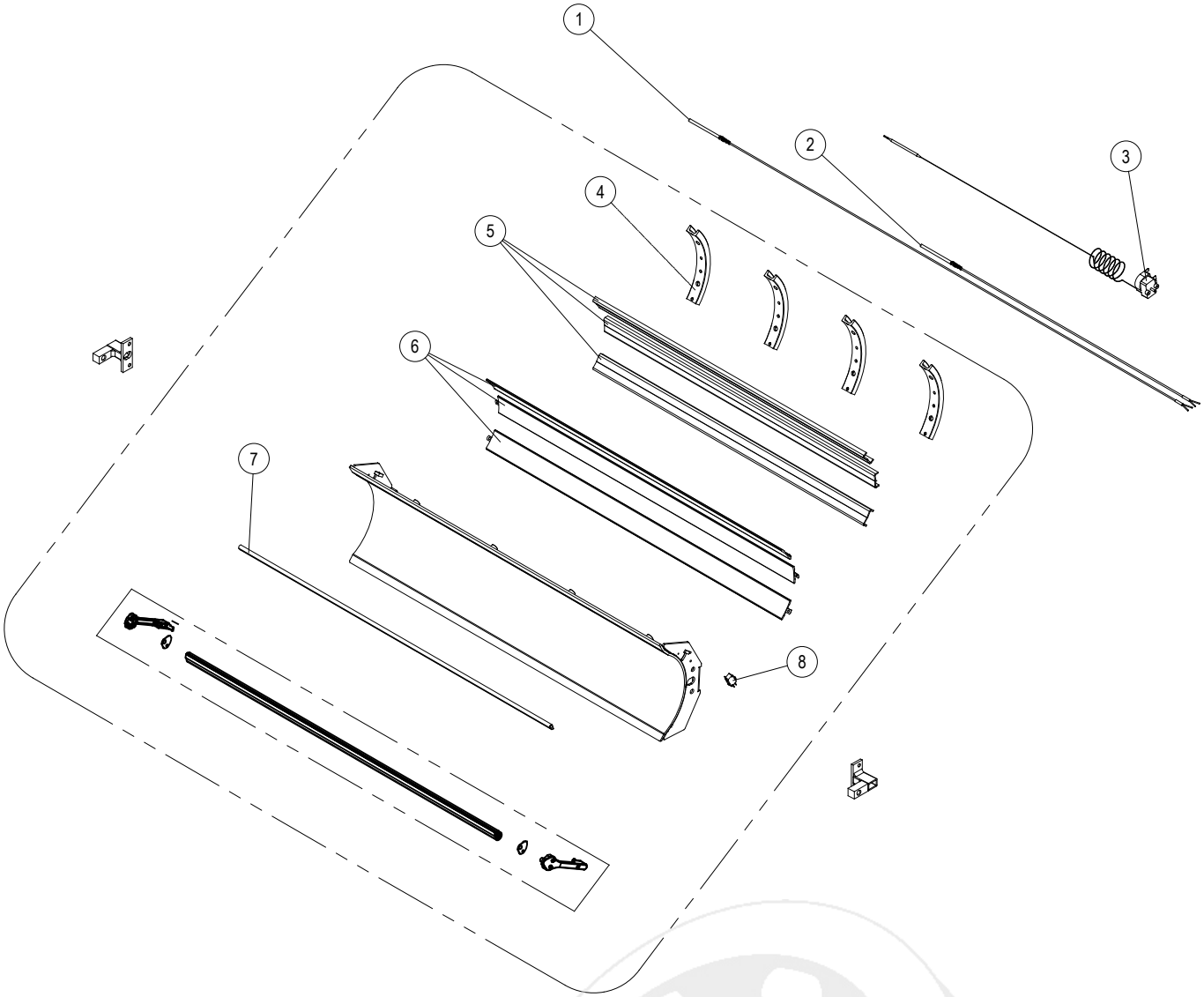

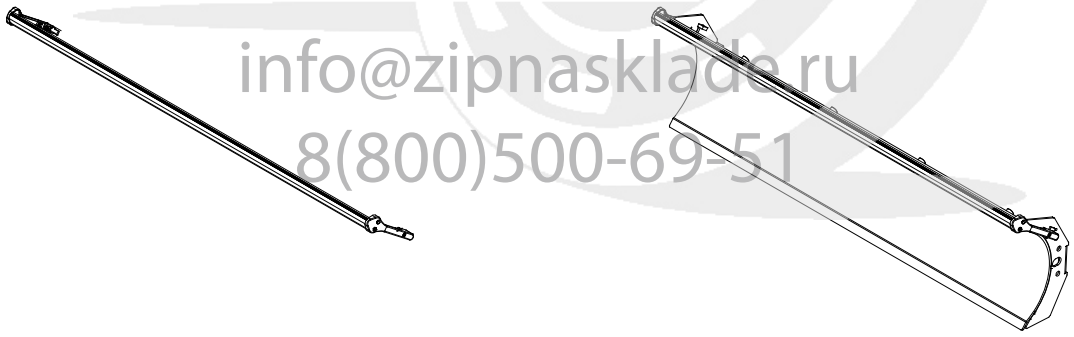

info@zipnasklade.ru
8(800)500-69-51

© Published by permission of the copyright owner - DO NOT COPY or TRANSMIT

Chest and Temperature Detection 1/2

REF	DESCRIPTION	GMP 100.25	GMP 120.25	GMP 1400ES	Nr
1	Sonda sinistra completa di premisonda (solo per modelli con microprocessore) Left side temperature probe, complete of fixation plate (only for models with microprocessor conntrol) Sonde température gauche, complète de plaque de fixage (seulement pour modèles avec microprocesseur) Linker Temperaturfühler, komplett mit Befestigungsplatte (nur für Modelle mit MIkroprozessor) Sonda temperatura izquierda, con placa de fijación (sólo modelos con microprocessador)	R.5060105/01			1
2	Sonda destra completa di premisonda (solo per modelli con microprocessore) Right side temperature probe, complete of fixation plate (only for models with microprocessor conntrol) Sonde température droite, complète de plaque de fixage (seulement pour modèles avec microprocesseur) Rechter Temperaturfühler, komplett mit Befestigungsplatte (nur für Modelle mit MIkroprozessor) Sonda temperatura derecha, con placa de fijación (sólo modelos con microprocessador)	R.5060104/01			1
	Sonda destra completa di premisonda (solo per modelli con termostato Eliwell) Right side temperature probe, complete of fixation plate (only for models fitted with Eliwell thermostat) Sonde température droite, complète de plaque de fixage (seulement pour modèles avec thermostat Eliwell) Rechter Temperaturfühler, komplett mit Befestigungsplatte (nur für Modelle mit Eliwell Thermostaten) Sonda temperatura derecha, con placa de fijación (sólo modelos con termostato Eliwell)	R.5060130/01			1
3	Termostato di sicurezza Safety thermostat Thermostat de sécurité Sicherheitsthermostat Termóstato de seguridad	710 V-1841			1
4	Supporto curvo di fissaggio resistenze Clamp Support incurvé de fixation résistances Gebogene Halterung zur Befestigung der Heizwiderständen Soporte curvo para sujeción resistencias	026012	026012	026012	4 5 6
5	Profilo di bloccaggio resistenza Clamp profil Profil de blocage résistance Befestingungsprofil für Heizwiderstand Perfil de bloque para resistencia	409000112-01	409000112-02	409000112-03	3
6	Resistenza elettrica Heater Résistance électrique Elektrischer Heizwiderstand Resistencia eléctrica	V.220/415: 1FZES047A010 V.260/440: 1FZES047A074	V.220/415: 1FZES047A009 V.260/440: 408000003	V.220/415: 1FZES047A005 V.260/440: 408000008	3
7	Protezione in silicone per conca Silicon heat protection, chest Protection en silicone cuvette Silikon-Hitzabdeckung, Mulde Protección de silicona para cubeta	509000148-01	509000148-01	509000148-01	m 1,0 m 1,2 m 1,4
8	Microinterruttore Microswitch Micro-interrupteur Mikroschalter Microinterruptor	CRO831537AX29			1

info@zipnasklade.ru
8(800)500-69-51

© Published by permission of the copyright owner - DO NOT COPY or TRANSMIT

Chest and Temperature Detection 2/2

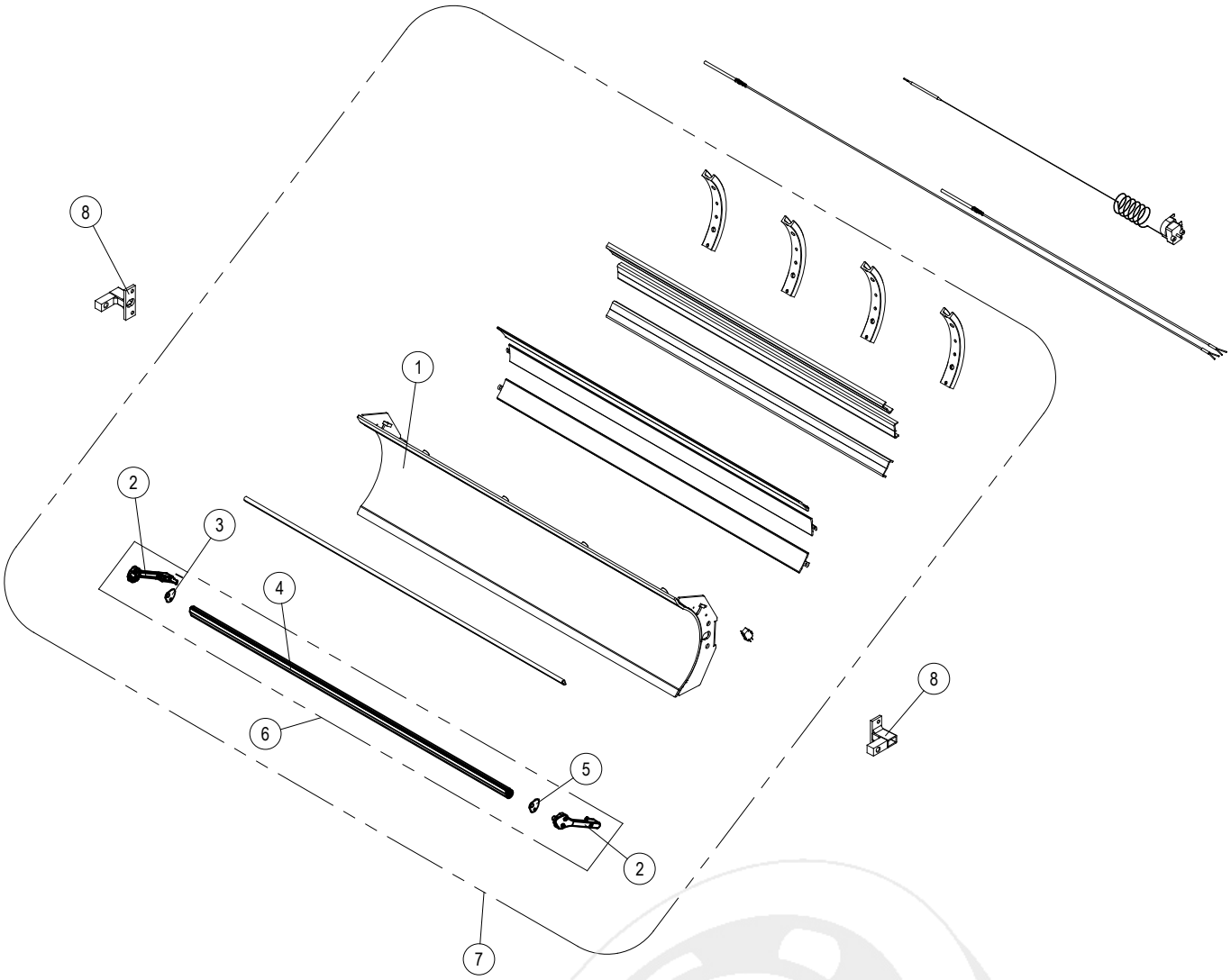

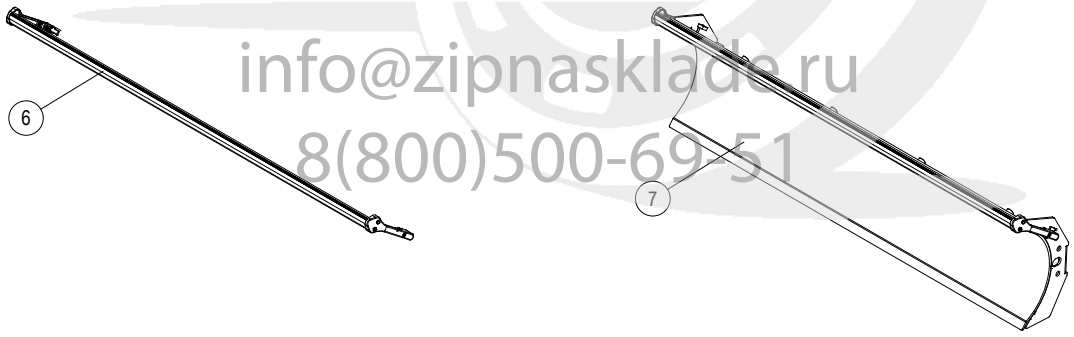

info@zipnasklade.ru
8(800)500-69-51

© Published by permission of the copyright owner - DO NOT COPY or TRANSMIT

Chest and Temperature Detection 2/2

REF	DESCRIPTION	GMP 100.25	GMP 120.25	GMP 1400ES	Nr
1	Conca riscaldante Chest Cuvette Heizmulde Cubeta	490C10004-11	490C10004-12	490C10004-13	1
2	Braccetto per barra salvadita Holder slat for finger bar Bras pour barre protège doigts Arm für Fingerschütz-Stange Brazo para barra salvadedos	509000157-01			2
3	Copriforo braccetto barra salvadita sinistro Left hole cover for holder slat Couvercle pour bras gauche de la barre protège doigts Linker Deckel für Fingerschütz-Stange Arm Tapón para el brazo izquierdo de la barra salvadedos	509000159-02			1
4	Estruso barra salvadita Extruded finger protection bar Extrudé pour barre protège doigts Fliessgepresste Stange für Fingerschütz Barra salvadedos extruida	509000158-03	509000158-04	509000158-05	1
5	Copriforo braccetto barra salvadita destro Right hole cover for holder slat Couvercle pour bras droite de la barre protège doigts Rechter Deckel für Fingerschütz-Stange Arm Tapón para el brazo derecho de la barra salvadedos	509000159-01			1
6	Barra salvadita Finger bar Dispositif protège doigts Fingerschutz-Stange Barra salvadedos	590000068-03 Service bulletin	590000068-04 Service bulletin	590000068-05 Service bulletin	1
7	Conca riscaldante assemblata Chest assy Cuvette assemblée Heizmulde komplett mit Heizstäben Cubeta con resistencias	580000036-01	580000036-02	580000036-03	1
8	Supporto conca Chest support Support cuvette Heizmuldenhalterung Soporte cubeta	590ZL0072-01			2

info@zipnasklade.ru
8(800)500-69-51

© Published by permission of the copyright owner - DO NOT COPY or TRANSMIT

Central Panels and Introduction System

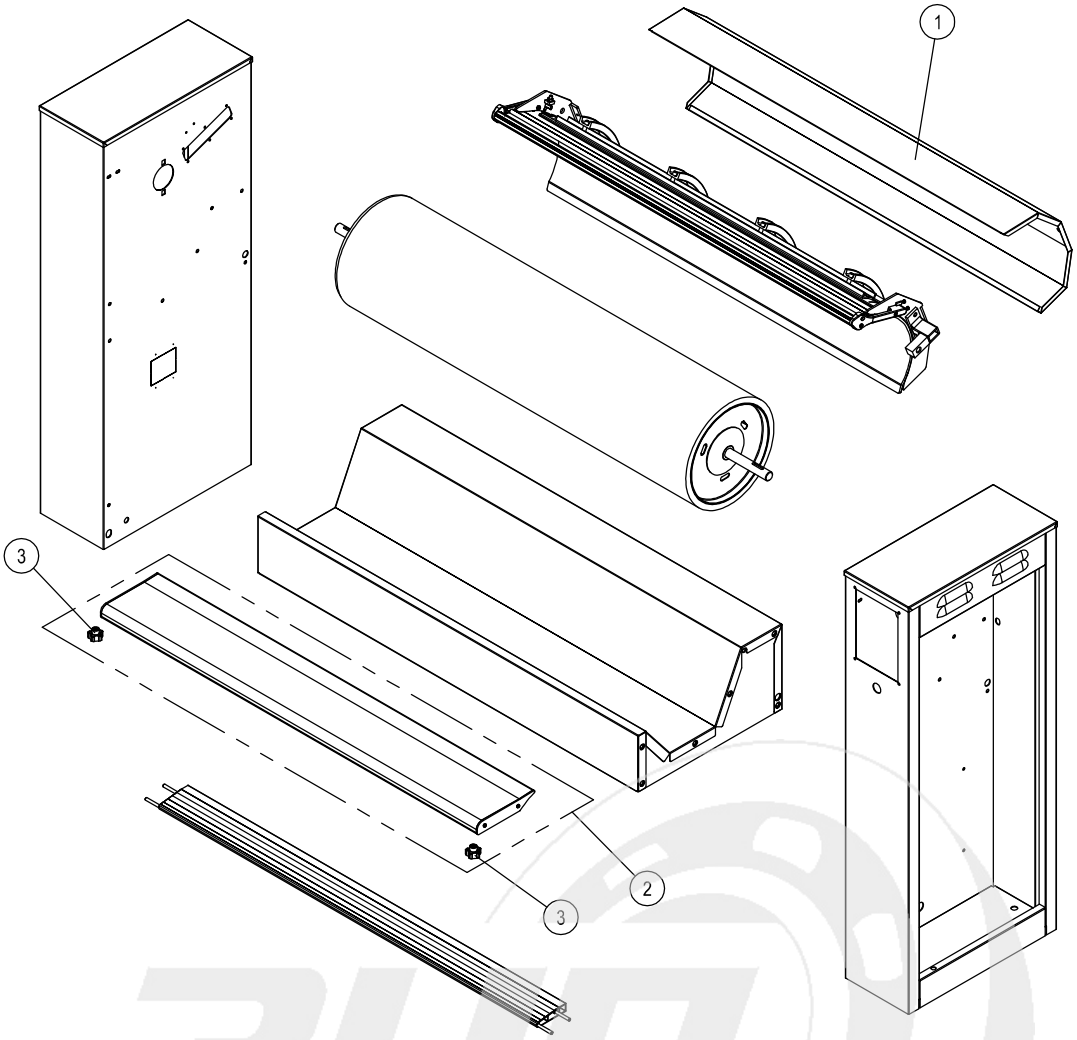

info@zipnasklade.ru
8(800)500-69-51

© Published by permission of the copyright owner - DO NOT COPY or TRANSMIT

Central Panels and Introduction System

REF	DESCRIPTION	GMP 100.25	GMP 120.25	GMP 1400ES	Nr
1	Protezione posteriore Cover rear Protection postérieure Hintere Abdeckung Placa protectora trasera	590000075-03	590000075-04	590000075-05	1
2	Tavola di introduzione Introduction table Table introduction Holzbrett zur Wäscheinführung Table de introducción	490000002-03	490000002-04	490000002-05	1
3	Pomolo bloccaggio tavola Pommel for wooden table Pommeau blocage table Holzbrett-Befestigungsgriff Botón bloqueo tabla	5010173			2

info@zipnasklade.ru
8(800)500-69-51

© Published by permission of the copyright owner - DO NOT COPY or TRANSMIT

Right Side: Generic Components

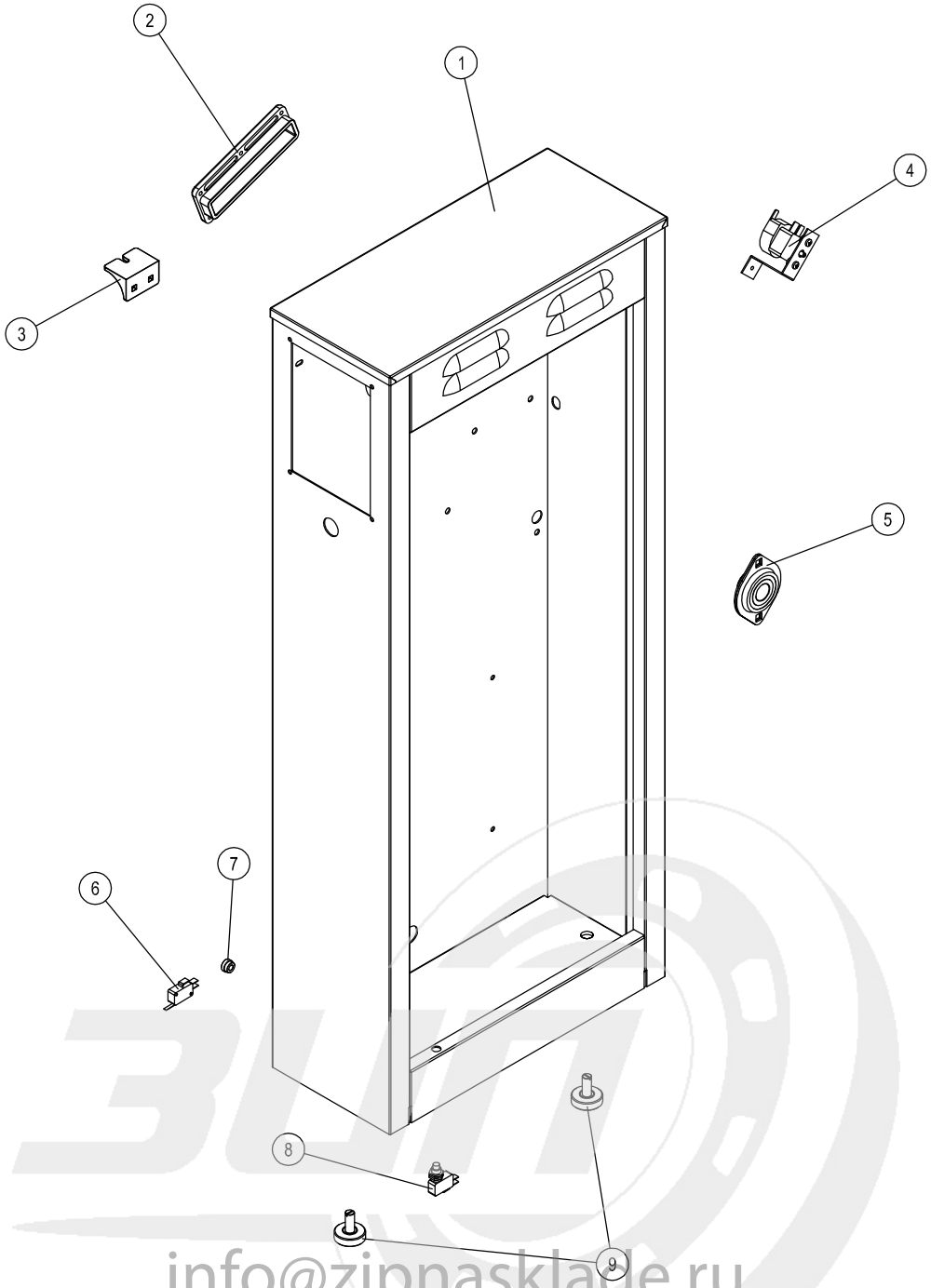

info@zipnasklade.ru
8(800)500-69-51

© Published by permission of the copyright owner - DO NOT COPY or TRANSMIT

Right Side: Generic Components

REF	DESCRIPTION	GMP 100.25	GMP 120.25	GMP 1400ES	Nr
1	Fianco destro, grigio Right side plate, grey Côté droite, gris Rechte Seitenwand, grau Costado derecho, gris	017001 7035			1
2	Guida di scorrimento Slide guide Guide de glissement Rollschiene Guía de deslizamiento	509000156-01 Service bulletin			1
3	Supporto tavola Table support Support table Holzbretthalterung Soporte tabla	609Z00396-01			1
4	Termostato di sicurezza Safety thermostat Thermostat de sécurité Sicherheitsthermostat Termóstato de seguridad	P.710 V-1841			1
5	Supporto con cuscinetto Support with bearing Support avec coussinet Halterung mit Lager Soporte con cojinete	SBPFL204			1
	Supporto con cuscinetto, modelli “.A” Support with bearing, “.A” models Support avec coussinet, modèles “.A” Halterung mit Lager, “.A” Modelle Soporte con cojinete, modelos “.A”	027034			1
6	Microinterruttore Microswitch Micro-interrupteur Mikroschalter Microinterruptor	CRO831613AR25			1
7	Boccola flangiata per pedaliera Pedal bushing Bague pédalier Pedalbüchse Anillo para pedal	011034			1
8	Microinterruttore Microswitch Micro-interrupteur Mikroschalter Microinterruptor	CRO831318			1
9	Piedino regolabile Adjustable foot Petit pied reglable Regulierbar Fuß Pie ajustable	017PIEREG35			2

info@zipnasklade.ru
8(800)500-69-51

© Published by permission of the copyright owner - DO NOT COPY or TRANSMIT

Right Side: Drive Components 1/2

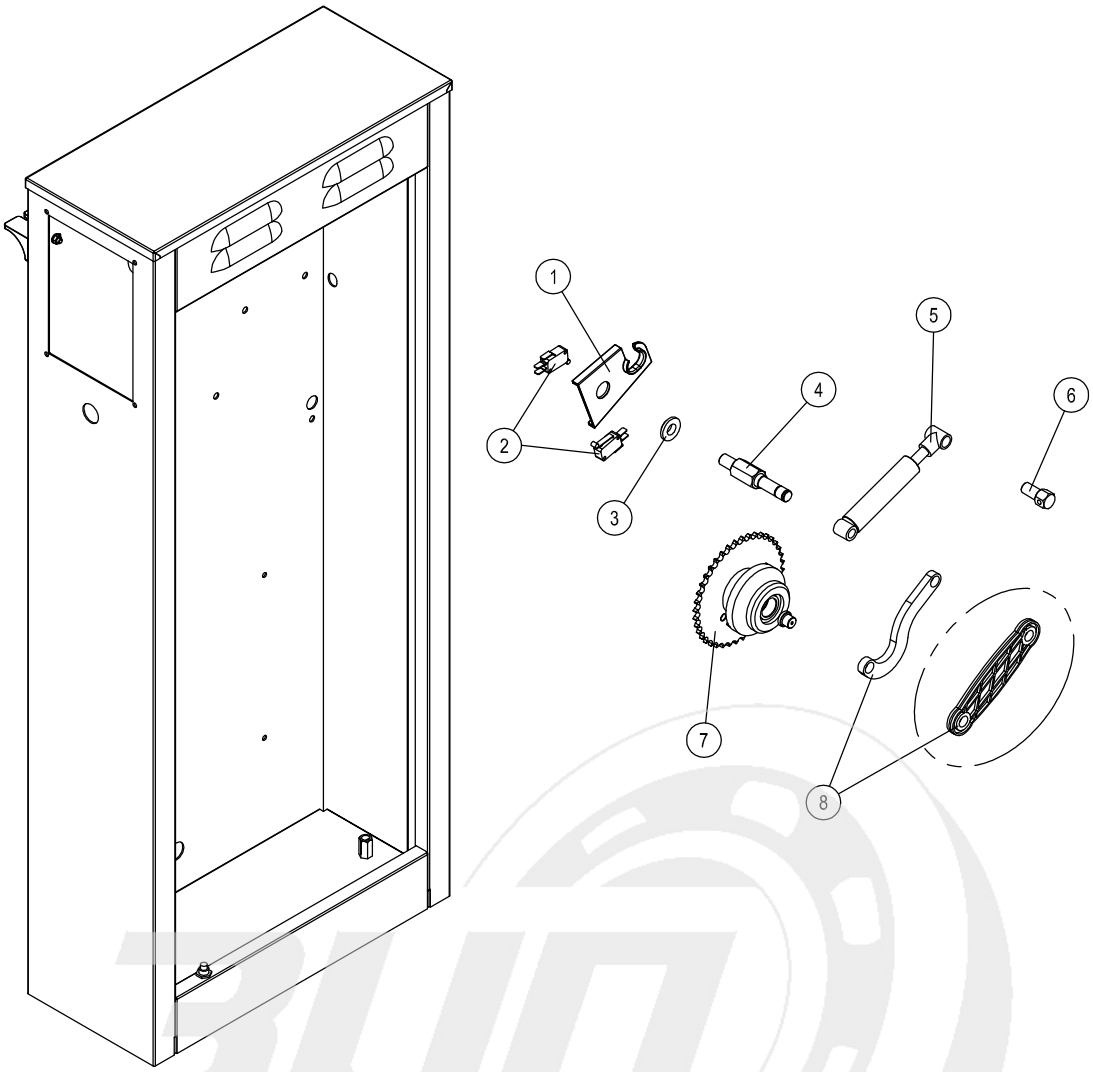

info@zipnasklade.ru
8(800)500-69-51

© Published by permission of the copyright owner - DO NOT COPY or TRANSMIT

Right Side: Drive Components 1/2

REF	DESCRIPTION	GMP 100.25	GMP 120.25	GMP 1400ES	Nr
1	Piastrina microinterruttore conca plate for microswitch Plaque pour micro-interrupteur presse Plättchen für Heizmulden-Mikroschalter Plaquita para microinterruptor cuenco	509000155-01 Service bulletin			1
2	Microinterruttore Microswitch Micro-interrupteur Mikroschalter Microinterruptor	CRO831613ER24			2
3	Distanziale per supporto conca Spacer for chest support Epaisseur pour support cuvette Distanzstück für Heizmuldenhalterung Espesor para soporte del cubeta	509Z00160-01			1
4	Perno esagonale per molla a gas anteriore Front hexagonal pin for gas spring Tourillon hexagonal antérieur pour ressort à gaz Vorderer Sechskantbolzen für Gasfeder Perno hexagonal frontal para resorte a gas	509Z00163-01			1
5	Molla a gas Gas spring Ressort a gaz Gasfeder Resorte a gas	221017036	221017036	221017036 TENAX models: 221017044	1
6	Bloccaggio molla a gas Lock for gas spring Blocage ressort a gaz Gasfeder-Arretierung Bloqueo resorte a gas	011020Z			1
7	Dispositivo di movimentazione destro Right shafting device Dispositif de mouvement droit Rechte Antriebvorrichtung Dispositivo de transmisión derecho	490100010			1
	Dispositivo di movimentazione destro, modelli ".A" Right shafting device, ".A" models Dispositif de mouvement droit, modèles ".A" Rechte Antriebvorrichtung, ".A" Modelle Dispositivo de transmisión derecho, modelos ".A"	590000057			1
8	Asta rinvio per conca Connecting rod Barre renvoi pour presse Vorgelegestange für Mulde Barra transmisión para cuenco	409000095			1
	Asta rinvio per conca, modelli ".A" Connecting rod, ".A" models Barre renvoi pour presse, modèles ".A" Vorgelegestange für Mulde, ".A" Modelle Barra transmisión para cuenco, modelos ".A"	509Z00131			1

info@zipnasklade.ru
8(800)500-69-51

© Published by permission of the copyright owner - DO NOT COPY or TRANSMIT

Right Side: Drive Components 2/2

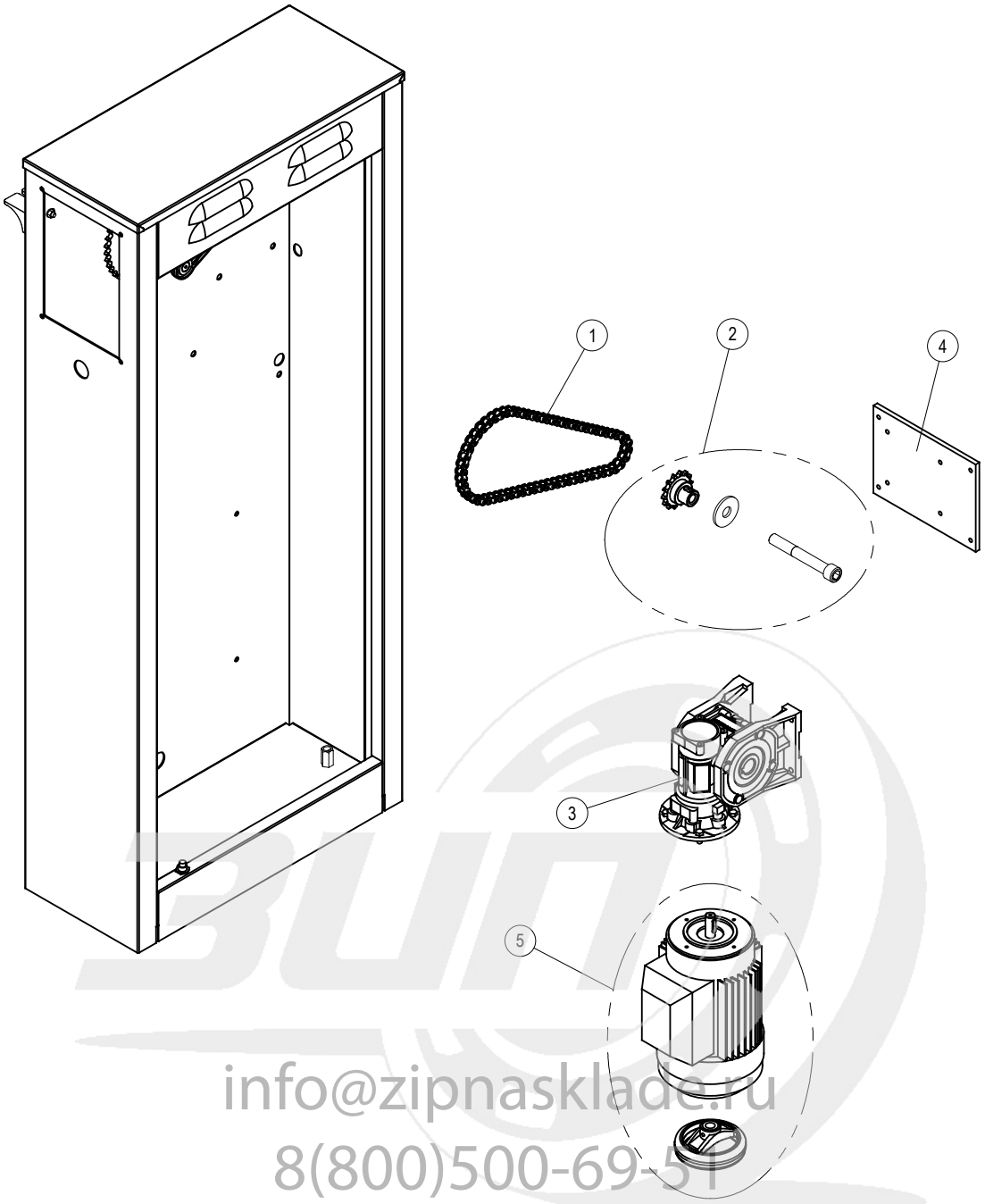

info@zipnasklade.ru
8(800)500-69-51

© Published by permission of the copyright owner - DO NOT COPY or TRANSMIT

Right Side: Drive Components 2/2

REF	DESCRIPTION	GMP 100.25	GMP 120.25	GMP 1400ES	Nr
1	Catena 3/8" Chain 3/8" Chaîne 3/8" Kette 3/8" Cadena 3/8"	026007			1
2	Pignone riduttore completo di vite e rondella Pinion to reduction gear complete of screw and washer Pignon reducteur complet de vis et rondelle Untersetzungsgetriebe-Ritzel komplett mit Schraube und Scheibe Piñón reductor completo con tornillo y arandela	R.Z14F			1
3	Riduttore Reduction gear Reducteur Untersetzungsgetriebe Reductor	RMI 40S/90			1
4	Piastra riduttore Plate to reduction gear Plaque réducteur Untersetzungsgetriebe-Platte Placa reductor	011024Z			1
5	Motore completo di volantino d'emergenza Motor complete of handwheel Moteur complet de volant Motor komplett mit Handrad Motor con volante	0,25 Hp | V.230 1N 50Hz | 580000038-03 0,25 Hp | V.220 1N 60Hz | 580000038-10 0,25 Hp | V.230 1N 60Hz | 580000038-08 0,25 Hp | V.230/3 - V.400 3N 50Hz | 580000038-02 0,25 Hp | V.240/3 - V.415 3N 50Hz | 580000038-06 0,25 Hp | V.230/3 - V.400 3N 60Hz | 580000038-09			1

info@zipnasklade.ru
8(800)500-69-51

© Published by permission of the copyright owner - DO NOT COPY or TRANSMIT

Electric Components: 1 Ironing Speed, Push-Buttons Control 1/2

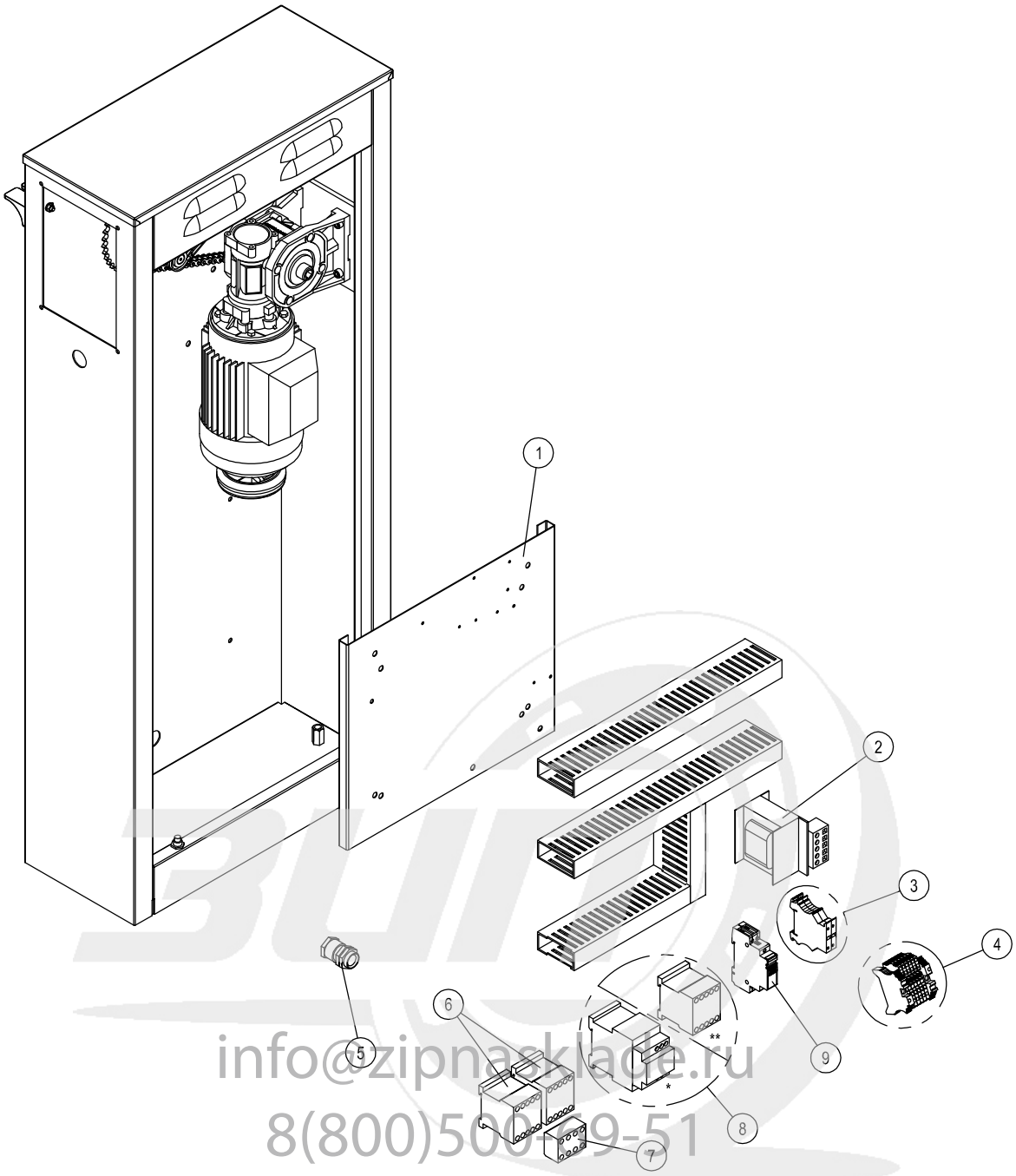

info@zipnacklade.ru
8(800)500-69-51

© Published by permission of the copyright owner - DO NOT COPY or TRANSMIT

Electric Components: 1 Ironing Speed, Push-Buttons Control 1/2

REF	DESCRIPTION	GMP 100.25	GMP 120.25	GMP 1400ES	Nr
1	Lamierato quadro elettrico Electric board support plate Plaque de support tableau électrique Elektroanlage-Halterungsplatte Chapa para soporte cuadro eléctrico		509000001		1
2	Trasformatore (fare riferimento allo schema elettrico della macchina) Transformer (for details please refer to wiring diagram) Transformateur (pour le détail se référer au schéma électrique) Trafo (für Detail sieh Schaltplan) Transformador (ver esquema eléctrico)				1
3	Fusibili (fare riferimento allo schema elettrico della macchina) Fuses (for details please refer to wiring diagram) Fusibles (pour le détail se référer au schéma électrique) Sicherungen (für Detail sieh Schaltplan) Fusibles (ver esquema eléctrico)				
4	Morsetti (fare riferimento allo schema elettrico della macchina) Terminals (for details please refer to wiring diagram) Bornes (pour le détail se référer au schéma électrique) Klemmen (für Detail sieh Schaltplan) Terminales (ver esquema eléctrico)				
5	PG13,5 PG13,5 PG13,5 PG13,5 PG13,5		GW52004		1
6	Contattore Contactor Contacteur Schütz Contactor		5060141		2
7	Blocco contatti Contact block Bloc de contacts Kontaktblock Bloque de contactos		5060145		1
8	Contattore resistenze Heating contactor Contacteur résistances Heizstäben-Schütz Contactor resistencias		1-ph: 100-C43KJ00 3-ph: 5060141		1
9	Contattore Contactor Contacteur Schütz Contactor		FIN20238024		1

info@zipnasklade.ru
8(800)500-69-51

© Published by permission of the copyright owner - DO NOT COPY or TRANSMIT

Electric Components: 1 Ironing Speed, Push-Buttons Control 2/2

VERSION STARTING ~ MARCH 2018

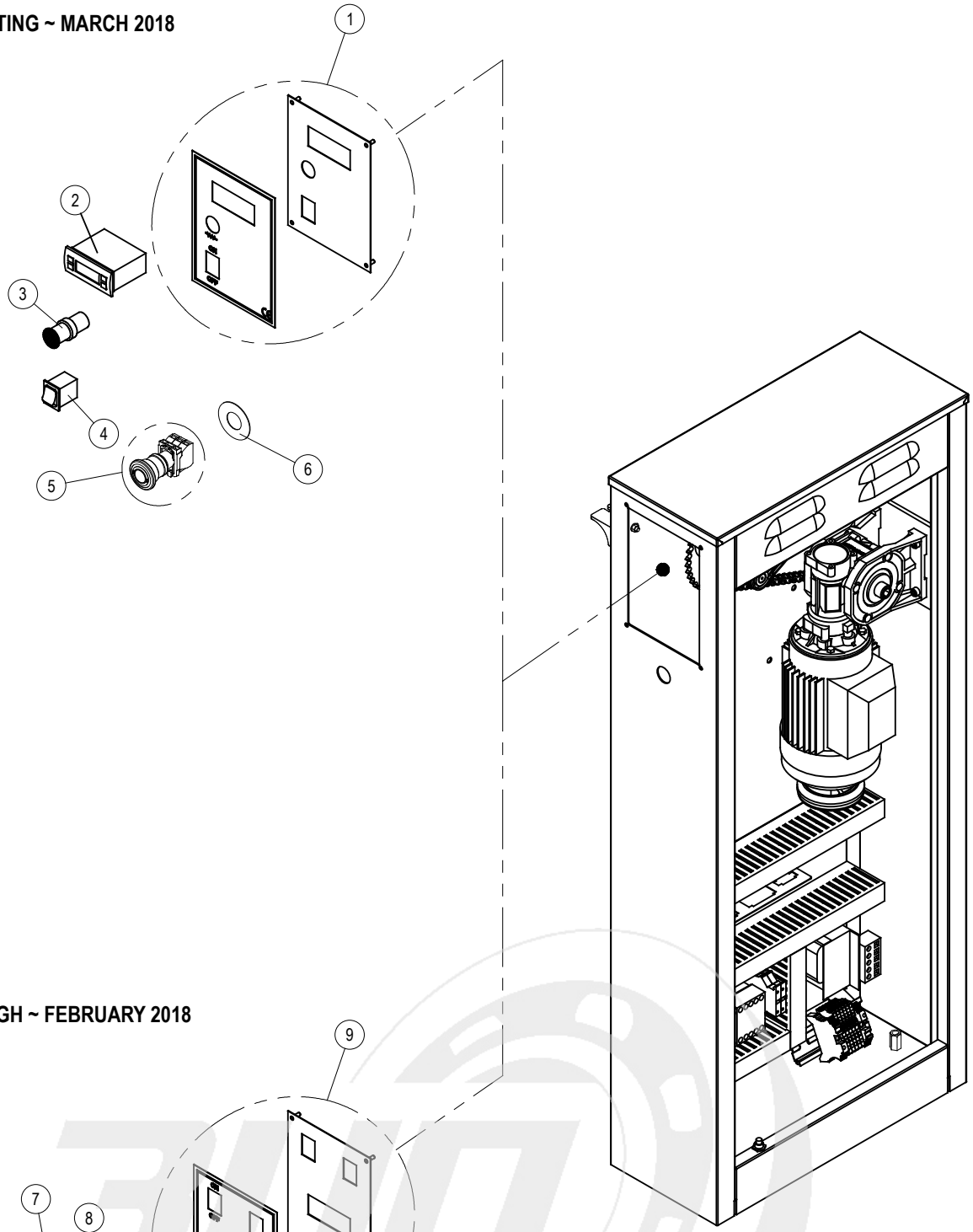

VERSION THROUGH ~ FEBRUARY 2018

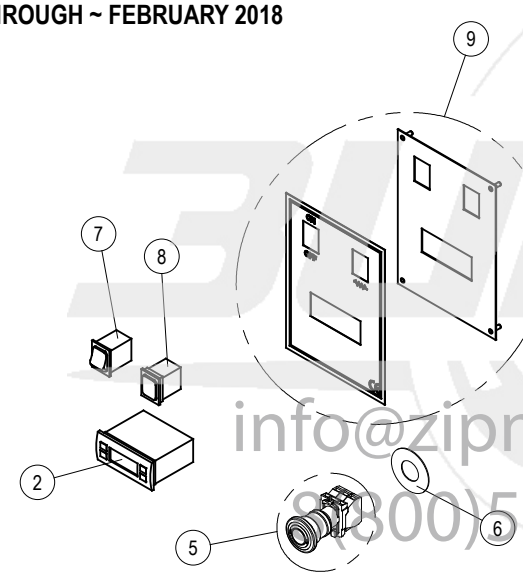

info@zipnasklade.ru
8(800)500-69-51

© Published by permission of the copyright owner - DO NOT COPY or TRANSMIT

Electric Components: 1 Ironing Speed, Push-Buttons Control 2/2

REF	DESCRIPTION	GMP 100.25	GMP 120.25	GMP 1400ES	Nr
1	Pannello comandi, silver, marchio GMP Control panel, silver, GMP brand Panneau de contrôle, argent, marque GMP Schalttafel, silber, Marke GMP Panel de mandos, plata, marca GMP		00M.300.00035		1
	Pannello comandi, silver, anonimo Control panel, silver, no name Panneau de contrôle, argent, sans marque Schalttafel, silber, ohne Marke Panel de mandos, plata, sin marca		00M.300.00036		1
2	Termostato elettronico completo di sonda e premisonda Electronic thermostat complete of sensor and sensor fixation plate Thermostat électronique complet de sonde et plaque fixation sonde Elektronischer Thermostat komplett mit Sensor und Sensorbefestigungsplatte Termóstato electrónico completo de sensor y placa de fijación del sensor		X05098		1
3	Spia resistenze rotonda, gialla Round heaters control light, orange Lampe ronde contrôle résistances, jaune Runde Heizelementen-Licht, gelb Luz resistencias, redonda, amarilla		000.100.00017		1
4	Pulsante ON / OFF, bianco ON /OFF button, white Bouton ON /OFF, blanc ON /OFF Taste, weiss Botón ON / OFF, blanco		000.100.00018		1
5	Pulsante emergenza Emergency stop button Poussoir d'urgence Not-Aus Schalter Pulsador de emergencia		480000016		1
6	Disco giallo per pulsante emergenza Yellow sticker for emergency stop button Adhésif jaune pour poussoir urgence Gelber Aufkleber für Not-Aus-Schalter Adhesivo amarillo para pulsador emergencia		027106		1
7	Pulsante ON / OFF, bianco ON /OFF button, white Bouton ON /OFF, blanc ON /OFF Taste, weiss Botón ON / OFF, blanco		0401/2/D		1
8	Spia resistenze, gialla Heaters control light, orange Lampe contrôle résistances, jaune Heizelementen-Licht, gelb Luz resistencias, amarilla		0401/SG		1
9	Pannello comandi, grigio Control panel, grey Panneau de contrôle, gris Schalttafel, grau Panel de mandos, gris		490000022-01		1

info@zipnasklade.ru
8(800)500-69-51

© Published by permission of the copyright owner - DO NOT COPY or TRANSMIT

Electric Components: Variable Ironing Speed, Push-Buttons Control 1/3

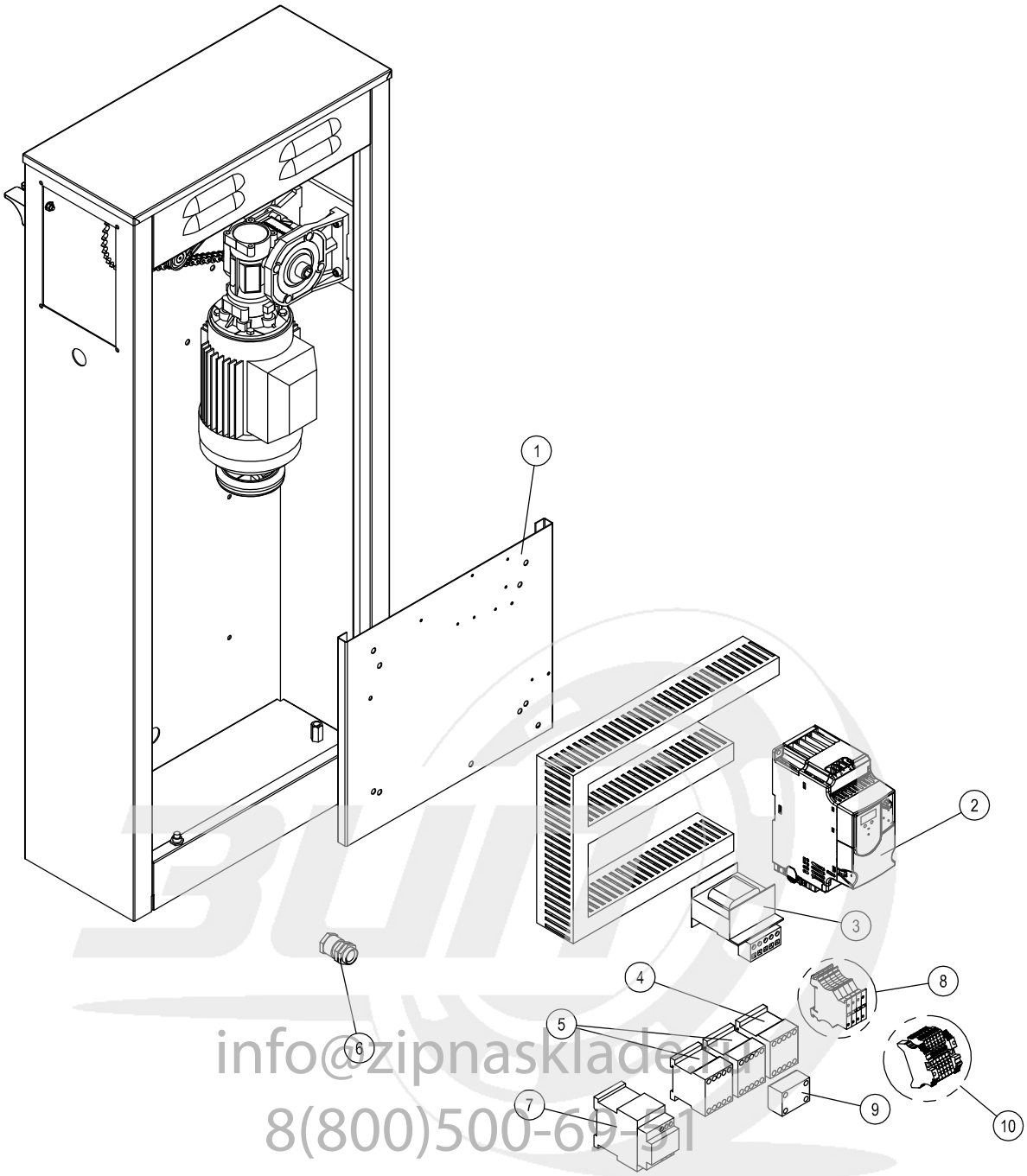

info@zipnasklade.ru
8(800)500-69-51

© Published by permission of the copyright owner - DO NOT COPY or TRANSMIT

Electric Components: Variable Ironing Speed, Push-Buttons Control 1/3

REF	DESCRIPTION	GMP 100.25	GMP 120.25	GMP 1400ES	Nr
1	Lamierato quadro elettrico Electric board support plate Plaque de support tableau électrique Elektroanlage-Halterungsplatte Chapa para soporte cuadro eléctrico	509000001			1
2	Inverter Frequency controller Variateur de fréquence Frequenzumrichter Variadod de velocidad	480000053-01 Service bulletin			1
3	Trasformatore (fare riferimento allo schema elettrico della macchina) Transformer (for details please refer to wiring diagram) Transformateur (pour le détail se référer au schéma électrique) Trafo (für Detail sieh Schaltplan) Transformador (ver esquema eléctrico)				1
4	Contattore Contactor Contacteur Schütz Contactor	5060143			1
5	Contattore Contactor Contacteur Schütz Contactor	5060141			2
6	PG13,5 PG13,5 PG13,5 PG13,5 PG13,5	GW52004			1
7	Contattore resistenze Heating contactor Contacteur résistances Heizstäben-Schütz Contactor resistencias	1-ph: 100-C43KJ00 3-ph: 100-C09KJ01			1
8	Fusibili (fare riferimento allo schema elettrico della macchina) Fuses (for details please refer to wiring diagram) Fusibles (pour le détail se référer au schéma électrique) Sicherungen (für Detail sieh Schaltplan) Fusibles (ver esquema eléctrico)				
9	Blocco contatti Contact block Bloc de contacts Kontaktblock Bloque de contactos	5060144			1
10	Morsetti (fare riferimento allo schema elettrico della macchina) Terminals (for details please refer to wiring diagram) Bornes (pour le détail se référer au schéma électrique) Klemmen (für Detail sieh Schaltplan) Terminales (ver esquema eléctrico)				

info@zipnasklade.ru
8(800)500-69-51

© Published by permission of the copyright owner - DO NOT COPY or TRANSMIT

Electric Components: Variable Ironing Speed, Push-Buttons Control 2/3

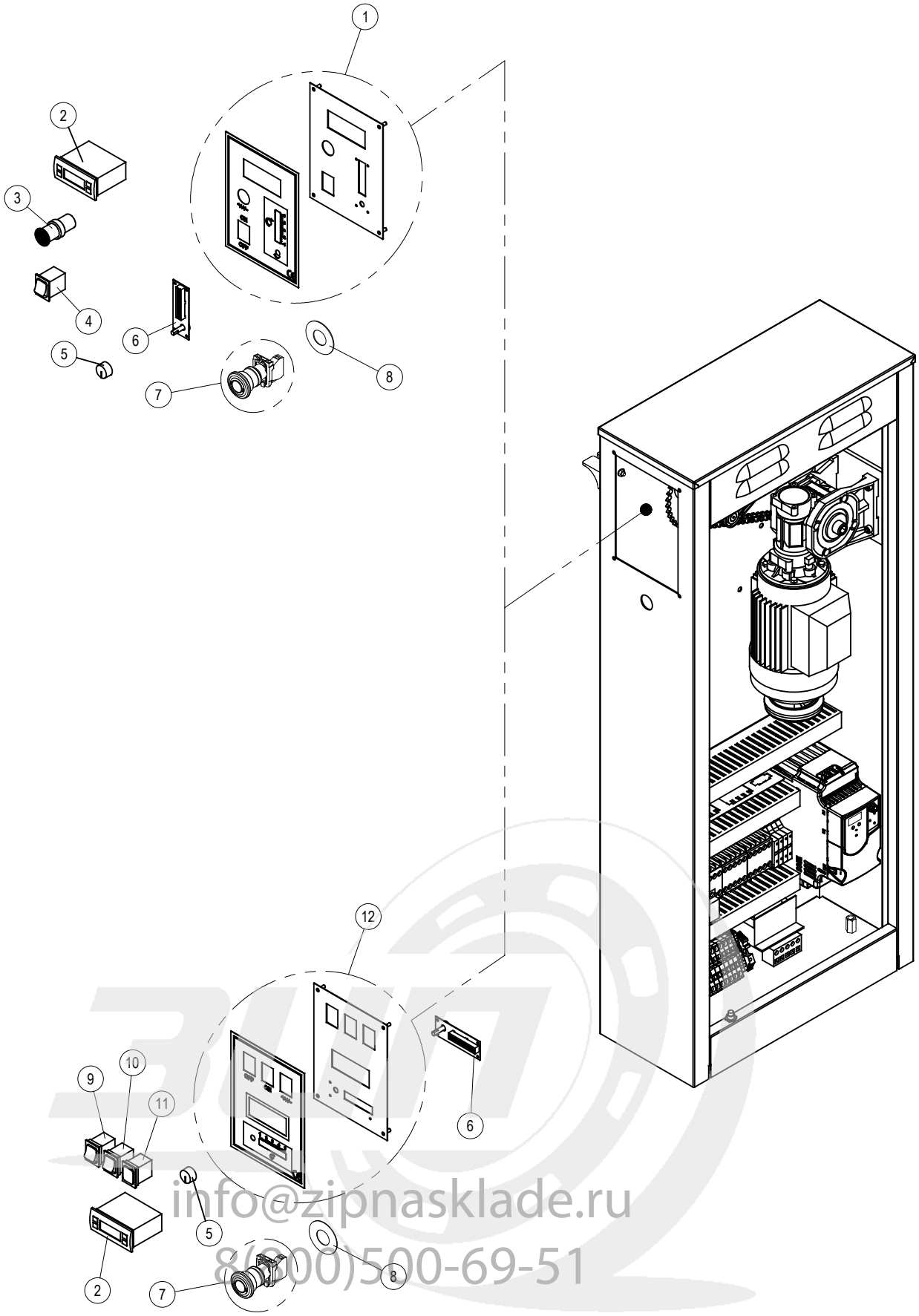

info@zipnasklade.ru
8(800)500-69-51

© Published by permission of the copyright owner - DO NOT COPY or TRANSMIT

Electric Components: Variable Ironing Speed, Push-Buttons Control 2/3

REF	DESCRIPTION	GMP 100.25	GMP 120.25	GMP 1400ES	Nr
1	Pannello comandi, silver, marchio GMP Control panel, silver, GMP brand Panneau de contrôle, argent, marque GMP Schalttafel, silber, Marke GMP Panel de mandos, plata, marca GMP		00M.300.00039		1
	Pannello comandi, silver, anonimo Control panel, silver, no name Panneau de contrôle, argent, sans marque Schalttafel, silber, ohne Marke Panel de mandos, plata, sin marca		00M.300.00040		1
2	Termostato elettronico completo di sonda e premisonda Electronic thermostat complete of sensor and sensor fixation plate Thermostat électronique complet de sonde et plaque fixation sonde Elektronischer Thermostat komplett mit Sensor und Sensorbefestigungsplatte Termóstato electrónico completo de sensor y placa de fijación del sensor		X05098		1
3	Spia resistenze rotonda, gialla Round heaters control light, orange Lampe ronde contrôle résistances, jaune Runde Heizelementen-Licht, gelb Luz resistencias, redonda, amarilla		000.100.00017		1
4	Pulsante ON / OFF, bianco ON /OFF button, white Bouton ON /OFF, blanc ON /OFF Taste, weiss Botón ON / OFF, blanco		000.100.00018		1
5	Manopola reostato Rehostat knob Poignée réhostat Rehostat-Drehknopf Botón reostato		5060180		1
6	Potenziometro elettronico con barra led e manopola (include pos. 5) Potentiometer, electronic, with LED bar and knob (includes pos. 5) Potentiometre électronique avec barre LED et poignée (inclut pos. 5) Elektronischer Potentiometer mit LED-Bar und Knopf (enthält Pos. 5) Potenciometro electrónico con barra LED y botón (incluye pos. 5)		508000001		1
7	Pulsante emergenza Emergency stop button Poussoir d'urgence Not-Aus Schalter Pulsador de emergencia		480000008		1
8	Disco giallo per pulsante emergenza Yellow sticker for emergency stop button Adhésif jaune pour poussoir urgence Gelber Aufkleber für Not-Aus-Schalter Adhesivo amarillo para pulsador emergencia		027106		1
9	Pulsante OFF (rosso) Switch OFF (red) Interrupteur OFF (rouge) OFF Schalter (rot) Pulsador OFF (rojo)		0401/2/DIST		1

info@zipnasklade.ru
8(800)500-69-51

© Published by permission of the copyright owner - DO NOT COPY or TRANSMIT

Electric Components: Variable Ironing Speed, Push-Buttons Control 3/3

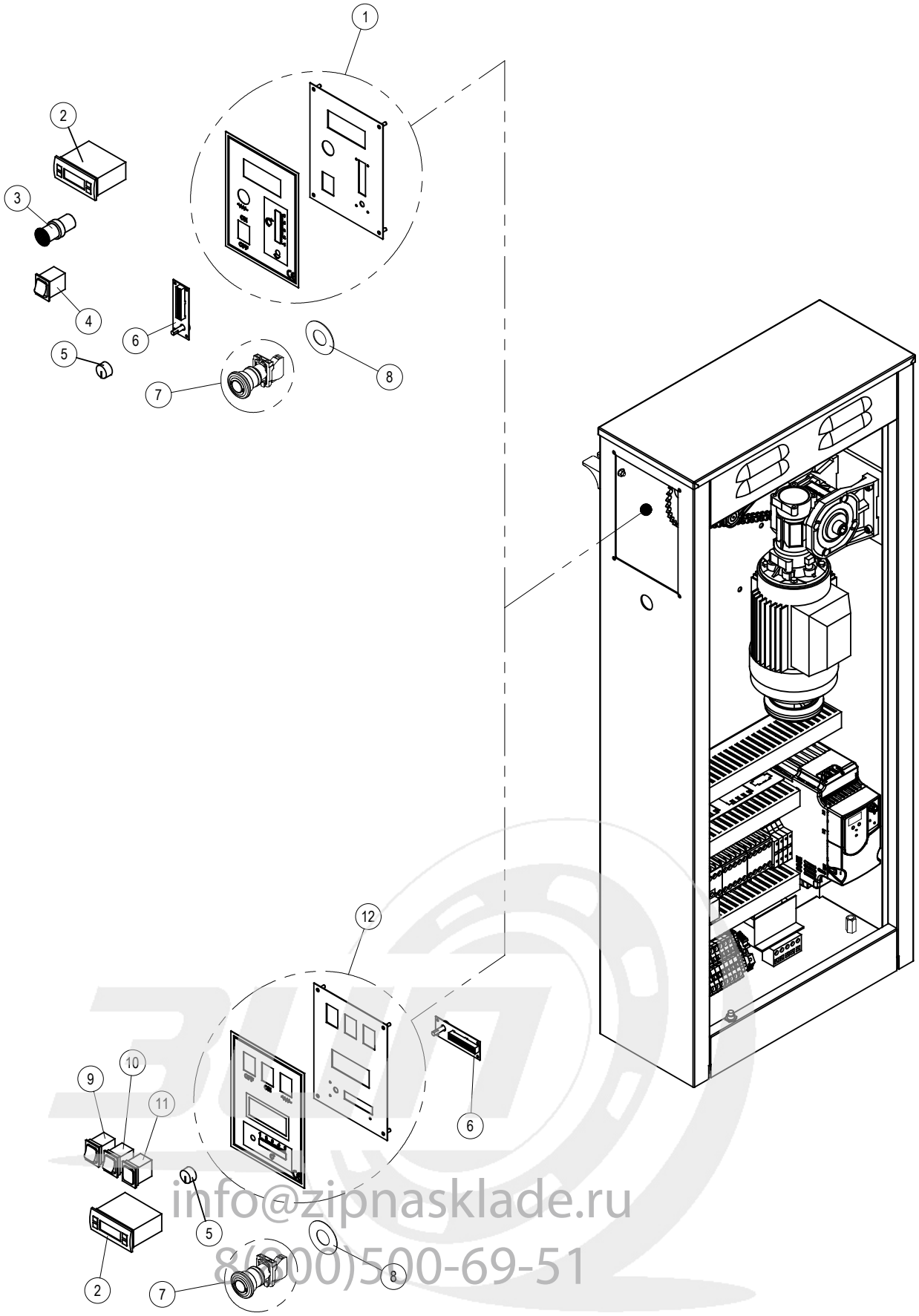

info@zipnasklade.ru
8(800)500-69-51

© Published by permission of the copyright owner - DO NOT COPY or TRANSMIT

Electric Components: Variable Ironing Speed, Push-Buttons Control 3/3

REF	DESCRIPTION	GMP 100.25	GMP 120.25	GMP 1400ES	Nr
10	Pulsante ON (verde) Switch ON (green) Interrupteur ON (vert) ON Schalter (grün) Pulsador ON (verde)		0401/2/IST		1
11	Spia resistenze (gialla) Heaters control light (orange) Lampe contrôle résistances (jaune) Heizelementen-Licht (gelb) Luz resistencias (amarilla)		0401/SG		1
12	Pannello comandi, grigio Control panel, grey Panneau de contrôle, gris Schalttafel, grau Panel de mandos, gris		490000022-01		1

info@zipnasklade.ru
8(800)500-69-51

© Published by permission of the copyright owner - DO NOT COPY or TRANSMIT

Electric Components: 1 Ironing Speed, Microprocessor Control 1/2

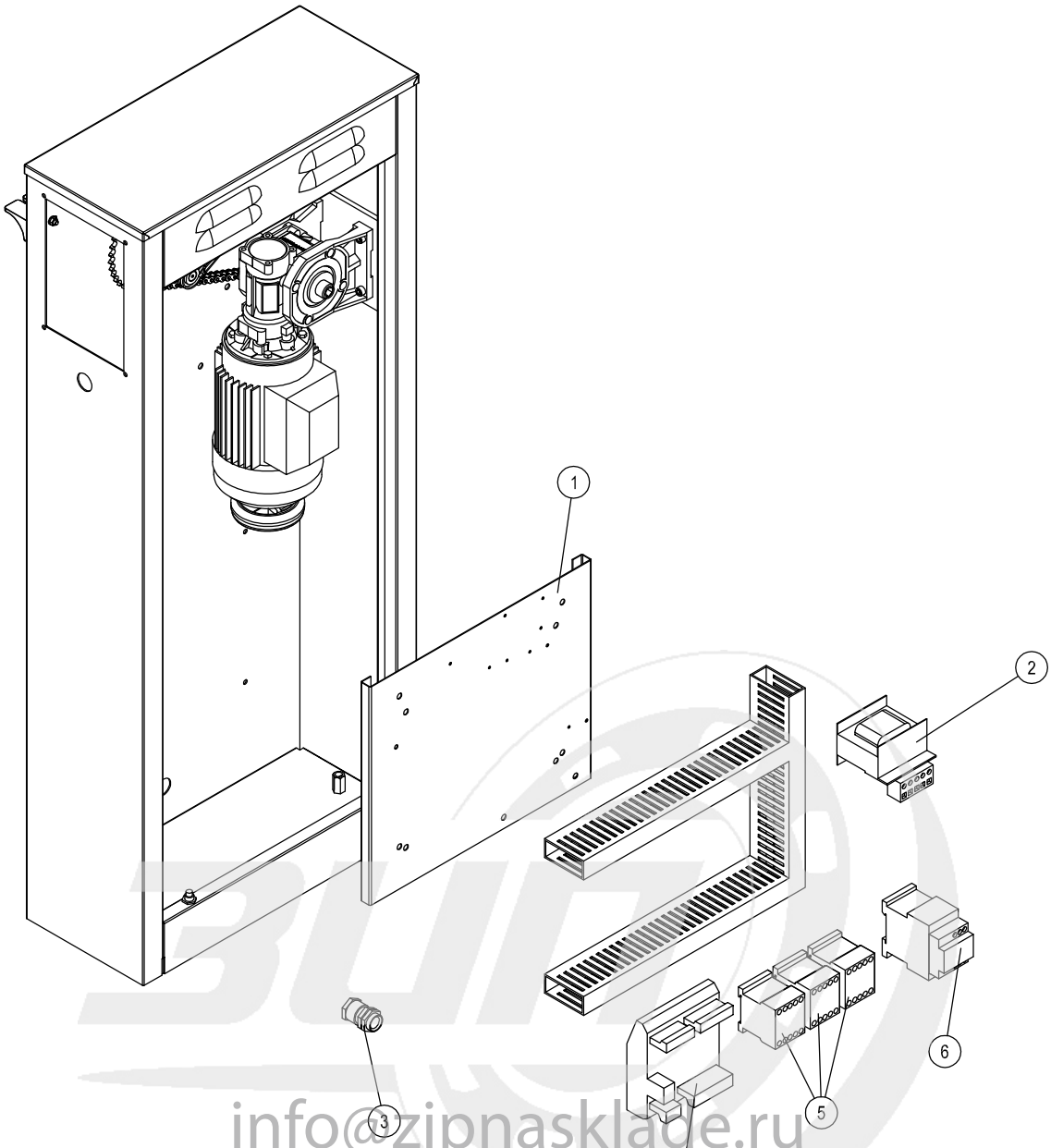

info@zipnasklade.ru
8(800)500-69-51

© Published by permission of the copyright owner - DO NOT COPY or TRANSMIT

Electric Components: 1 Ironing Speed, Microprocessor Control 1/2

REF	DESCRIPTION	GMP 100.25	GMP 120.25	GMP 1400ES	Nr
1	Lamierato quadro elettrico Electric board support plate Plaque de support tableau électrique Elektroanlage-Halterungsplatte Chapa para soporte cuadro eléctrico	509000001			1
2	Trasformatore (fare riferimento allo schema elettrico della macchina) Transformer (for details please refer to wiring diagram) Transformateur (pour le détail se référer au schéma électrique) Trafo (für Detail sieh Schaltplan) Transformador (ver esquema eléctrico)				1
3	PG13,5 PG13,5 PG13,5 PG13,5 PG13,5	GW52004			1
4	Scheda I/O (input / output) I/O (input / output) printboard Platine I/O (input / output) I/O (input / output) Platine Pletina I/O (input / output)	508000006 Service bulletin D10-01 Service bulletin D14-05			1
5	Contattore Contactor Contacteur Schütz Contactor	5060155			3
6	Contattore resistenze Heating contactor Contacteur résistances Heizstäben-Schütz Contactor resistencias	3-ph: 5060156 1-ph: 5060157			1

info@zipnasklade.ru
8(800)500-69-51

© Published by permission of the copyright owner - DO NOT COPY or TRANSMIT

Electric Components: 1 Ironing Speed, Microprocessor Control 2/2

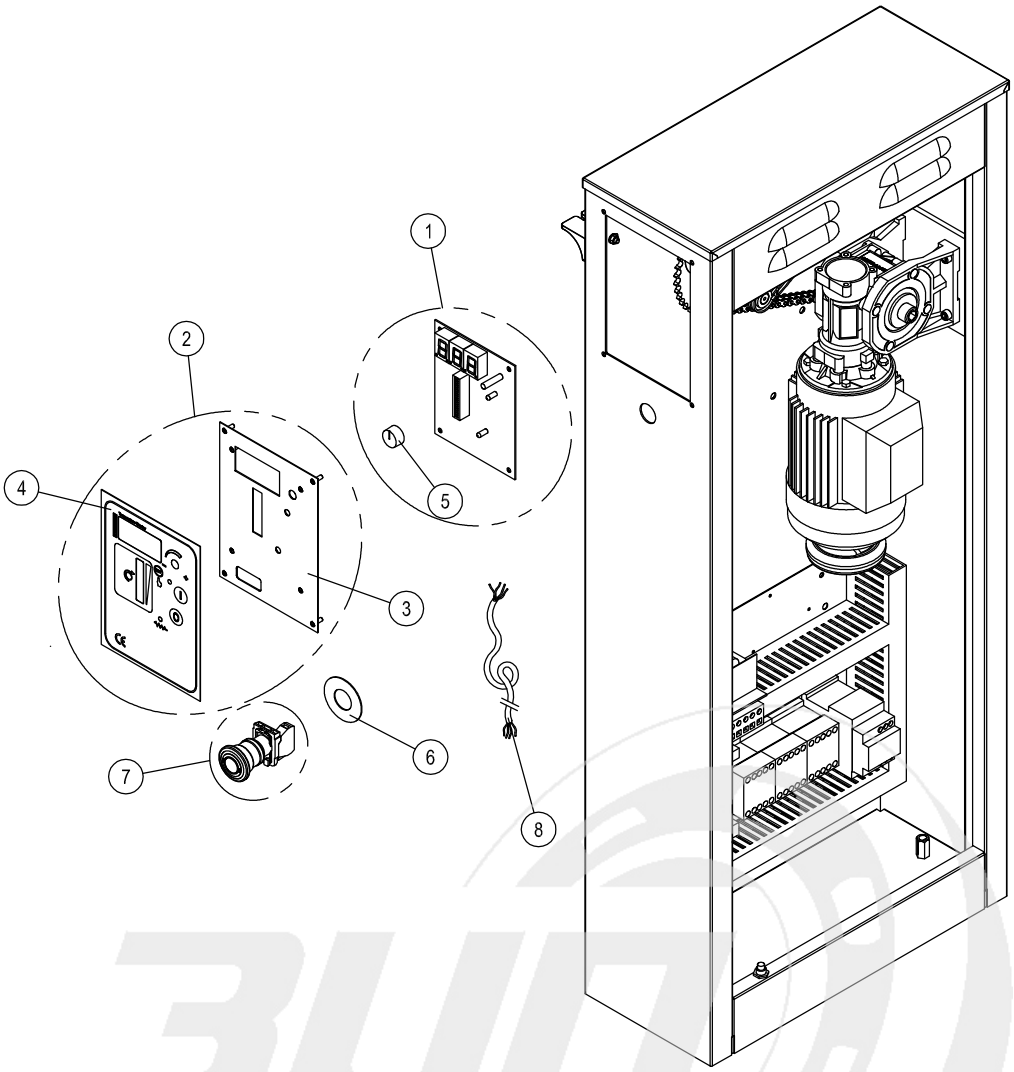

info@zipnasklade.ru
8(800)500-69-51

© Published by permission of the copyright owner - DO NOT COPY or TRANSMIT

Electric Components: 1 Ironing Speed, Microprocessor Control 2/2

REF	DESCRIPTION	GMP 100.25	GMP 120.25	GMP 1400ES	Nr
1	Scheda display Display board Platine display Display-Platine Pletina display		580000030		1
2	Lamierato pannello comandi completo di tastiera Control panel plate complete of keyboard Tôle tableau de contrôle complet de clavier Blech für Schalttafel komplett mit Tastatur Chapa del panel de control con teclado		480000007		1
3	Lamierato pannello comandi Control panel plate Tôle tableau de contrôle Blech für Schalttafel Chapa del panel de control		490000018		1
4	Tastiera Keyboard Panneau de commande adhésif Tastatur Teclado		408000001		1
5	Manopola reostato Rehostat knob Poignée réhostat Rehostat-Drehknopf Botón reostato		5060180		1
6	Disco giallo per pulsante emergenza Yellow sticker for emergency stop button Adhésif jaune pour poussoir urgence Gelber Aufkleber für Not-Aus-Schalter Adhesivo amarillo para pulsador emergencia		027106		1
7	Pulsante emergenza Emergency stop button Poussoir d'urgence Not-Aus Schalter Pulsador de emergencia		480000008		1
8	Cavo di comunicazione Communication cable Câble de communication Kommunikationskabel Cable de comunicación		580000043		1

info@zipnasklade.ru
8(800)500-69-51

© Published by permission of the copyright owner - DO NOT COPY or TRANSMIT

Electric Components: Variable Ironing Speed, Microprocessor Control 1/2

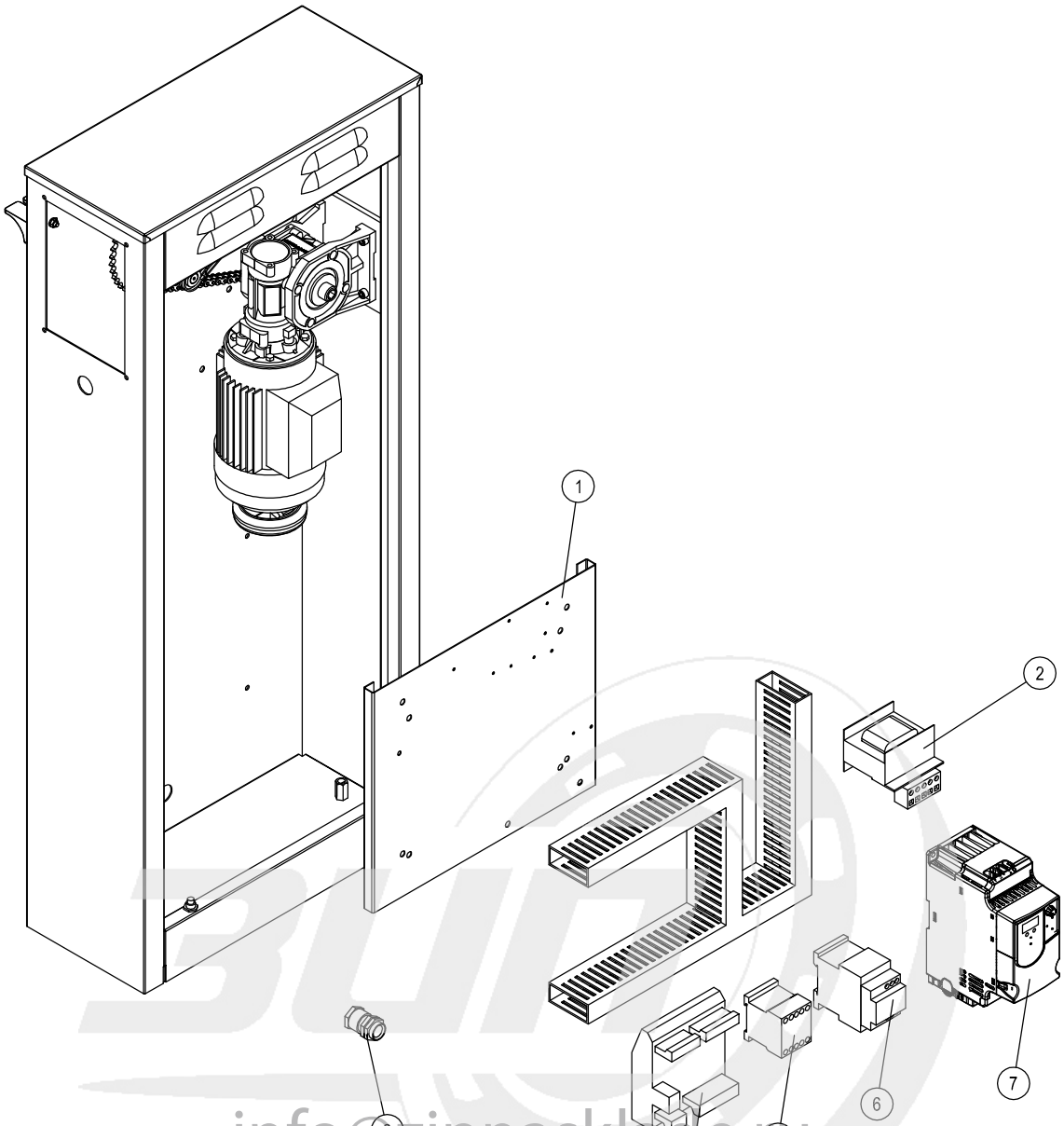

info@zipnasklade.ru
8(800)500-69-51

© Published by permission of the copyright owner - DO NOT COPY or TRANSMIT

Electric Components: Variable Ironing Speed, Microprocessor Control 1/2

REF	DESCRIPTION	GMP 100.25	GMP 120.25	GMP 1400ES	Nr
1	Lamierato quadro elettrico Electric board support plate Plaque de support tableau électrique Elektroanlage-Halterungsplatte Chapa para soporte cuadro eléctrico	509000001			1
2	Lamierato pannello comandi completo di tastiera Control panel plate complete of keyboard Tôle tableau de contrôle complet de clavier Blech für Schalttafel komplett mit Tastatur Chapa del panel de control con teclado				1
3	PG13,5 PG13,5 PG13,5 PG13,5 PG13,5	GW52004			1
4	Scheda I/O (input / output) I/O (input / output) printboard Platine I/O (input / output) I/O (input / output) Platine Pletina I/O (input / output)	508000006 Service bulletin D10-01 Service bulletin D14-05			1
5	Contattore Contactor Contacteur Schütz Contactor	5060155			1
6	Contattore resistenze Heating contactor Contacteur résistances Heizstäben-Schütz Contactor resistencias	5060156			1
7	Inverter Frequency controller Variateur de fréquence Frequenzumrichter Variadod de velocidad	580000034-01 Service bulletin			1

info@zipnasklade.ru
8(800)500-69-51

© Published by permission of the copyright owner - DO NOT COPY or TRANSMIT

Electric Components: Variable Ironing Speed, Microprocessor Control 2/2

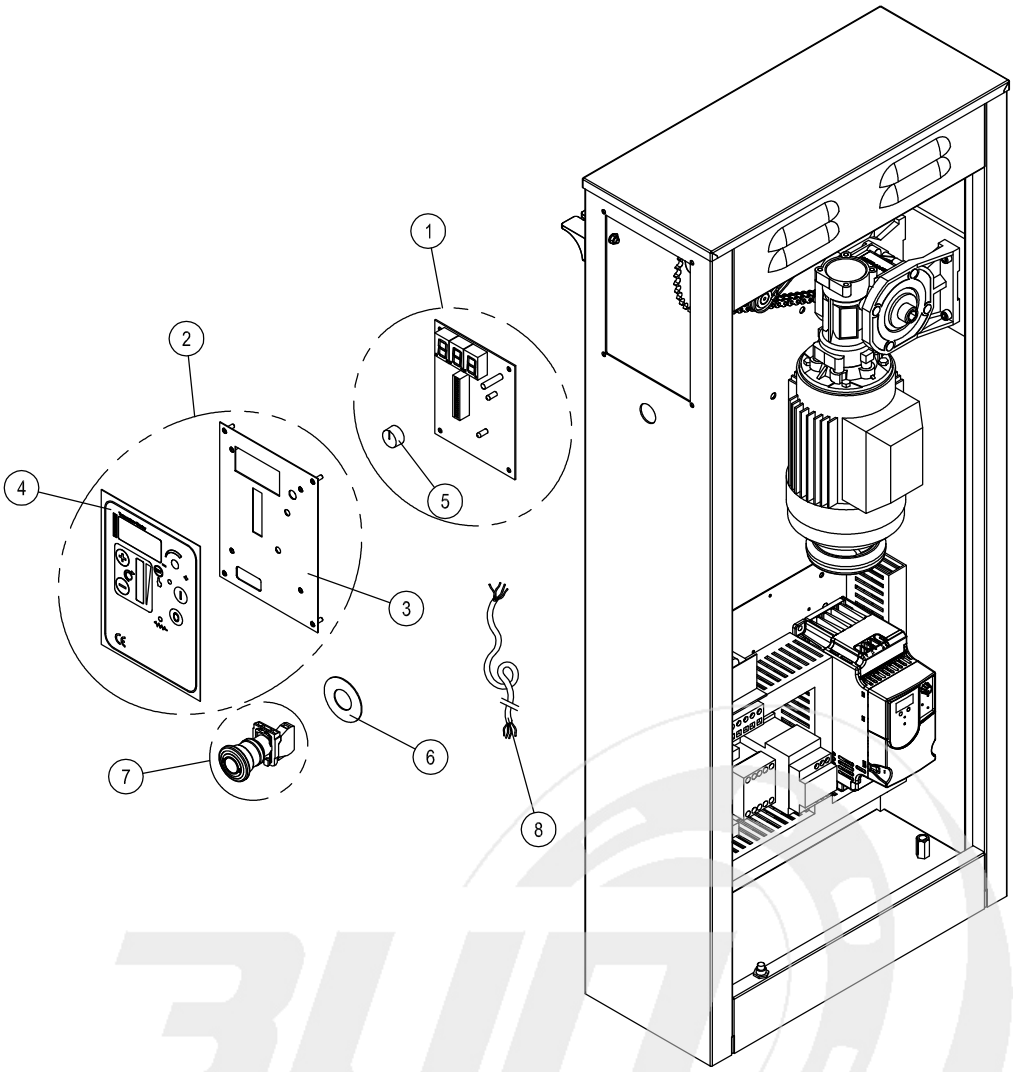

info@zipnasklade.ru
8(800)500-69-51

© Published by permission of the copyright owner - DO NOT COPY or TRANSMIT

Electric Components: Variable Ironing Speed, Microprocessor Control 2/2

REF	DESCRIPTION	GMP 100.25	GMP 120.25	GMP 1400ES	Nr
1	Scheda display Display board Platine display Display-Platine Pletina display		580000031		1
2	Lamierato pannello comandi completo di tastiera Control panel plate complete of keyboard Tôle tableau de contrôle complet de clavier Blech für Schalttafel komplett mit Tastatur Chapa del panel de control con teclado		480000001		1
3	Lamierato pannello comandi Control panel plate Tôle tableau de contrôle Blech für Schalttafel Chapa del panel de control		490000018		1
4	Tastiera Keyboard Panneau de commande adhésif Tastatur Teclado		408000002		1
5	Manopola reostato Rehostat knob Poignée réhostat Rehostat-Drehknopf Botón reostato		5060180		1
6	Disco giallo per pulsante emergenza Yellow sticker for emergency stop button Adhésif jaune pour poussoir urgence Gelber Aufkleber für Not-Aus-Schalter Adhesivo amarillo para pulsador emergencia		027106		1
7	Pulsante emergenza Emergency stop button Poussoir d'urgence Not-Aus Schalter Pulsador de emergencia		480000008		1
8	Cavo di comunicazione Communication cable Câble de communication Kommunikationskabel Cable de comunicación		580000043		1

info@zipnasklade.ru
8(800)500-69-51

© Published by permission of the copyright owner - DO NOT COPY or TRANSMIT

Right Side Door

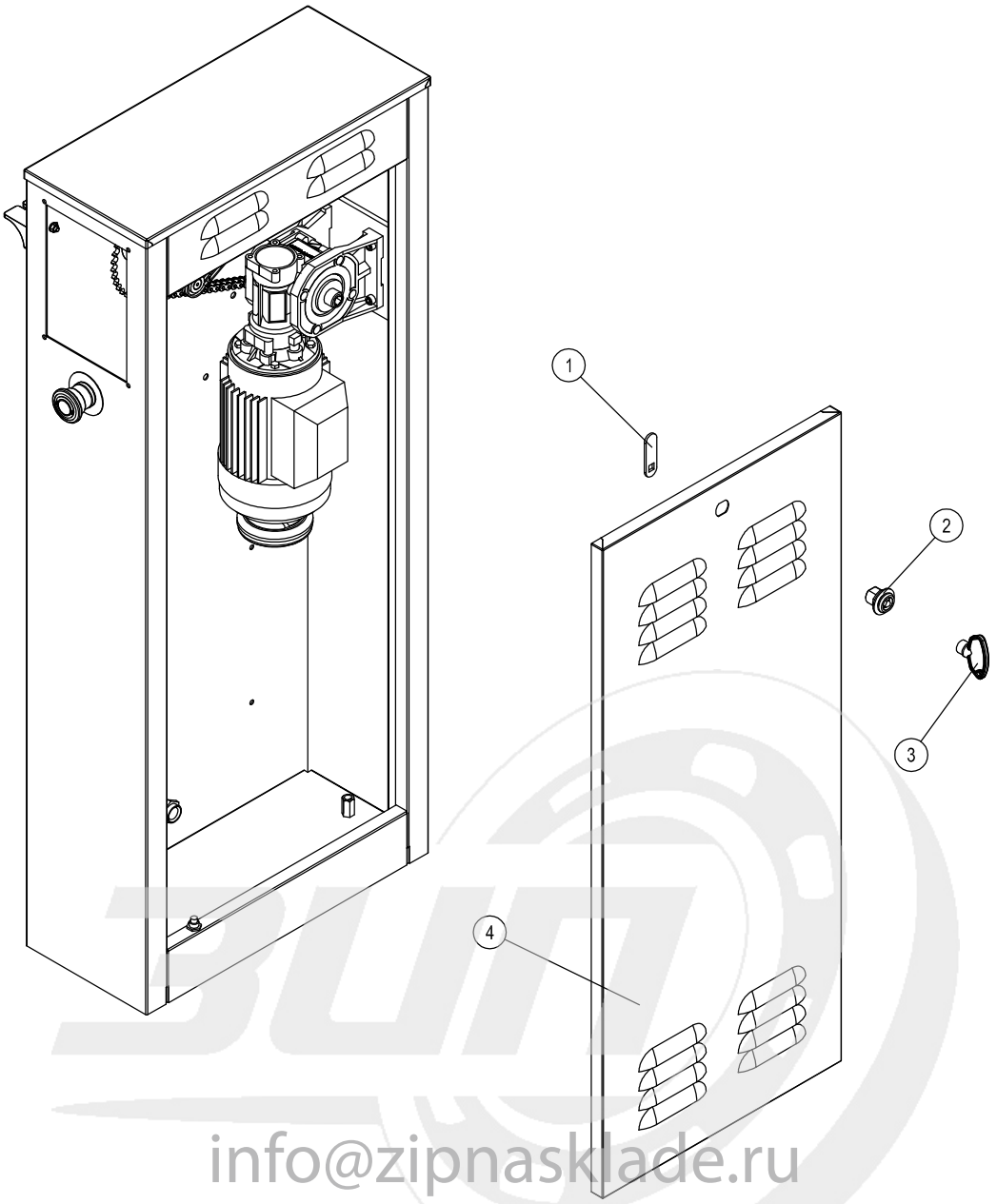

info@zipnasklade.ru
8(800)500-69-51

© Published by permission of the copyright owner - DO NOT COPY or TRANSMIT

Right Side Door

REF	DESCRIPTION	GMP 100.25	GMP 120.25	GMP 1400ES	Nr
1	Levetta serratura Lever for lock Levier verrouillage Hebelverschluss Palanca de la cerradura		33.429B		1
2	Serratura Lock Serrure Schloß Cerradura		33.429		1
3	Chiave per serratura Key for lock Clef pour serrure Schlüssel für Schloß Llave para cerradura		33.429/1		1
4	Porta completa di serratura, grigia Door complete of lock, grey Porte complète avec serrure, grise Tür komplett mit Schloss, grau Tapa completa con cerradura, gris		011006 7035		1

info@zipnasklade.ru
8(800)500-69-51

© Published by permission of the copyright owner - DO NOT COPY or TRANSMIT

Left Side: Generic Components

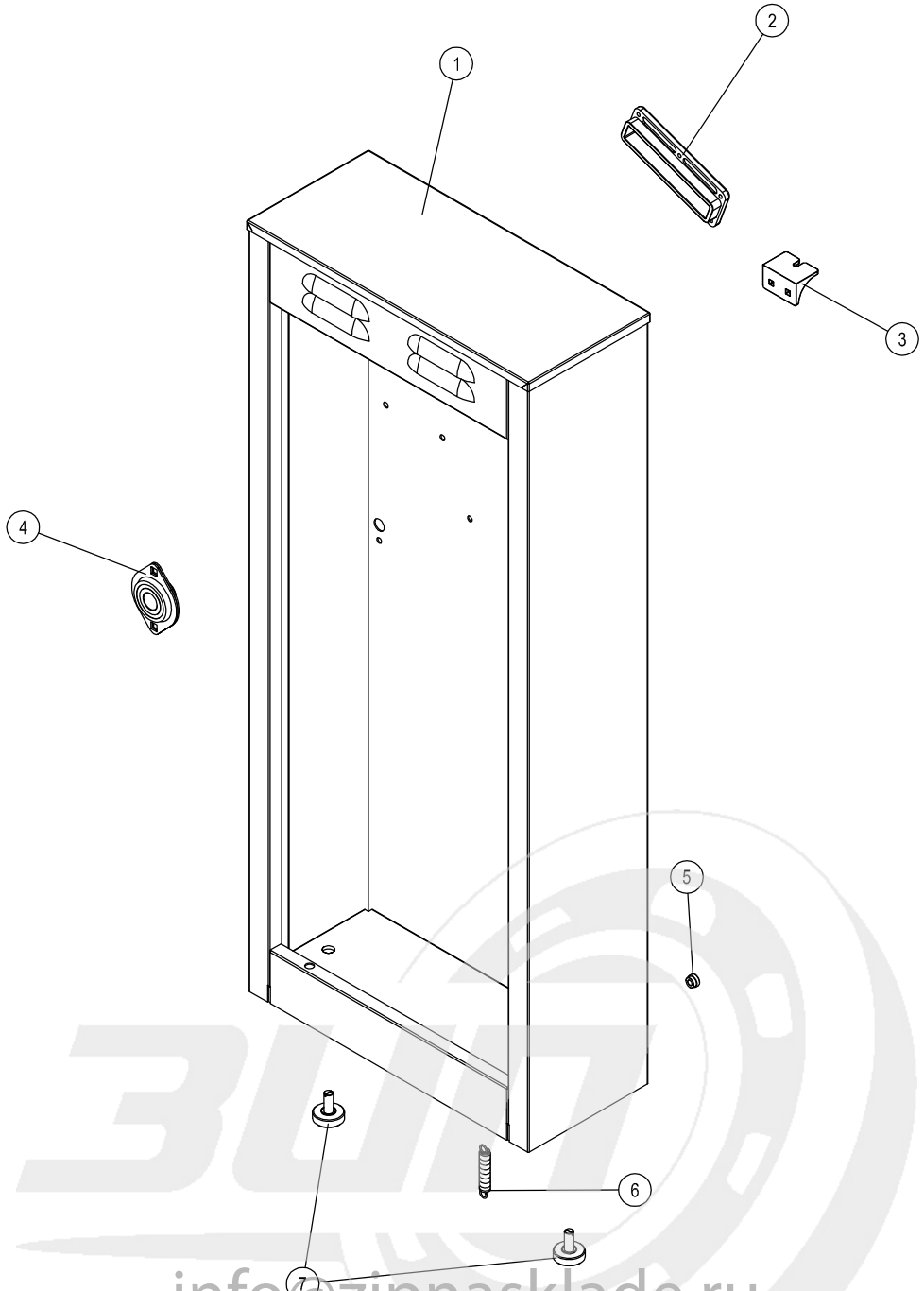

info@zipnasklade.ru
8(800)500-69-51

© Published by permission of the copyright owner - DO NOT COPY or TRANSMIT

Left Side: Generic Components

REF	DESCRIPTION	GMP 100.25	GMP 120.25	GMP 1400ES	Nr
1	Fianco sinistro, grigio Left side plate, grey Côté gauche, gris Linke Seitenwand, grau Costado izquierdo, gris	017002 7035			1
2	Guida di scorrimento Slide guide Guide de glissement Rollschiene Guía de deslizamiento	509000156-01 Service bulletin			1
3	Supporto tavola Table support Support table Holzbretthalterung Soporte tabla	609Z00396-01			1
4	Supporto con cuscinetto Support with bearing Support avec coussinet Halterung mit Lager Soporte con cojinete	SBPFL204			1
	Supporto con cuscinetto, modelli ".A" Support with bearing, ".A" models Support avec coussinet, modèles ".A" Halterung mit Lager, ".A" Modelle Soporte con cojinete, modelos ".A"	027034			1
5	Boccola flangiata per pedaliera Pedal bushing Bague pédalier Pedalbüchse Anillo para pedal	011034			1
6	Molla pedaliera Pedal spring Ressort pédalier Pedal-Feder Resorte pedal	011044			1
7	Piedino regolabile Adjustable foot Petit pied reglable Regulierbar Fuß Pie ajustable	017PIEREG35			2

info@zipnasklade.ru
8(800)500-69-51

© Published by permission of the copyright owner - DO NOT COPY or TRANSMIT

Left Side: Drive Components

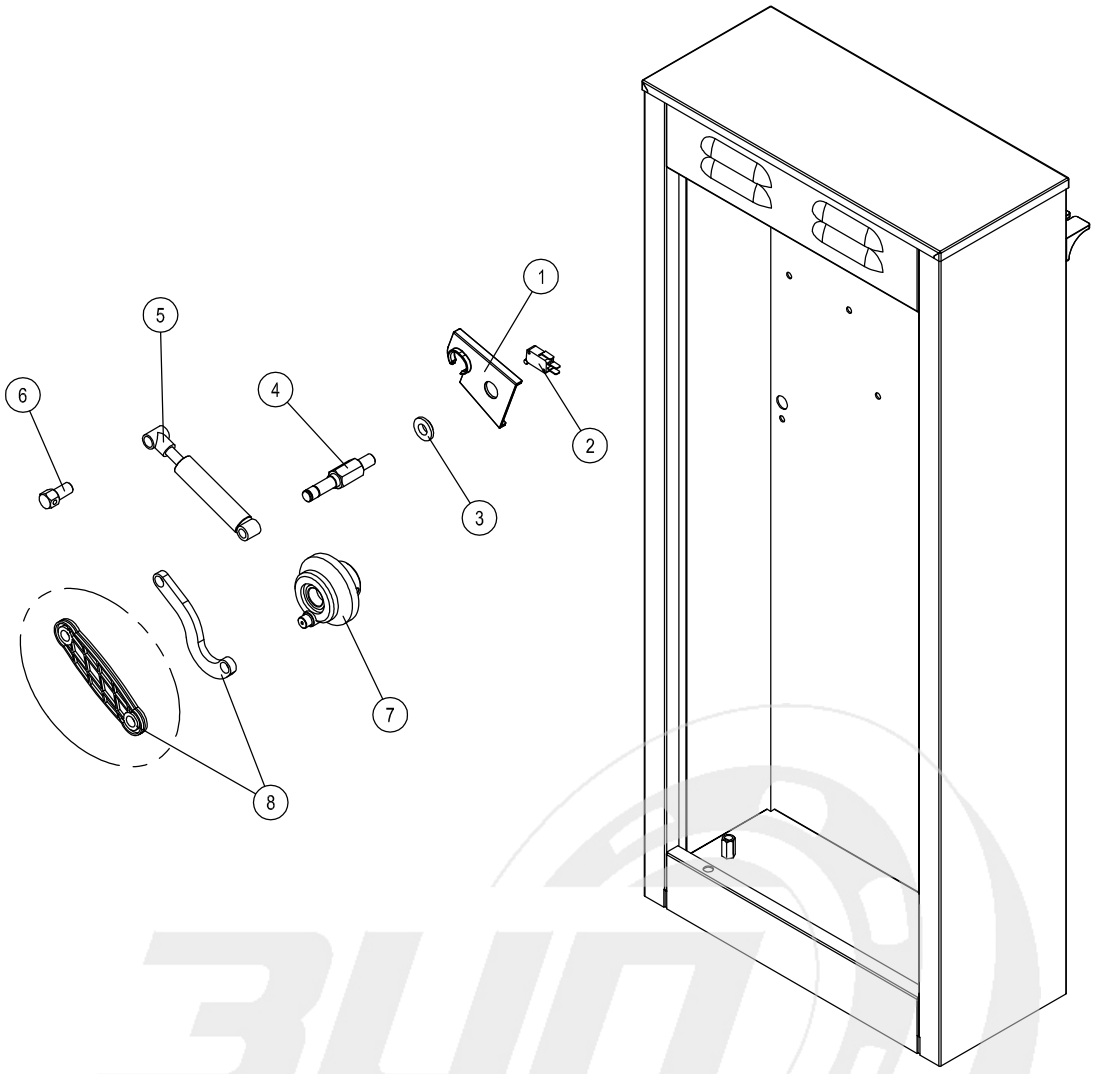

info@zipnasklade.ru
8(800)500-69-51

© Published by permission of the copyright owner - DO NOT COPY or TRANSMIT

Left Side: Drive Components

REF	DESCRIPTION	GMP 100.25	GMP 120.25	GMP 1400ES	Nr
1	Piastrina microinterruttore conca plate for microswitch Plaque pour micro-interrupteur presse Plättchen für Heizmulden-Mikroschalter Plaquita para microinterruptor cuenco	509000155-01 Service bulletin			1
2	Microinterruttore Microswitch Micro-interrupteur Mikroschalter Microinterruptor	CRO831613ER24			1
3	Distanziale per supporto conca Spacer for chest support Epaisseur pour support cuvette Distanzstück für Heizmuldenhalterung Espesor para soporte del cubeta	509Z00160-01			1
4	Perno esagonale per molla a gas anteriore Front hexagonal pin for gas spring Tourillon hexagonal antérieur pour ressort à gaz Vorderer Sechskantbolzen für Gasfeder Perno hexagonal frontal para resorte a gas	509Z00163-01			1
5	Molla a gas Gas spring Ressort a gaz Gasfeder Resorte a gas	221017036	221017036	221017036 TENAX models: 221017044	1
6	Bloccaggio molla a gas Lock for gas spring Blocage ressort a gaz Gasfeder-Arretierung Bloqueo resorte a gas	011020Z			1
7	Dispositivo di movimentazione sinistro Left shafting device Dispositif de mouvement gauche Linke Antriebvorrichtung Dispositivo de transmisión izquierdo	490100011			1
	Dispositivo di movimentazione sinistro, modelli “.A” Left shafting device, “.A” models Dispositif de mouvement gauche, modèles “.A” Linke Antriebvorrichtung, “.A” Modelle Dispositivo de transmisión izquierdo, modelos “.A”	590000056			1
8	Asta rinvio per conca Connecting rod Barre renvoi pour presse Vorgelegestange für Mulde Barra transmisión para cuenco	409000095			1
	Asta rinvio per conca, modelli “.A” Connecting rod, “.A” models Barre renvoi pour presse, modèles “.A” Vorgelegestange für Mulde, “.A” Modelle Barra transmisión para cuenco, modelos “.A”	509Z00131			1

info@zipnasklade.ru
8(800)500-69-51

© Published by permission of the copyright owner - DO NOT COPY or TRANSMIT

Left Side: Exhaust System (Optional) 1/2

Models Through SRN 2013100600016

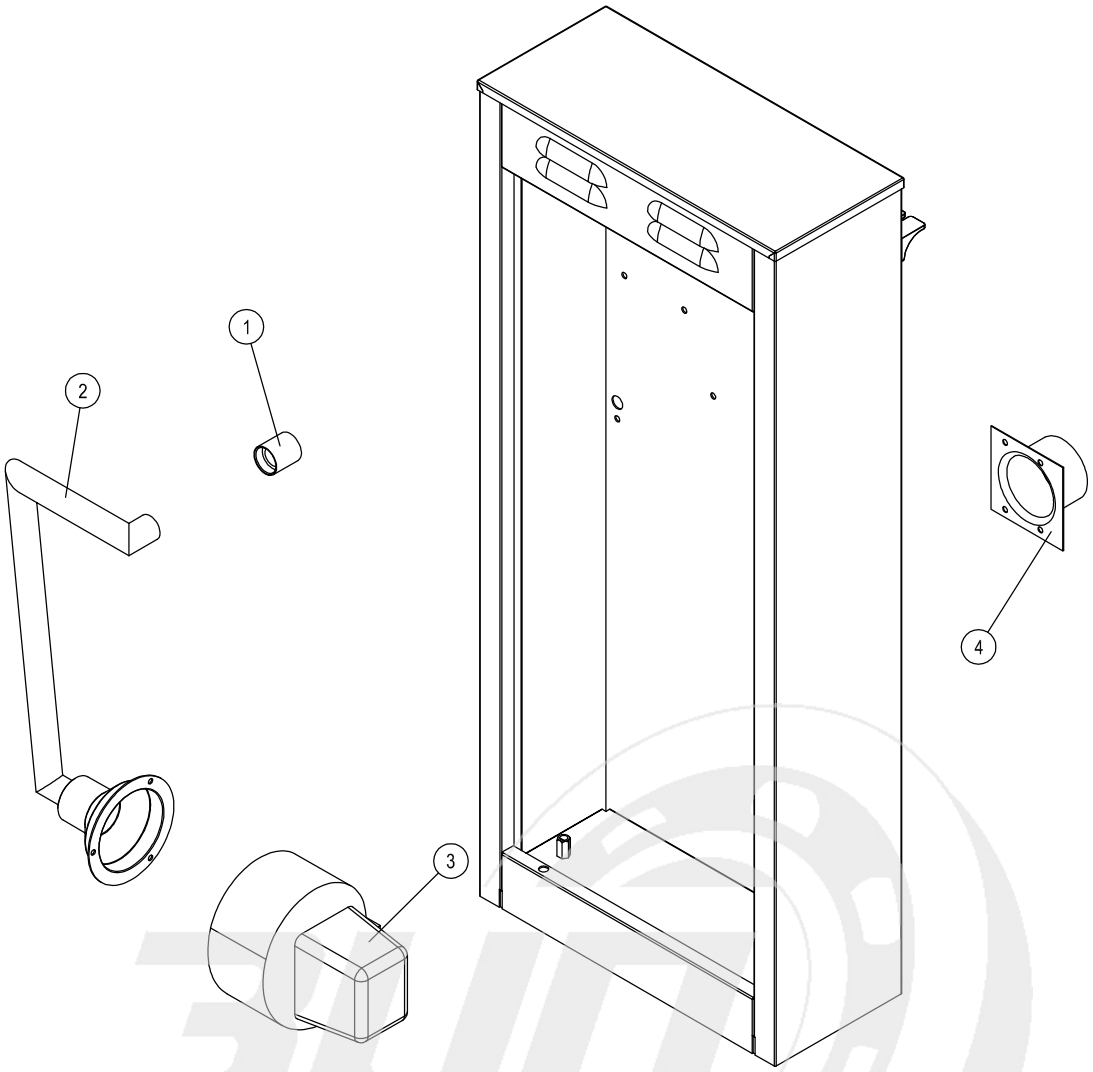

info@zipnasklade.ru
8(800)500-69-51

© Published by permission of the copyright owner - DO NOT COPY or TRANSMIT

Left Side: Exhaust System (Optional) 1/2

Models Through SRN 2013100600016

REF	DESCRIPTION	GMP 100.25	GMP 120.25	GMP 1400ES	Nr
1	Distanziale Spacer Epaisseur Distanzstück Espesor	509000169-01			1
2	Collettore aspiratore Manifold for fan Collecteur pour l'aspiration Sammelrohr für Absaugung Colector aspirador	590V70071-01 Service bulletin			1
3	Aspiratore vapori Exhaust system Groupe aspiration Saugeinheit Grupo de aspiratión	033012 Service bulletin			1
4	Bocchettone per gruppo aspirazione Union for exhaust system Tubulare pour groupe aspiration Rohrstutzen für Absaugungsystem Boca para grupo de aspiratión	609Z00279-01			1

info@zipnasklade.ru
8(800)500-69-51

© Published by permission of the copyright owner - DO NOT COPY or TRANSMIT

Left Side: Exhaust System (Optional) 2/2

Models Starting SRN 2013100600017

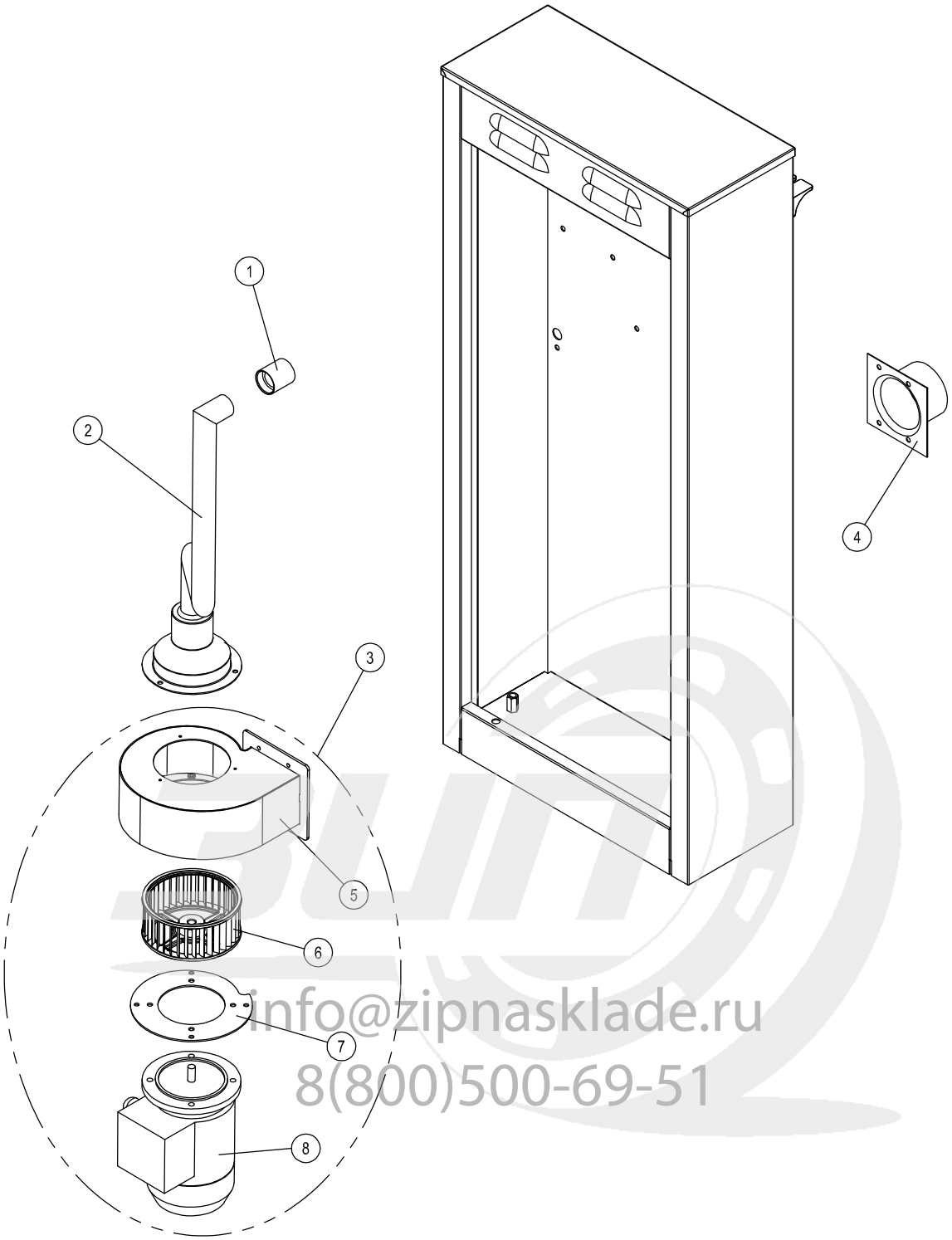

info@zipnasklade.ru
8(800)500-69-51

© Published by permission of the copyright owner - DO NOT COPY or TRANSMIT

Left Side: Exhaust System (Optional) 2/2

Models Starting SRN 2013100600017

REF	DESCRIPTION	GMP 100.25	GMP 120.25	GMP 1400ES	Nr
1	Distanziale Spacer Epaisseur Distanzstück Espesor		509000169-01		1
2	Collettore aspiratore Manifold for fan Collecteur pour l'aspiration Sammelrohr für Absaugung Colector aspirador		590V70071-02		1
3	Gruppo di aspirazione completo Exhaust system assy Groupe aspiration Saugeinheit Grupo de aspiratión		580000039-02		1
4	Bocchettone per gruppo aspirazione Union for exhaust system Tubulare pour groupe aspiration Rohrstutzen für Absaugungsystem Boca para grupo de aspiratión		609Z00279-01		1
5	Chiocciola per aspirazione vapori Fan housing Limaçon siège ventilateur Absaugergehäuse Tapa para aspiración vapores		590V70074-01		1
6	Ventola 120x52x36 Fan 120x52x36 Ventilateur 120x52x36 Gebläselüfter 120x52x36 Ventilador 120x52x36		509000185-01		1
7	Flangia per aspirazione vapori Flange for exhaust system Bride pour groupe aspiration Flansch für Absaugungsystem Brida para grupo de aspiratión		509000184-05		1
8	Motore per aspirazione vapori Motor for steam suction Moteur pour aspiration vapeurs Motor für Dampfabsaugung Motor para aspiración vapores		5060271		1

info@zipnasklade.ru
8(800)500-69-51

© Published by permission of the copyright owner - DO NOT COPY or TRANSMIT

Left Side Door

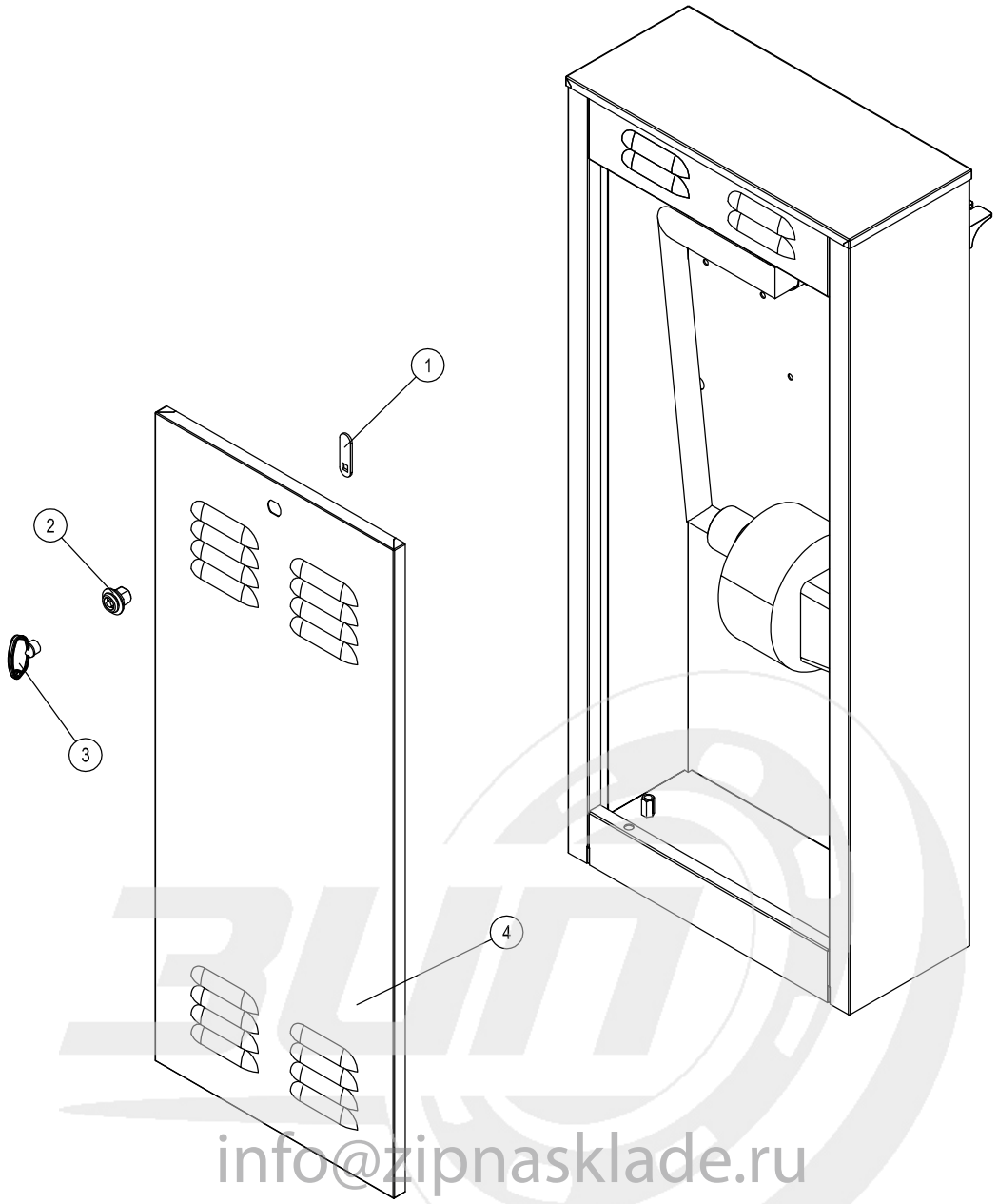

info@zipnasklade.ru
8(800)500-69-51

© Published by permission of the copyright owner - DO NOT COPY or TRANSMIT

Left Side Door

REF	DESCRIPTION	GMP 100.25	GMP 120.25	GMP 1400ES	Nr
1	Levetta serratura Lever for lock Levier verrouillage Hebelverschluss Palanca de la cerradura		33.429B		1
2	Serratura Lock Serrure Schloß Cerradura		33.429		1
3	Chiave per serratura Key for lock Clef pour serrure Schlüssel für Schloß Llave para cerradura		33.429/1		1
4	Porta completa di serratura, grigia Door complete of lock, grey Porte complète avec serrure, grise Tür komplett mit Schloss, grau Tapa completa con cerradura, gris		011006 7035		1

info@zipnasklade.ru
8(800)500-69-51

© Published by permission of the copyright owner - DO NOT COPY or TRANSMIT

Detaching Linen System (Optional)

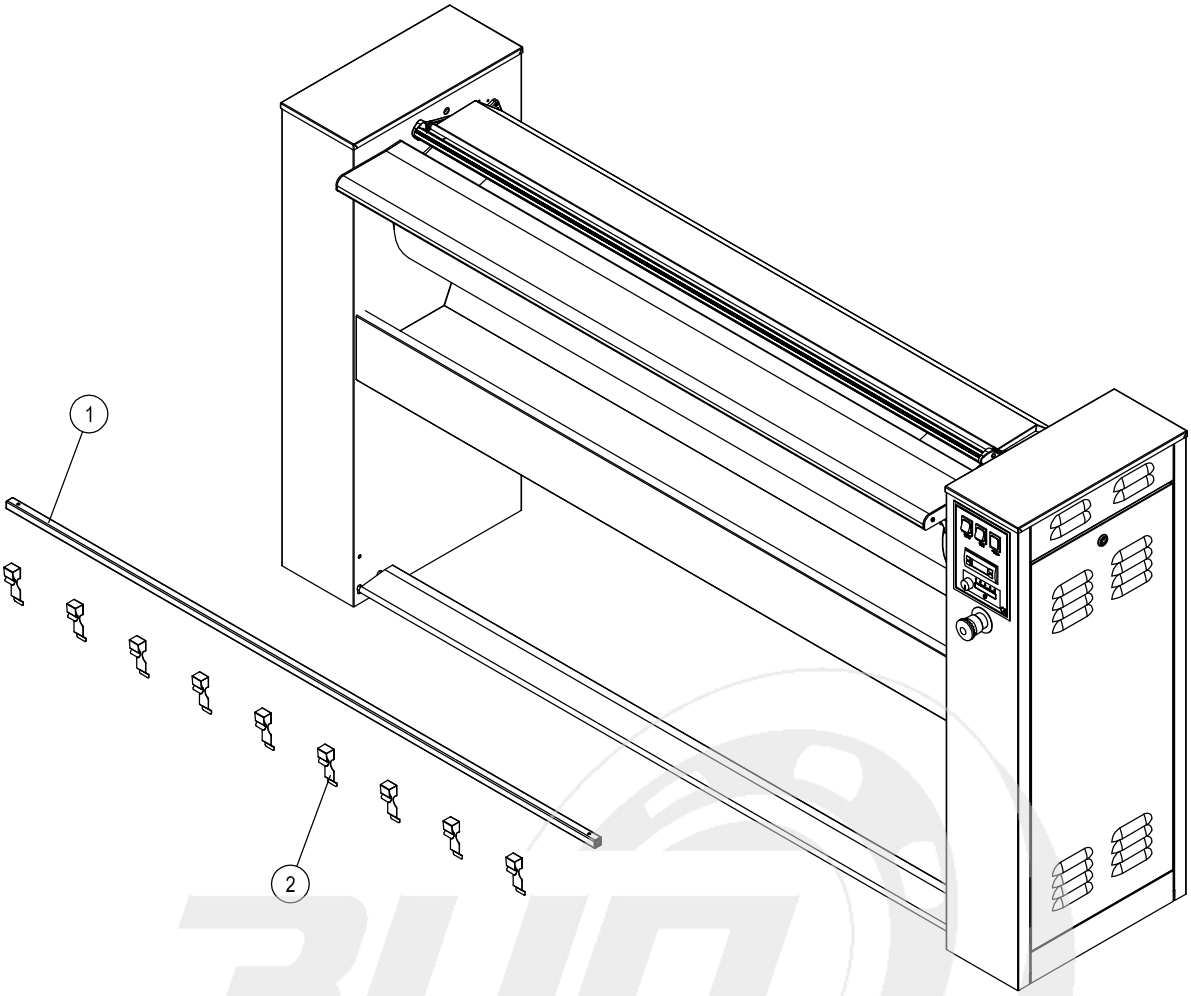

info@zipnasklade.ru
8(800)500-69-51

© Published by permission of the copyright owner - DO NOT COPY or TRANSMIT

Detaching Linen System (Optional)

REF	DESCRIPTION	GMP 100.25	GMP 120.25	GMP 1400ES	Nr
1	Tubo staccabiancheria Detaching linen pipe Tube pour détacher le linge Wäscheabstreifsrohr Tubo para despegar la ropa	028019C	029019C	017019C	1
2	Forcella staccabiancheria Detaching linen fork Fourche pour détacher le linge Wäscheabstreifer Horquilla para despegar la ropa	609000169-01	609000169-01	609000169-01	7 8 9

info@zipnasklade.ru
8(800)500-69-51

© Published by permission of the copyright owner - DO NOT COPY or TRANSMIT

info@zipnasklade.ru
8(800)500-69-51