Mod.	From serial no. A partir máq. nº
RMS613/RMG613	2.330.379
REM033/RMG033	2.360.000

Parts Handbook for Washers
Manual de recambios para lavadoras
Notice Vues Eclatées pour laveuses

RMS613 / RMG613
REM033 / RMG033

info@zipnasklade.ru
8(800)500-69-51

GIRBAU, S.A.
Crta de Manlleu, km. 1
08500 VIC (Barcelona) • SPAIN
Tel. 34 93 8861100
Fax 34 93 8860785
girbau@girbau.es
www.girbau.com

USA, CANADA:

CONTINENTAL GIRBAU Inc.
2500 State Road 44
WI 54904 Oshkosh • USA
Tel. 1(920) 231-8222
Fax 1(920) 231-4666
info@cont-girbau.com
www.cont-girbau.com

Parts Handbook
Manual de recambios
Vues Eclatées

RMS613/RMG613
REM033/RMG033

Cod. 598300 Alt.02
Rev. 02/0817

NOTES TO USE PARTS LIST

Sheets no. 1, 2, 3, 4, 5, 10, 13, 16:
Are common for all versions.

Sheets no. 6, 11:
Logi Control & Logi Pro

Sheets no. 6, 12:
Coin Control

Sheet no. 7:
Logi Control, Logi Pro & Coin Control with high temperature valve

Sheet no. 14:
Electric heating

Sheet no. 15:
Steam heating

Sheet no. 8:
REM033 Coin Control

Sheet no. 9:
REM033 Coin Control with high temperature valve

ACLARACIONES PARA EL USO DEL MANUAL DE RECAMBIOS

Hojas nº 1,2,3,4,5,10,13,16:
Son comunes a todas las variantes.

Hojas nº 6, 11:
Logi Control y Logi Pro

Hojas nº 6, 12:
Coin Control

Hoja nº 7:
Logi Control, Logi Pro y Coin Control con válvula alta temperatura

Hoja nº 14:
Calefacción eléctrica

Hoja nº 15:
Calefacción a vapor

Hoja nº 8:
REM033 Coin Control

Hoja nº 9:
REM033 Coin Control con válvula alta temperatura

NOTES UTILISATION VUES ECLATEES

Feuilles no.1,2,3,4,5,10,13,16:
Sont communes à toutes les versions.

Feuilles no. 6, 11:
Logi Control et Logi Pro

Feuilles no. 6, 12:
Coin Control

Feuille no. 7:
Logi Control, Logi Pro et Coin Control avec vanne haute temperature

Feuille no. 14:
Chauffage électrique

Feuille no. 15:
Chauffage à vapeur

Feuille no. 8:
REM033 Coin Control

Feuille no. 9:
REM033 Coin Control avec vanne haute température

info@zipnasklade.ru
8(800)500-69-51

VERY IMPORTANT:
Before ordering parts be sure they have not been modified. Check it on modification sheet, after the corresponding sheet.

MUY IMPORTANTE:
Al pedir una pieza cerciorarse antes de que la misma no ha sido modificada. Si lo hubiese sido, estaría situada como hoja de modificaciones, detrás de la hoja correspondiente.

TRES IMPORTANT:
Avant de commander une pièce, s'assurer qu'elle n'a pas été modifiée. Le vérifier sur feuille de modifications, derrière la feuille correspondante.

RMS613
Pag. 01

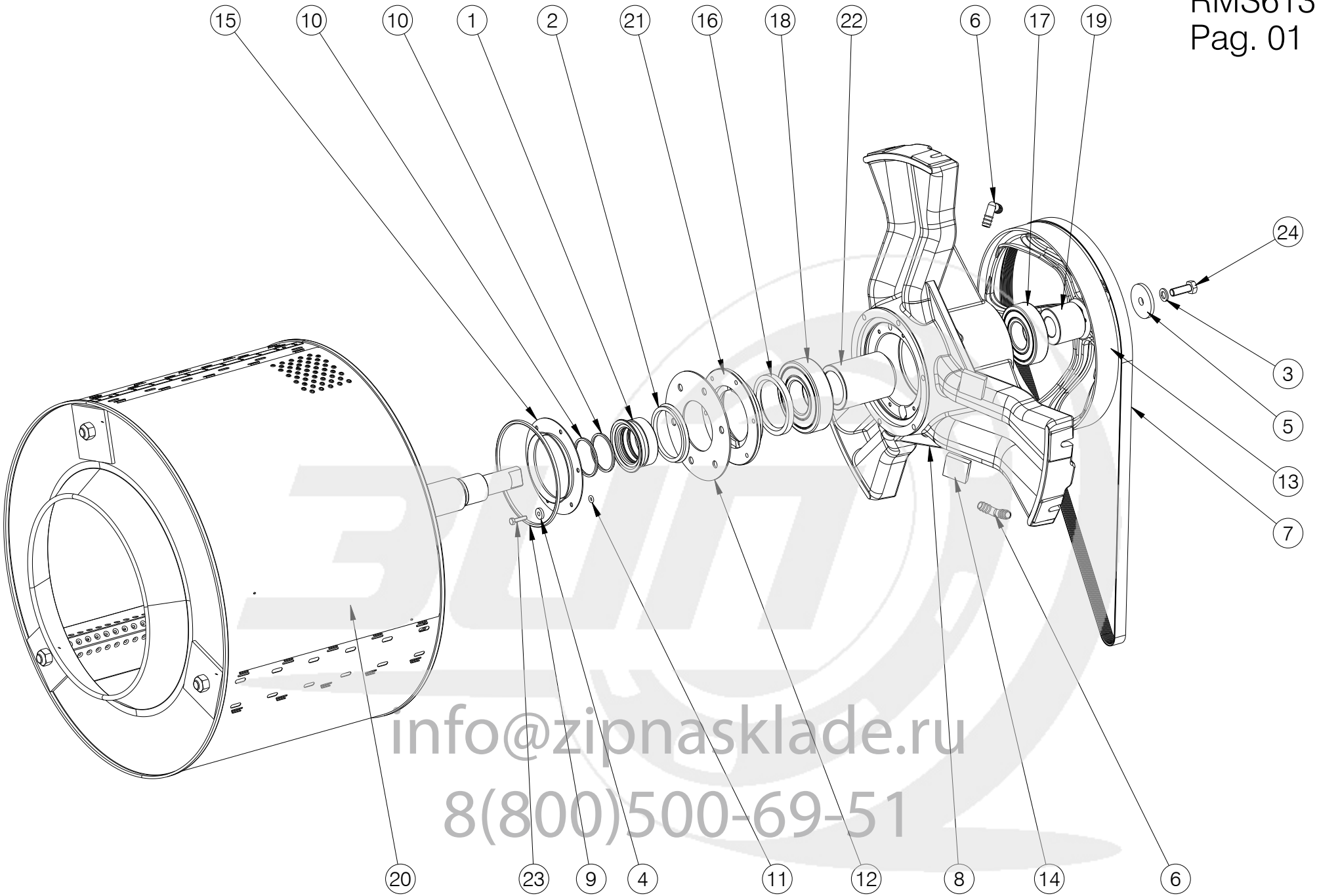

info@zipnasklade.ru
8(800)500-69-51

Nº	REF	DENOMINATION	DENOMINACIÓN	DENOMINATION
1	428250	SEAL RING	ANILLO RETENES	BAGUE RESERVES
2	343723	RING V-RING V-80A VITON (FOR INOX BASKET PLATE)	ANILLO V-RING V-80A VITON (PARA PLATO TAMBOR INOX)	BAGUE V-RING V-80A VITON (POUR PLAQUE INOX TAMBOUR)
	342816	RING V-RING V- 80 A NBR510 (FOR PAINTED BASKET PLATE)	ANILLO V-RING V- 80 A NBR510 (PARA PLATO TAMBOR PINTADO)	BAGUE V-RING V- 80 A NBR510 (POUR PLAQUE PEINTE TAMBOUR)
3	149823	GROWER WASHER A12 DIN127 BICR.	ARAN.GROWER A12 DIN127 B.TRI.	RONDELLE GROWER A12 DIN127
4	422220	WASHER D18XD6.5X4	ARANDELA 18X6.5X4 INOX	RONDELLE D18XD6.5X4
5	238048	WASHER D57XD13X6	ARANDELA 57X13X6 TRIVALEN.	RONDELLE D57XD13X6
6	193904	HOSE ELBOW 3/8" RE. 46602	CODO MANGUERA 3/8" REF.46602	COUDE TUYAU 3/8" REF. 46602
7	524025	ESTR.BELT 9PK1651+-6	CORREA ESTR.9PJ1651±6	COURROIE ESTR. 9PK1651+-6
8	427203	BEARING BOX	ESTRELLA CAJA COJINETES	BOITE ROULEMENTS
9	340927	TORIC GASKET 166X178X6 NBR	JUNTA TORICA 166X178X6 NBR	JOINT TORIQUE 166X178X6 NBR
10	340935	TORIC GASKET 57X65X4 NBR70	JUNTA TORICA 57X65X4 NBR70	JOINT TORIQUE 57X65X4 NBR70
11	181321	TORIC GASKET 6X12X3	JUNTA TORICA 6X12X3	JOINT TORIQUE 6X12X3
12	428276	PLATE V-RING	PLATINA V-RING	PLATINE V-RING
13	318121	DRUM PULLEY	POLEA TAMBOR	POULIE TAMBOUR
14	431205	PRESSOSTAT HOSE PROTECTION	PROTECCION TUBO PRESOSTATO	PROTECTION TUBE PRESSOSTAT
15	428284	PROTECTIOM V-RING	PROTECCION V-RING	PROTECTION V-RING
16	121897	SEAL 78X100X10 BA	RETEN 78X100X10 DIN 3760-A NBR	RESERVE 78X100X10 BA
17	128686	BEARING 6309 ZZ	RODAMIENTO 6309 ZZ	ROULEMENT 6309 ZZ
18	340901	BEARING 6311-C-2HRS	RODAMIENTO 6311-C-2HRS	ROULEMENT 6311-C-2HRS
19	340844	DRUM PULLEY SPACER	SEPARADOR POLEA TAMBOR	SEPARATEUR POULIE TAMBOUR
20	444422	BASKET (FOR PAINTED BASKET PLATE)	TAMBOR (PARA PLATO TAMBOR PINTADO)	TAMBOUR (POUR PLAQUE PEINTE TAMBOUR)
	428458	DRUM (FOR INOX BASKET PLATE) (SPARE PARTS ONLY)	TAMBOR (PARA PLATO TAMBOR INOX) (SOLO RECAMBIOS)	TAMBOUR (POUR PLAQUE INOX TAMBOUR) (SEULEMENT PIECES DETACHEES)
21	428268	SEAL-HOLDER COVER	TAPA PORTA-RETEN	COUVERCLE PORTE-RESERVE
22	340836	BEARING END-PIECE	TOPE COJINETES	ARRET ROULEMENTS
23	144915	INOX HEX SCREW DIN933 M 6X25	TOR.EX.DIN933INOX A2-70 M 6X25	VIS HEX INOX DIN933 M 6X25
24	176883	BIC.HEX SCREW DIN933-8 M12X35	TOR.EX.DIN933-8.8 B.TRI.M12X35	VIS HEX DIN933-8,8 BICR.M12X35

info@zipnasklade.ru
8(800)500-69-51

RMS613
Pag. 02

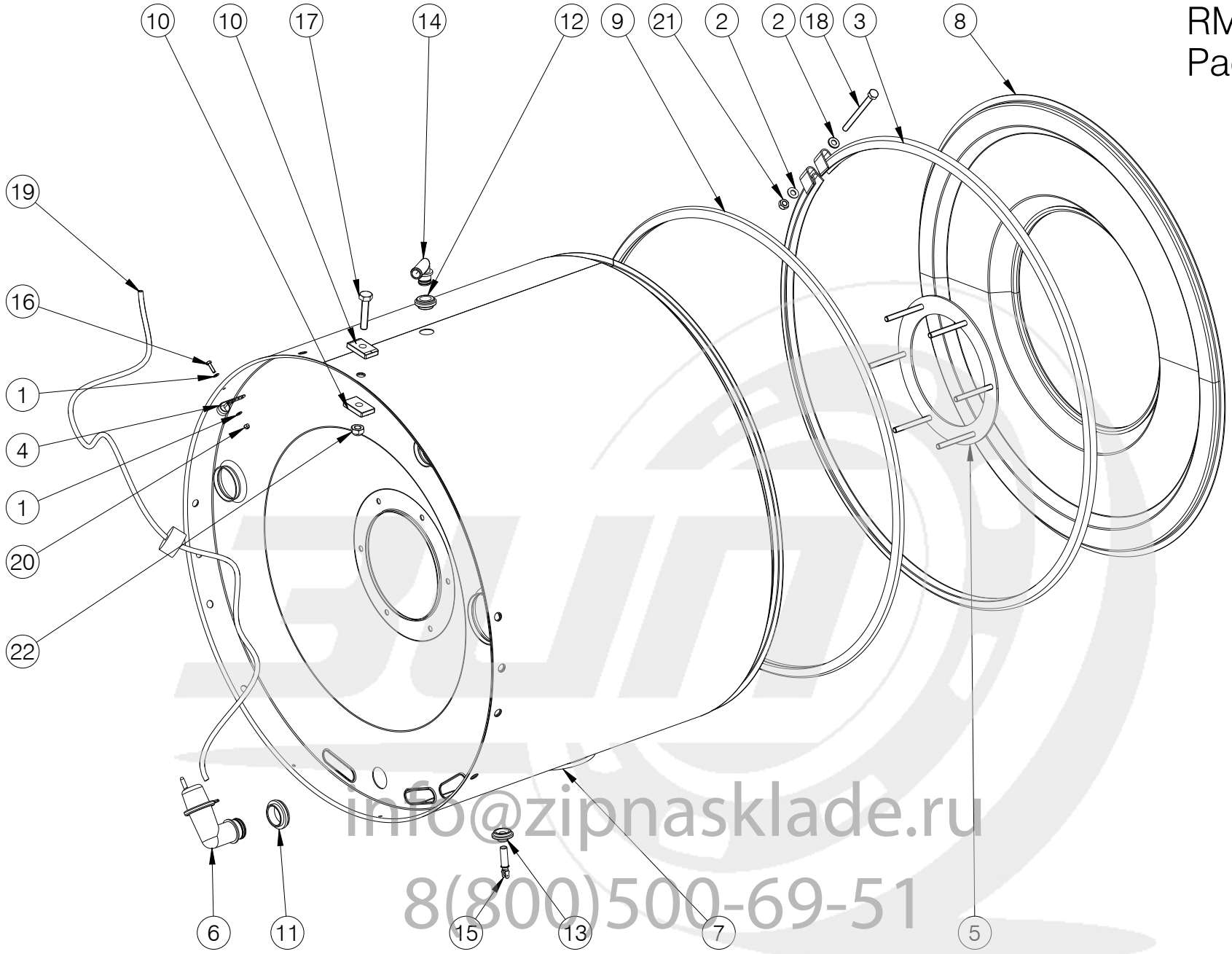

info@zipnasklade.ru
8(800)500-69-51

Nº	REF	DENOMINATION	DENOMINACIÓN	DENOMINATION
1	149476	BICR.WASHER B DIN125-ST 4,3	ARAN.B DIN125-ST B.TRI. 4,3	RONDELLE B DIN125-ST BICR.4,3
2	149518	BICR.WASHER B DIN125-ST 8,4	ARAN.B DIN125-ST B.TRI. 8,4	RONDELLE.B DIN125-ST BICR.8,4
3	430298	OUTER-DRUM FIXING RING	ARO FIJACION ENVOLVENTE	BAGUE FIXATION CUVE
4	140418	CLAMP UNEX REF 1201	BRIDA UNEX 1201	BRIDE UNEX REF 1201
5	431577	OUTER-DRUM PLATE SET	CONJUNTO PLATINA ENVOLVENTE	ENSEMBLE PLATINE CUVE
6	320382	PRESSURE TRANSMITT INTAKE BODY	CUERPO TOMA PRESOSTATO	CORPS PRISE PRESSOSTAT
7	428482	OUTER	ENVOLVENTE	CUVE
8	549220	OUTER DRUM FRONT PANEL	FRONTAL ENVOLVENTE	FRONTAL CUVE
9	340638	HOUSING OUTER-DRUM FRONT	JUNTA FRONTAL ENVOLVENTE	JOINT FRONTAL CUVE
10	422329	HANDRAIL 43X25X8	PASAMANO 43X25X8	PASSEMAIN 43X25X8
11	320036	PRESSURE T.BODY SHEATH-LODGING	PASAMUROS CUERPO PRESOSTATO	LOGEMENT CORPS PRESSOSTAT
12	338863	VAPOR OUTLET SHEATH-LODGING	PASAMUROS DESVAPORIZADOR	LOGEMENT SORTIE CONDENSATS
13	256149	SENSOR SHEATH LODGING	PASAMUROS SENSOR	LOGEMENT SENSEUR
14	338871	VAPOR OUTLET RACCORD	RACOR DESVAPORIZADOR	RACCORD SORTIE CONDENSATS
15	193862	NTC RESISTANCE	RESISTENCIA NTC	RESISTANCE NTC
16	146266	BICR.HEX SCREW DIN933-8 M-4X15	TOR.EX.DIN933-4.8 B.TRI.M 4X15	VIS HEX BICR.DIN933-8.8 M-4X15
17	186528	HEX SCREW DIN 933 8,8 M10x50 TRIVALENT	TORNILLO HEXAGONAL DIN 933 8,8 M10x50 TR	VIS HEXAGONALE DIN 933 8,8 M10x50 TRIVAL
18	146464	BICR.HEX SCREW DIN933-8 M8X100	TOR.EX.DIN933-8.8 B.TRI.M8X100	VIS HEX BICR.DIN933-8 M 8X100
19	428672	PRESSURE TRANSMITTER HOSE	TUBO TRANSMISOR PRESION	TUYAU PRESSOSTAT
20	132043	SELF-LOCKING NUT DIN985-8 B.TRI.M 4	TUER.AUTOBL.DIN985-8 B.TRI.M 4	ECROU AUTOBLOCANT DIN985-8 B.TRI.M 4
21	164285	SELF-LOCKING NUT DIN985-8 B.TRI.M8	TUER.AUTOBL.DIN985-8 B.TRI.M8	ECROU AUTOBLOCANT DIN985-8 B.TRI.M8
22	150649	SELF-LOCKING NUT DIN985-8 B.TRI.M10	TUER.AUTOB.DIN985-8 B.TRI.M10	ECROU AUTOBLOCANT DIN985-8 B.TRI.M10

info@zipnasklade.ru
8(800)500-69-51

RMS613
Pag. 03

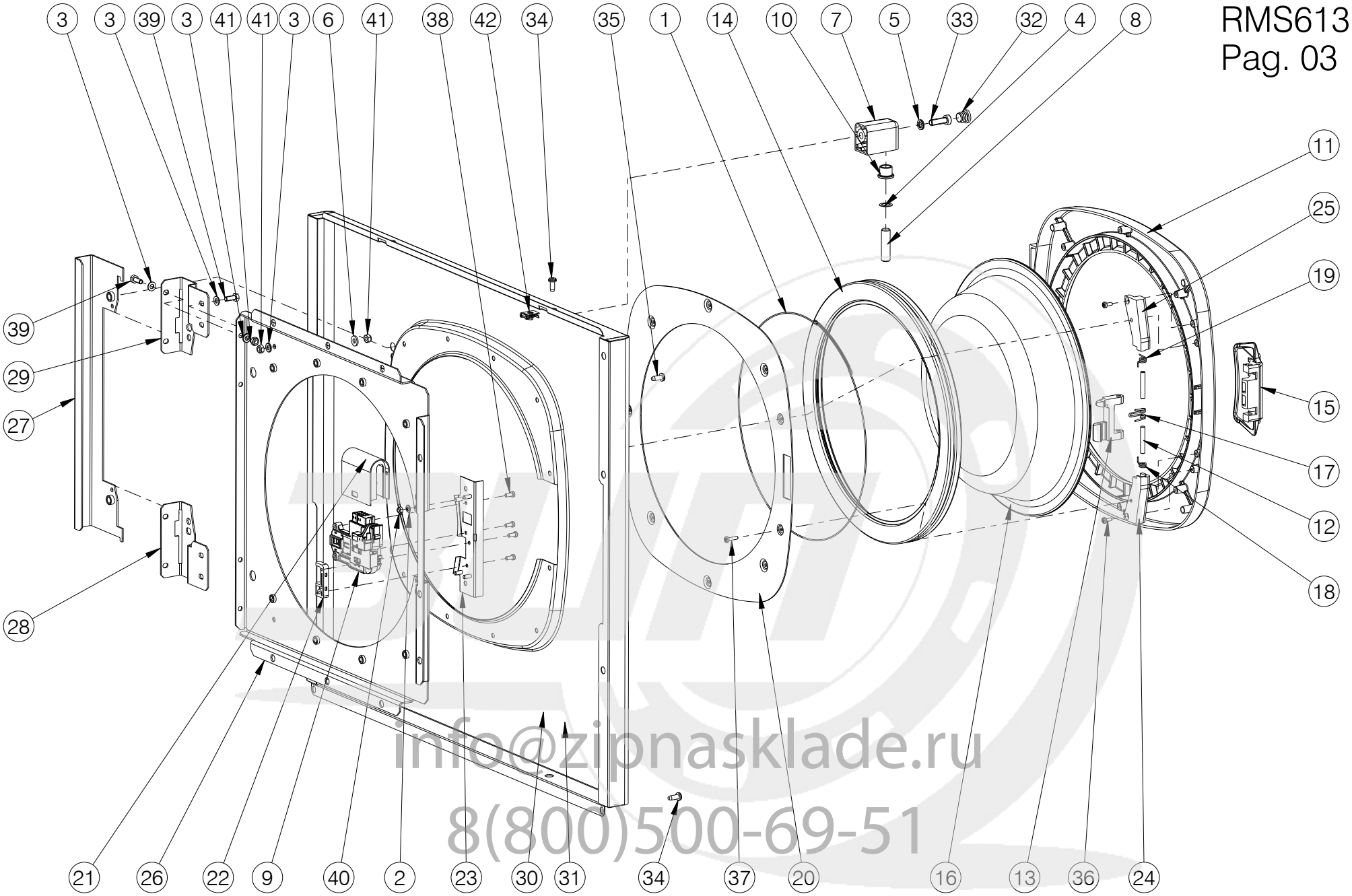

info@zipnasklade.ru
8(800)500-69-51

Nº	REF	DENOMINATION	DENOMINACIÓN	DENOMINATION
1	343137	WASHER D318XD1,5 SPRING	ABRAZ.ALAMBRE D318XD1,5 MUELLE	RONDELLE D318XD1,5 RESSORT
2	149534	BICR.WASHER B DIN125-ST 5,3	ARAN.B DIN125-ST BICR. 5,3	RONDELLE B BICR.DIN125-ST 5,3
3	149526	BICR.WASHER B DIN125-ST 6,4	ARAN.B DIN125-ST B.TRI. 6,4	RONDELLE B DIN125-ST BICR.6,4
4	184200	ADJ. WASHER PS12X18X0,2	ARAN.AJUSTE PS12X18X0,2 DIN988	RONDELLE REGLAGE PS12X18X0,2
5	540039	NORD-LOCK WASHER NL 8 D.PROT.	ARAN.NORD-LOCK NL 8 D.PROT.	RONDELLE NORD-LOCK NL 8 D.PROT.
6	432872	WASHER 14X6.4X2	ARANDELA 14X6.4X2 INOX	RONDELLE 14X6.4X2
7	432054	HINGE	BISAGRA	CHARNIERE
8	261156	DOOR BOLT	BULON ESCOTILLA	BOULON HUBLOT
9	333302	LOCKING BITRON BP P/5 DL-S1	CIERRE BITRON BP P/5 DL-S1 *	FERMETURE BITRON BP P/5 DL-S1
10	128827	SELFOIL SLEEVE B11B12-17-15/22	COJ. SELFOIL B11B12-17-15/22-3	FRETTE SELFOIL B11B12-17-15/22
11	432062	DOOR BODY	CUERPO ESCOTILLA	CORPS HUBLOT
12	427088	HANDLE SHAFT	EJE MANETA	AXE POIGNEE
13	339614	LOCK HOOK	GANCHO CIERRE	CROCHET FERMETURE
14	563353	DOOR GASKET 65SHA	JUNTA ESCOTILLA 65SHA	JOINT DE HUBLOT 65SHA
	359810	DOOR GASKET 70SHA (SPARE PARTS ONLY)	JUNTA ESCOTILLA 70SHA (SOLO RECAMBIOS)	JUNTA ESCOTILLA 70SHA (SEULEMENT PIECES DETACHEES)
15	339457	LOCK HANDLE	MANETA CIERRE	POIGNEE FERMETURE
16	340547	SPYHOLE	MIRILLA	VITRE
17	350462	HOOK SPRING	MUELLE GANCHO	RESSORT CROCHET
18	339978	HANDLE SPRING	MUELLE MANETA	RESSORT POIGNEE
19	339986	HANDLE SPRING	MUELLE MANETA	RESSORT POIGNEE
20	587261	GLASS-HOLDER	PORTA-MIRILLA	PORTE-VITRE
21	333070	LOCKING PROTECTION	PROTECCION CIERRE	PROTECTION FERMETURE
22	430843	FRONT COVER REINFORT	REFUERZO TAPA FRONTAL	RENFORT COUVERCLE FRONTALE
23	549329	LOCK BRACKET	SOPORTE CIERRE	SUPPORT FERMETURE
24	409086	HANDLE BRACKET	SOPORTE MANETA	SUPPORT HUBLOT
25	409094	HANDLE BRACKET	SOPORTE MANETA	SUPPORT POIGNEE
26	549246	DOOR BRACKET	SOPORTE PUERTA	SUPPORT PORTE
27	549287	HINGE NUT BRACKET	SOPORTE TUERCAS BISAGRAS	SUPPORT ECROU CHARNIÈRE

info@zipnasklade.ru
8(800)500-69-51

Nº	REF	DENOMINATION	DENOMINACIÓN	DENOMINATION
28	549261	LOWER DOOR BRACKET SUPPLEMENT	SUPLEMENTO SOPORTE PUERTA INF.	SUPPLÉMENT SUPPORT PORTE INF.
29	549253	HIGHER DOOR BRACKET SUPPLEMENT	SUPLEMENTO SOPORTE PUERTA SUP.	SUPPLÉMENT SUPPORT PORTE SUP.
30	587402	FRONT COVER (INOX)	TAPA FRONTAL (INOX)	COUVERCLE FRONTAL (INOX)
31	587394	FRONT COVER (PRE-COATED)	TAPA FRONTAL (PRE-COATED)	COUVERCLE FRONTAL (PRE-COATED)
32	322974	PLUG KAPSTO GPN320GL18	TAPON KAPSTO GPN320GL18	BOUCHON KAPSTO GPN320GL18
33	316695	ALLEN SCREW DIN7984-8 M8X 25	TOR.ALLDIN7984-8.8B.TRI.M 8X25	VIS ALLEN DIN7984-8.8 B.M8X 25
34	333625	SCREW T25 A18EST.M6X15 TRI.	TOR.ALOM.T25 A18EST.M6X15 TRI.(ESPECIAL)	VIS T25 A18EST.M6X15 TRI.
35	333294	SCREW T25 AR.18ESTR.M 6X15 INOX	TORNILLO ALOM.T25 M 6X15 INOX(ESPECIA	VIS T25 AR.18ESTR.M 6X15 INOX
36	326116	SCREW 410TT85T 4X10 INOX	TORNILLO 410TT85T 4X10 INOX (ESPECIAL)	VIS 410TT85T 4X10 INOX
37	352724	SCREW 416TT85T 4X16 INOX	TORNILLO 416TT85T 4X16 INOX (ESPECIAL)	VIS 416TT85T 4X16 INOX
38	322990	SCREW 4510RFAT INOX 4.5X10	TORNILLO 4510RFAT INOX 4.5X10 (ESPECIAL)	VIS 4510RFAT INOX 4.5X10
39	146233	BICR.HEX SCREW DIN933-8 M6X15	TOR.EX.DIN933-8.8 B.TRI.M 6X15	VIS HEX DIN933-8.8 BICR.M6X15
40	176826	SELF-LOCKING NUT DIN985-8 B.TRI.M5	TUER.AUTOBL.DIN985-8 B.TRI.M5	ECROU AUTOBLOCANT DIN 985-8 B.TRI.M5
41	176834	SELF-LOCKING NUT DIN985-8 B.TRI.M6	TUER.AUTOBL.DIN985-8 B.TRI.M6	ECROU AUTOBLOCANT DIN985-8 B.TRI.M6
42	332114	NUT M6	TUER.RAPIDA TRT M6-1 0212827	ECROU M6
		WITHOUT ILLUSTRATION	SIN ILUSTRACION	SANS ILLUSTRATION
	431189	JOINT ADJUSTING RING	ARO AJUSTE JUNTA	BAGUE REGLAGE JOINT

info@zipnasklade.ru
8(800)500-69-51

RMS613
Pag. 04

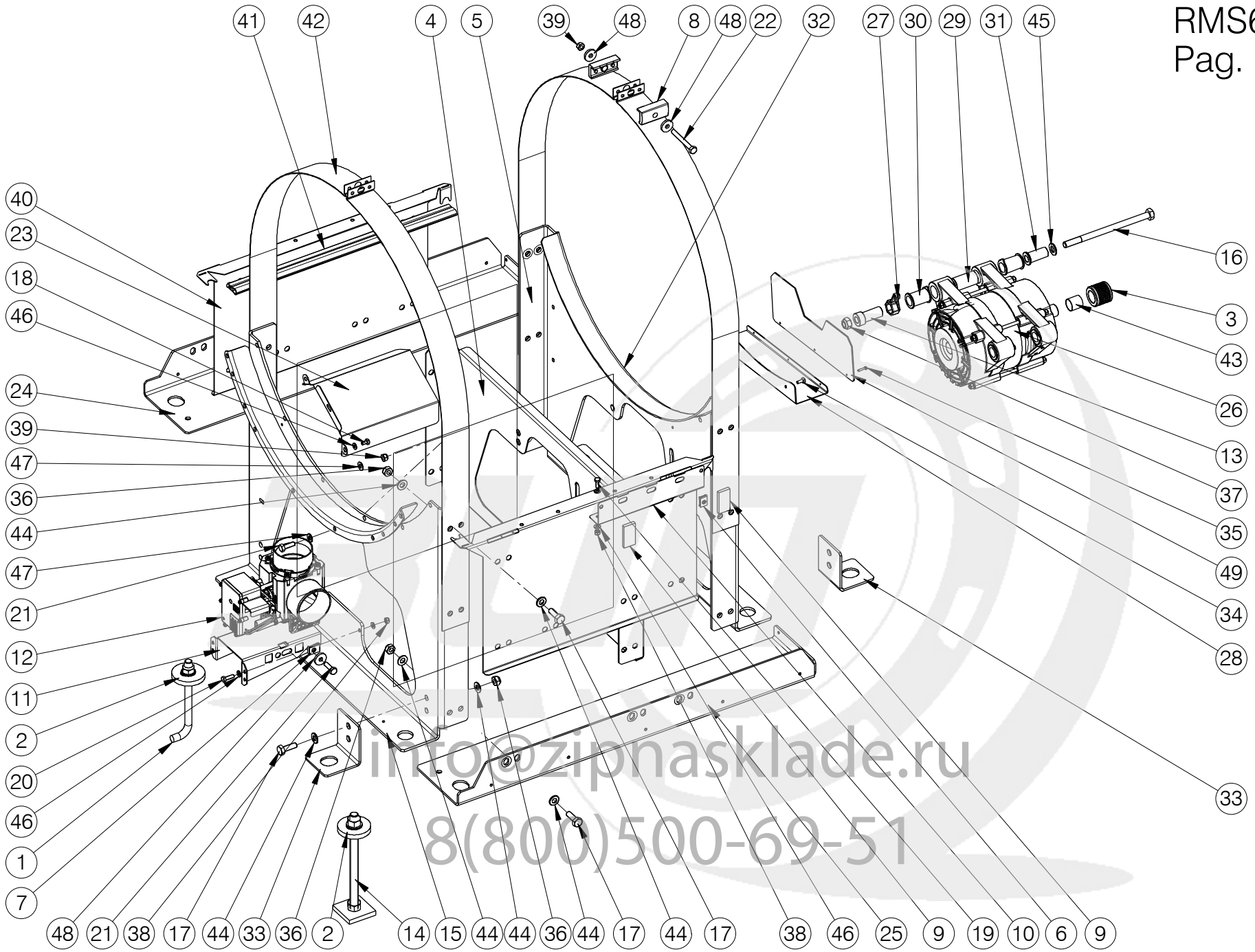

info@zipnasklade.ru
8(800)500-69-51

Nº	REF	DENOMINATION	DENOMINACIÓN	DENOMINATION
1	117929	HOLDING DOWN BUMP (NUT&WASHER) (RMS613)	ESPARRAGO ANCLAJE (RMS613)	GOUJON SCELLEMENT (ECROU+ROND) (RMS613)
2	427617	HOLDING-DOWN BUMP WASHER	ARANDELA ESPARRAGO ANCLAJE	RONDELLE GOUJON SCELLEMENT
3	524116	MOTOR PULLEY MT90-90/4 MT 90-120/4M	POLEA MOTOR MT 90-90/4 MT 90-120/4M	POULIE MOTOR MT 90-90/4 MT 90-120/4M
4	587154	MOTOR CHASSIS PLATE	PLACA CHASIS MOTOR	PLAQUE MOTOR CHASSIS
5	587337	CHASSIS REAR PLATE	PLACA CHASIS POSTERIOR	PLAQUE CHASSIS POSTERIEUR
6	332114	NUT M6	TUER.RAPIDA TRT M6-1 0212827	ECROU M6
7	354597	QUICK NUT TRT M8-1 0212829	TUER.RAPIDA TRT M8-1 0212829	ECROU RAPIDE TRT M8-1 0212829
8	338053	CLAMP TEIGHTENER	TENSOR ABRAZADERA	TENDEUR BRIDE
9	517656	COVER ABSORBER PROFILE	PERFIL AMORTIGUADOR TAPA	PROFILE AMORTISSEUR COUVERCLE
10	594358	COVER FIXING ANGLE	ANGULO FIJACION TAPAS	COUVERCLE FIXATION ANGLE
11	584714	DRAIN BRACKET	SOPORTE DESAGÜE	SUPPORT VIDANGE
12	600544	DRAIN G3-O-90	DESAGÜE G3-O-90	VIDANGE G3-O-90
13	529206	MOTOR SLEEVE	CASQUILLO MOTOR	FRETTE MOTEUR
14	540567	HOLDING-DOWN BUMP (RMG613)	ESPARRAGO ANCLAJE (RMG613)	GOUJON SCELLEMENT (RMG613)
15	587345	CHASSIS FRONT PLATE	PLACA CHASIS FRONTAL	PLAQUE CHASSIS FRONTAL
16	545400	BIC.HEX SCREW DIN931-8.8	TOR.EX.DIN931-8.8B.TRI.M12X190	VIS HEX BICR.DIN931-8.8
17	146506	8G HEX.SCREW DIN 933 M-10X30	TOR.EX.DIN933-8.8 B.TRI.M10X30	VIS HEX. 8G DIN 933 M-10X30
18	165621	BIC HEX SCREW DIN933-8,8 M6X10	TOR.EX.DIN933-8.8 B.TRI.M 6X10	VIS HEX DIN933-8,8 BICR M6X10
19	146233	BICR.HEX SCREW DIN933-8 M6X15	TOR.EX.DIN933-8.8 B.TRI.M 6X15	VIS HEX DIN933-8.8 BICR.M6X15
20	146316	BICR.HEX SCREW DIN933-8 M-6X20	TOR.EX.DIN933-8.8 B.TRI.M 6X20	VIX HEX BICR.DIN933-8.8 M-6X20
21	192849	BIC.HEX SCREW DIN933-8 M-8X25	TOR.EX.DIN933-8.8 B.TRI.M 8X25	VIS HEX.DIN933-8,8 BICR.M-8X25
22	193391	HEX SCREW 8G DIN933 M- 8X 70	TOR.EX.DIN933-8.8 B.TRI.M 8X70	VIS HEX.8G DIN933 M- 8X 70
23	587634	VARIATOR PROTECTION	PROTECCION VARIADOR	PROTECTION VARIATEUR
24	587881	LANE LEFT PROFILE	PERFIL LONGITUDINAL IZQUIERDO	PROFILE LONGITUDINALE GAUCHE
25	587865	LANE RIGHT PROFILE	PERFIL LONGITUDINAL DERECHO	PROFILE LONGITUDINALE DROIT
26	594572	MOTOR MT 90-90/4.	MOTOR MT 90-90/4	MOTOR MT 90-90/4
	525790	BEARING 6305-2Z/C3 (END PULLEY)	RODAMIENTO 6305-2Z/C3 (EXTREMO POLEA)	ROULEMENT 6305-2Z/C3 (FINAL POULIE)

info@zipnasklade.ru
8(800)500-69-51

Nº	REF	DENOMINATION	DENOMINACIÓN	DENOMINATION
	501577	BEARING 6205-2Z/C3 (OPPOSITE END PULLEY)	RODAMIENTO 6205-2Z/C3 (EXTREMO OPUESTO POLEA)	ROULEMENT 6205-2Z/C3 (FINAL OPPOSE POULIE)
27	338095	MOTOR NUT BRACKET	SOPORTE TUERCA MOTOR	SUPPORT ECROU MOTEUR
28	431163	MOTOR PROTECTION	PROTECCION MOTOR	PROTECTION MOTEUR
29	529214	MOTOR SEPARATOR	SEPARADOR MOTOR	SEPARATION MOTEUR
30	432203	MOTOR SILENTBLOCK	SILENTBLOC MOTOR	SILENTBLOCK MOTEUR
31	423103	MOTOR SLEEVE	CASQUILLO MOTOR	FRETTE MOTEUR
32	340729	OUTER-DRUM SUPPORT PROFILE	PERFIL APOYO ENVOLVENTE	PROFILE APPUI CUVE
33	427609	REAR RENFORT ANGLE	ANGULO REFUERZO POSTERIOR	ANGLE RENFORT ARRIERE
34	343434	SCREW 512TTAET M5X12	TORNILLO 512TTAET M5X12 (ESPECIAL)	VIS 512TTAET M5X12
35	332627	SCREW REF. TT85 T M3 X16	TOR. REF. TT85 T M3 X16	VIS REF.TT85 T M3 X16
36	150649	SELF-LOCKING NUT DIN985-8 B.TRI.M10	TUER.AUTOB.DIN985-8 B.TRI.M10	ECROU AUTOBLOCANT DIN985-8 B.TRI.M10
37	150656	SELF-LOCKING NUT DIN985-8 B.TRI.M12	TUER.AUTOB.DIN985-8 B.TRI.M12	ECROU AUTOBLOCANT DIN985-8 B.TRI.M12
38	176834	SELF-LOCKING NUT DIN985-8 B.TRI.M6	TUER.AUTOBL.DIN985-8 B.TRI.M6	ECROU AUTOBLOCANT DIN985-8 B.TRI.M6
39	164285	SELF-LOCKING NUT DIN985-8 B.TRI.M8	TUER.AUTOBL.DIN985-8 B.TRI.M8	ECROU AUTOBLOCANT DIN985-8 B.TRI.M8
40	587873	CHASSIS SIDE PANEL	LATERAL CHASIS	LATERAL CHASSIS
41	433102	SIDE PROFILE	PERFIL LATERAL	PROFILE LATERALE
42	427807	OUTER-DRUM CLAMP	ABRAZADERA ENVOLVENTE	BRIDE CUVE
43	525808	RING TOLER.STAR 0820-024-03	ANILLO TOLER.STAR 0820-024-03	BAGUE TOLER STAR.0820-024-03
44	149500	BICR.WASHER B DIN125-ST 10,5	ARAN.B DIN125-ST B.TRI.10,5	RONDELLE B DIN125-ST BICR.10,5
45	149419	BICR.WASHER B DIN125-ST 13	ARAN.B DIN125-ST B.TRI.13	RONDELLE B DIN125-ST BICR.13
46	149526	BICR.WASHER B DIN125-ST 6,4	ARAN.B DIN125-ST B.TRI. 6,4	RONDELLE B DIN125-ST BICR.6,4
47	149518	BICR.WASHER B DIN125-ST 8,4	ARAN.B DIN125-ST B.TRI. 8,4	RONDELLE.B DIN125-ST BICR.8,4
48	261529	WASHER 25X8,5X4	ARANDELA 25X8.5X4 TRIVALEN.	RONDELLE 25X8,5X4
49	432674	WIRE PROTECTION	PROTECCION CABLES	PROTECTION CABLES

info@zipnasklade.ru
8(800)500-69-51

RMS613
Pag. 05

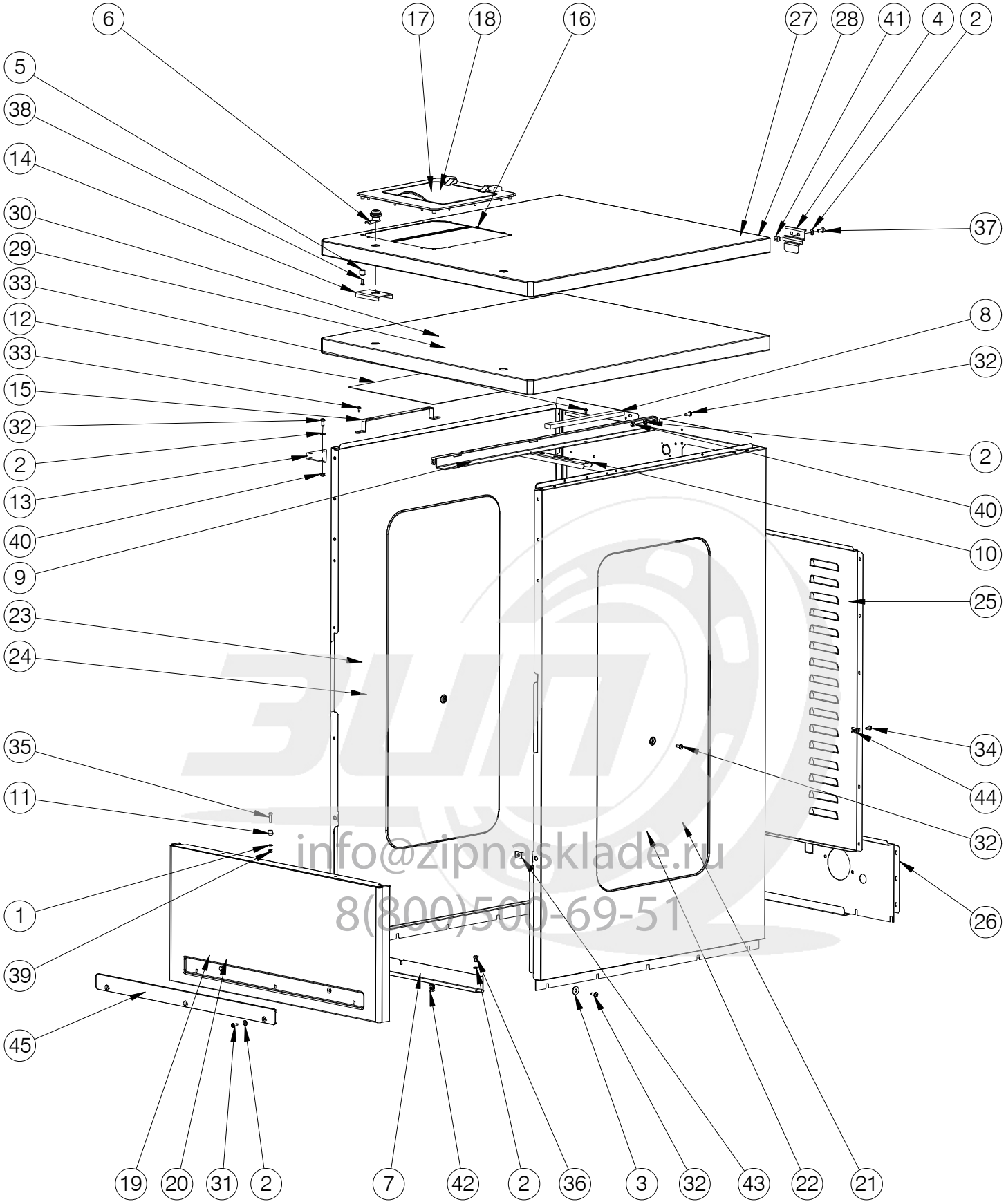

info@zipnasklade.ru
8(800)500-69-51

Nº	REF	DENOMINATION	DENOMINACIÓN	DENOMINATION
1	149534	BICR.WASHER B DIN125-ST 5,3	ARAN.B DIN125-ST BICR. 5,3	RONDELLE B BICR.DIN125-ST 5,3
2	149526	BICR.WASHER B DIN125-ST 6,4	ARAN.B DIN125-ST B.TRI. 6,4	RONDELLE B DIN125-ST BICR.6,4
3	153205	WASHER 20X7X2	ARANDELA 20X7X2 TRIVALEN.	RONDELLE 20X7X2
4	431593	TOP COVER HINGE	BISAGRA TAPA SUPERIOR	CHARNIERE COUVERCLE SUPERIEUR
5	444398	FRAME FIXATION SLEEVE	CASQUILLO FIJACION MARCO	FRETTE FIXATION CADRE
6	196915	LOCK RE.20.00.02.05	CERRADURA REF.20.00.02.05 *	FERMETURE REF.20.00.02.05
	196923	LOCK KEY RE.10.41.213	LLAVE REF.10.41.213 COMB.T-205	CLE FERMETURE REF.10.41.213
7	587915	FRONT COVER FIXING-PIECE	FIJACION TAPA FRONTAL	FIXATION COUVERCLE FRONTAL
8	439000	COVER ABSORBER PROFILE	PERFIL AMORTIGUADOR TAPA	PROFILE AMORTISSEUR COUVERCLE
9	428003	SOAP DISP.HOLDING DOWN PROFILE	PERFIL ANCLAJE DOSIFICADOR	PROFILE SCELLEMENT BAD A PROD.
10	423327	HOSE FIXING PROFILE	PERFIL FIJACION TUBOS	PROFILE FIXATION TUBES
11	322909	LOWER PANEL PIVOT	PIVOTE TAPA INFERIOR	PIVOT COUVERCLE INFERIEUR
12	590539	TOP COVER BLIND PROTECTOR (WITHOUT SOAP DISPENSER)	PROTECTOR TAPA SUPERIOR CIEGA* (SIN DOSIFICADOR)	AVEUGLE SUPERIEUR PROTECTEUR COUVERCLE (NAS BAC A PRODUITS)
13	406298	PANEL FIXING RENFORT	REFUERZO FIJACION TAPAS	REFORT FIXATION COUVERCLES
14	242115	UPPER COVER RENFORT	REFUERZO TAPA SUPERIOR	REFORT COUVERCLE SUPERIEUR
15	431742	SOAP DISPENSER BRACKET	SOPORTE DOSIFICADOR	SUPPORT BAC A PRODUITS
16	193540	MIKALOR QUICK FIXING 211038-8	SUJEC.RAPIDA MIKALOR 211038-8	FIXATION RAPIDE MIKALOR 211038-8
17	510727	SOAP DISPENSER LID (RMS613)	TAPA DOSIFICADOR (RMS613)	COUVERCLE BAC A PRODUITS (RMS613)
18	510735	SOAP DISPENSER LID (REM030)	TAPA DOSIFICADOR (REM033)	COUVERCLE BAC A PRODUITS (REM030)
19	587410	LOWER FRONT COVER (PRE-COATED)	TAPA FRONTAL INFERIOR (PRE-COATED)	COUVERCLE FRONTAL INFERIEUR (PRE-COATED)
20	587428	LOWER FRONT COVER (INOX)	TAPA FRONTAL INFERIOR (INOX)	COUVERCLE FRONTAL INFERIEUR (INOX)
21	10087666	SIDE COVER (PRE-COATED)	TAPA LATERAL (PRE-COATED)	PANNEAU LATÉRAL (PRE-COATED)
22	10087658	SIDE COVER (INOX)	TAPA LATERAL (INOX)	PANNEAU LATÉRAL (INOX)
23	10087641	SIDE COVER (PRE-COATED)	TAPA LATERAL (PRE-COATED)	PANNEAU LATÉRAL (PRE-COATED)

info@zipnasklade.ru
8(800)500-69-51

Nº	REF	DENOMINATION	DENOMINACIÓN	DENOMINATION
24	10087633	SIDE COVER (INOX)	TAPA LATERAL (INOX)	PANNEAU LATÉRAL (INOX)
25	587279	REAR COVER	TAPA POSTERIOR	COUVERCLE POSTERIEUR
26	428623	LOWER REAR COVER	TAPA POSTERIOR INFERIOR	COUVERCLE ARRIERE INFERIEUR
27	428888	UPPER COVER (INOX)	TAPA SUPERIOR (INOX)	COUVERCLE SUPERIEUR (INOX)
28	444901	UPPER COVER (PRE-COATED)	TAPA SUPERIOR (PRE-COATED)	COUVERCLE SUPERIEUR (PRE-COATED)
29	591636	UPPER COVER (WITHOUT SOAP DISPENSER) (PRE-COATED)	TAPA SUPERIOR (SIN DOSIFICADOR) (PRE-COATED)	COUVERCLE SUPERIEUR (NAS BAC A PRODUITS) (PRE-COATED)
30	591644	UPPER COVER (WITHOUT SOAP DISPENSER) (INOX)	TAPA SUPERIOR (SIN DOSIFICADOR) (INOX)	COUVERCLE SUPERIEUR (NAS BAC A PRODUITS) (INOX)
31	328237	SCREW T20 AR.18ESTR. M5X15	TORNILLO C.ALOM.T20 M5X15 (ESPECIAL)*	VIS T20 AR.18ESTR. M5X15
32	333625	SCREW T25 A18EST.M6X15 TRI.	TOR.ALOM.T25 A18EST.M6X15 TRI.(ESPECIAL)	VIS T25 A18EST.M6X15 TRI.
33	183400	PLATE SCREW ST-4, 20 P.F. C/AL.T25	TORNILLO CHAPA ST-4 (ESPECIAL)*	VIS PLAQUE ST-4, 20 P.F. C/AL.T25
34	149153	PLATE SCREW ST-4, 80 P.C. A/AL.T25	TORNILLO CHAPA ST-4 (ESPECIAL)*	VIS PLAQUE ST-4, 80 P.C. A/AL.T25
35	146134	BICR CYL SCREW DIN84 M-5X20	TOR.CIL.DIN84-4.8 B.TRI.M 5X20	VIS CYL BICR DIN84-4.8 M-5X20
36	165621	BIC HEX SCREW DIN933-8,8 M6X10	TOR.EX.DIN933-8.8 B.TRI.M 6X10	VIS HEX DIN933-8,8 BICR M6X10
37	146233	BICR.HEX SCREW DIN933-8 M6X15	TOR.EX.DIN933-8.8 B.TRI.M 6X15	VIS HEX DIN933-8.8 BICR.M6X15
38	326660	SCREW 412RFX87T INOXA2 4X12	TORNILLO 412RFX87T INOXA2 4X12(ESPECIAL)	VIS 412RFX87T INOXA2 4X12
39	176826	SELF-LOCKING NUT DIN985-8 B.TRI.M5	TUER.AUTOBL.DIN985-8 B.TRI.M5	ECROU AUTOBLOCANT DIN 985-8 B.TRI.M5
40	176834	SELF-LOCKING NUT DIN985-8 B.TRI.M6	TUER.AUTOBL.DIN985-8 B.TRI.M6	ECROU AUTOBLOCANT DIN985-8 B.TRI.M6
41	165019	CAGED NUT M-6 0,5-1,5 R.310007-9	TUER.ENJ.M6 0,5-1,5 R.310007-9	*ECROU PRESIONER M-6 0,5-1,5 R.310007-9
42	328575	QUICK NUT TRT M5-1 0212831-6	TUER.RAPIDA TRT M5-1 0212831-6	ECROU RAPIDE TRT M5-1
43	332114	NUT M6	TUER.RAPIDA TRT M6-1 0212827	ECROU M6
44	135228	NUT NUL 506-2A REF. 213048-1	TUERCA SEG.NUL 506-2B 213048-1	ECROU NUL 506-2A REF. 213048-1
45	323808	TOE PLATE	ZOCALO	PLAQUE HABILLAGE INF.

info@zipnasklade.ru
8(800)500-69-51

RMS613 LC/LP/CC
RMS617 LC/LP/CC
Pag. 06

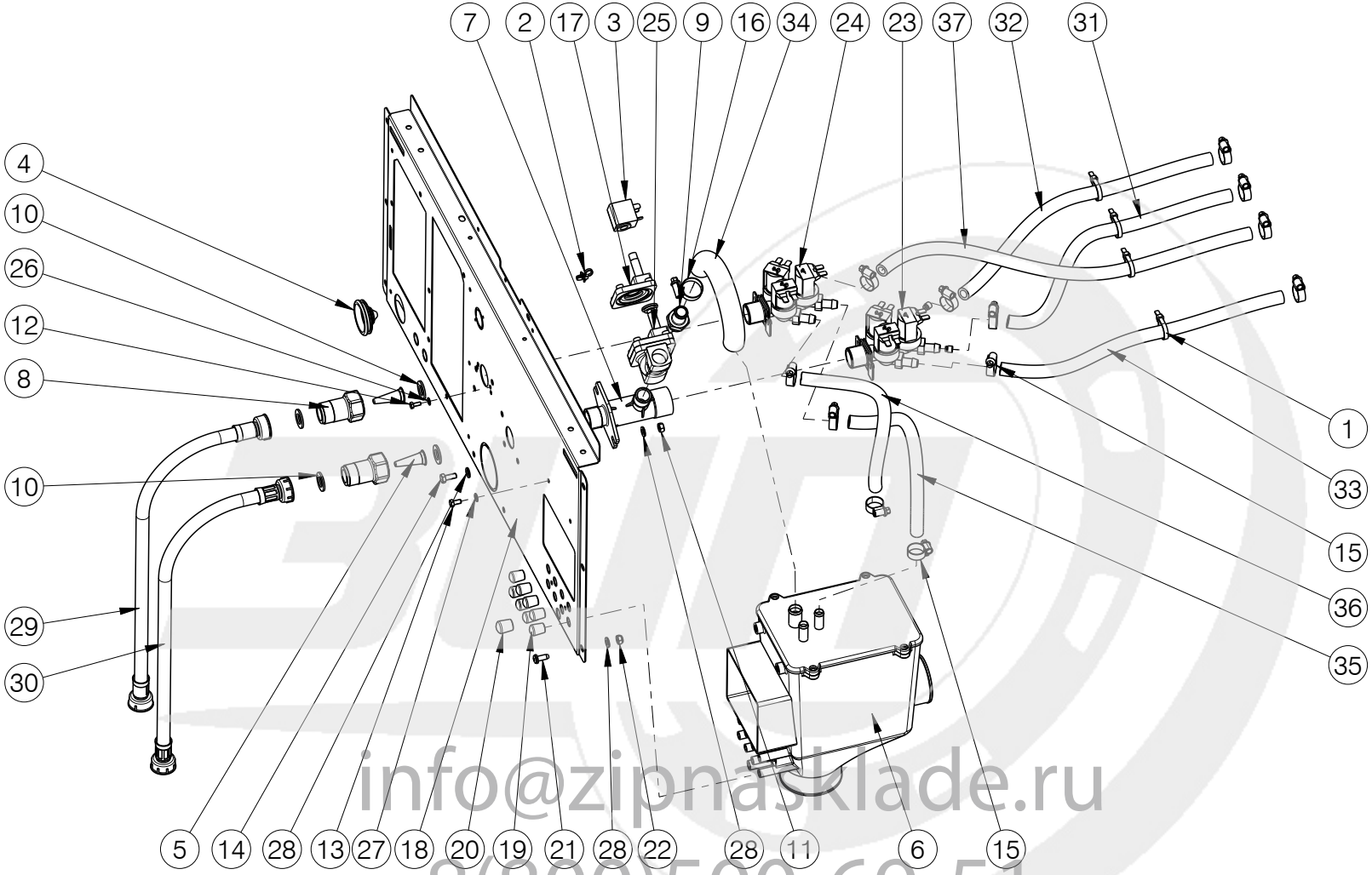

info@zipnasklade.ru
8(800)500-69-51

Nº	REF	DENOMINATION	DENOMINACIÓN	DENOMINATION
1	140525	CLAMP 2244-0	BRIDA UNEX 2244-0 *	BRIDE 2244-0
2	326132	CABLE TIE Ø35 NATURAL	ABRAZADERA Ø35 NATURAL	BRIDE Ø35 NATUREL
3	333716	COIL AB 5W 12V CC 042N0806	BOBINA AB 5W 12V CC 042N0806	BOBINE AB 5W 12V CC 042N0806
4	139683	CONE ECPC-6	CONO HIMEL ECPC-6	CONE ECPC-6
5	315614	CONICAL FILTER REF.4008-2-1	FILTRO CONICO REF.4008-2-1	FILTRE CONIQUE REF.4008-2-1
6	339689	DISTRIBUTOR	DISTRIBUIDOR	DISTRIBUTEUR
7	333682	ELECTROVALVE BRACKET	SOPORTE ELECTROVALVULAS	SUPPORT ELECTROVANNES
8	315317	FILTER BODY	CUERPO FILTRO	CORPS FILTRE
9	333690	FIG. 243 MI 1/2" BRASS	FIGURA 243 MI DE 1/2" LATON	FIG. 243 MI 1/2" LAITON
10	114348	GASKET D24XD13,5X2	JUNTA MIFLEX D24X13, 5X2 EPDM WRC 400105	JOINT D24XD13,5X2
11	150227	BICR HEX NUT DIN934-8 M6	TUER.EX.DIN934-8 B.TRI.M 6	ECROU HEX DIN934-8 BICR.M6
12	146258	BIC.HEX SCREW DIN933-4.8 M4X10	TOR.EX.DIN933-4.8 B.TRI.M 4X10	VIS HEX DIN933-4.8 BICR.M 4X10
13	146274	BICR.HEX SCREW DIN933-8 M-5X10	TOR.EX.DIN933-8.8 B.TRI.M 5X10	VIS HEX.BICR.DIN933-8.8 M-5X10
14	146233	BICR.HEX SCREW DIN933-8 M6X15	TOR.EX.DIN933-8.8 B.TRI.M 6X15	VIS HEX DIN933-8.8 BICR.M6X15
15	155150	HOSE CLIP ASFA-L W2 8-16	ABRAZADERA ASFA-L W2 8-16	COLLIER ASFA-L W2 8-16
16	156109	CLAMP 16-27	ABRAZADERA 16- 27 *	BRIDE 16-27
17	341685	SPARE-PARTS KIT EV220A 12-14B	KIT REPUES.EV220A 12-14B *	KIT RECHANGES EV220A 12-14B
18	587485	REAR PANEL	PANEL POSTERIOR	PANNEAU POSTERIEUR
19	156679	CONICAL END-PIECE R-16 D10	TOPE CONICO REPRIMSA R-16 D10	BOUCHON CONIQUE R-16 D10
20	357624	CONICAL END-PECE R-16 D12	TOPE CONICO REPRIMSA R-16 D12	BOUCHON CONIQUE R-16 D12
21	333625	SCREW T25 A18EST.M6X15 TRI.	TOR.ALOM.T25 A18EST.M6X15 TRI.(ESPECIAL)	VIS T25 A18EST.M6X15 TRI.
22	176834	SELF-LOCKING NUT DIN985-8 B.TRI.M6	TUER.AUTOBL.DIN985-8 B.TRI.M6	ECROU AUTOBLOCANT DIN985-8 B.TRI.M6
23	511139	THREE TRACK ELECTROVALVE	ELECTROVALVULA TRES VIAS	ELECTROVANNE TROIS VOIES
	510933	REGULATOR 4 L/MIN.RED	REGULADOR DE 4L/MIN.ROJO CLARO	REGULATEUR 4 L/MIN ROUGE
	156265	REGULATOR 3 L/MIN (BLACK)	REGULADOR DE 3 L/MIN. (NEGRO)	REGULATEUR 3 L/MIN (NOIR)
	300194	YELLOW CASE 30053	ESTUCHE AMARILLO 30053	BOITE JAUNE 30053
	300202	INTEGRAL GUIDE-MEMBRANE 30696	MEMBRANA-GUIA INTEGRAL 30696 *	MEMBRANE-GUIDE INTEGRALE 30696
	332296	COIL 255043000000 12VCC	BOBINA 255043000000 12VCC	BOBINE 255043000000 12VCC

info@zipnasklade.ru
8(800)500-69-51

Nº	REF	DENOMINATION	DENOMINACIÓN	DENOMINATION
24	333674	TRIPLE ELECTROVALVE 369 180º	ELECTROV.TRIPLE 369 180º12VCC*	ELECTROVANNE TRIPLE 369 180º
	300194	YELLOW CASE 30053	ESTUCHE AMARILLO 30053	BOITE JAUNE 30053
	300202	INTEGRAL GUIDE-MEMBRANE 30696	MEMBRANA-GUIA INTEGRAL 30696 *	MEMBRANE-GUIDE INTEGRALE 30696
	332296	COIL 255043000000 12VCC	BOBINA 255043000000 12VCC	BOBINE 255043000000 12VCC
25	333708	VALVE EV220A G12 042U4022	CUERPO VAL.EV220A G12 042U4022	VANNE EV220A G12 042U4022
26	149476	BICR.WASHER B DIN125-ST 4,3	ARAN.B DIN125-ST B.TRI. 4,3	RONDELLE B DIN125-ST BICR.4,3
27	149534	BICR.WASHER B DIN125-ST 5,3	ARAN.B DIN125-ST BICR. 5,3	RONDELLE B BICR.DIN125-ST 5,3
28	149526	BICR.WASHER B DIN125-ST 6,4	ARAN.B DIN125-ST B.TRI. 6,4	RONDELLE B DIN125-ST BICR.6,4
29	326587	WATER INLET AC DI12,5 L1,5M	TUBO ENTRADA AC DI12,5 L1,5M *	FLEXIBLE ENTRÉE AC DI12,5 L1,5
30	326579	WATER INLET AF DI12,5 L1,5M	TUBO ENTRADA AF DI12,5 L1,5M *	FLEXIBLE ENTRÉE AF DI12,5 L,5M
31	116608	WATER INLET HOSE	TUBO ENTRADA AGUA	TUBE ENTREE EAU
32	116608	WATER INLET HOSE	TUBO ENTRADA AGUA	TUBE ENTREE EAU
33	427195	WATER INLET HOSE	TUBO ENTRADA AGUA	TUBE ENTREE EAU
34	432666	WATER INLET HOSE	TUBO ENTRADA AGUA	TUBE ENTREE EAU
35	10919850	WATER INLET TUBE	TUBO ENTRADA AGUA	TUBE ENTREE EAU
36	10919850	WATER INLET TUBE	TUBO ENTRADA AGUA	TUBE ENTREE EAU
37	10921278	WATER INLET HOSE	TUBO ENTRADA AGUA	TUBE ENTRÉE EAU

info@zipnasklade.ru
8(800)500-69-51

RMS613 LCAT/LPAT/CCAT
RMS617 LCAT/LPAT/CCAT
Pag. 07

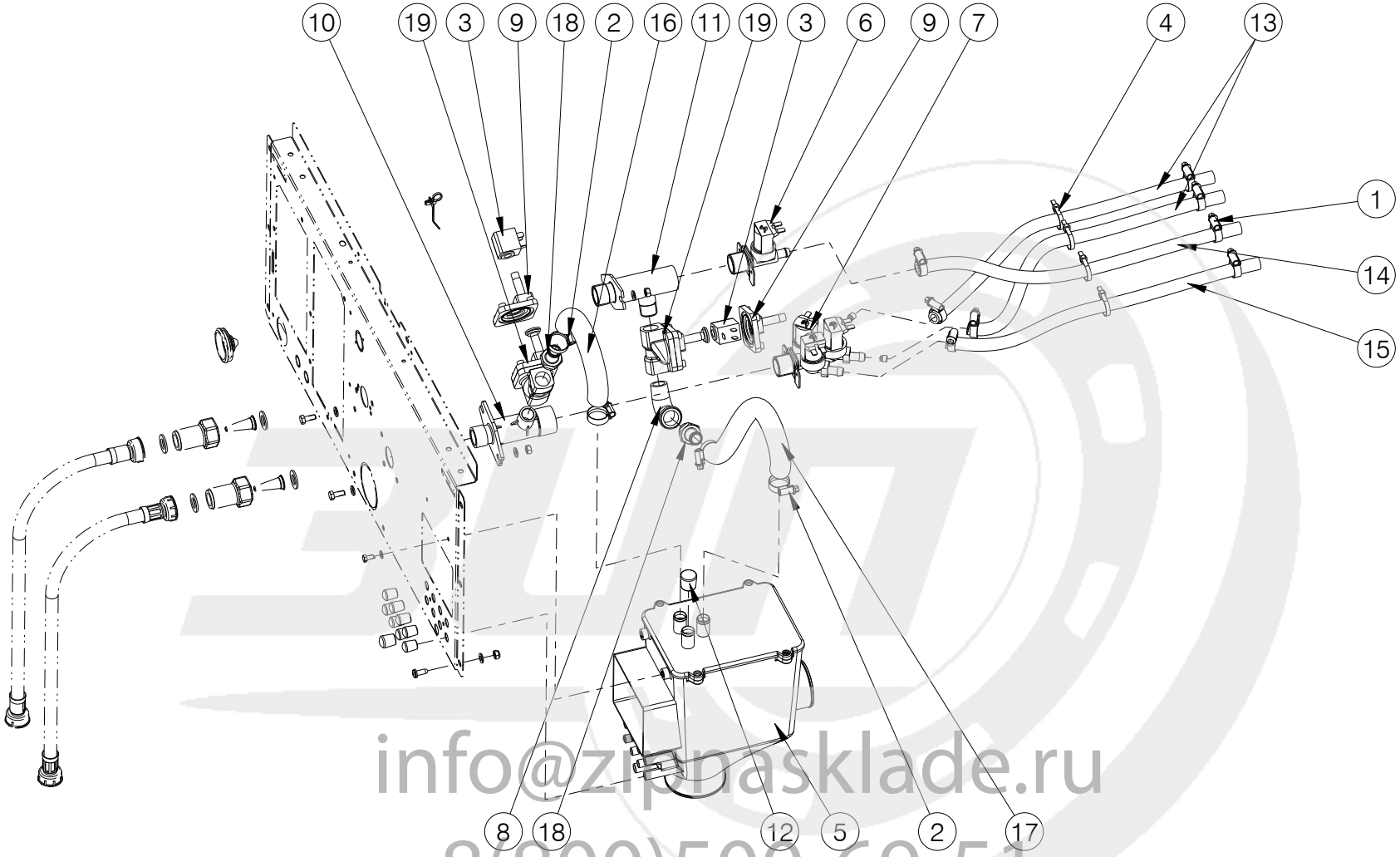

info@zipnasklade.ru
8(800)500-69-51

Nº	REF	DENOMINATION	DENOMINACIÓN	DENOMINATION
1	155150	HOSE CLIP ASFA-L W2 8-16	ABRAZADERA ASFA-L W2 8-16	COLLIER ASFA-L W2 8-16
2	156109	CLAMP 16-27	ABRAZADERA 16- 27 *	BRIDE 16-27
3	333716	COIL AB 5W 12V CC 042N0806	BOBINA AB 5W 12V CC 042N0806	BOBINE AB 5W 12V CC 042N0806
4	140525	CLAMP 2244-0	BRIDA UNEX 2244-0 *	BRIDE 2244-0
5	333658	DISTRIBUTOR	DISTRIBUIDOR	DISTRIBUTEUR
6	323329	SIMPLE ELECTROVALVE 329 180	ELECTROV.SIMPLE 329 180	ELECTROVANNE SIMPLE 329 180
	300194	YELLOW CASE 30053	ESTUCHE AMARILLO 30053	BOITE JAUNE 30053
	300202	INTEGRAL GUIDE-MEMBRANE 30696	MEMBRANA-GUIA INTEGRAL 30696 *	MEMBRANE-GUIDE INTEGRALE 30696
	332296	COIL 255043000000 12VCC	BOBINA 255043000000 12VCC	BOBINE 255043000000 12VCC
7	511139	THREE TRACK ELECTROVALVE	ELECTROVALVULA TRES VIAS	ELECTROVANNE TROIS VOIES
	510933	REGULATOR 4 L/MIN.RED	REGULADOR DE 4L/MIN.ROJO CLARO	REGULATEUR 4 L/MIN ROUGE
	156265	REGULATOR 3 L/MIN (BLACK)	REGULADOR DE 3 L/MIN. (NEGRO)	REGULATEUR 3 L/MIN (NOIR)
	300194	YELLOW CASE 30053	ESTUCHE AMARILLO 30053	BOITE JAUNE 30053
	300202	INTEGRAL GUIDE-MEMBRANE 30696	MEMBRANA-GUIA INTEGRAL 30696 *	MEMBRANE-GUIDE INTEGRALE 30696
	332296	COIL 255043000000 12VCC	BOBINA 255043000000 12VCC	BOBINE 255043000000 12VCC
8	129494	ELBOW FIG 92 1/2" GALV	FIGURA 92 DE 1/2"AMAT GALV.	COUDE FIG 92 1/2" GALV
9	341685	SPARE-PARTS KIT EV220A 12-14B	KIT REPUES.EV220A 12-14B *	KIT RECHANGES EV220A 12-14B
10	333682	ELECTROVALVE BRACKET	SOPORTE ELECTROVALVULAS	SUPPORT ELECTROVANNES
11	552133	ELECTROVALVE BRACKET	SOPORTE ELECTROVALVULAS	SUPPORT ELECTROVANNES
12	156687	CONICAL END-PIECE R-16 D16	TOPE CONICO REPRIMSA R-16 D16	ARRET CONIQUE R-16 D16
13	116608	WATER INLET HOSE	TUBO ENTRADA AGUA	TUBE ENTREE EAU
14	411397	WATER INLET HOSE	TUBO ENTRADA AGUA	TUBE ENTREE EAU
15	427195	WATER INLET HOSE	TUBO ENTRADA AGUA	TUBE ENTREE EAU
16	432666	WATER INLET HOSE	TUBO ENTRADA AGUA	TUBE ENTREE EAU
17	432690	WATER INLET HOSE	TUBO ENTRADA AGUA	TUBE ENTREE EAU
18	333690	FIG. 243 MI 1/2" BRASS	FIGURA 243 MI DE 1/2" LATON	FIG. 243 MI 1/2" LAITON
19	333708	VALVE EV220A G12 042U4022	CUERPO VAL.EV220A G12 042U4022	VANNE EV220A G12 042U4022

info@zipnasklade.ru
8(800)500-69-51

REM033 CC
REM040 CC
Pag. 08

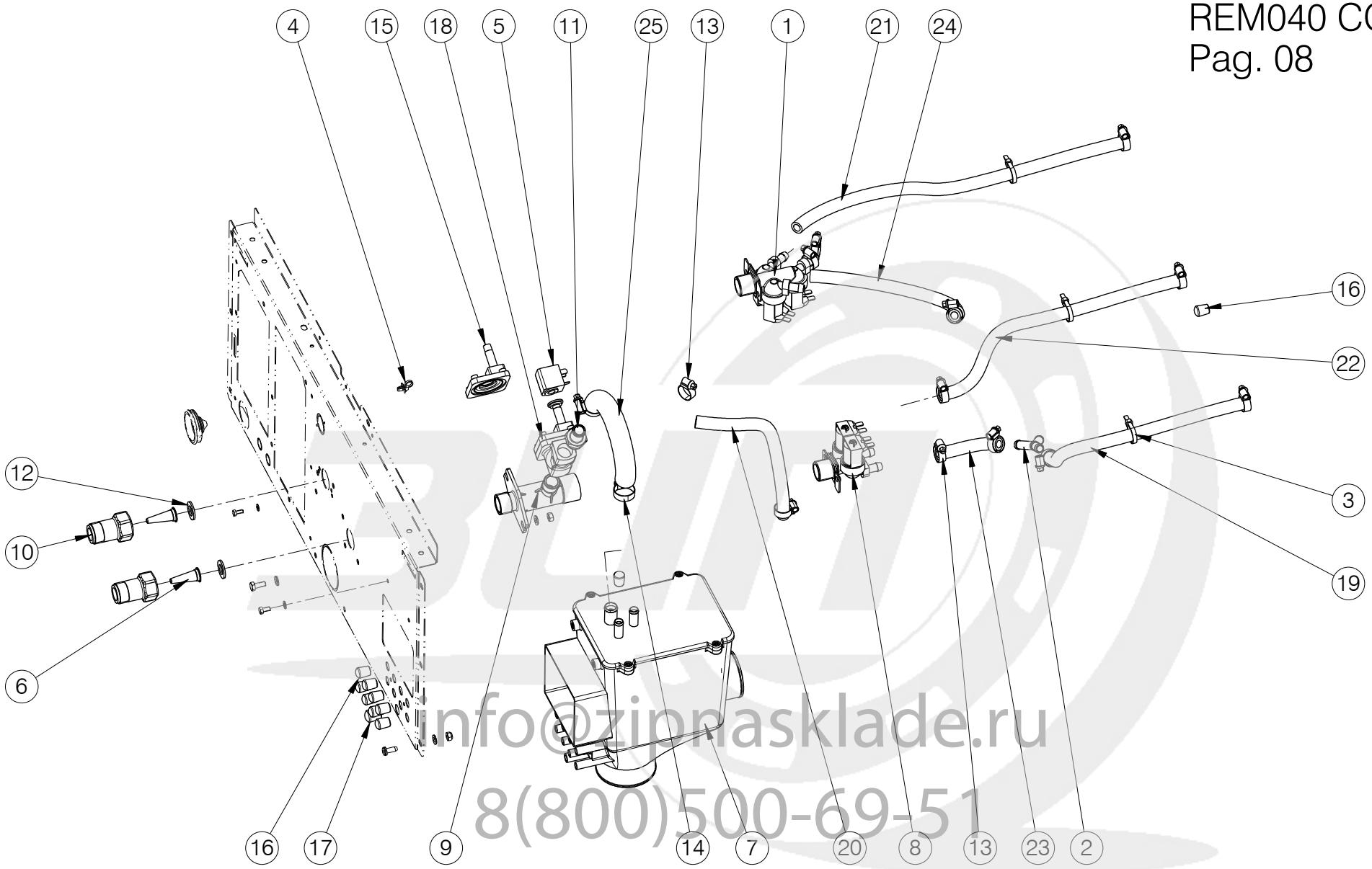

info@zipnasklade.ru
8(800)500-69-51

Nº	REF	DENOMINATION	DENOMINACIÓN	DENOMINATION
1	511022	THREE TRACK ELECTROVALVE	ELECTROVALVULA TRES VIAS	ELECTROVANNE TROIS VOIES
	510933	REGULATOR 4 L/MIN.RED	REGULADOR DE 4L/MIN.ROJO CLARO	REGULATEUR 4 L/MIN ROUGE
	300194	YELLOW CASE 30053	ESTUCHE AMARILLO 30053	BOITE JAUNE 30053
	300202	INTEGRAL GUIDE-MEMBRANE 30696	MEMBRANA-GUIA INTEGRAL 30696 *	MEMBRANE-GUIDE INTEGRALE 30696
	332296	COIL 255043000000 12VCC	BOBINA 255043000000 12VCC	BOBINE 255043000000 12VCC
2	152165	BRANCH	BIFURCACION	BIFURCATION
3	140525	CLAMP 2244-0	BRIDA UNEX 2244-0 *	BRIDE 2244-0
4	326132	CABLE TIE Ø35 NATURAL	ABRAZADERA Ø35 NATURAL	BRIDE Ø35 NATUREL
5	333716	COIL AB 5W 12V CC 042N0806	BOBINA AB 5W 12V CC 042N0806	BOBINE AB 5W 12V CC 042N0806
6	315614	CONICAL FILTER REF.4008-2-1	FILTRO CONICO REF.4008-2-1	FILTRE CONIQUE REF.4008-2-1
7	339689	DISTRIBUTOR	DISTRIBUIDOR	DISTRIBUTEUR
8	521294	DOUBLE ELECTROVALVE	ELECTROVALVULA DOS VIAS	ELECTROVANNE DOUBLE
	156265	REGULATOR 3 L/MIN (BLACK)	REGULADOR DE 3 L/MIN. (NEGRO)	REGULATEUR 3 L/MIN (NOIR)
	156257	REGULATOR 8 L/MIN (RED)	REGULADOR DE 8 L/MIN. (ROJO)	REGULATEUR 8 L/MIN (ROUGE)
	300194	YELLOW CASE 30053	ESTUCHE AMARILLO 30053	BOITE JAUNE 30053
	300202	INTEGRAL GUIDE-MEMBRANE 30696	MEMBRANA-GUIA INTEGRAL 30696 *	MEMBRANE-GUIDE INTEGRALE 30696
	332296	COIL 255043000000 12VCC	BOBINA 255043000000 12VCC	BOBINE 255043000000 12VCC
9	333682	ELECTROVALVE BRACKET	SOPORTE ELECTROVALVULAS	SUPPORT ELECTROVANNES
10	315309	FILTER BODY	CUERPO FILTRO	CORPS FILTRE
11	333690	FIG. 243 MI 1/2" BRASS	FIGURA 243 MI DE 1/2" LATON	FIG. 243 MI 1/2" LAITON
12	114348	GASKET D24XD13,5X2	JUNTA MIFLEX D24X13, 5X2 EPDM WRC 400105	JOINT D24XD13,5X2
13	155150	HOSE CLIP ASFA-L W2 8-16	ABRAZADERA ASFA-L W2 8-16	COLLIER ASFA-L W2 8-16
14	156109	CLAMP 16-27	ABRAZADERA 16- 27 *	BRIDE 16-27
15	341685	SPARE-PARTS KIT EV220A 12-14B	KIT REPUES.EV220A 12-14B *	KIT RECHANGES EV220A 12-14B
16	156679	CONICAL END-PIECE R-16 D10	TOPE CONICO REPRIMSA R-16 D10	BOUCHON CONIQUE R-16 D10
17	357624	CONICAL END-PECE R-16 D12	TOPE CONICO REPRIMSA R-16 D12	BOUCHON CONIQUE R-16 D12
18	333708	VALVE EV220A G12 042U4022	CUERPO VAL.EV220A G12 042U4022	VANNE EV220A G12 042U4022
19	410621	WATER INLET HOSE	TUBO ENTRADA AGUA	TUYAU ENTRÉE EAU

info@zipnasklade.ru
8(800)500-69-51

Nº	REF	DENOMINATION	DENOMINACIÓN	DENOMINATION
20	411363	WATER INLET HOSE	TUBO ENTRADA AGUA	TUBE ENTREE EAU
21	411397	WATER INLET HOSE	TUBO ENTRADA AGUA	TUBE ENTREE EAU
22	427195	WATER INLET HOSE	TUBO ENTRADA AGUA	TUBE ENTREE EAU
23	432641	WATER INLET HOSE	TUBO ENTRADA AGUA	TUBE ENTREE EAU
24	432658	WATER INLET HOSE	TUBO ENTRADA AGUA	TUBE ENTREE EAU
25	432666	WATER INLET HOSE	TUBO ENTRADA AGUA	TUBE ENTREE EAU

info@zipnasklade.ru
8(800)500-69-51

REM033 CCAT
REM040 CCAT
Pag. 09

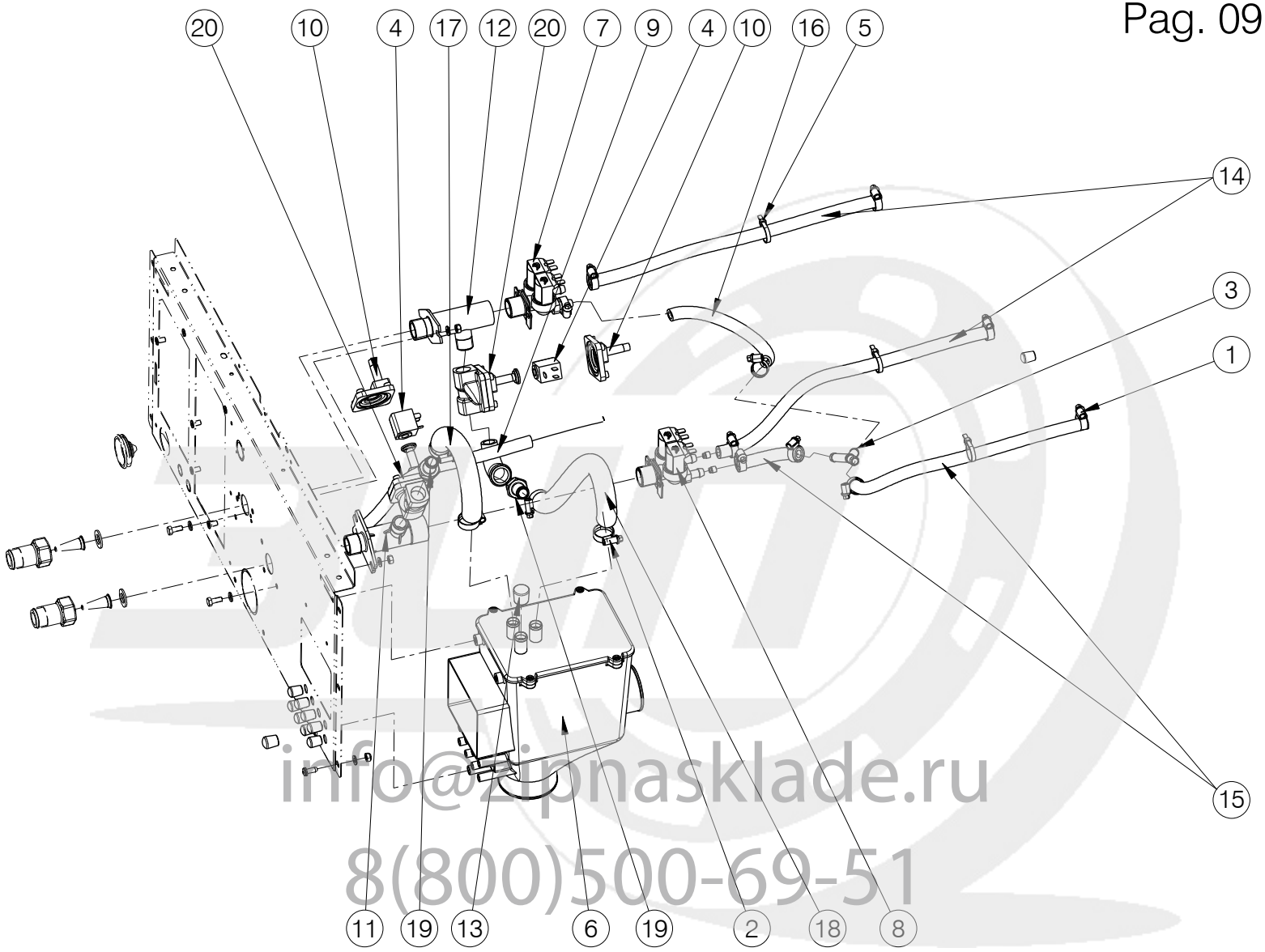

info@zipnasklade.ru
8(800)500-69-51

Nº	REF	DENOMINATION	DENOMINACIÓN	DENOMINATION
1	155150	HOSE CLIP ASFA-L W2 8-16	ABRAZADERA ASFA-L W2 8-16	COLLIER ASFA-L W2 8-16
2	156109	CLAMP 16-27	ABRAZADERA 16- 27 *	BRIDE 16-27
3	152165	BRANCH	BIFURCACION	BIFURCATION
4	333716	COIL AB 5W 12V CC 042N0806	BOBINA AB 5W 12V CC 042N0806	BOBINE AB 5W 12V CC 042N0806
5	140525	CLAMP 2244-0	BRIDA UNEX 2244-0 *	BRIDE 2244-0
6	333658	DISTRIBUTOR	DISTRIBUIDOR	DISTRIBUTEUR
7	511089	DOUBLE ELECTROVALVE	ELECTROVALVULA DOS VIAS	ELECTROVANNE DOUBLE
	510933	REGULATOR 4 L/MIN.RED	REGULADOR DE 4L/MIN.ROJO CLARO	REGULATEUR 4 L/MIN ROUGE
	300194	YELLOW CASE 30053	ESTUCHE AMARILLO 30053	BOITE JAUNE 30053
	300202	INTEGRAL GUIDE-MEMBRANE 30696	MEMBRANA-GUIA INTEGRAL 30696 *	MEMBRANE-GUIDE INTEGRALE 30696
	332296	COIL 255043000000 12VCC	BOBINA 255043000000 12VCC	BOBINE 255043000000 12VCC
8	521294	DOUBLE ELECTROVALVE	ELECTROVALVULA DOS VIAS	ELECTROVANNE DOUBLE
	156265	REGULATOR 3 L/MIN (BLACK)	REGULADOR DE 3 L/MIN. (NEGRO)	REGULATEUR 3 L/MIN (NOIR)
	156257	REGULATOR 8 L/MIN (RED)	REGULADOR DE 8 L/MIN. (ROJO)	REGULATEUR 8 L/MIN (ROUGE)
	300194	YELLOW CASE 30053	ESTUCHE AMARILLO 30053	BOITE JAUNE 30053
	300202	INTEGRAL GUIDE-MEMBRANE 30696	MEMBRANA-GUIA INTEGRAL 30696 *	MEMBRANE-GUIDE INTEGRALE 30696
	332296	COIL 255043000000 12VCC	BOBINA 255043000000 12VCC	BOBINE 255043000000 12VCC
9	129494	ELBOW FIG 92 1/2" GALV	FIGURA 92 DE 1/2"AMAT GALV.	COUDE FIG 92 1/2" GALV
10	341685	SPARE-PARTS KIT EV220A 12-14B	KIT REPUES.EV220A 12-14B *	KIT RECHANGES EV220A 12-14B
11	333682	ELECTROVALVE BRACKET	SOPORTE ELECTROVALVULAS	SUPPORT ELECTROVANNES
12	552133	ELECTROVALVE BRACKET	SOPORTE ELECTROVALVULAS	SUPPORT ELECTROVANNES
13	156687	CONICAL END-PIECE R-16 D16	TOPE CONICO REPRIMSA R-16 D16	ARRET CONIQUE R-16 D16
14	411371	WATER INLET HOSE	TUBO ENTRADA AGUA	TUBE ENTREE EAU
15	432641	WATER INLET HOSE	TUBO ENTRADA AGUA	TUBE ENTREE EAU
16	432658	WATER INLET HOSE	TUBO ENTRADA AGUA	TUBE ENTREE EAU
17	432666	WATER INLET HOSE	TUBO ENTRADA AGUA	TUBE ENTREE EAU
18	432690	WATER INLET HOSE	TUBO ENTRADA AGUA	TUBE ENTREE EAU
19	333690	FIG. 243 MI 1/2" BRASS	FIGURA 243 MI DE 1/2" LATON	FIG. 243 MI 1/2" LAITON

info@zipnasklade.ru
8(800)500-69-51

Nº	REF	DENOMINATION	DENOMINACIÓN	DENOMINATION
20	333708	VALVE EV220A G12 042U4022	CUERPO VAL.EV220A G12 042U4022	VANNE EV220A G12 042U4022

info@zipnasklade.ru
8(800)500-69-51

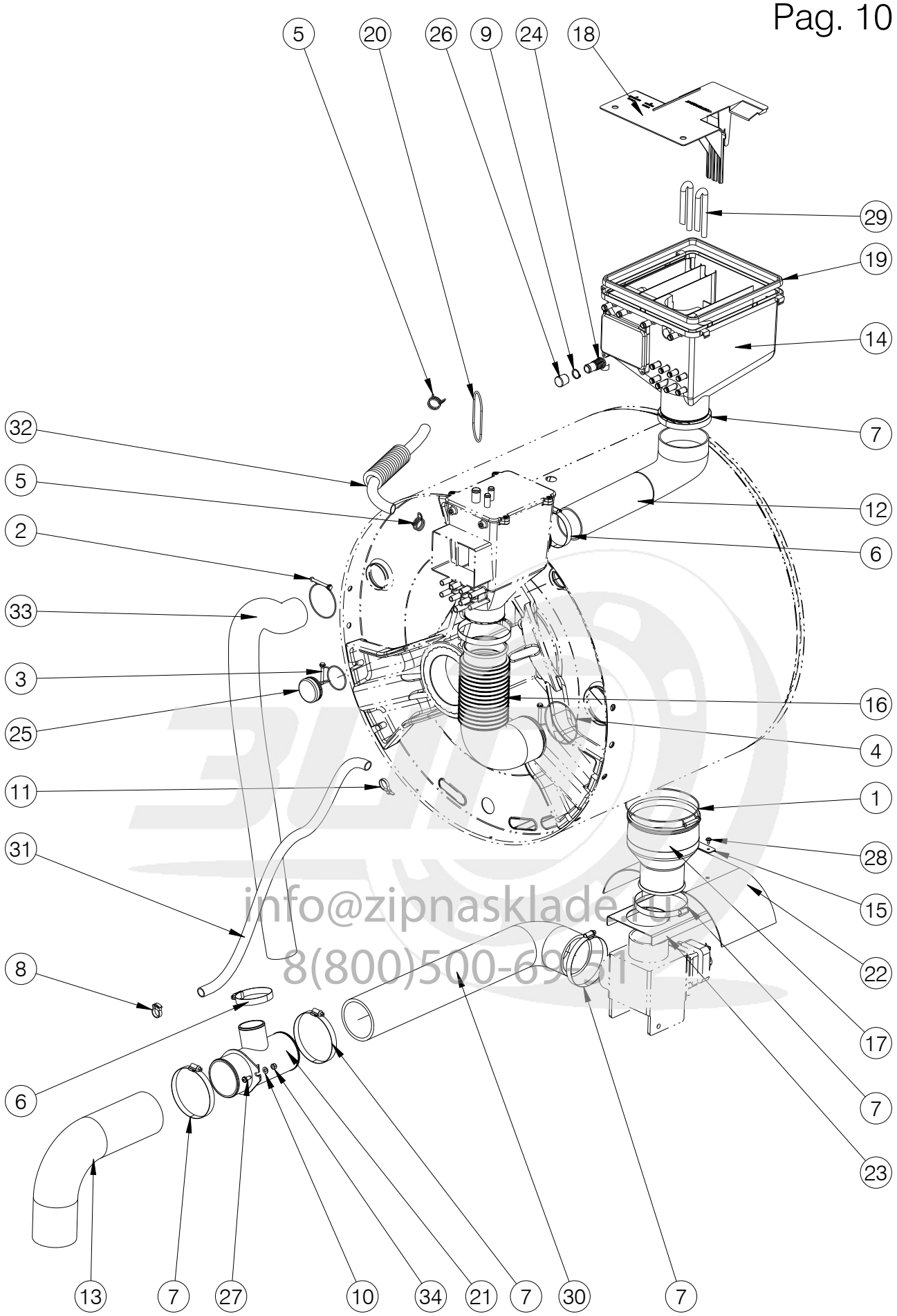

info@zipnasklade.ru
8(800)500-69-31

Nº	REF	DENOMINATION	DENOMINACIÓN	DENOMINATION
1	333450	WASHER D137XD2	ABRAZ.ALAMBRE D137XD2	RONDELLE D137XD2
2	340505	WASHER SWHCFS 5850	ABRAZ.ALAMBRE SWHCFS 5850	RONDELLE SWHCFS 5850
3	350439	WASHER SWHCFS 4942	ABRAZ.ALAMBRE SWHCFS 4942	RONDELLE SWHCFS 4942
4	333443	WASHER SWHCFS 8780	ABRAZ.ALAMBRE SWHCFS 8780	RONDELLE SWHCFS 8780
5	338897	CLAMP 20,2	ABRAZ. F.I.M. 20202 B20,2	BRIDE 20,2
6	132290	CLAMP 301730-8 D50-70	ABRAZADERA 301730-8 D50- 70	BRIDE 301730-8 D50-70
7	132340	CLAMP REF.30173380-2 D80-100	ABRAZADERA REF.30173380-2 D80-100	BRIDE REF.30173380-2 D80-100
8	323675	CLAMP NORMA 22HC0593	ABRAZADERA NORMA 22HC0593	COLLIER NORMA 22HC0593
9	131508	FLEXIBLE RING E-17 DIN 471	ANILLO ELASTICO E-17 DIN 471	BAGUE ELASTIQUE E-17 DIN 471
10	149526	BICR.WASHER B DIN125-ST 6,4	ARAN.B DIN125-ST B.TRI. 6,4	RONDELLE B DIN125-ST BICR.6,4
11	140525	CLAMP 2244-0	BRIDA UNEX 2244-0 *	BRIDE 2244-0
12	428110	RUBBER ELBOW 313X67	CODO GOMA 313 X 67	COUDE GOMME 313X67
13	163253	DRAIN OUTLET HOSE	TUBO SALIDA DESAGÜE	TUBE SORTIE VIDANGE
14	511584	SOAP DISPENSER SET	CONJUNTO DOSIFICADOR	ENSEMBLE BAC A PRODUITS
15	431700	DRAIN PROTECTION FIXING-PIECE (RMS613)	FIJACION PROTECCION DESAGÜE (RMS613)	FIXATION PROTECTION VIDANGE (RMS613)
16	340943	OUTERDRUM COLLECTOR BELLOWS	FUELLE COLECTOR ENVOLVENTE	DURITE COLLECTEUR CUVE
17	344218	OUTERDRUM DRAIN BELLOWS	FUELLE DESAGUE ENVOLVENTE	DURITE VIDANGE CUVE
18	344101	SOAP DOSING INSERTO (REM030) (COIN CTRL MODELS ONLY)	INSERTO DOSIFICADOR (REM033) (PARA MODELOS A COIN CONTROL)	INSERTO BAC A PRODUITS (REM030) (POUR MODELE COIN CONTROL)
19	321430	SOAP DISPENSER GASKET	JUNTA DOSIFICADOR	JOINT BACS A PRODUITS
20	159681	TORIC GASKET 50X56X3 RE.2676	JUNTA TORICA 50X56X3 RE.2676	JOINT TORIQUE 50X56X3 REF.2676
21	333575	DRAIN SLEEVE	MANGUITO DESAGÜE	FRETTE VIDANGE
22	431692	DRAIN COIL PROTECTION (RMS613)	PROTECCION BOBINA DESAGÜE (RMS613)	PROTECTION BOBINE VIDANGE (RMS613)
23	423228	DRAIN PROTECTION	PROTECCION DESAGÜE	PROTECTION VIDANGE
24	321349	WATER INLET RACCORD	RACOR ENTRADA AGUA DIRECTA	RACCORD ENTREE EAU
25	349902	RUBBER PLUG D42	TAPON GOMA D42	BOUCHON GOMME D42
26	156687	CONICAL END-PIECE R-16 D16	TOPE CONICO REPRIMSA R-16 D16	ARRET CONIQUE R-16 D16

info@zipnasklade.ru
8(800)500-69-51

Nº	REF	DENOMINATION	DENOMINACIÓN	DENOMINATION
27	333625	SCREW T25 A18EST.M6X15 TRI.	TOR.ALOM.T25 A18EST.M6X15 TRI.(ESPECIAL)	VIS T25 A18EST.M6X15 TRI.
28	183400	PLATE SCREW ST-4, 20 P.F. C/AL.T25 (RMS613)	TORNILLO CHAPA ST-4 (ESPECIAL)* (RMS613)	VIS PLAQUE ST-4, 20 P.F. C/AL.T25 (RMS613)
29	339598	ASPIRATION HOSE	TUBO ASPIRACION	TUBE ASPIRATION
30	588533	DRAIN HOSE	TUBO DESAGUE	TUBE VIDANGE
31	283820	BEARING BOX DRAIN HOSE	TUBO DESAGÜE CAJA COJINETES	TUBE VIDANGE BOITE ROULEMENTS
32	338889	VAPOUR OUTLET HOSE	TUBO DESVAPORIZADOR	TUBE SORTIE CONDENSATS
33	432765	OVERFLOW HOSE	TUBO REBOSADERO	TUBE DEVERSOIR
34	176834	SELF-LOCKING NUT DIN985-8 B.TRI.M6	TUER.AUTOBL.DIN985-8 B.TRI.M6	ECROU AUTOBLOCANT DIN985-8 B.TRI.M6
		WITHOUT ILLUSTRATION	SIN ILUSTRACION	SANS ILLUSTRATION
	796870	SIPHON CLEANING KIT	KIT LIMPIEZA SIFONES	KIT NETTOYAGE SIPHON

info@zipnasklade.ru
8(800)500-69-51

RMS613/RMS617 LC/LP
RMG613/RMG617 LP
Pag. 11

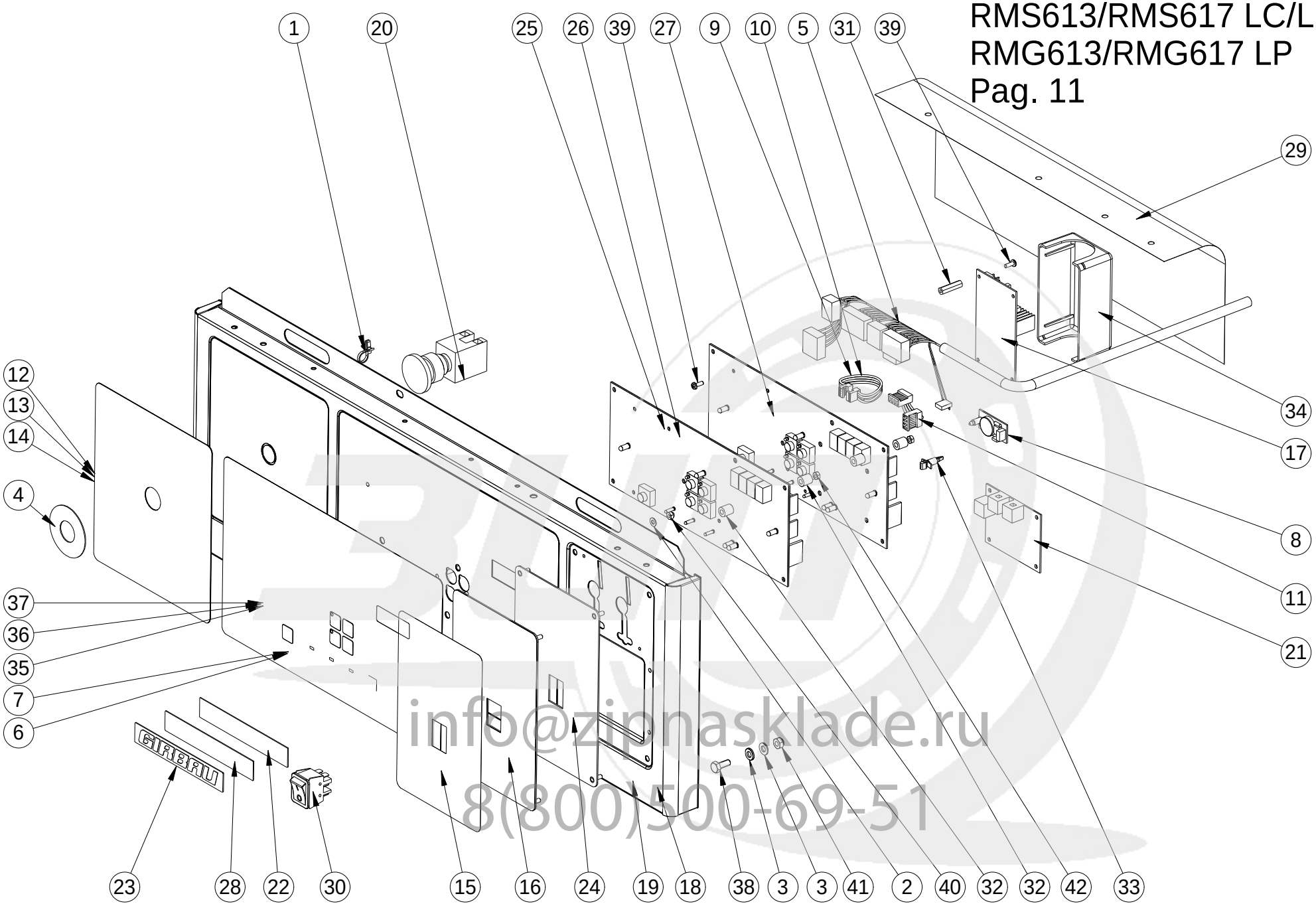

info@zipnasklade.ru
8(800)500-69-51

Nº	REF	DENOMINATION	DENOMINACIÓN	DENOMINATION
1	326132	CABLE TIE Ø35 NATURAL	ABRAZADERA Ø35 NATURAL	BRIDE Ø35 NATUREL
2	149476	BICR.WASHER B DIN125-ST 4,3	ARAN.B DIN125-ST B.TRI. 4,3	RONDELLE B DIN125-ST BICR.4,3
3	149526	BICR.WASHER B DIN125-ST 6,4	ARAN.B DIN125-ST B.TRI. 6,4	RONDELLE B DIN125-ST BICR.6,4
4	192294	YELLOW RING	ARO AMARILLO	BAGUE JAUNE
5	568410	ELECTRIC WIRING MS-MG	CABLEADO ELECTRICO RMS-RMG	CABLAGE ÉLECTRIQUE MS-MG
6	303719	WASHER-EXTRACTOR PLATE LC EN (LOGI CTRL MODELS ONLY) (FOR USA AND CANADA ONLY)	CARATULA LAVADORA LC EN (PARA MODELOS A LOGI CONTROL) (SOLO PARA USA Y CANADA)	PLAQUE LAVEUSE LC EN (POUR MODELE LOGI CONTROL) (SEULEMENT POUR USA ET CANADA)
7	342865	WASHER-EXTRACTOR PLATE LC JA (LOGI CTRL MODELS ONLY) (JAPENESE)	CARATULA LAVADORA LC JA (PARA MODELOS A LOGI CONTROL) (JAPONES)	PLAQUE LAVEUSE LC JA (POUR MODELE LOGI CONTROL) (JAPONAIS)
8	322677	CLOCK CIRCUIT	CIRCUITO RELOJ	CIRCUIT HORLOGE
9	432450	IDENTIFICATION PLUG (RMS613)	CONECTORA IDENTIFICACION (RMS613)	CONNECTEUR IDENTIFICATION (RMS613)
10	542266	IDENTIFICATION PLUG (RMG613)	CONECTORA IDENTIFICACION (RMG613)	CONNECTEUR IDENTIFICATION (RMG613)
11	342451	INSTALLATION PLUG	CONECTORA INSTALACION	CONNECTEUR INSTALLATION
12	338020	SAFETY INSTR.LABEL EN (FOR USA AND CANADA ONLY)	ETIQUETA INSTR. SEGURIDAD EN (SOLO PARA USA Y CANADA)	ETIQUETTE INSTR.SECURITE EN (SEULEMENT POUR USA ET CANADA)
13	343046	SAFETY INSTR.LABEL JA (JAPENESE)	ETIQUETA INSTR. SEGURIDAD JA (JAPONES)	ETIQUETTE INSTR.SECURITE JA (JAPONAIS)
14	10699163	LABEL	ETIQUETA	ÉTIQUETTE
15	587816	START-STOP LABEL	ETIQUETA MARCHA-PARO	ETIQUETTE MARCHE-ARRET
16	590356	START-STOP LABEL JA (JAPENESE)	ETIQUETA MARCHA-PARO JA (JAPONES)	ETIQUETTE MARCHE-ARRET JA (JAPONAIS)
17	332718	POWER SOURCE MW PS-25-12	FUENTE ALIMENT.MW PS-25-12	FONT ALIMENT.MW PS-25-12
18	587360	CONTROL PANEL (RMG613)	PANEL DE MANDOS (RMG613)	PANNEAU COMMANDE (RMG613)
19	587386	CONTROL PANEL (RMS613)	PANEL DE MANDOS (RMS613)	PANNEAU COMMANDE (RMS613)
20	341529	EMERGENCY STOP LC	PARO EMERGENCIA LC	ARRET EMERGENCE LC
21	565895	COMMUNICATION BOARD COM-C *	PLACA COMUNICACIONES COM-C *	PLAQUE COMMUNICATIONS COM-C/609164
22	326082	PLATE CONTINENTAL GIRBAU	PLACA CONTINENTAL GIRBAU	PLAQUE CONTINENTAL GIRBAU
23	326074	PLATE GIRBAU	PLACA GIRBAU	PLAQUE GIRBAU

info@zipnasklade.ru
8(800)500-69-51

Nº	REF	DENOMINATION	DENOMINACIÓN	DENOMINATION
24	422998	SWITCH PLATE	PLACA INTERRUPTOR	PLAQUE INTERRUPTEUR
25	521849	PROCESSOR BOAR.HS/MS-6 LP (RMS613) (LOGI PRO MODELS ONLY)	PLACA MICROP.HS/MS-6 LP (RMS613) (PARA MODELOS A LOGI PRO)	PLAQUE MICRO.HS/MS-6 LP (RMS613) (POUR MODELE LOGI PRO)
26	540591	PROCESSOR BOARD.MG-6 LP (RMG613) (LOGI PRO MODELS ONLY)	PLACA MICROP.MG-6 LP (RMG613) (PARA MODELOS A LOGI PRO)	PLAQUE MICRO.MG-6 LP (RMG613) (POUR MODELE LOGI PRO)
27	594481	MICROP. BOARD MS-6 LC/CC (RMS613) (FOR MOD. LOGI/COIN CONTROL)	PLACA MICROP.MS-6 LC/CC (RMS613) (PARA MOD. LOGI/COIN CONTROL)	PLAQUE MICROP. MS-6 LC/CC (RMS613) (POUR MOD. LOGI/COIN CONTROL)
28	327023	PLATE VIKING	PLACA VIKING	PLAQUE VIKING
29	432575	MICRO BOARD PROTECTION	PROTECCION PLACA MICRO	PROTECTION PLAQUE MICRO
30	587519	SWITCH C1550AL	INTERRUPTOR C1550AL	INTERRUPTEUR C1550AL
31	322685	SEPARATOR HEX.HS6-8	SEPARADOR EXAGONAL HS6-8	SEPARATEUR HEX. HS6-8
32	587782	MICRO BOARD SPACER	SEPARADOR PLACA MICRO	SEPARATEUR PLAQUE MICRO
33	332809	CIRCUIT BRACKET LCBS-4-7-01	SOPORTE CIRCUITO LCBS-4-7-01	SUPPORT CIRCUIT LCBS-4-7-01
34	326843	MICROPROCESSOR PLATE COVER	TAPA PLACA MICROPROCESADOR	COUVERCLE PLAQUE MICROPROSSEUR
35	10034825	LC WASHER KEYBOARD (LOGI CTRL MODELS ONLY)	TECLADO LAVADORA LC (PARA MODELOS A LOGI CONTROL)	CLAVIER LAVEUSE LC (POUR MODELE LOGI CONTROL)
36	10034890	LP WASHER KEYBOARD (LOGI PRO MODELS ONLY)	TECLADO LAVADORA LP (PARA MODELOS A LOGI PRO)	CLAVIER LAVEUSE LP (POUR MODELE LOGI PRO)
37	550525	WASHER KEYBOARD LP USA BILINGUAL (LOGI PRO MODELS ONLY) (FOR USA AND CANADA ONLY)	TECLADO LAVADORA LP USA BILINGÜE (PARA MODELOS A LOGI PRO) (SOLO PARA USA Y CANADA)	CLAVIER LAVEUSE LP USA BILINGUE (POUR MODELE LOGI PRO) (SEULEMENT POUR USA ET CANADA)
38	146233	BICR.HEX SCREW DIN933-8 M6X15	TOR.EX.DIN933-8.8 B.TRI.M 6X15	VIS HEX DIN933-8.8 BICR.M6X15
39	322693	SCREW PT KN35X10 WN1412	TORNILLO PT KN35X10 WN1412 (ESPECIAL)	VIS PT KN35X10 WN1412
40	132043	SELF-LOCKING NUT DIN985-8 B.TRI.M 4	TUER.AUTOBL.DIN985-8 B.TRI.M 4	ECROU AUTOBLOCANT DIN985-8 B.TRI.M 4
41	176834	SELF-LOCKING NUT DIN985-8 B.TRI.M6	TUER.AUTOBL.DIN985-8 B.TRI.M6	ECROU AUTOBLOCANT DIN985-8 B.TRI.M6
42	150185	BICR.HEX.NUT DIN934-8 M4	TUER.EX.DIN934-8 B.TRI.M 4	ECROU HEX.DIN934-8 BICR.M4

info@zipnasklade.ru
8(800)500-69-51

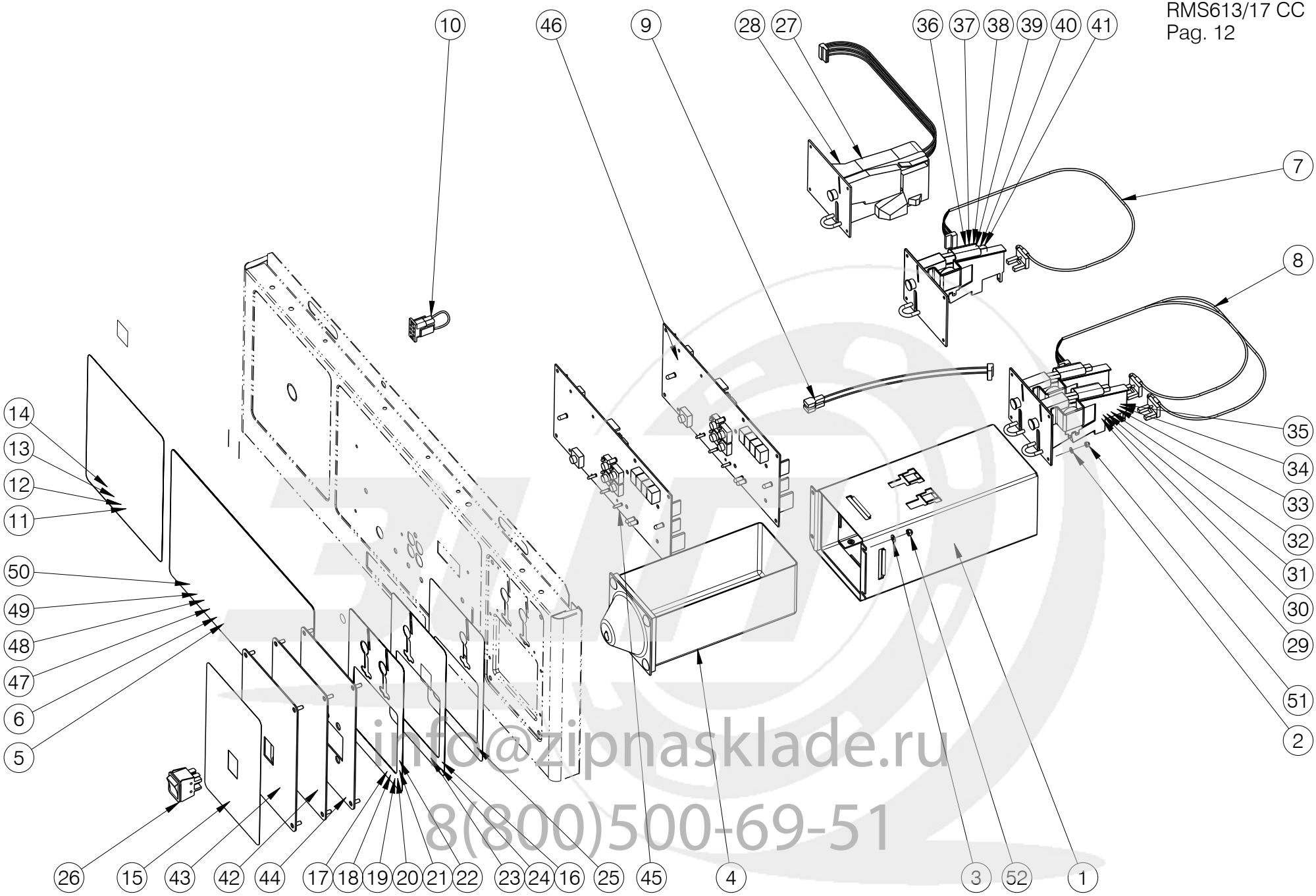

info@zipnasklade.ru
8(800)500-69-51

Nº	REF	DENOMINATION	DENOMINACIÓN	DENOMINATION
1	590570	COIN BOX SUPPORT	APOYO CAJON MONEDAS	APPUI BOITE MONNAIE
2	149484	WASHER DIN 125B M3 ST TRIVALENT	ARANDELA DIN 125B M3 ST TRIVALENTE	RONDELLE DIN 125B M3 ST TRIVALENT
3	149476	BICR.WASHER B DIN125-ST 4,3	ARAN.B DIN125-ST B.TRI. 4,3	RONDELLE B DIN125-ST BICR.4,3
4	591586	COIN BOX UG800C	CAJA MONEDAS UG800C *	BOITE MONNAIE UG800C
5	342857	WASHER-EXTRACTOR PLATE CC JA (JAPENESE)	CARATULA LAVADORA CC JA (JAPONES)	PLAQUE LAVEUSE CC JA (JAPONAIS)
6	10552263	WASHER-EXTRACTOR PLATE CC KO (ONLY KOREA)	CARATULA LAVADORA CC KO (SOLO COREA)	PLAQUE LAVEUSE CC KO (SEULEMENT CORÉE)
7	322461	COIN-METER 1 PLUG	CONECTORA 1 MONEDERO	CONNECTEUR 1 MONNAYEUR
8	322453	COIN-METER 2 PLUG	CONECTORA 2 MONEDERO	CONNECTEUR 2 MONNAYEURS
9	411678	COIN-METER PLUG (WITH PUSH-BUTTON)	CONECTORA MONEDERO (CON PULSADOR)	CONNECTEUR MONNAYEUR (AVEC BOUTON-POUSSOIR)
10	341990	EMERGENCY STOP PLUG	CONECTORA PARO EMERGENCIA	CONNECTEUR ARRET EMERGENCE
11	303693	SAFETY INSTR.LABEL EN (FOR USA AND CANADA ONLY)	ETIQUETA INSTR. SEGURIDAD EN (SOLO PARA USA Y CANADA)	ETIQUETTE INSTR.SECURITE EN (SEULEMENT POUR USA ET CANADA)
12	343053	SAFETY INSTR.LABEL JA (JAPENESE)	ETIQUETA INSTR. SEGURIDAD JA (JAPONES)	ETIQUETTE INSTR.SECURITE JA (JAPONAIS)
13	614677	SAFETY INSTR.LABEL KO (ONLY KOREA)	ETIQUETA INSTR. SEGURIDAD KO (SOLO COREA)	ETIQUETTE INSTR.SECURITE KO (SEULEMENT CORÉE)
14	10568681	LABEL	ETIQUETA	ÉTIQUETTE
15	429878	START-STOP LABEL CP (WITH PUSH-BUTTON)	ETIQUETA MARCHA-PARO CP (CON PULSADOR)	ETIQUETTE MARCHE-ARRET CP (AVEC BOUTON-POUSSOIR)
16	592733	COINMETER LABEL CC-MS-FG	ETIQUETA MONEDERO CC-MS-FG	ETIQUETTE MONNAYEUR CC-MS-FG
17	592808	COINMETER LABEL CC-MD EUR	ETIQUETA MONEDERO CC-MD EUR	ETIQUETTE MONNAYEUR CC-MD EUR
18	592790	COINMETER LABEL CC-MD GBP	ETIQUETA MONEDERO CC-MD GBP	ETIQUETTE MONNAYEUR CC-MD GBP
19	592782	COINMETER LABEL CC-MD NIS	ETIQUETA MONEDERO CC-MD NIS	ETIQUETTE MONNAYEUR CC-MD NIS
20	592774	COINMETER LABEL CC-MD NTD	ETIQUETA MONEDERO CC-MD NTD	ETIQUETTE MONNAYEUR CC-MD NTD
21	592717	COINMETER LABEL CC-MD USD	ETIQUETA MONEDERO CC-MD USD	ETIQUETTE MONNAYEUR CC-MD USD
22	592766	COINMETER LABEL CC-MD YEN	ETIQUETA MONEDERO CC-MD YEN	ETIQUETTE MONNAYEUR CC-MD YEN
23	592758	COINMETER LABEL CC-MS-25C	ETIQUETA MONEDERO CC-MS-25C	ETIQUETTE MONNAYEUR CC-MS-25C
24	592741	COINMETER LABEL CC-MS YEN	ETIQUETA MONEDERO CC-MS YEN	ETIQUETTE MONNAYEUR CC-MS YEN
25	592725	COINMETER LABEL CC-MU	ETIQUETA MONEDERO CC-MU	ETIQUETTE MONNAYEUR CC-MU

info@zipnasklade.ru
8(800)500-69-51

Nº	REF	DENOMINATION	DENOMINACIÓN	DENOMINATION
26	138339	PUSH-BUTTON C6061AL (WITH PUSH-BUTTON)	PULSADOR C6061AL * (CON PULSADOR)	BOUTON-POUSSOIR C6061AL (AVEC BOUTON-POUSSOIR)
27	327353	COIN-METER EMP 500 EUROS	MONEDERO EMP 500 EUROS	MANNAYEUR EMP 500 EUROS
28	411223	COIN-METER EMP 500 NOT EUROS	MONEDERO EMP 500 NO EUROS	MONNAYEUR EMP 500 NO EUROS
29	323741	COIN-METER F60.1 0,20/2,00EUR	MONEDERO F60.1 0,20/2,00EUR	MONNAYEUR F60.1 0,20/2,00EUR
30	326892	COIN-METER F60.1 0,25/1,00CAD	MONEDERO F60.1 0,25/1,00CAD	MONNAYEUR F60.1 0,25/1,00CAD
31	323659	COIN-METER F60.1 0,25/1,00USD	MONEDERO F60.1 0,25/1,00USD	MONNAYEUR F60.1 0,25/1,00USD
32	326769	COIN-METER F60.1 0,50/1,00 GBP	MONEDERO F60.1 0,50/1,00GBP *	MONNAYEUR F60.1 0,50/1,00 GBP
33	326835	COIN-METER F60.1 1,00/5,00ILS	MONEDERO F60.1 1,00/5,00ILS *	MONNAYEUR F60.1 1,00/5,00 ILS
34	431007	COINMETER F60.1 100/500 JPY	MONEDERO F60.1 100/500 JPY *	MONNAYEUR F60.1 100/500 JPY
35	354035	COINMETER F60.1 10/50 NTD	MONEDERO F60.1 10/50NTD *	MONNAYEUR F60.1 10/50 NTD
36	524157	COIN-METER F60.11 500 WON	MONEDERO F60.11 500 WON*	MONNAYEUR F60.11 500 WON
37	323642	COIN-METER F60.11 0,25USD	MONEDERO F60.11 0,25USD	MONNAYEUR F60.11 0,25USD
38	326777	COIN-METER F60.11 100YEN	MONEDERO F60.11 100YEN *	MONNAYEUR F60.11 100YEN
39	344622	COIN-METER F60.11 10NTD	MONEDERO F60.11 10NTD *	MONNAYEUR F60.11 10NTD
40	10098655	COIN METER F60.11 TOKEN ECO MALAYSIA (FOR SINGLE COIN METER) (FOR MOD. CC WITH COIN ECO MALAYSIA)	MONEDERO F60.11 FICHA ECO MALASIA (PARA MONEDERO SIMPLE) (PARA MOD. CC CON FICHA ECO MALASIA)	MONNAYEUR F60.11 JETON ECO MALASIA (POUR MONNAYEUR SIMPLE) (POUR MOD. CC AVEC MON. ECO MALASIA)
41	323733	COIN-METER F60.11W2000-TOKEN G	MONEDERO F60.11 FICHA GIRBAU *	MONNAYEUR F60.11W2000 JETON GI
42	428656	BLIND PLATE	PLACA CIEGA	PLAQUE AVEUGLE
43	422998	SWITCH PLATE	PLACA INTERRUPTOR	PLAQUE INTERRUPTEUR
44	433532	CARD READER PLATE	PLACA LECTOR TARJETA	PLAQUE LECTEUR CARTE
45	594473	MICROP. BOARD MG-6 LC/CC (RMG613) (COIN CTRL MODELS ONLY)	PLACA MICROP.MG-6 CC (RMG613) (PARA MODELOS A COIN CONTROL)	PLAQUE MICROP. MG-6 LC/CC (RMG613) (POUR MODELE COIN CONTROL)
46	594481	MICROP. BOARD MS-6 LC/CC (RMS613) (FOR MOD. LOGI/COIN CONTROL)	PLACA MICROP.MS-6 LC/CC (RMS613) (PARA MOD. LOGI/COIN CONTROL)	PLAQUE MICROP. MS-6 LC/CC (RMS613) (POUR MOD. LOGI/COIN CONTROL)
47	10017002	CC WASHER KEYBOARD	TECLADO LAVADORA CC	CLAVIER LAVEUSE CC
48	593517	COIN CONTROL EXTRA OP. WASHER KEYBOARD (FOR USA AND CANADA ONLY)	TECLADO LAVADORA CC EXTRA OP. (SOLO PARA USA Y CANADA)	CLAVIER LAVEUSE COIN CONTROL EXTRA OP. (SEULEMENT POUR USA ET CANADA)
49	10065480	CC EXTRA OP. WASHER KEYBOARD	TECLADO LAVADORA CC EXTRA OP.	CLAVIER LAVEUSE CC EXTRA OP.

info@zipnasklade.ru
8(800)500-69-51

Nº	REF	DENOMINATION	DENOMINACIÓN	DENOMINATION
50	10019461	CC EXTRA OP. WASHER KEYBOARD KO (ONLY KOREA)	TECLADO LAVADORA CC EXTRA OP. KO (SOLO COREA)	CLAVIER LAVEUSE CC EXTRA OP. KO (SEULEMENT CORÉE)
51	129692	SELF-LOCKING NUT DIN985-8 B.TRI.M 3	TUER.AUTOBL.DIN985-8 B.TRI.M 3	ECROU AUTOBLOCANT DIN985-8 B.TRI.M 3
52	132043	SELF-LOCKING NUT DIN985-8 B.TRI.M 4	TUER.AUTOBL.DIN985-8 B.TRI.M 4	ECROU AUTOBLOCANT DIN985-8 B.TRI.M 4
		WITHOUT ILLUSTRATION	SIN ILUSTRACION	SANS ILLUSTRATION
	796839	VENDING VN SERIE 6 SET	KIT VENDING VN SERIE 6	KIT VENDING VN SERIE 6
	630426	KIT PROFIT PLUS RMS613/17/23/HS-6024 (EXCEPT FOR USA AND CANADA)	KIT PROFIT PLUS RMS613/17/23/HS-6024 (EXCEPTO PARA USA Y CANADA)	KIT PROFIT PLUS RMS613/17/23/HS-6024 (SAUF POUR USA ET CANADA)
	630434	KIT PROFIT PLUS RMG613/17/23 (EXCEPT FOR USA AND CANADA)	KIT PROFIT PLUS RMG613/17/23 (EXCEPTO PARA USA Y CANADA)	KIT PROFIT PLUS RMG613/17/23 (SAUF POUR USA ET CANADA)
	639120	KIT PROFIT PLUS RMS613/17/23/HS-6024 KO (ONLY KOREA)	KIT PROFIT PLUS RMS613/17/23/HS-6024 KO (SOLO COREA)	KIT PROFIT PLUS RMS613/17/23/HS-6024 KO (SEULEMENT CORÉE)

info@zipnasklade.ru
8(800)500-69-51

RMS/RMG613/617
REM/RMG033/040
Pag. 13/1

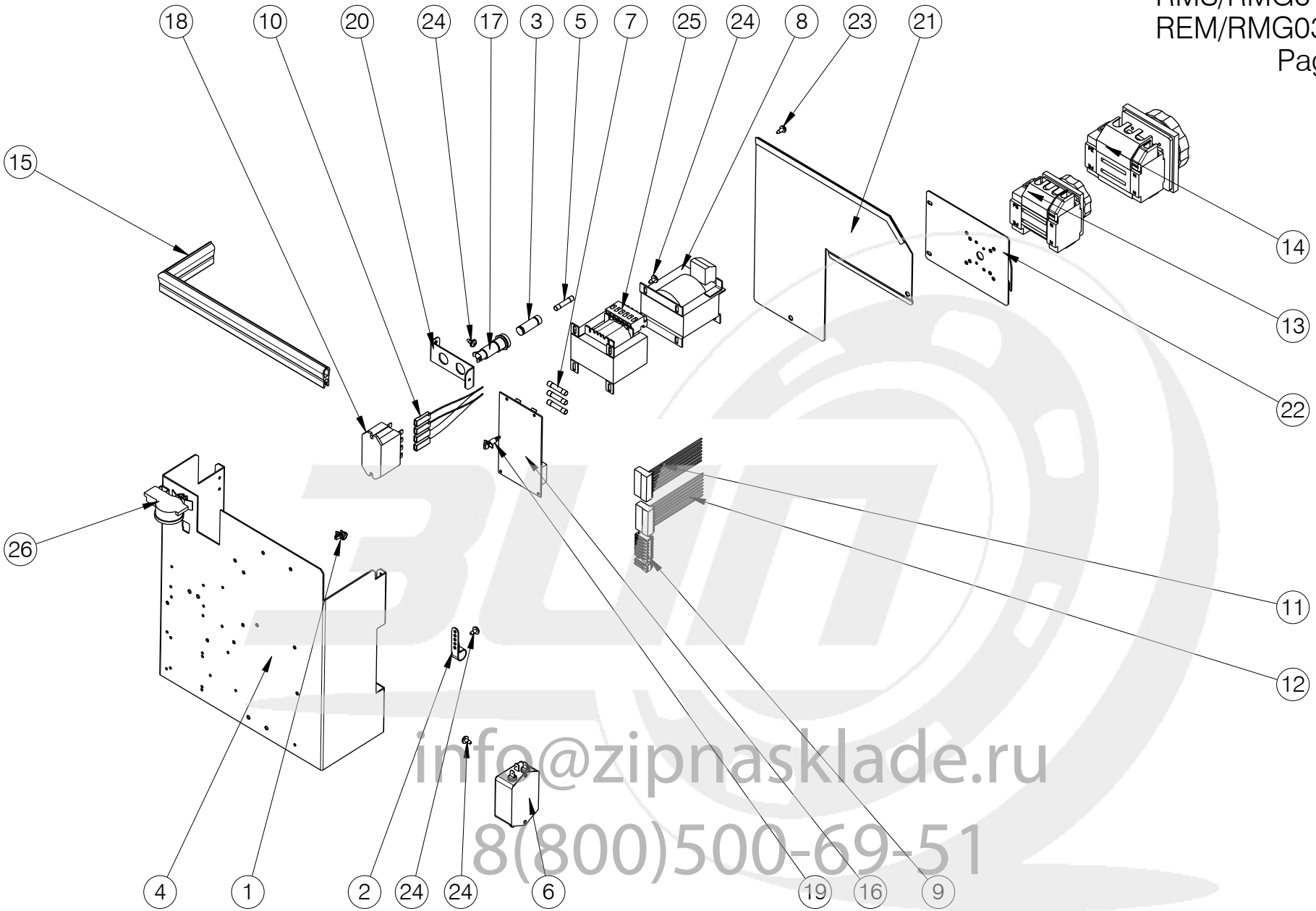

info@zipnasklade.ru
8(800)500-69-51

Nº	REF	DENOMINATION	DENOMINACIÓN	DENOMINATION
1	326132	CABLE TIE Ø35 NATURAL	ABRAZADERA Ø35 NATURAL	BRIDE Ø35 NATUREL
2	140418	CLAMP UNEX REF 1201	BRIDA UNEX 1201	BRIDE UNEX REF 1201
3	137661	BAYONET HEAD	CABEZA BAYONETA FEK.031.1613	TETE BAYONETTE
4	431098	POWER INLET BOX	CAJA ENTRADA CORRIENTE	BOITE ENTREE COURANT
5	326371	FUSE FST 8A	CART.FUSIB.FST 0034.5244 8 A*	CARTOUCHE FUSIBLE FST 8A
6	592246	FILTER TYPE FN2030-10-06 (RMS613)	FILTRO TIPO FN2030-10-06 (RMS613)	FILTRE TYPE FN2030-10-06 (RMS613)
	599084	CONNECTION-BOARD (REM030)	REGLETA PLANA (3 ELEMENTO) (REM033)	REGLETTE PLANE (REM030)
7	321125	FUSE SPT 1 A	CART.FUSIB.SPT 0001.2524 1 A*	CARTOUCHE FUS. SPT 1 A
8	593848	INDUCTANCE CSA 5A 4,5MH 50HZ	INDUCTANCIA CSA 5A 4,5MH *	INDUCTANCE CSA 5A 4,5MH 50HZ
9	522102	ELECTROVALVE ELEC.INST.	INST. ELEC. ELECTROVALVULAS	INST. ELEC. ELECTROVANNES
10	586594	ELECTRIC INST. FILTER-INLET	INST. ELEC. ENTRADA-FILTRO	INST. ELEC. ENTRÉE-FILTRE
11	342600	ELEC.INST. WITHOUT TRANSFORMER (REM030)	INST. ELEC. SIN TRANSFORMADOR (REM033)	INST.ELEC.SANS TRANSFORMATEUR (REM030)
12	341867	TRANSFORMER ELEC.INST. (RMS613)	INST. ELEC. TRANSFORMADOR (RMS613)	INST.ELEC.TRANSFORMATEUR (RMS613)
13	344176	SECTION SWITCH 32A (FOR MOD. HOT WATER/STEAM)	INTERRUPTOR SECCIONADOR 32A (PARA MOD.AGUA CALIENTE/VAPOR)	INTERRUPTEUR SECTIONNEUR 32A (POUR MOD.EAU CHAUDE/VAPEUR)
14	344168	SECTION SWITCH 63A (FOR MACHINES ELECTR.HEATING) (FOR SINGLE-PHASE) (FOR THREE-PHASE)	INTERRUPTOR SECCIONADOR 63A (PARA MODELOS CALEFAC.ELECTR.) (PARA MONOFASICO) (PARA TRIFASICO)	INTERRUPTEUR SECTIONNEUR 63A (POUR MACHINES CHAUF.ELECTR.) (POUR MONOPHASE) (POUR TRIPHASE)
15	431197	POWER INLET BOX PROFILE	PERFIL CAJA ENTRADA CORRIENTE	PROFILE BOITE ENTREE COURANT
16	332395	AUXILIARY BOARD HS-60**	PLACA AUXILIAR HS-60**	PLAQUE AUXILIAIRE HS-60**
17	160119	FUSE HOLDER REF.FEC 031 1631	PORTAFUSIBLES REF.FEC.031.1631	PORTE-FUSIBLE REF.FEC 031 1631
18	322701	RELAY 12VDC	RELE 12VDC*	RELAIS 12VDC
19	332809	CIRCUIT BRACKET LCBS-4-7-01	SOPORTE CIRCUITO LCBS-4-7-01	SUPPORT CIRCUIT LCBS-4-7-01
20	542654	FUSE BRACKET	SOPORTE FUSIBLES	SUPPORT FUSIBLES
21	431684	POWER INLET COVER	TAPA ENTRADA CORRIENTE	COUVERCLE ENTREE COURANT
22	431114	SELECTOR COVER	TAPA SELECTOR	COUVERCLE SELECTEUR
23	328229	SCREW ALO.T25 AR.18ESTR.M 4X10	TORNILLO ALOM.T25 M 4X10 (ESPECIAL)*	VIS ALOM.T25 AR.18ESTR.M 4X10

info@zipnasklade.ru
8(800)500-69-51

Nº	REF	DENOMINATION	DENOMINACIÓN	DENOMINATION
24	183400	PLATE SCREW ST-4, 20 P.F. C/AL.T25	TORNILLO CHAPA ST-4 (ESPECIAL)*	VIS PLAQUE ST-4, 20 P.F. C/AL.T25
25	320614	TRANSFORMER IP00 100 VA CSA	TRANSFORMADOR IP00 100 VA CSA*	TRANSFORMATEUR IP00 100 VA CSA
26	322784	PRESSURE TRANSMITTER 400.95100	TRANSM.PRESION HUBA 400.95100	PRESSOSTAT HUBA 400.95100

info@zipnasklade.ru
8(800)500-69-51

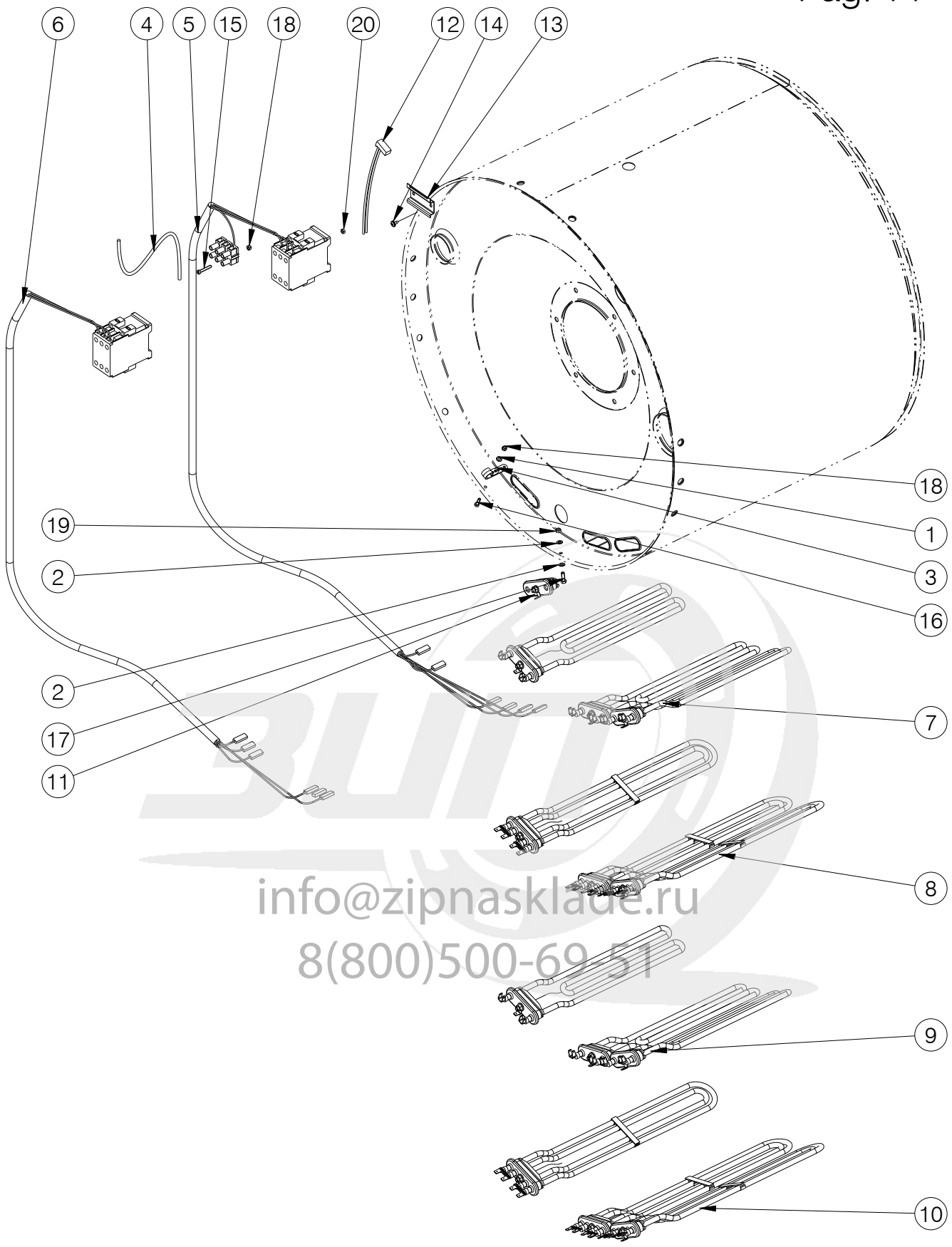

info@zipnasklade.ru
8(800)500-69-51

Nº	REF	DENOMINATION	DENOMINACIÓN	DENOMINATION
1	149476	BICR.WASHER B DIN125-ST 4,3	ARAN.B DIN125-ST B.TRI. 4,3	RONDELLE B DIN125-ST BICR.4,3
2	149534	BICR.WASHER B DIN125-ST 5,3	ARAN.B DIN125-ST BICR. 5,3	RONDELLE B BICR.DIN125-ST 5,3
3	140418	CLAMP UNEX REF 1201	BRIDA UNEX 1201	BRIDE UNEX REF 1201
4	341941	CONTACTOR SUPPLY WIRES	CABLES ALIMENTACION CONTACTOR	CABLES ALIMENTATION CONTACTEUR
5	341834	HEATING CONTACTOR WIRES (FOR SINGLE-PHASE)	CABLES CONTACTOR CALEFACCION (PARA MONOFASICO)	CABLES CONTACTEUR CHAUFFAGE (POUR MONOPHASE)
6	341826	HEATING CONTACTOR WIRES (FOR THREE-PHASE)	CABLES CONTACTOR CALEFACCION (PARA TRIFASICO)	CABLES CONTACTEUR CHAUFFAGE (POUR TRIPHASE)
7	342642	HEATER 230V 3000W (FOR 200V-208V-220V-230V-380V-400V)	CALEFACTOR 230V 3000W (PARA 200V-208V-220V-230V-380V-400V)	RESISTANCE 230V 3000W (POUR 200V-208V-220V-230V-380V-400V)
8	340851	HEATER 230V 4000W (FOR 200V-208V-220V-230V-380V-400V)	CALEFACTOR 230V 4000W (PARA 200V-208V-220V-230V-380V-400V)	RESISTANCE 230V 4000W (POUR 200V-208V-220V-230V-380V-400V)
9	342659	HEATER 240V 3000W (FOR 240 AND 415V) (REM030) (FOR (208÷240)V)	CALEFACTOR 240V 3000W (PARA 240 Y 415V) (REM033) (PARA (208÷240)V)	RESISTANCE 240V 3000W (POUR 240 ET 415V) (REM030) (POUR (208÷240)V)
10	340869	HEATER 240V 4000W (FOR 240 AND 415V) (REM030) (FOR (208÷240)V)	CALEFACTOR 240V 4000W (PARA 240 Y 415V) (REM033) (PARA (208÷240)V)	RESISTANCE 240V 4000W (POUR 240 ET 415V) (REM030) (POUR (208÷240)V)
11	121962	HEATER INLET LID	CIERRE ENTRADA CALEFACTOR *	FERMETURE ENTREE RESISTANCE
12	341966	HEATING RELAY ELEC.INST.	INST. ELEC. RELE CALEFACCION	INST.ELEC.RELAIS CHAUFFAGE
13	431106	CONTACTOR FIXING PROFILE (REM030) (FOR MACHINES ELECTR.HEATING)	PERFIL FIJACION CONTACTORES (REM033) (PARA MODELOS CALEFAC.ELECTR.)	PROFILE FIXATION CONTACTEURS (REM030) (POUR MACHINES CHAUF.ELECTR.)
14	183400	PLATE SCREW ST-4, 20 P.F. C/AL.T25	TORNILLO CHAPA ST-4 (ESPECIAL)*	VIS PLAQUE ST-4, 20 P.F. C/AL.T25
15	146183	BICR CYL SCREW DIN 84 M-4X25	TOR.CIL.DIN84-4.8 B.TRI.M 4X25	VIS CYL BICR DIN 84 M-4X25
16	146266	BICR.HEX SCREW DIN933-8 M-4X15	TOR.EX.DIN933-4.8 B.TRI.M 4X15	VIS HEX BICR.DIN933-8.8 M-4X15
17	146282	BICR.HEX SCREW DIN933-8 M 5X15	TOR.EX.DIN933-8.8 B.TRI.M 5X15	VIS HEX BICR.DIN933-8.8 M 5X15
18	132043	SELF-LOCKING NUT DIN985-8 B.TRI.M 4	TUER.AUTOBL.DIN985-8 B.TRI.M 4	ECROU AUTOBLOCANT DIN985-8 B.TRI.M 4
19	176826	SELF-LOCKING NUT DIN985-8 B.TRI.M5	TUER.AUTOBL.DIN985-8 B.TRI.M5	ECROU AUTOBLOCANT DIN 985-8 B.TRI.M5
20	150185	BICR.HEX.NUT DIN934-8 M4	TUER.EX.DIN934-8 B.TRI.M 4	ECROU HEX.DIN934-8 BICR.M4

info@zipnasklade.ru
8(800)500-69-51

Nº	REF	DENOMINATION	DENOMINACIÓN	DENOMINATION
		WITHOUT ILLUSTRATION ELECTRIC HEATING KITS	SIN ILUSTRACION KITS CALEFACCION ELECTRICA	SANS ILLUSTRATION KITS CHAUFFAGE ELECTRIQUE
	796888	ELEC.HEATING KIT 1PH 20-230V (FOR 200,208,220 AND 230V)	KIT CAL.E.1PH 200-230V (PARA 200,208,220 Y 230V)	KIT CHAUFF.ELEC.1PH 200-230V (POUR 200,208,220 ET 230V)
	796896	EL.HEAT.KIT 1PH(208-240)/240V (RMS613) (FOR 240V) (REM030) (FOR (208÷240)V)	KIT CAL.E.1PH(208-240)/240V (RMS613) (PARA 240V) (REM033) (PARA (208÷240)V)	KIT CHAUFF.EL.1PH(208-240)240V (RMS613) (POUR 240V) (REM030) (POUR (208÷240)V)
	796904	EL.HT.KIT 3PH 200-230/380-400V (FOR 200,208,220 AND 230V) (FOR 380V-400V)	KIT CAL.E.3PH 200-230/380-400V (PARA 200,208,220 Y 230V) (PARA 380V-400V)	KIT CH.EL.3PH 200-230/380-400V (POUR 200,208,220 ET 230V) (POUR 380V-400V)
	796912	EL.H.KIT 3PH(208-240)/240/415 (RMS613) (FOR 240 AND 415V) (REM030) (FOR (208÷240)V)	KIT CAL.E.3PH(208-240)/240/415 (RMS613) (PARA 240 Y 415V) (REM033) (PARA (208÷240)V)	KIT CH.EL.3PH(208-240)/240/415 (RMS613) (POUR 240 ET 415V) (REM030) (POUR (208÷240)V)

info@zipnasklade.ru
8(800)500-69-51

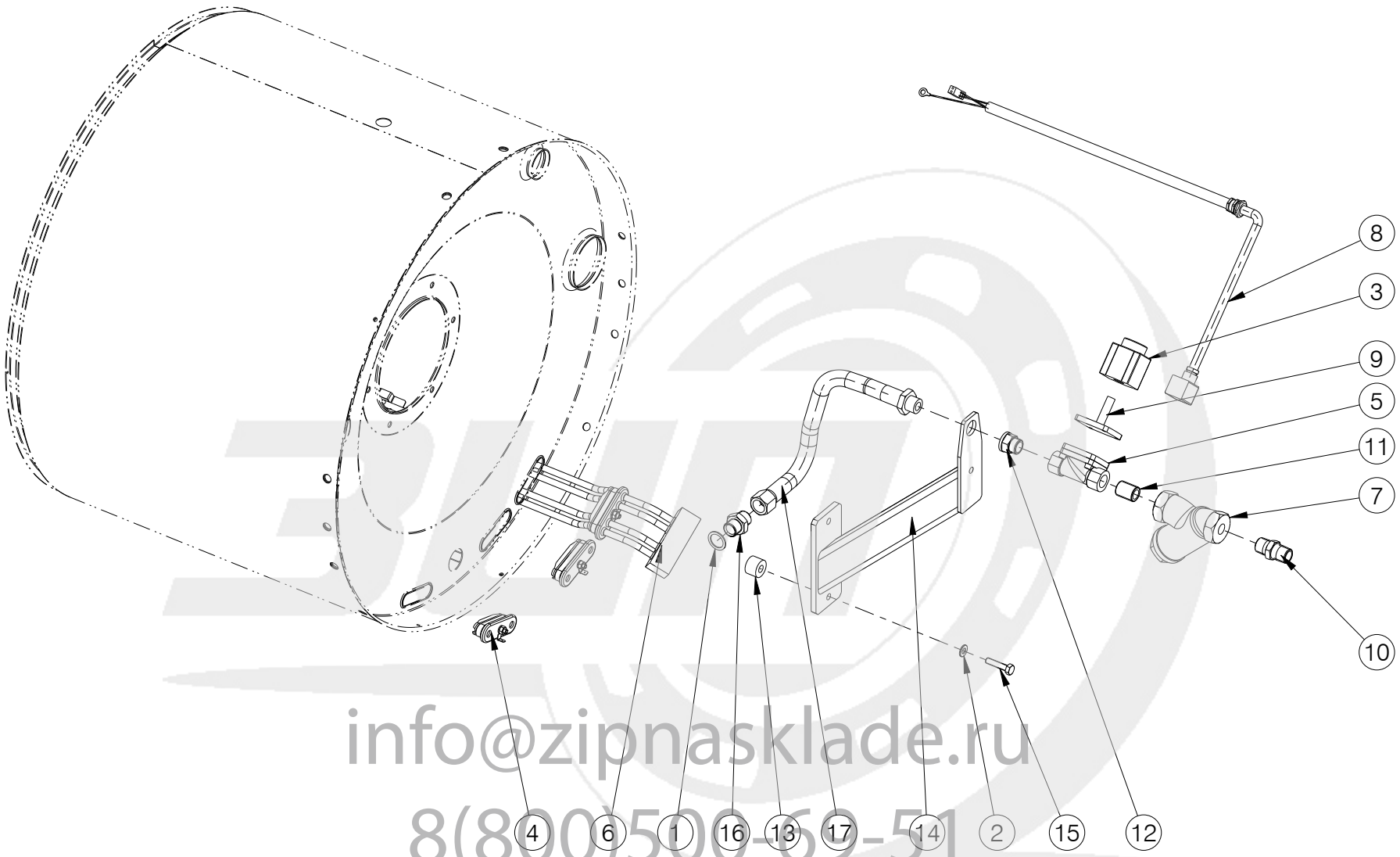

info@zipnasklade.ru
8(800)500-69-51

Nº	REF	DENOMINATION	DENOMINACIÓN	DENOMINATION
1	109777	COPPER GASKET 1/2"	12504 JUNTA COBRE 1/2"	JOINT CUIVRE 1/2"
2	149518	BICR.WASHER B DIN125-ST 8,4	ARAN.B DIN125-ST B.TRI. 8,4	RONDELLE.B DIN125-ST BICR.8,4
3	583385	STEAM VALVE COIL 208-240V 50/60Hz	BOBINA V.VAPOR 208-240V 50/60Hz *	BOBINE V. VAPEUR 208-240V 50/60Hz
4	121962	HEATER INLET LID (FOR MOD. HOT WATER/STEAM)	CIERRE ENTRADA CALEFACTOR * (PARA MOD.AGUA CALIENTE/VAPOR)	FERMETURE ENTREE RESISTANCE (POUR MOD.EAU CHAUDE/VAPEUR)
5	583369	STEAM VALVE BODY 1/2"	CUERPO VALV. VAPOR 1/2" *	CORPS VANNE VAPEUR 1/2"
6	108431	STEAM DISTRIBUTOR	DISTRIBUIDOR VAPOR	DISTRIBUTEUR VAPEUR
7	133728	STRAINER THREADED 1/2" O'3 PN16	FILTRO GG25 ROSC.1/2" PN16 0'3MM INOX	FILTRE FILETE 1/2" 0,3 PN16
8	341917	STEAM ELEC.INST.	INST. ELEC. VAPOR	INST.ELEC.VAPEUR
9	583393	SPARE KIT DANFOSS EV245B	KIT REPUES.DANFOSS EV245B *	KIT RECHANGE DANFOSS EV245B
10	251355	STEAM INLET SLEEVE (REM030)	MANGUITO ENTRADA VAPOR (REM033)	MANCHON ENTREE VAPEUR (REM030)
11	129999	FIG. 531 1/2" GALV	FIGURA 531 DE 1/2" GALV.	FIG. 531 1/2" GALV
12	183525	MALE-FEMALE SLEEVE 1/2"	MANGUITO MACHO-HEMBRA1/2"LATON	FRETTE MALE-FEMELLE 1/2"
13	261651	SEPARATOR 25X10,5X17,5	SEPARADOR 25X10,5X17,5	SEPARATEUR 25X10,5X17,5
14	440867	STEAM INLET BRACKET	SOPORTE ENTRADA VAPOR	SUPPORT ENTREE VAPEUR
15	191676	HEX SCREW 8G DIN933 M 8X 35	TOR.EX.DIN933-8.8 B.TRI.M 8X35	VIS HEX 8G DIN933 M 8X 35
16	156216	JOINTING SCREW 10903 1/2"	10903 TORNILLO UNION MM1/2"	VIS UNION 10903 1/2"
17	440826	STEAM INLET JOINTING	UNION ENTRADA VAPOR	UNION ENTREE VAPEUR
		WITHOUT ILLUSTRATION STEAM HEATING KITS	SIN ILUSTRACION KITS CALEFACCION VAPOR	SANS ILLUSTRATION KITS CHAUFFAGE VAPEUR
	628354	STEAM KIT RMS613/617	KIT CAL.VAPOR RMS613/617	KIT CHAUF. VAP. RMS613/617

info@zipnasklade.ru
8(800)500-69-51

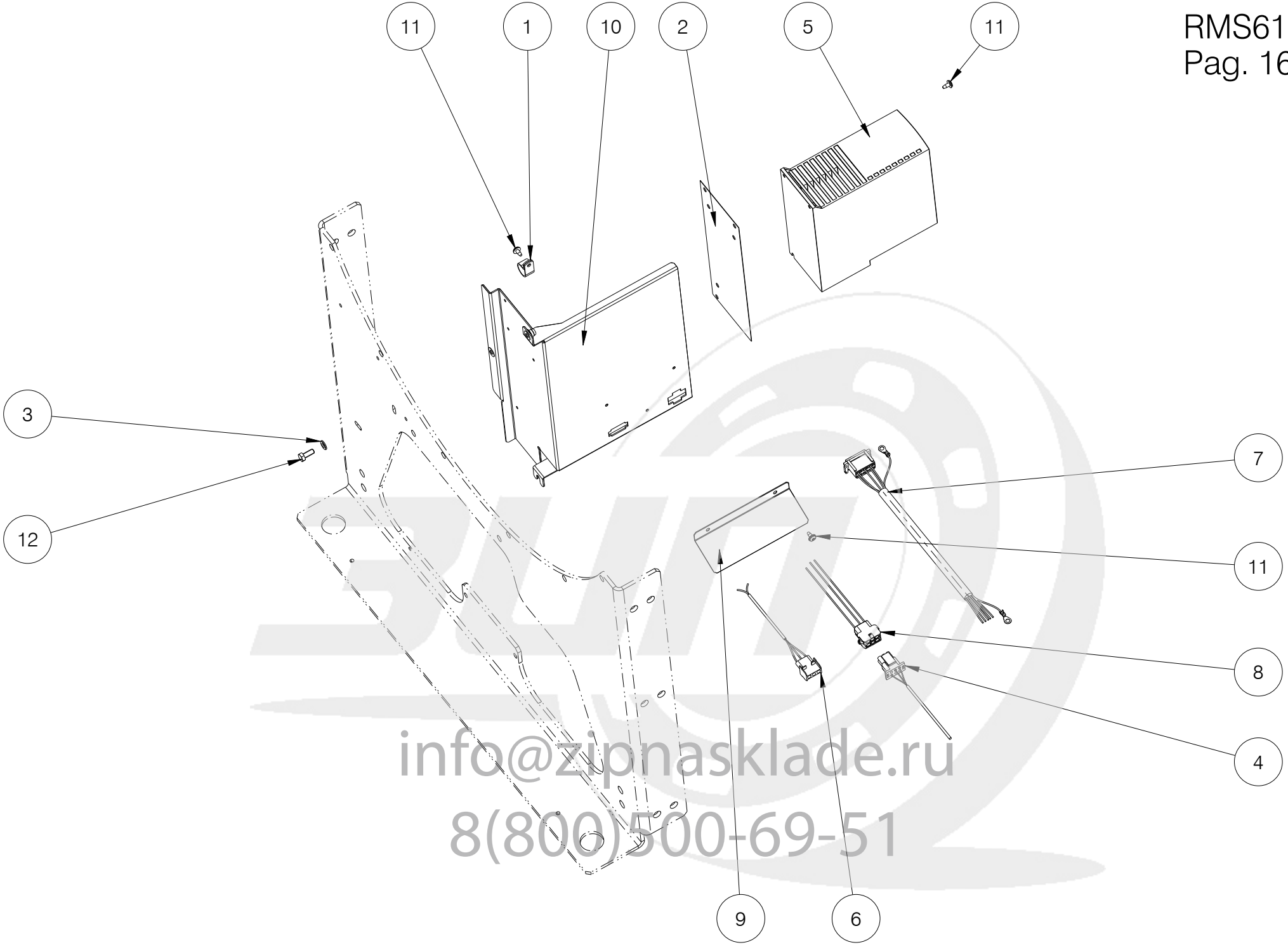

info@zipnasklade.ru
8(800)500-69-51

Nº	REF	DENOMINATION	DENOMINACIÓN	DENOMINATION
1	323055	ALUMINIUM CLAMP AL2	ABRAZADERA ALUMINIO AL2	BRIDE ALUMINIUM AL2
2	522565	CONVERTER ISOLATION (REM030)	AISLANTE CONVERTIDOR (REM033)	ISOLANT CONVERTISSEUR (REM030)
3	149526	BICR.WASHER B DIN125-ST 6,4	ARAN.B DIN125-ST B.TRI. 6,4	RONDELLE B DIN125-ST BICR.6,4
4	568444	FILTER INVERTER WIRES	CABLES FILTRO-CONVERTIDOR	CÂBLE FILTRE INVERTER
5	522110	FREQ.INVERTER VLT FC-051 1,5kW	VARIADOR VLT FC-051 1,5kW *	VARIATEUR FREQ.VLT FC-051 1,5kW
6	586560	COM. INVERTER ELEC. INST.	INST. ELEC.COM.CONVERTIDOR DST	INST. ELEC. COM. INVERTER
7	568428	MOTOR ELEC.INST.	INST. ELEC. MOTOR	INST.ELEC.MOTEUR
8	586602	INVERTER INPUT ELEC. INST. (RMS613)	INST. ELEC. ALIM. CONVERTIDOR DST (RMS613)	INST. ELEC. ENTRÉE INVERTER (RMS613)
	595769	ALIM. INVERTER ELEC. INST. (REM030)	INST. ELEC. ALIM.CONVERTIDOR DST (REM033)	INST. ELEC. ALIM. INVERTER (REM030)
9	594440	CONNECTORS PROTECTION	PROTECCION CONECTORES	PROTECTEUR CONNECTEURS
10	587667	INVERTER BRACKET	SOPORTE VARIADOR	SUPPORT INVERTER
11	183400	PLATE SCREW ST-4, 20 P.F. C/AL.T25	TORNILLO CHAPA ST-4 (ESPECIAL)*	VIS PLAQUE ST-4, 20 P.F. C/AL.T25
12	146233	BICR.HEX SCREW DIN933-8 M6X15	TOR.EX.DIN933-8.8 B.TRI.M 6X15	VIS HEX DIN933-8.8 BICR.M6X15

info@zipnasklade.ru
8(800)500-69-51