Mod.	From serial no. A partir máq. nº
RMS610	2.021.768
REM025	1.371.562

Parts Handbook for Washers
Manual de Recambios para lavadoras
Notice Vues Eclatées pour laveuses

RMS610
REM025

info@zipnasklade.ru
8(800)500-69-51

GIRBAU, S.A.
Crta de Manlleu, km. 1
08500 VIC (Barcelona) • SPAIN
Tel. 34 93 8861100
Fax 34 93 8860785
girbau@girbau.es
www.girbau.com

USA, CANADA:

CONTINENTAL GIRBAU Inc.
2500 State Road 44
WI 54904 Oshkosh • USA
Tel. 1(920) 231-8222
Fax 1(920) 231-4666
info@cont-girbau.com
www.cont-girbau.com

Parts Handbook
Manual de recambios
Vues Eclatées

RMS610
REM025

Cod. 625277 Alt.11
Rev. 01/0817

NOTES TO USE PARTS LIST

Sheets no. 1, 2, 3, 4, 5:
Are common for all versions.

Sheet no. 6:
Front soap dispenser

Sheet no. 7:
Top soap dispenser

ACLARACIONES PARA EL USO DEL MANUAL DE RECAMBIOS

Hojas nº 1, 2, 3, 4, 5:
Son comunes a todas las variantes.

Hoja nº 6:
Dosificador frontal

Hoja nº 7:
Dosificador superior

NOTES UTILISATION VUES ECLATEES

Feuilles no.1, 2, 3, 4, 5:
Sont communes à toutes les versions.

Feuille no. 6:
Bac a produits frontal

Feuille no. 7:
Bac a produits supérieure

info@zipnasklade.ru
8(800)500-69-51

VERY IMPORTANT:
Before ordering parts be sure they have not been modified. Check it on modification sheet, after the corresponding sheet.

MUY IMPORTANTE:
Al pedir una pieza cerciorarse antes de que la misma no ha sido modificada. Si lo hubiese sido, estaría situada como hoja de modificaciones, detrás de la hoja correspondiente.

TRES IMPORTANT:
Avant de commander une pièce, s'assurer qu'elle n'a pas été modifiée. Le vérifier sur feuille de modifications, derrière la feuille correspondante.

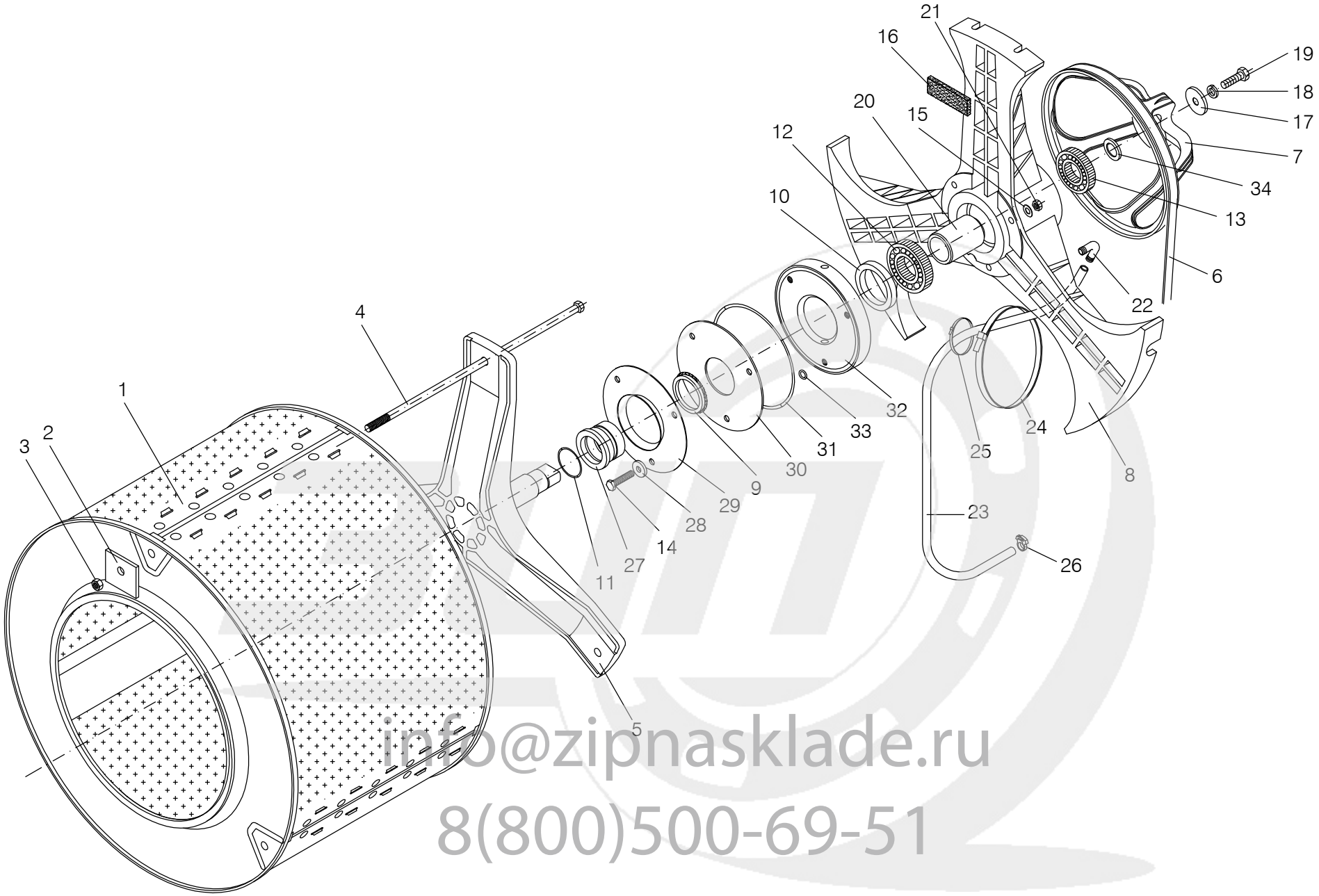

info@zipnasklade.ru
8(800)500-69-51

Nº	REF	DENOMINATION	DENOMINACIÓN	DENOMINATION
1	421875	BASKET BODY	CUERPO TAMBOR	CORPS TAMBOUR
2	421636	BASKET SHOVEL RENFORT	REFUERZO PALA TAMBOR	REFORT PALETTE TAMBOUR
3	149955	HEX NUT DIN 934 A2-70 M10	TUERCA HEXAGONAL DIN 934 A2-70 M10	ECROU HEXAGONALE DIN 934 A2-70 M10
4	333161	BASKET SHOVEL STRETCHER	TIRANTE PALA TAMBOR	TIRANT PALETTE TAMBOUR
5	332841	BASKET TRUNNION	ESTRELLA ARRASTRE TAMBOR	CROISILLON TAMBOUR
6	319855	ESTR.BELT 9PJ 1503+/-6	CORREA ESTR.9PJ1503+-6	COURROIE ESTR.9PJ 1503+/-6
7	321638	BASKET PULLEY	POLEA TAMBOR	POULIE TAMBOUR
8	421248	BEARING BOX	ESTRELLA CAJA COJINETES	BOITE ROULEMENTS
9	343715	ANILLO V-RING V-50A VITON	ANILLO V-RING V-50A VITON	ANILLO V-RING V-50A VITON
10	338913	SEAL 52X68X8 BA	RETEN 52X68X8 BA	RESERVE 52X68X8 BA
11	338947	TORIC GASKET 40X44X2	JUNTA TORICA 40X44X2	JOINT TORIQUE 40X44X2
12	305789	BEARING 6208-2Z	RODAMIENTO 6208-2Z	ROULEMENT 6208-2Z
13	172072	BEARING 6206-2Z QE6	RODAMIENTO 6206-2Z	ROULEMENT 6206-2Z QE6
14	338988	HEX SCREW INOX DIN 933 M 8X 55	TOR.EX.DIN933INOX A2-70 M 8X55	VIS.HEX.DIN933 INOX A270 M8X55
15	149518	BICR.WASHER B DIN125-ST 8,4	ARAN.B DIN125-ST B.TRI. 8,4	RONDELLE.B DIN125-ST BICR.8,4
16	101014	PROFILE ADHESIVE 25X6	PERF.AUTOAD.ESPONJ.NEOPR.25 X6	PROFILE ADHESIVE 25X6
17	406421	WASHER D57XD11X4 TRIVALENT	ARANDELA 57X11X4 TRIVALENTE	RONDELLE D57XD11X4 TRIVALENT
18	149799	GROWER WASHER DIN 127 M-10	ARAN.GROWER A10 DIN127 B.TRI.	RONDELLE GROWER DIN 127 M-10
19	146506	8G HEX.SCREW DIN 933 M-10X30	TOR.EX.DIN933-8.8 B.TRI.M10X30	VIS HEX. 8G DIN 933 M-10X30
20	333138	BEARING END-PIECE	TOPE COJINETES	ARRET ROULEMENTS
21	164285	SELF-LOCKING NUT DIN985-8 B.TRI.M8	TUER.AUTOBL.DIN985-8 B.TRI.M8	ECROU AUTOBLOCANT DIN985-8 B.TRI.M8
22	332304	ELBOW POLY.STER10	CODO POLIPROPILENO STER10	COUDE POLY.STER10
23	420844	BEARING BOX DRAIN HOSE	TUBO DESAGÜE CAJA COJINETES	TUBE VIDANGE BOITE ROULEMENTS
24	140509	BLACK POLYAMIDE CLAMP 7.5X360MM	BRIDA POLIAMIDA NEGRA 7.5X360MM	BRIDE POLYAMIDE NOIR 7.5X360MM
25	140525	CLAMP 2244-0	BRIDA UNEX 2244-0 *	BRIDE 2244-0
26	323667	CLAMP NORMA D12,07-D13,61	ABRAZADERA NORMA D12,07-D13,61	COLLIER NORMA D12,07-D13,61
27	338822	SEAL RING	ANILLO RETENES	BAGUE RESERVES
28	333146	WASHER 23X8.5X3	ARANDELA 23X8.5X3 INOX	RONDELLE 23X8.5X3

info@zipnasklade.ru
8(800)500-69-51

Nº	REF	DENOMINATION	DENOMINACIÓN	DENOMINATION
29	338848	SEAL PLATE	DEFLECTOR ANILLO RETENES	PLATINE RESERVES
30	338855	V-RING PLATE	PLATINA V-RING	PLATINE V-RING
31	333153	JOINT	JUNTA ESPONJOSA SEPARADOR	JOINT
32	333120	OUTER DRUM SEPARATOR	SEPARADOR ENVOLVENTE	SEPARATEUR CUVE
33	338939	TORIC GASKET 8X11.2X1.6	JUNTA TORICA 8X11.2X1.6	JOINT TORIQUE 8X11.2X1.6
34	420836	WASHER 39X30.2X3	ARANDELA 39X30.2X3 TRIVALEN.	RONDELLE 39X30.2X3

info@zipnasklade.ru
8(800)500-69-51

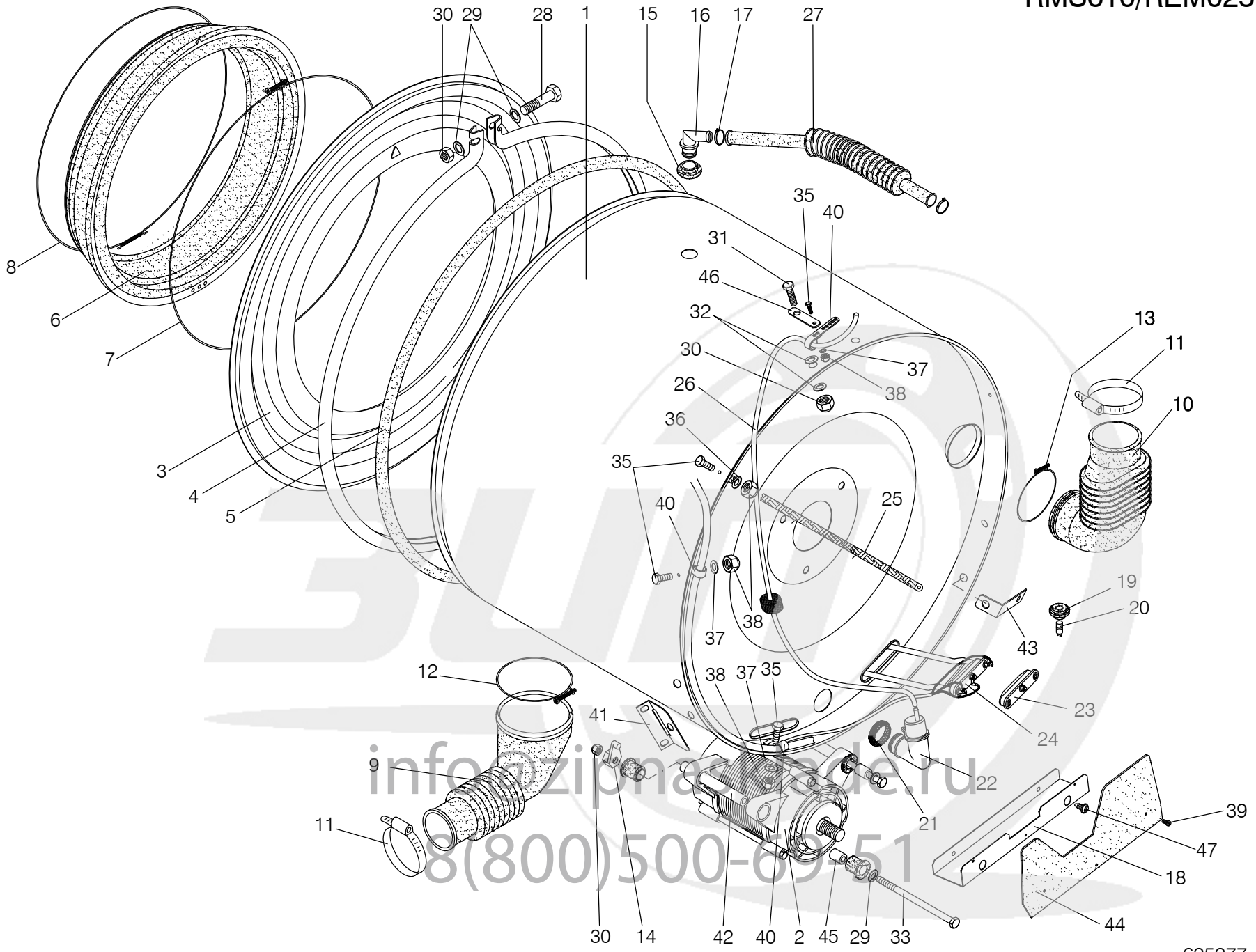

info@zipmachade.ru
8(800)500-69-51

Nº	REF	DENOMINATION	DENOMINACIÓN	DENOMINATION
		ELECTRIC HEATING KITS	KITS CALEFACCION ELECTRICA	KITS CHAUFFAGE ELECTRIQUE
	796987	E.HEATING KIT 200-230/380-400V (RMS610)	KIT CAL.E.200-230/380-400V (RMS610)	KIT CHAUFF.E.200-230/380-400V (RMS610)
	796995	E.HEAT.KIT (208-240)/240/415V (REM025) (FOR 208-240V) (RMS610) (FOR 240 AND 415V)	KIT CAL.E.(208-240)/240/415V (REM025) (PARA 208-240V) (RMS610) (PARA 240 Y 415V)	KIT CHAUFF.E(208-240)/240/415V (REM025) (POUR 208-240V) (RMS610) (POUR 240 ET 415V)
1	421925	OUTER DRUM	ENVOLVENTE	CUVE
2	421842	MOTOR MT55-90/2	MOTOR MT55-90/2	MOTEUR MT55-90/2
	323873	MOTOR SILENTBLOC	SILENTBLOC MOTOR	SILENTBLOC MOTEUR
	454744	BEARING SKF 6203 ZZ/C3-LHT23	RODAMIENTO SKF 6203 ZZ/C3-LHT23	ROULEMENT SKF 6203 ZZ/C3-LHT23
	320713	BEARING 6204-2Z C3	RODAMIENTO 6204-2Z/C3	ROULEMENT 6204-2Z C3
3	322099	OUTER DRUM FRONT	FRONTAL ENVOLVENTE	FRONTAL CUVE
4	322222	OUTER DRUM FIXING RING	ARO FIJACION ENVOLVENTE	BAGUE FIXATION CUVE
5	327700	OUTER DRUM FRONT GASKET	JUNTA FRONTAL ENVOLVENTE	JOINT FRONTAL CUVE
6	322263	DOOR GASKET MS-610	JUNTA ESCOTILLA MS-610	JOINT HUBLOT MS-610
7	323204	CLAMP D385XD1,5	ABRAZ.ALAMBRE D385XD1,5 TORNI.	BRIDE D385XD1,5
8	323212	CLAMP D340XD1,5	ABRAZ.ALAMBRE D340XD1,5 MUELLE	BRIDE D340XD1,5
9	322214	OUTER-DRUM DRAIN BELLOWS	FUELLE DESAGUE ENVOLVENTE	DURITE VIDANGE CUVE
10	338814	DISPENSER BELLOWS	FUELLE DOSIFICADOR	DURITE BAC A PRODUIT
11	323576	CLAMP FIM 35542 B54,2	ABRAZ.FIM 35542 B54,2	COLLIER FIM 35542 B54,2
12	323220	CLAMP D97XD2	ABRAZ.ALAMBRE D97XD2	COLLIER D97XD2
13	338905	CLAMP 6860	ABRAZ.ALAMBRE SWHCFS 6860	BRIDE 6860
14	421511	MOTOR NUT BRACKET	SOPORTE TUERCA MOTOR	SUPPORT ECROU MOTEUR
15	338863	VAPOR OUTLET SHEATH-LODGING	PASAMUROS DESVAPORIZADOR	LOGEMENT SORTIE CONDENSATS
16	338871	VAPOR OUTLET RACCORD	RACOR DESVAPORIZADOR	RACCORD SORTIE CONDENSATS
17	338897	CLAMP 20,2	ABRAZ. F.I.M. 20202 B20,2	BRIDE 20,2
18	423459	MOTOR PROTECTION	PROTECCION MOTOR	PROTECTION MOTEUR
19	256149	SENSOR SHEATH LODGING	PASAMUROS SENSOR	LOGEMENT SENSEUR

info@zipnasklade.ru
8(800)500-69-51

Nº	REF	DENOMINATION	DENOMINACIÓN	DENOMINATION
20	193862	NTC RESISTANCE	RESISTENCIA NTC	RESISTANCE NTC
21	320036	PRESSURE T.BODY SHEATH-LODGING	PASAMUROS CUERPO PRESOSTATO	LOGEMENT CORPS PRESSOSTAT
22	320382	PRESSURE TRANSMITT INTAKE BODY	CUERPO TOMA PRESOSTATO	CORPS PRISE PRESSOSTAT
23	121962	HEATER INLET LID	CIERRE ENTRADA CALEFACTOR *	FERMETURE ENTREE RESISTANCE
24	332577	HEATER 230V 2000/1000 W (RMS610) (FOR MACHINES ELECTR.HEATING) (FOR 200V-208V-220V-230V-380V-400V)	CALEFACTOR 230V 2000/1000 W (RMS610) (PARA MODELOS CALEFAC.ELECTR.) (PARA 200V-208V-220V-230V-380V-400V)	RESISTANCE 230V 2000/1000 W (RMS610) (POUR MACHINES CHAUF.ELECTR.) (POUR 200V-208V-220V-230V-380V-400V)
	332569	HEATER 240V 2000/1000W (REM025) (FOR MACHINES ELECTR.HEATING) (FOR 208-240V)	CALEFACTOR 240V 2000/1000W (REM025) (PARA MODELOS CALEFAC.ELECTR.) (PARA 208-240V) . .	RESISTANCE 240V 2000/1000W (REM025) (POUR MACHINES CHAUF.ELECTR.) (POUR 208-240V)
		(RMS610) (FOR MACHINES ELECTR.HEATING) (FOR 208-240 AND 415V)	(RMS610) (PARA MODELOS CALEFAC.ELECTR.) (PARA 208-240 Y 415V)	(RMS610) (POUR MACHINES CHAUF.ELECTR.) (POUR 208-240 ET 415V)
25	323824	GROUND CS 6-310/010/07	TRENZA DE MASA CS 6-310/010/07	TERRE CS 6-310/010/07
26	343327	PRESSURE TRANSMITTER HOSE	TUBO TRANSMISOR PRESION	TUYAU PRESSOSTAT
27	338889	VAPOUR OUTLET HOSE	TUBO DESVAPORIZADOR	TUBE SORTIE CONDENSATS
28	146464	BICR.HEX SCREW DIN933-8 M8X100	TOR.EX.DIN933-8.8 B.TRI.M8X100	VIS HEX BICR.DIN933-8 M 8X100
29	149518	BICR.WASHER B DIN125-ST 8,4	ARAN.B DIN125-ST B.TRI. 8,4	RONDELLE.B DIN125-ST BICR.8,4
30	164285	SELF-LOCKING NUT DIN985-8 B.TRI.M8	TUER.AUTOBL.DIN985-8 B.TRI.M8	ECROU AUTOBLOCANT DIN985-8 B.TRI.M8
31	192831	BICR.HEX SCREW DIN 933-8 M8X30	TOR.EX.DIN933-8.8 B.TRI.M 8X30	VIS HEX DIN 933-8,8 BIC.M8X30
32	261529	WASHER 25X8,5X4	ARANDELA 25X8.5X4 TRIVALEN.	RONDELLE 25X8,5X4
33	339366	SCREW HEX 8.8 DIN931 M 8X160	TOR.EX.DIN931-8.8B.TRI.M 8X160	VIS.HEX.DIN931 8.8 BICRM 8X160
35	146258	BIC.HEX SCREW DIN933-4.8 M4X10	TOR.EX.DIN933-4.8 B.TRI.M 4X10	VIS HEX DIN933-4.8 BICR.M 4X10
36	287920	WASHER 14X4,5X2	ARANDELA 14X4.5X2 TRIVALEN.	RONDELLE 14X4,5X2
37	149476	BICR.WASHER B DIN125-ST 4,3	ARAN.B DIN125-ST B.TRI. 4,3	RONDELLE B DIN125-ST BICR.4,3
38	132043	SELF-LOCKING NUT DIN985-8 B.TRI.M 4	TUER.AUTOBL.DIN985-8 B.TRI.M 4	ECROU AUTOBLOCANT DIN985-8 B.TRI.M 4
39	322750	SCREW FDS SF-M5X12 PKS TORX SPER	TORNILLO FDS SF-M5X12 (ESPECIAL)*	VIS FDS SF-M5X12 PKS TORX SPER
40	140418	CLAMP UNEX REF 1201	BRIDA UNEX 1201	BRIDE UNEX REF 1201
41	432070	OUTER DRUM PIECE	POSICIONADOR ENVOLVENTE	PIECE CUVE
42	421529	MOTOR SEPARATOR	SEPARADOR MOTOR	SEPARATEUR MOTEUR

info@zipnasklade.ru
8(800)500-69-51

Nº	REF	DENOMINATION	DENOMINACIÓN	DENOMINATION
43	412825	WIRE FIXATION PIECE	ESCUADRA FIJACION CABLES	ANGLE FIXATION CABLES
44	432252	WIRE PROTECTION	PROTECCION CABLES	PROTECTION CABLES
45	421537	MOTOR SLEEVE	CASQUILLO MOTOR	FRETTE MOTEUR
46	431452	PRESSOSTAT HOSE BRACKET	SOPORTE TUBO PRESOSTATO	SUPPORT TUBE PRESSOSTAT
47	343434	SCREW 512TTAET M5X12	TORNILLO 512TTAET M5X12 (ESPECIAL)	VIS 512TTAET M5X12

info@zipnasklade.ru
8(800)500-69-51

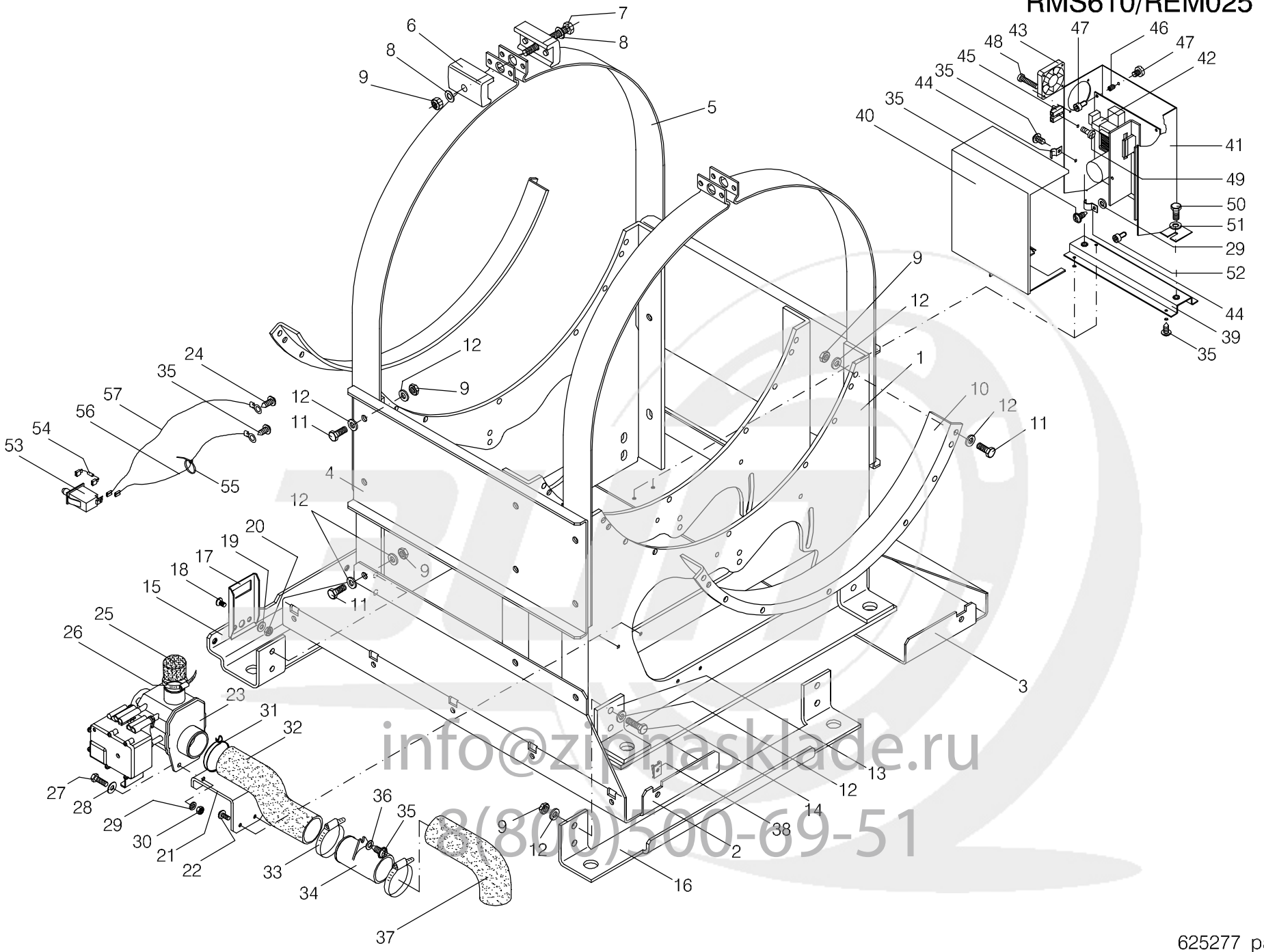

info@zipnasklade.ru
8(800)500-69-51

Nº	REF	DENOMINATION	DENOMINACIÓN	DENOMINATION
1	421834	CHASSIS PLATE	PLACA CHASIS	PLAQUE CHASSIS
2	431924	CHASSIS RIGHT BASE	BASE DERECHA CHASIS	BASE DROITE CHASSIS
3	431932	CHASSIS LEFT BASE	BASE IZQUIERDA CHASIS	BASE GAUCHE CHASSIS
4	421727	CHASSIS SIDE PANEL	LATERAL CHASIS	LATERAL CHASSIS
5	421677	OUTER-DRUM CLAMP	ABRAZADERA ENVOLVENTE	BRIDE CUVE
6	338053	CLAMP TEIGHTENER	TENSOR ABRAZADERA	TENDEUR BRIDE
7	193391	HEX SCREW 8G DIN933 M- 8X 70	TOR.EX.DIN933-8.8 B.TRI.M 8X70	VIS HEX.8G DIN933 M- 8X 70
8	261529	WASHER 25X8,5X4	ARANDELA 25X8.5X4 TRIVALEN.	RONDELLE 25X8,5X4
9	164285	SELF-LOCKING NUT DIN985-8 B.TRI.M8	TUER.AUTOBL.DIN985-8 B.TRI.M8	ECROU AUTOBLOCANT DIN985-8 B.TRI.M8
10	433821	OUTER-DRUM SUPPORT PROFILE	PERFIL APOYO ENVOLVENTE	PROFILE APPUI CUVE
11	192849	BIC.HEX SCREW DIN933-8 M-8X25	TOR.EX.DIN933-8.8 B.TRI.M 8X25	VIS HEX.DIN933-8,8 BICR.M-8X25
12	149518	BICR.WASHER B DIN125-ST 8,4	ARAN.B DIN125-ST B.TRI. 8,4	RONDELLE.B DIN125-ST BICR.8,4
13	421495	CHASSIS JOINTING	UNION CHASIS	UNION CHASSIS
14	192831	BICR.HEX SCREW DIN 933-8 M8X30	TOR.EX.DIN933-8.8 B.TRI.M 8X30	VIS HEX DIN 933-8,8 BIC.M8X30
15	431965	CHASSIS JOINING FRONT BASE	BASE ANT. UNION CHASIS	BASE FRONTAL UNION CHASSIS
16	431973	CHASSIS JOINING REAR BASE	BASE POST. UNION CHASIS	BASE ARRIERE UNION CHASSIS
17	326512	BASE MICROSWITCH BRACKET	SOPORTE MICRORRUPTOR BASE	SUPPORT MICRORRUPTEUR BASE
18	147611	SCREW DIN963-4.8 BICR M 4X10	TOR.AV.DIN7991 B.TRI.M 4X10	VIS AV DIN963-4.8 BICR M 4X10
19	149476	BICR.WASHER B DIN125-ST 4,3	ARAN.B DIN125-ST B.TRI. 4,3	RONDELLE B DIN125-ST BICR.4,3
20	150185	BICR.HEX.NUT DIN934-8 M4	TUER.EX.DIN934-8 B.TRI.M 4	ECROU HEX.DIN934-8 BICR.M4
21	421651	DRAIN BRACKET	SOPORTE DESAGÜE	SUPPORT VIDANGE
22	343434	SCREW 512TTAET M5X12	TORNILLO 512TTAET M5X12 (ESPECIAL)	VIS 512TTAET M5X12
23	600528	DRAIN G2-O-180	DESAGÜE G2-O-180	VIDANGE G2-O-180
24	322933	SCREW 414TT85T 4X14 INOX	TORNILLO 414TT85T 4X14 INOX (ESPECIAL)	VIS 414TT85T 4X14 INOX
25	135004	CONICAL END-PIECE REPRIMSA R16	TOPE CONICO REPRIMSA R-16 D30	ARRET CONIQUE REPRIMSA R16 D30
26	149609	CLAMP 25-40	ABRAZADERA 25- 40 *	BRIDE 25-40
27	146316	BICR.HEX SCREW DIN933-8 M-6X20	TOR.EX.DIN933-8.8 B.TRI.M 6X20	VIX HEX BICR.DIN933-8.8 M-6X20
28	122259	WASHER 20X6X1,5	ARANDELA 20X6X1.5 INOX	RONDELLE 20X6X1,5

info@zipnasklade.ru
8(800)500-69-51

Nº	REF	DENOMINATION	DENOMINACIÓN	DENOMINATION
29	149526	BICR.WASHER B DIN125-ST 6,4	ARAN.B DIN125-ST B.TRI. 6,4	RONDELLE B DIN125-ST BICR.6,4
30	176834	SELF-LOCKING NUT DIN985-8 B.TRI.M6	TUER.AUTOBL.DIN985-8 B.TRI.M6	ECROU AUTOBLOCANT DIN985-8 B.TRI.M6
31	409755	CLAMP FIM 35574 B57,4	ABRAZ.FIM 35574 B57,4	COLLIER FIM 35574 B57,4
32	333369	DRAIN HOSE	TUBO DESAGÜE	TUBE VIDANGE
33	132290	CLAMP 301730-8 D50-70	ABRAZADERA 301730-8 D50- 70	BRIDE 301730-8 D50-70
34	322149	DRAIN SLEEVE	MANGUITO DESAGUE	MANCHON VIDANGE
35	322750	SCREW FDS SF-M5X12 PKS TORX SPER	TORNILLO FDS SF-M5X12 (ESPECIAL)*	VIS FDS SF-M5X12 PKS TORX SPER
36	149534	BICR.WASHER B DIN125-ST 5,3	ARAN.B DIN125-ST BICR. 5,3	RONDELLE B BICR.DIN125-ST 5,3
37	326454	RUBBER ELBOW D50X200X100	CODO GOMA D50X200X100	COUDE GOMME D50X200X100
38	328575	QUICK NUT TRT M5-1 0212831-6	TUER.RAPIDA TRT M5-1 0212831-6	ECROU RAPIDE TRT M5-1
39	421628	INVERTER BASE	BASE CONVERTIDOR	BASE CONVERTISSEUR
40	323105	INVERTER COVER	TAPA VARIADOR	COUVERCLE CONVERTISSEUR
41	326033	INVERTER PLATE	PLACA CONVERTIDOR	PLAQUE CONVERTISSEUR
42	513663	SET INVERTER	CONVERTIDOR COMPLETO	CONVERTISSEUR COMPLET
43	323089	INVERTER FAN	VENTILADOR CONVERTIDOR	VENTILATEUR CONVERTISSEUR
44	323055	ALUMINIUM CLAMP AL2	ABRAZADERA ALUMINIO AL2	BRIDE ALUMINIUM AL2
45	195818	CONNECTION BOARD (2 ELEMENT)	REGLETA CINTISA 230DS (2ELEM)	BORNIER (2 ELEMENTS)
46	323063	SEPARATOR HEX.HTSB-M4-10-7-1 (4 UNITS)	SEPARADOR HEX.HTSB-M4-10-7-1 (4 UNIDADES)	SEPARATEUR HEX.HTSB-M4-10-7-1 (4 UNITES)
	513655	HEX SEPARATOR HTSN-M4-10-8-2 (1 UNIT)	SEPARADOR HEX.HTSN-M4-10-8-2 (1 UNIDAD)	SEPARATEUR HEX HTSN-M4-10-8-2 (1 UNITE)
47	10315091	ALLEN SCREW DIN 912 8,8 M4x5 TRIVALENT	TORNILLO ALLEN DIN 912 8,8 M4x5 TRIVALEN	VIS ALLEN DIN 912 8,8 M4x5 TRIVALENT
48	332627	SCREW REF. TT85 T M3 X16	TOR. REF. TT85 T M3 X16	VIS REF.TT85 T M3 X16
49	322693	SCREW PT KN35X10 WN1412	TORNILLO PT KN35X10 WN1412 (ESPECIAL)	VIS PT KN35X10 WN1412
50	146399	BICR HEX SCREW DIN933-8 M8X20	TOR.EX.DIN933-8.8 B.TRI.M 8X20	VIS HEX DIN933-8.8 BICR.M8X20
51	327080	WASHER 29X8,5X4	ARANDELA 30X8.5X4 TRIVALEN.	RONDELLE 29X8,5X4
52	161646	ALLEN SCREW DIN 912 M-4X8	TOR.ALLDIN912-8.8 B.TRI.M 4X 8	VIS ALLEN DIN 912 M-4X8
53	323048	MINISWITCH CHERRY E69-60C	MINIRRUPTOR CHERRY E69-60C	MINIRRUPTEUR CHERRY E69-60C
54	433219	UNLOADING HEATER	RESISTENCIA DE DESCARGA	RESISTANCE DE DECHARGEMENT

info@zipnasklade.ru
8(800)500-69-51

Nº	REF	DENOMINATION	DENOMINACIÓN	DENOMINATION
55	322644	CLAMP BT-4	ABRAZADERA BT-4-01-NT	BRIDE BT-4
56	342188	DRAIN GROUND CABLE	CABLE TIERRA DESAGÜE	PRISE DE TERRE VIDANGE
57	454959	MOTOR GROUND CABLE	CABLE TIERRA MOTOR	PRISE DE TERRE MOTEUR

info@zipnasklade.ru
8(800)500-69-51

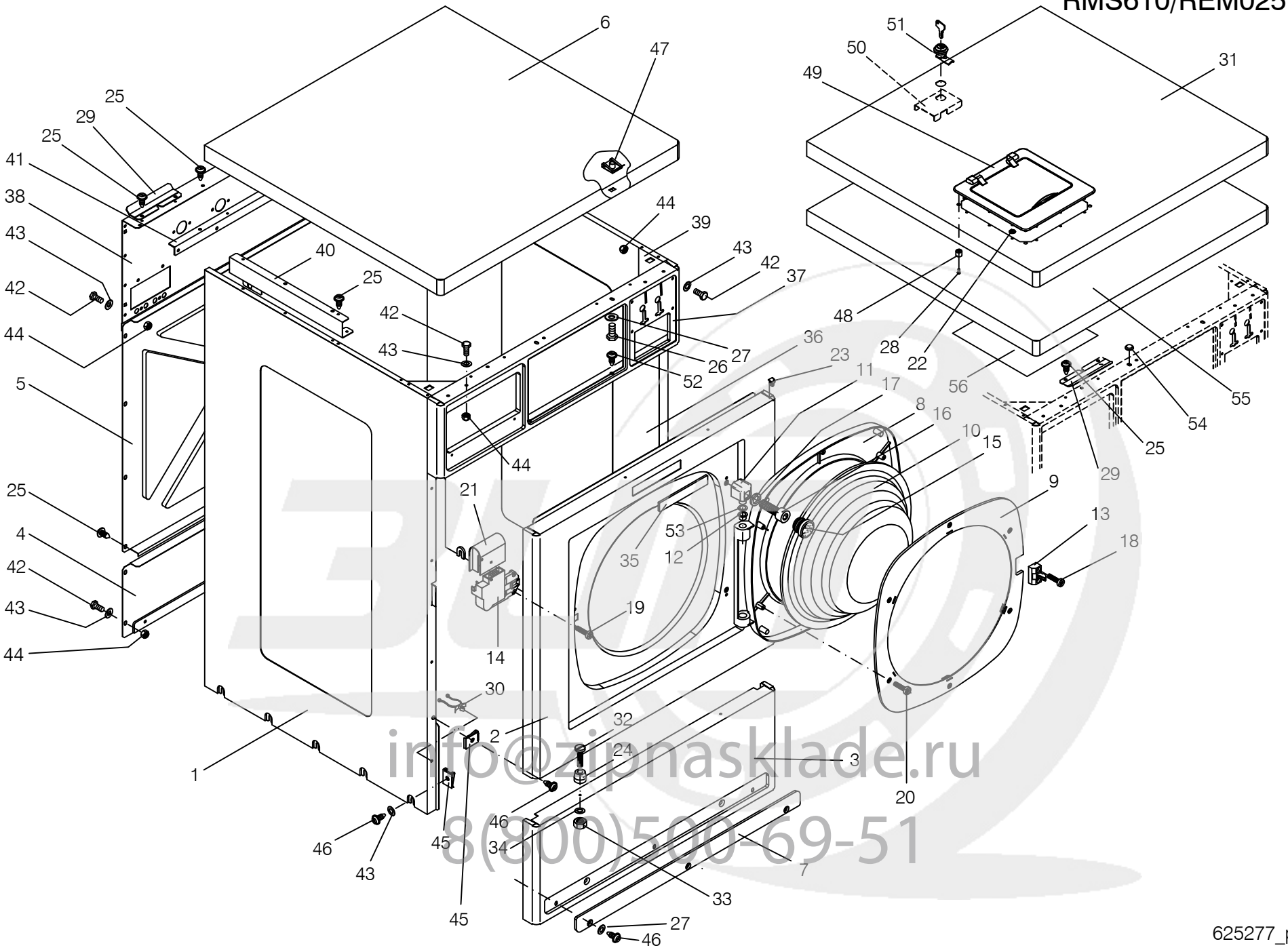

info@zipnasklade.ru
8(800)500-69-51

Nº	REF	DENOMINATION	DENOMINACIÓN	DENOMINATION
1	421958	LEFT SIDE PANEL (INOX)	TAPA LATERAL IZQUIERDA (INOX)	COUVERCLE LATERAL GAUCHE (INOX)
	445395	LEFT SIDE COVER (PRE-COATED)	TAPA LATERAL IZQUIERDA (PRE-COATED)	COUVERCLE LATERAL GAUCHE (PRE-COATED)
2	410597	FRONT PANEL (INOX)	TAPA FRONTAL (INOX)	COUVERCLE FRONTAL (INOX)
	528455	FRONT PANEL (PRE-COATED)	TAPA FRONTAL (PRE-COATED)	COUVERCLE FRONTAL (PRE-COATED)
3	322917	LOWER FRONT COVER (INOX)	T. FRONTAL INFERIOR INOX (INOX)	COUVERCLE FRONTAL INFERIEUR (INOX)
	528448	LOWER FRONT COVER (PRE-COATED)	T. FRONTAL INFERIOR PRECOATED (PRE-COATED)	COUVERCLE FRONTAL INFERIEUR (PRE-COATED)
4	321794	LOWER REAR PANEL	TAPA POSTERIOR INFERIOR	COUVERCLE ARRIERE INFERIEUR
5	321786	CENTRAL REAR PANEL	TAPA POSTERIOR CENTRAL	COUVERCLE ARRIERE CENTR.
6	421750	TOP PANEL (FOR FRONT DISPENSER) (INOX)	TAPA SUPERIOR (PARA DOSIFICADOR FRONTAL) (INOX)	COUVERCLE SUPERIEUR (POUR BAC A PRODUITS FRONTAL) (INOX)
	445387	UPPER COVER (FOR FRONT DISPENSER) (PRE-COATED)	TAPA SUPERIOR (PARA DOSIFICADOR FRONTAL) (PRE-COATED)	COUVERCLE SUPERIEUR (POUR BAC A PRODUITS FRONTAL) (PRE-COATED)
7	323808	TOE PLATE	ZOCALO	PLAQUE HABILLAGE INF.
8	432278	DOOR	CUERPO ESCOTILLA	HUBLOT
9	322859	SPYHOLE PLATE	PORTA-MIRILLA	PLAQUE VITRE
10	321596	GLASS	MIRILLA	VITRE
11	432286	HINGE	BISAGRA	CHARNIÈRE
12	322925	SLEEVE IGLIDUR GFM-1416-17	COJINETE SKF PPMF 141617	FRETTE IGLIDUR GFM-1416-17
13	440511	LOCKING HOOK BITRON	GANCHO CIERRE BITRON	CROCHET FERMETURE BITRON
14	333302	LOCKING BITRON BP P/5 DL-S1	CIERRE BITRON BP P/5 DL-S1 *	FERMETURE BITRON BP P/5 DL-S1
15	322974	PLUG KAPSTO GPN320GL18	TAPON KAPSTO GPN320GL18	BOUCHON KAPSTO GPN320GL18
16	316695	ALLEN SCREW DIN7984-8 M8X 25	TOR.ALLDIN7984-8.8B.TRI.M 8X25	VIS ALLEN DIN7984-8.8 B.M8X 25
17	318253	WASHER 8	ARAN.ESPECIAL TORN.DIN912 M 8	RONDELLE 8
18	322933	SCREW 414TT85T 4X14 INOX	TORNILLO 414TT85T 4X14 INOX (ESPECIAL)	VIS 414TT85T 4X14 INOX
19	322990	SCREW 4510RFAT INOX 4.5X10	TORNILLO 4510RFAT INOX 4.5X10 (ESPECIAL)	VIS 4510RFAT INOX 4.5X10

info@zipnasklade.ru
8(800)500-69-51

Nº	REF	DENOMINATION	DENOMINACIÓN	DENOMINATION
20	344085	SCREW 48TT85T 4X8 INOX	TORNILLO 48TT85T 4X8 INOX (ESPECIAL)	VIS 48TT85T 4X8 INOX
21	333070	LOCKING PROTECTION	PROTECCION CIERRE	PROTECTION FERMETURE
22	193540	MIKALOR QUICK FIXING 211038-8 (FOR TOP DISPENSER)	SUJEC.RAPIDA MIKALOR 211038-8 (PARA DOSIFICADOR SUPERIOR)	FIXATION RAPIDE MIKALOR 211038-8 (POUR BAC A PRODUITS SUPERIEUR
23	323717	END PIECE	CANTONERA	ARRET
24	322909	LOWER PANEL PIVOT	PIVOTE TAPA INFERIOR	PIVOT COUVERCLE INFERIEUR
25	322750	SCREW FDS SF-M5X12 PKS TORX SPER	TORNILLO FDS SF-M5X12 (ESPECIAL)*	VIS FDS SF-M5X12 PKS TORX SPER
26	146233	BICR.HEX SCREW DIN933-8 M6X15 (FOR FRONT DISPENSER)	TOR.EX.DIN933-8.8 B.TRI.M 6X15 (PARA DOSIFICADOR FRONTAL)	VIS HEX DIN933-8.8 BICR.M6X15 (POUR BAC A PRODUITS FRONTAL)
27	115733	WASHER 16X7X3	ARANDELA 16X7X3 TRIVALEN.	RONDELLE 16X7X3
28	326660	SCREW 412RFX87T INOXA2 4X12 (FOR TOP DISPENSER)	TORNILLO 412RFX87T INOXA2 4X12(ESPECIAL) (PARA DOSIFICADOR SUPERIOR)	VIS 412RFX87T INOXA2 4X12 (POUR BAC A PRODUITS SUPERIEUR
29	321836	TOP PANEL CLIP	GRAPA TAPA SUPERIOR	CLIP COUVERCLE SUPERIEUR
30	199893	CLAMP STL-450-3-01	ABRAZADERA STL-450-3-01	BRIDE STL-450-3-01
31	427674	TOP PANEL (FOR TOP DISPENSER) (INOX)	TAPA SUPERIOR (PARA DOSIFICADOR SUPERIOR) (INOX)	COUVERCLE SUPERIOR (POUR BAC A PRODUITS SUPERIEUR (INOX)
	445379	UPPER COVER (FOR TOP DISPENSER) (PRE-COATED)	TAPA SUPERIOR (PARA DOSIFICADOR SUPERIOR) (PRE-COATED)	COUVERCLE SUPERIEUR (POUR BAC A PRODUITS SUPERIEUR (PRE-COATED)
32	146134	BICR CYL SCREW DIN84 M-5X20	TOR.CIL.DIN84-4.8 B.TRI.M 5X20	VIS CYL BICR DIN84-4.8 M-5X20
33	176826	SELF-LOCKING NUT DIN985-8 B.TRI.M5	TUER.AUTOBL.DIN985-8 B.TRI.M5	ECROU AUTOBLOCANT DIN 985-8 B.TRI.M5
34	149534	BICR.WASHER B DIN125-ST 5,3	ARAN.B DIN125-ST BICR. 5,3	RONDELLE B BICR.DIN125-ST 5,3
35	326074	PLATE GIRBAU (RMS610)	PLACA GIRBAU (RMS610)	PLAQUE GIRBAU (RMS610)
	326082	PLATE CONTINENTAL GIRBAU (REM025)	PLACA CONTINENTAL GIRBAU (REM025)	PLAQUE CONTINENTAL GIRBAU (REM025)
	327023	PLATE VIKING	PLACA VIKING	PLAQUE VIKING
36	421966	RIGHT SIDE PANEL (INOX)	TAPA LATERAL DERECHA (INOX)	COUVERCLE LATERAL DROIT (INOX)
	445403	RIGHT SIDE COVER (PRE-COATED)	TAPA LATERAL DERECHA (PRE-COATED)	COUVERCLE LATERAL DROIT (PRE-COATED)

info@zipnasklade.ru
8(800)500-69-51

Nº	REF	DENOMINATION	DENOMINACIÓN	DENOMINATION
37	412718	CONTROL PANEL (RMS610)	PANEL DE MANDOS (RMS610)	PANNEAU COMMANDE (RMS610)
	621235	CONTROL PANEL (REM025)	PANEL DE MANDOS (REM025)	PANNEAU COMMANDE (REM025)
38	338996	REAR PLATE	PANEL POSTERIOR	COUVERCLE ARRIERE
39	322073	BRACKET	CARTELA	SUPPORT
40	421594	SOAP DISPENSER BRACKET	SOPORTE DOSIFICADOR	SUPPORT BAC A PRODUITS
41	326017	INSTALATION FIXATION PIECE	ESCUADRA FIJACION INSTALACION	PIECE FIXATION INSTALLATION
42	327064	HEX SCREW DIN 933 8,8 M5x12 TRIVALENT	TORNILLO HEXAGONAL DIN 933 8,8 M5x12 TRI	VIS HEXAGONALE DIN 933 8,8 M5x12 TRIVALE
43	327072	SCREW WASHER DIN912 M 5	ARAN.ESPECIAL TORN.DIN912 M 5	RONDELLE VIS DIN912 M 5
44	176826	SELF-LOCKING NUT DIN985-8 B.TRI.M5	TUER.AUTOBL.DIN985-8 B.TRI.M5	ECROU AUTOBLOCANT DIN 985-8 B.TRI.M5
45	328575	QUICK NUT TRT M5-1 0212831-6	TUER.RAPIDA TRT M5-1 0212831-6	ECROU RAPIDE TRT M5-1
46	328237	SCREW T20 AR.18ESTR. M5X15	TORNILLO C.ALOM.T20 M5X15 (ESPECIAL)*	VIS T20 AR.18ESTR. M5X15
47	332114	NUT M6 (FOR FRONT DISPENSER)	TUER.RAPIDA TRT M6-1 0212827 (PARA DOSIFICADOR FRONTAL)	ECROU M6 (POUR BAC A PRODUITS FRONTAL)
48	444398	FRAME FIXATION SLEEVE (FOR TOP DISPENSER)	CASQUILLO FIJACION MARCO (PARA DOSIFICADOR SUPERIOR)	FRETTE FIXATION CADRE (POUR BAC A PRODUITS SUPERIEUR
49	517508	UPPER SOAP DISPENSER LID (FOR TOP DISPENSER) (RMS610)	TAPA DOSIFICADOR SUP. (PARA DOSIFICADOR SUPERIOR) (RMS610)	COUVERCLE BAC A PRODUITS SUP. (POUR BAC A PRODUITS SUPERIEUR (RMS610)
	517136	UPPER SOAP DISPENSER LID CC-USA (FOR TOP DISPENSER) (REM025)	TAPA DOSIFICADOR SUP.CC-USA (PARA DOSIFICADOR SUPERIOR) (REM025)	COUVERCLE BAC A PRODUITS SUP. CC-USA (POUR BAC A PRODUITS SUPERIEUR (REM025)
50	440479	UPPER COVER REINFORT (FOR TOP DISPENSER)	REFUERZO TAPA SUPERIOR (PARA DOSIFICADOR SUPERIOR)	RENFORT COUVERCLE SUPERIEURE (POUR BAC A PRODUITS SUPERIEUR
51	196915	LOCK RE.20.00.02.05 (FOR TOP DISPENSER)	CERRADURA REF.20.00.02.05 * (PARA DOSIFICADOR SUPERIOR)	FERMETURE REF.20.00.02.05 (POUR BAC A PRODUITS SUPERIEUR
	196923	LOCK KEY RE.10.41.213 (FOR TOP DISPENSER)	LLAVE REF.10.41.213 COMB.T-205 (PARA DOSIFICADOR SUPERIOR)	CLE FERMETURE REF.10.41.213 (POUR BAC A PRODUITS SUPERIEUR
52	320911	SCREW FTX512FT85T INOX A2 M5X12	TOR.FTX512FT85T INOX A2 M5X12 (ESPECIAL)	VIS FTX512FT85T INOX A2 M5X12
53	343426	WASHER P15X22X0,1 DIN988	ARAN.AJUSTE PS15X22X0,1 DIN988	RONDELLE PS15X22X0,1 DIN988
54	514695	BLIND WIRETHROUGH REF.1013	PASACABLE CIEGO REF-1013	PASSECABLES AUVEGLE REF.1013

info@zipnasklade.ru
8(800)500-69-51

Nº	REF	DENOMINATION	DENOMINACIÓN	DENOMINATION
55	634410	UPPER COVER SET (FOR TOP DISPENSER) (WITHOUT SOAP DISPENSER) (INOX)	CONJUNTO TAPA SUPERIOR (PARA DOSIFICADOR SUPERIOR) (SIN DOSIFICADOR) (INOX)	ENSEMBLE COUVERCLE SUPERIEUR (POUR BAC A PRODUITS SUPERIEUR (NAS BAC A PRODUITS) (INOX)
	609677	UPPER COVER SET (FOR TOP DISPENSER) (WITHOUT SOAP DISPENSER) (PRE-COATED)	CONJUNTO TAPA SUPERIOR (PARA DOSIFICADOR SUPERIOR) (SIN DOSIFICADOR) (PRE-COATED)	ENSEMBLE COUVERCLE SUPERIEUR (POUR BAC A PRODUITS SUPERIEUR (NAS BAC A PRODUITS) (PRE-COATED)
56	590539	TOP COVER BLIND PROTECTOR (FOR TOP DISPENSER) (WITHOUT SOAP DISPENSER)	PROTECTOR TAPA SUPERIOR CIEGA* (PARA DOSIFICADOR SUPERIOR) (SIN DOSIFICADOR)	AVEUGLE SUPERIEUR PROTECTEUR COUVERCLE (POUR BAC A PRODUITS SUPERIEUR (NAS BAC A PRODUITS)

info@zipnasklade.ru
8(800)500-69-51

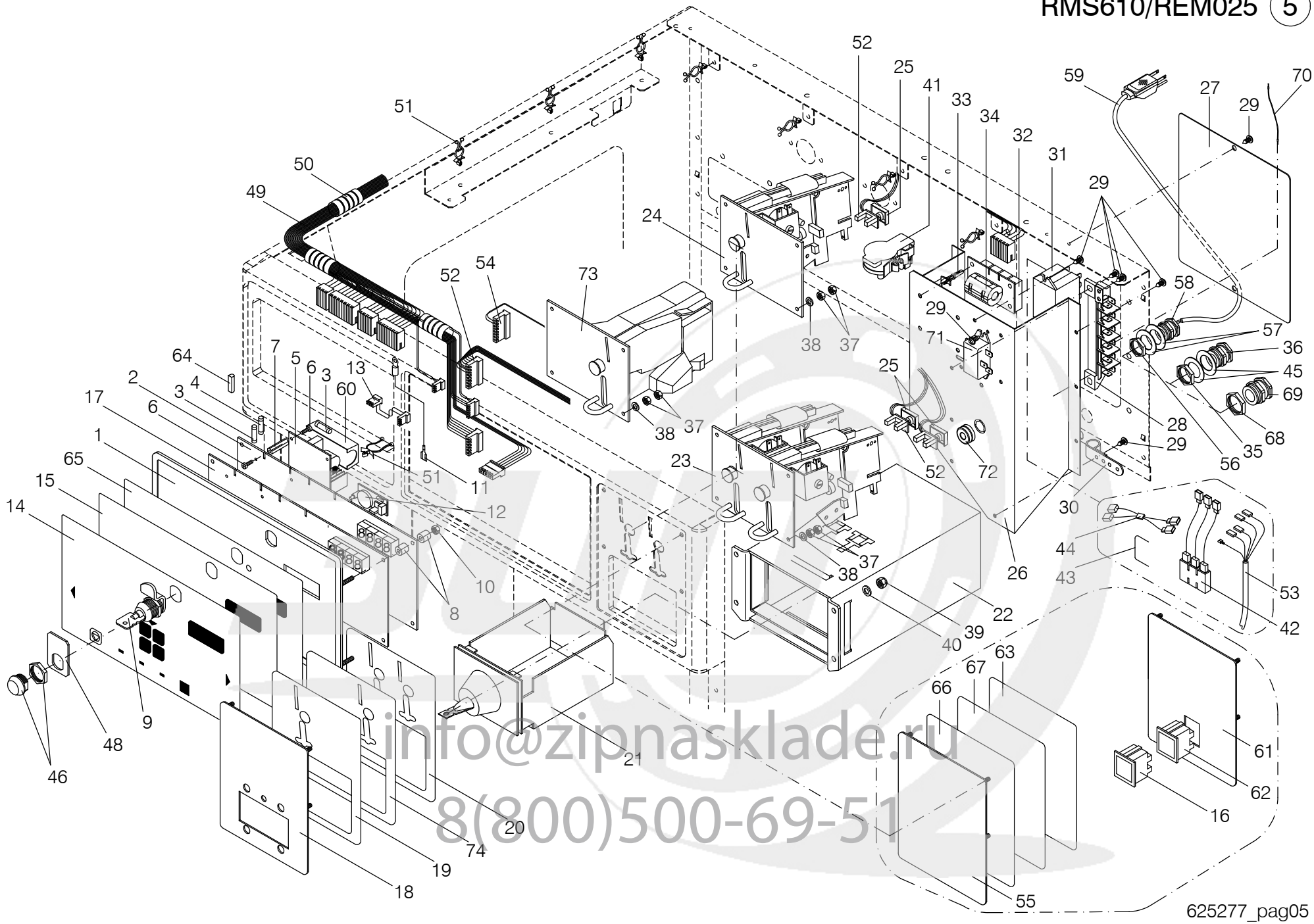

info@zipnasklade.ru
8(800)500-69-51

Nº	REF	DENOMINATION	DENOMINACIÓN	DENOMINATION
1	322776	CONTROL PANEL PLATE	PLACA PANEL DE MANDOS	PLAQUE PANNEAU DE COMMANDES
2	594515	MICROP. BOARD H6008/M610 LC/CC (LOGI CTRL MODELS ONLY) (COIN CTRL MODELS ONLY)	PLACA MICROP.H6008/M610 LC/CC (PARA MODELOS A LOGI CONTROL) (PARA MODELOS A COIN CONTROL)	PLAQUE MICROP. H6008/M610 LC/CC (POUR MODELE LOGI CONTROL) (POUR MODELE COIN CONTROL)
3	322941	FUSE SPT 2,5A	CART.FUSIB.SPT 0001.2508 2,5A*	CARTOUCHE FUSIB.2,5A
4	326371	FUSE FST 8A	CART.FUSIB.FST 0034.5244 8 A*	CARTOUCHE FUSIBLE FST 8A
5	332718	POWER SOURCE MW PS-25-12	FUENTE ALIMENT.MW PS-25-12	FONT ALIMENT.MW PS-25-12
6	322693	SCREW PT KN35X10 WN1412	TORNILLO PT KN35X10 WN1412 (ESPECIAL)	VIS PT KN35X10 WN1412
7	322685	SEPARATOR HEX.HS6-8	SEPARADOR EXAGONAL HS6-8	SEPARATEUR HEX. HS6-8
8	322768	MICRO BOARD SEPARATOR	SEPARADOR PLACA MICRO	SEPARATEUR PLAQUE MICRO
9	323881	LOCKING (FOR FRONT DISPENSER)	CIERRE (PARA DOSIFICADOR FRONTAL)	FERMETURE (POUR BAC A PRODUITS FRONTAL)
	316075	KEY FOR LOCK GREENWALD (FOR FRONT DISPENSER)	LLAVE PARA CIERRE GREENWALD * (PARA DOSIFICADOR FRONTAL)	CLE POUR FERMETURE GREENWALD (POUR BAC A PRODUITS FRONTAL)
10	150185	BICR.HEX.NUT DIN934-8 M4	TUER.EX.DIN934-8 B.TRI.M 4	ECROU HEX.DIN934-8 BICR.M4
11	342337	GROUND CABLE	CABLE DE TIERRA	PRISE DE TERRE
12	322677	CLOCK CIRCUIT (FOR MACHINES WITH CLOCK TR)	CIRCUITO RELOJ (PARA MODELOS CON RELOJ TR)	CIRCUIT HORLOGE (POUR MACHINES AVEC HOLOGE TR)
13	342451	INSTALLATION PLUG	CONECTORA INSTALACION	CONNECTEUR INSTALLATION
14	10016996	CC WASHER KEYBOARD (EXCEPT FOR USA AND CANADA)	TECLADO LAVADORA CC (EXCEPTO PARA USA Y CANADA)	CLAVIER LAVEUSE CC (SAUF POUR USA ET CANADA)
	10065449	CC EXTRA OP. WASHER KEYBOARD (FOR PROFITPLUS CONTROL MOD.) (EXCEPT FOR USA AND CANADA)	TECLADO LAVADORA CC EXTRA OP. (PARA MOD. PROFITPLUS CONTROL) (EXCEPTO PARA USA Y CANADA)	CLAVIER LAVEUSE CC EXTRA OP. (POUR MOD. PROFITPLUS CONTROL) (SAUF POUR USA ET CANADA)
	593509	COIN CONTROL EXTRA OP. WASHER KEYBOARD (FOR USA AND CANADA ONLY)	TECLADO LAVADORA CC EXTRA OP. (SOLO PARA USA Y CANADA)	CLAVIER LAVEUSE COIN CONTROL EXTRA OP. (SEULEMENT POUR USA ET CANADA)
	428839	CC-JA WASHER KEYBOARD (JAPENESE)	TECLADO LAVADORA CC-JA (JAPONES)	CLAVIER LAVEUSE CC-JA (JAPONAIS)
15	339630	LOGI CONTROL WASHER KEYBOARD (LOGI CTRL MODELS ONLY) (FOR USA AND CANADA ONLY)	TECLADO LAVADORA LC-IN (PARA MODELOS A LOGI CONTROL) (SOLO PARA USA Y CANADA)	CLAVIER LAVEUSE LOGI CONTROL (POUR MODELE LOGI CONTROL) (SEULEMENT POUR USA ET CANADA)
	10034817	LC WASHER KEYBOARD (LOGI CTRL MODELS ONLY)	TECLADO LAVADORA LC (PARA MODELOS A LOGI CONTROL)	CLAVIER LAVEUSE LC (POUR MODELE LOGI CONTROL)
	343996	TECLADO LAVADORA LC-JA (JAPENESE)	TECLADO LAVADORA LC-JA (JAPONES)	TECLADO LAVADORA LC-JA (JAPONAIS)

info@zipnasklade.ru
8(800)500-69-51

Nº	REF	DENOMINATION	DENOMINACIÓN	DENOMINATION
16	587519	SWITCH C1550AL (LOGI CTRL MODELS ONLY) (LOGI PRO MODELS ONLY)	INTERRUPTOR C1550AL (PARA MODELOS A LOGI CONTROL) (PARA MODELOS A LOGI PRO)	INTERRUPTEUR C1550AL (POUR MODELE LOGI CONTROL) (POUR MODELE LOGI PRO)
17	521815	PROCESSOR BOARD H6008/M610 LP (LOGI PRO MODELS ONLY)	PLACA MICROP.H6008/M610 LP (PARA MODELOS A LOGI PRO)	PLAQUE MICROP.H6008/M610 LP (POUR MODELE LOGI PRO)
18	322164	CARD READER PLATE (COIN CTRL MODELS ONLY) (FOR CARD READER)	PLACA LECTOR TARJETA (PARA MODELOS A COIN CONTROL) (PARA MODELOS CON TARJETERO)	PLAQUE LECTEUR CARTE (POUR MODELE COIN CONTROL) (POUR MACH.AVEC LECTEUR CARTE)
19	339861	COIN-METER PLATE FOR TOKEN GIR (FOR SINGLE COIN METER) (FOR MACHINES WITH TOKEN GIR.)	PLACA MONEDERO FG (PARA MONEDERO SIMPLE) (PARA MOD.CON FICHA GIRBAU)	PLAQUE MONNAYEUR A/JETON GIRB. (POUR MONNAYEUR SIMPLE) (POUR MACHINES AVEC JETON GIR)
	340117	USD COIN-METER PLATE (REM025) (FOR SINGLE COIN METER) (FOR MACHINES CC WITH COIN 25C	PLACA MONEDERO USD (REM025) (PARA MONEDERO SIMPLE) (PARA MOD.CC CON MOND.25C)	PLAQUE MONNAYEUR USD (REM025) (POUR MONNAYEUR SIMPLE) (POUR MACHINES CC AVEC MO.25C)
	339895	YEN COIN-METER PLATE (FOR SINGLE COIN METER) (FOR MOD.CC WITH COIN M.100 Y)	PLACA MONEDERO YEN (PARA MONEDERO SIMPLE) (PARA MOD.CC CON MON.100 YENS)	PLAQUE MONNAYEUR YEN (POUR MONNAYEUR SIMPLE) (POUR MOD.CC AVEC MON.100 YENS
20	339853	EUR COIN-METER PLATE (FOR DUAL COIN-METER) (FOR MACHINES WITH C-20C/2EUR)	PLACA MONEDERO EUR (PARA MONEDERO DOBLE) (PARA MODELOS CON MON.20C/2EUR	PLAQUE MONNAYEUR EUR (POUR MONNAYEUR DOUBLE) (POUR MACHINES AVEC M.20C/2EUR
	340109	USD COIN-METER PLATE (REM025) (FOR DUAL COIN-METER) (FOR MACHINES WITH 25C/1$)	PLACA MONEDERO USD (REM025) (PARA MONEDERO DOBLE) (PARA MODELOS CON 25C/1$)	PLAQUE MONNAYEUR USD (REM025) (POUR MONNAYEUR DOUBLE) (POUR MACHINES AVEC 25C/1$)
	339879	GBP COIN-METER PLATE (FOR DUAL COIN-METER) (FOR MOD. CC WITH 0,5£/1£)	PLACA MONEDERO GBP (PARA MONEDERO DOBLE) (PARA MOD. CC CON 0,5£/1£)	PLAQUE MONNAYEUR GBP (POUR MONNAYEUR DOUBLE) (POUR MOD. CC AVEC 0,5£/1£)
	339887	NIS COIN-METER PLATE (FOR DUAL COIN-METER) (FOR MOD.CC 1NIS/5NIS)	PLACA MONEDERO NIS (PARA MONEDERO DOBLE) (PARA MOD.CC 1NIS/5NIS)	PLAQUE MONNAYEUR NIS (POUR MONNAYEUR DOUBLE) (POUR MOD.CC 1NIS/5NIS)
	354050	COINMETER PLATE CC-MD NTD (FOR DUAL COIN-METER) (FOR MOD. CC NTD)	PLACA MONEDERO CC-MD NTD (PARA MONEDERO DOBLE) (PARA MOD. CC NTD)	PLAQUE MONNAYEUR CC-MD NTD (POUR MONNAYEUR DOUBLE) (POUR MOD. CC NTD)
21	169169	COIN BOX UG400A GI (COIN CTRL MODELS ONLY)	CAJA MONEDAS UG400A GI * (PARA MODELOS A COIN CONTROL)	BOITE MONNAIE UG400A GI (POUR MODELE COIN CONTROL)
22	322313	COIN BOX SUPPORT (COIN CTRL MODELS ONLY)	APOYO CAJON MONEDAS (PARA MODELOS A COIN CONTROL)	APPUI BOITE MONNAIE (POUR MODELE COIN CONTROL)
23	323659	COIN-METER F60.1 0,25/1,00USD	MONEDERO F60.1 0,25/1,00USD	MONNAYEUR F60.1 0,25/1,00USD
	530261	COIN-METER F60.1 0,25/1 USD THREAD BLOCK (FOR DUAL COIN-METER) (FOR MACHINES WITH 25C/1$)	MONEDERO F60.1 0,25/1 USD THREAD BLOCK (PARA MONEDERO DOBLE) (PARA MODELOS CON 25C/1$)	MONNAYEUR F60.1 0,25/1 USD THREAD BLOCK (POUR MONNAYEUR DOUBLE) (POUR MACHINES AVEC 25C/1$)

info@zippasklade.ru
8(800)500-69-51

Nº	REF	DENOMINATION	DENOMINACIÓN	DENOMINATION
	326892	COIN-METER F60.1 0,25/1,00CAD (FOR DUAL COIN-METER) (FOR MOD.WITH 0,25/1 CAD)	MONEDERO F60.1 0,25/1,00CAD (PARA MONEDERO DOBLE) (PARA MOD.CON 0,25/1 CAD)	MONNAYEUR F60.1 0,25/1,00CAD (POUR MONNAYEUR DOUBLE) (POUR MOD.AVEC 0,25/1 CAD)
	323741	COIN-METER F60.1 0,20/2,00EUR (FOR DUAL COIN-METER) (FOR MACHINES WITH C-20C/2EUR)	MONEDERO F60.1 0,20/2,00EUR (PARA MONEDERO DOBLE) (PARA MODELOS CON MON.20C/2EUR	MONNAYEUR F60.1 0,20/2,00EUR (POUR MONNAYEUR DOUBLE) (POUR MACHINES AVEC M.20C/2EUR
	326835	COIN-METER F60.1 1,00/5,00ILS (FOR DUAL COIN-METER) (FOR MOD.CC 1NIS/5NIS)	MONEDERO F60.1 1,00/5,00ILS * (PARA MONEDERO DOBLE) (PARA MOD.CC 1NIS/5NIS)	MONNAYEUR F60.1 1,00/5,00 ILS (POUR MONNAYEUR DOUBLE) (POUR MOD.CC 1NIS/5NIS)
	326769	COIN-METER F60.1 0,50/1,00 GBP (FOR DUAL COIN-METER) (FOR MOD. CC WITH 0,5£/1£)	MONEDERO F60.1 0,50/1,00GBP * (PARA MONEDERO DOBLE) (PARA MOD. CC CON 0,5£/1£)	MONNAYEUR F60.1 0,50/1,00 GBP (POUR MONNAYEUR DOUBLE) (POUR MOD. CC AVEC 0,5£/1£)
	354035	COINMETER F60.1 10/50 NTD (FOR DUAL COIN-METER) (FOR MOD. CC NTD)	MONEDERO F60.1 10/50NTD * (PARA MONEDERO DOBLE) (PARA MOD. CC NTD)	MONNAYEUR F60.1 10/50 NTD (POUR MONNAYEUR DOUBLE) (POUR MOD. CC NTD)
24	323642	COIN-METER F60.11 0,25USD	MONEDERO F60.11 0,25USD	MONNAYEUR F60.11 0,25USD
	530253	COIN-METER F60.11 0,25USD THREAD BLOCKIN (FOR SINGLE COIN METER) (FOR MACHINES CC WITH COIN 25C	MONEDERO F60.11 0,25USD THREAD BLOCKING (PARA MONEDERO SIMPLE) (PARA MOD.CC CON MOND.25C)	MONNAYEUR F60.11 0,25USD THREAD BLOCKING (POUR MONNAYEUR SIMPLE) (POUR MACHINES CC AVEC MO.25C)
	323733	COIN-METER F60.11W2000-TOKEN G (FOR SINGLE COIN METER) (FOR MACHINES WITH TOKEN GIR.)	MONEDERO F60.11 FICHA GIRBAU * (PARA MONEDERO SIMPLE) (PARA MOD.CON FICHA GIRBAU)	MONNAYEUR F60.11W2000 JETON GI (POUR MONNAYEUR SIMPLE) (POUR MACHINES AVEC JETON GIR)
	326777	COIN-METER F60.11 100YEN (FOR SINGLE COIN METER) (FOR MOD.CC WITH COIN M.100 Y)	MONEDERO F60.11 100YEN * (PARA MONEDERO SIMPLE) (PARA MOD.CC CON MON.100 YENS)	MONNAYEUR F60.11 100YEN (POUR MONNAYEUR SIMPLE) (POUR MOD.CC AVEC MON.100 YENS
	344622	COIN-METER F60.11 10NTD (FOR SINGLE COIN METER) (FOR MOD. CC NTD)	MONEDERO F60.11 10NTD * (PARA MONEDERO SIMPLE) (PARA MOD. CC NTD)	MONNAYEUR F60.11 10NTD (POUR MONNAYEUR SIMPLE) (POUR MOD. CC NTD)
	10098655	COIN METER F60.11 TOKEN ECO MALAYSIA (FOR SINGLE COIN METER) (FOR MOD. CC WITH COIN ECO MALAYSIA)	MONEDERO F60.11 FICHA ECO MALASIA (PARA MONEDERO SIMPLE) (PARA MOD. CC CON FICHA ECO MALASIA)	MONNAYEUR F60.11 JETON ECO MALASIA (POUR MONNAYEUR SIMPLE) (POUR MOD. CC AVEC MON. ECO MALASIA)
25	326124	OPTOISOLATOR FIXATION KIT	KIT FIJACION OPTOACOPLADOR *	KIT FIXATION OPTOISOLATEUR
26	421156	POWER INPUT BOX	CAJA ENTRADA CORRIENTE	BOITE CONNEXION ALIM.
27	421164	POWER INPUT COVER	TAPA ENTRADA CORRIENTE	COUVERCLE CONNEXION ALIM.
28	421016	CONNECTION BOARD CURRENT INPUT	REGLETA ENTRADA CORRIENTE	REGLETTE ENTRÉE DE COURRANT
29	322750	SCREW FDS SF-M5X12 PKS TORX SPER	TORNILLO FDS SF-M5X12 (ESPECIAL)*	VIS FDS SF-M5X12 PKS TORX SPER
30	140418	CLAMP UNEX REF 1201	BRIDA UNEX 1201	BRIDE UNEX REF 1201
31	322701	RELAY 12VDC	RELE 12VDC*	RELAIS 12VDC

info@zipnasklade.ru
8(800)500-69-51

Nº	REF	DENOMINATION	DENOMINACIÓN	DENOMINATION
32	322719	EXTERNAL DOSING CIRCUIT (FOR MACHINES WITH EXT.DOSING)	CIRCUITO DOSIFICACION EXTERIOR (PARA MODELOS CON DOSIF.EXTER)	CIRCUIT DOSAGE EXTERNE (POUR MACHINES AVEC DOSAGE EXT
33	322727	CIRCUIT LCBS-4-4-01 BRACKET (FOR MACHINES WITH EXT.DOSING)	SOPORTE CIRCUITO LCBS-4-4-01 (PARA MODELOS CON DOSIF.EXTER)	SUPPORT CIRCUIT LCBS-4-4-01 (POUR MACHINES AVEC DOSAGE EXT
34	321166	FERRITE SPLIT GRFC-9	FERRITA SPLIT GRFC-9	FERRITE SPLIT GRFC-9
35	140244	NUT PG-13,5 BRASS (RMS610) (FOR MACHINES ELECTR.HEATING) (FOR 240V) (FOR 1PH 2000W) (FOR 200V-208V-220V-230V-240V) (FOR 1PH 4000) (FOR 380V-400V-415V) (FOR 3PH 6000W)	TUERCA PG-13,5 LATON (RMS610) (PARA MODELOS CALEFAC.ELECTR.) . (PARA 240V) (PARA 1PH 2000W) . (PARA 200V-208V-220V-230V-240V) (PARA 1PH 4000W) . (PARA 380V-400V-415V) (PARA 3PH 6000W)	ECROU PRESSE-ETOUPE PG-13,5 LAITON (RMS610) (POUR MACHINES CHAUF.ELECTR.) (POUR 240V) (POUR 1PH 2000W) (POUR 200V-208V-220V-230V-240V) (POUR 1PH 4000W) (POUR 380V-400V-415V) (POUR 3PH 6000W)
36	140111	STUFFING-BOX EXADIN PG13,5 BRASS (RMS610) (FOR MACHINES ELECTR.HEATING) (FOR 240V) (FOR 1PH 2000W) (FOR 200V-208V-220V-230V-240V) (FOR 1PH 4000) (FOR 380V-400V-415V) (FOR 3PH 6000W)	PRENSAESTOPAS EXADIN PG13,5 LATON (RMS610) (PARA MODELOS CALEFAC.ELECTR.) . (PARA 240V) (PARA 1PH 2000W) . (PARA 200V-208V-220V-230V-240V) (PARA 1PH 4000W) . (PARA 380V-400V-415V) (PARA 3PH 6000W)	PRESSE-ETOUPE EXADIN PG13,5 LAITON (RMS610) (POUR MACHINES CHAUF.ELECTR.) (POUR 240V) (POUR 1PH 2000W) (POUR 200V-208V-220V-230V-240V) (POUR 1PH 4000W) (POUR 380V-400V-415V) (POUR 3PH 6000W)
37	129692	SELF-LOCKING NUT DIN985-8 B.TRI.M 3	TUER.AUTOBL.DIN985-8 B.TRI.M 3	ECROU AUTOBLOCANT DIN985-8 B.TRI.M 3
38	149484	WASHER DIN 125B M3 ST TRIVALENT	ARANDELA DIN 125B M3 ST TRIVALENTE	RONDELLE DIN 125B M3 ST TRIVALENT
39	132043	SELF-LOCKING NUT DIN985-8 B.TRI.M 4	TUER.AUTOBL.DIN985-8 B.TRI.M 4	ECROU AUTOBLOCANT DIN985-8 B.TRI.M 4
40	149476	BICR.WASHER B DIN125-ST 4,3	ARAN.B DIN125-ST B.TRI. 4,3	RONDELLE B DIN125-ST BICR.4,3
41	322784	PRESSURE TRANSMITTER 400.95100	TRANSM.PRESION HUBA 400.95100	PRESSOSTAT HUBA 400.95100
42	342204	SET 200...240V (FOR MACHINES ELECTR.HEATING) (FOR 3PH 6000W) (FOR 200V-208V-220V-230V-240V)	COMPLEMENTO 200...240V (PARA MODELOS CALEFAC.ELECTR.) (PARA 3PH 6000W) (PARA 200V-208V-220V-230V-240V)	ENSEMBLE 200...240V (POUR MACHINES CHAUF.ELECTR.) (POUR 3PH 6000W) (POUR 200V-208V-220V-230V-240V)
43	342238	POWER BRIDGE WIRE (FOR MACHINES ELECTR.HEATING)	CABLE PUENTE ALIMENTACION (PARA MODELOS CALEFAC.ELECTR.)	CABLE PONT ALIMENTATION (POUR MACHINES CHAUF.ELECTR.)
44	342212	HEATING SET 6000W (FOR MACHINES ELECTR.HEATING)	COMPLEMENTO CALEF. 6000W (PARA MODELOS CALEFAC.ELECTR.)	ENSEMBLE CHAUF. 6000W (POUR MACHINES CHAUF.ELECTR.)

info@kitasklade.ru
8(800)500-69-51

Nº	REF	DENOMINATION	DENOMINACIÓN	DENOMINATION
45	263434	WASHER 32X21X0,8 (RMS610) (FOR MACHINES ELECTR.HEATING) (FOR 240V) (FOR 1PH 2000W) (FOR 200V-208V-220V-230V-240V) (FOR 1PH 4000) (FOR 380V-400V-415V) (FOR 3PH 6000W)	ARANDELA 32X21X0.8 INOX (RMS610) (PARA MODELOS CALEFAC.ELECTR.) . (PARA 240V) (PARA 1PH 2000W) . (PARA 200V-208V-220V-230V-240V) (PARA 1PH 4000W) . (PARA 380V-400V-415V) (PARA 3PH 6000W)	RONDELLE 32X21X0,8 (RMS610) (POUR MACHINES CHAUF.ELECTR.) (POUR 240V) (POUR 1PH 2000W) (POUR 200V-208V-220V-230V-240V) (POUR 1PH 4000W) (POUR 380V-400V-415V) (POUR 3PH 6000W)
46	551937	PROCESSOR BOARD FIXATION BOLT ASSEMBLY (FOR TOP DISPENSER)	CONJUNTO TURRION FIJACION PLACA MICRO (PARA DOSIFICADOR SUPERIOR)	ENSEMBLE BULON FIXATION PLAQUE MICROP. (POUR BAC A PRODUITS SUPERIEUR
48	341388	PROCESSOR BOARD FIXATION PLATE (FOR TOP DISPENSER)	CHAPA FIJACION PLACA MICRO (PARA DOSIFICADOR SUPERIOR)	PLAQUE FIXATION MICROPROCES. (POUR BAC A PRODUITS SUPERIEUR
49	521393	HARNESS	CABLEADO ELECTRICO	CABLAGE
50	327056	WIRES PROTECTION SHR-20-PPB	FUNDA CABLES SHR-20-PPB	PROTECTION CABLES SHR-20-PPB
51	352237	WASHER STL-750-16-01	ABRAZADERA STL-750-16-01	RONDELLE STL-750-16-01
52	322453	COIN-METER 2 PLUG (FOR DUAL COIN-METER)	CONECTORA 2 MONEDERO (PARA MONEDERO DOBLE)	CONNECTEUR 2 MONNAYEURS (POUR MONNAYEUR DOUBLE)
	322461	COIN-METER 1 PLUG (FOR SINGLE COIN METER)	CONECTORA 1 MONEDERO (PARA MONEDERO SIMPLE)	CONNECTEUR 1 MONNAYEUR (POUR MONNAYEUR SIMPLE)
53	342246	DUOBLE HEATING HARNESS (FOR MACHINES ELECTR.HEATING)	INST. ELEC. CALEFACCION DOBLE (PARA MODELOS CALEFAC.ELECTR.)	CABLAGE CHAUFFAGE DOUBLE (POUR MACHINES CHAUF.ELECTR.)
54	411678	COIN-METER PLUG (FOR MOD. CC-CP)	CONECTORA MONEDERO (PARA MOD. CC-CP)	CONNECTEUR MONNAYEUR (POUR MOD. CC-CP)
55	411736	PLATE (COIN CTRL MODELS ONLY) (VENDING ONLY)	PLACA CIEGA (PARA MODELOS A COIN CONTROL) (SOLO VENDING)	PLAQUE (POUR MODELE COIN CONTROL) (SEULEMENT VENDING)
56	140236	COUNTERNUT PG-11 BRASS (REM025 120V USA/CAN) (RMS610) (FOR MACHINES HEATING WITHOUT) (FOR 120/200/208/220/230/240V) (FOR SINGLE-PHASE)	TUERCA PG11 LATON (REM025 120V USA/CAN) (RMS610) (PARA MODELOS SIN CALEFACCION) (PARA 120/200/208/220/230/240V) (PARA MONOFASICO)	CONTREECROU PG-11 LAITON (REM025 120V USA/CAN) (RMS610) (POUR MACHINES SENS CHAUFAGE) (POUR 120/200/208/220/230/240V (POUR MONOPHASE)
57	412312	WASHER 31X18,5X0,8 (REM025 120V USA/CAN) (RMS610) (FOR MACHINES HEATING WITHOUT) (FOR 120/200/208/220/230/240V) (FOR SINGLE-PHASE)	ARANDELA 31X18.5X0.8 INOX (REM025 120V USA/CAN) (RMS610) (PARA MODELOS SIN CALEFACCION) (PARA 120/200/208/220/230/240V) (PARA MONOFASICO)	RONDELLE 31X18,5X0,8 (REM025 120V USA/CAN) (RMS610) (POUR MACHINES SENS CHAUFAGE) (POUR 120/200/208/220/230/240V (POUR MONOPHASE)

info@zipdasklade.ru
8(800)500-69-51

Nº	REF	DENOMINATION	DENOMINACIÓN	DENOMINATION
58	140103	STUFFING-BOX EXADIN PG11 BRASS (REM025 120V USA/CAN) (RMS610) (FOR MACHINES HEATING WITHOUT) (FOR 120/200/208/220/230/240V) (FOR SINGLE-PHASE)	PRENSAESTOPAS EXADIN PG11 LATON (REM025 120V USA/CAN) (RMS610) (PARA MODELOS SIN CALEFACCION) (PARA 120/200/208/220/230/240V) (PARA MONOFASICO)	PRESSE-ETOUPES EXADIN PG11 LAITON (REM025 120V USA/CAN) (RMS610) (POUR MACHINES SENS CHAUFAGE) (POUR 120/200/208/220/230/240V (POUR MONOPHASE)
59	327668	ELECTRIC CORD SJT 1,6M (REM025 120V USA/CAN)	CORDON ELECTRICO SJT 1,6M. * (REM025 120V USA/CAN)	CORDON ELECTRIQUE SJT 1,6M (REM025 120V USA/CAN)
60	326843	MICROPROCESSOR PLATE COVER	TAPA PLACA MICROPROCESADOR	COUVERCLE PLAQUE MICROPROSSEUR
61	327908	PUSH-BUTTON PLATE (FOR MOD. CC-CP) (LOGI CTRL MODELS ONLY) (LOGI PRO MODELS ONLY)	PLACA PULSADOR (PARA MOD. CC-CP) (PARA MODELOS A LOGI CONTROL) (PARA MODELOS A LOGI PRO)	PLAQUE PULSATEUR (POUR MOD. CC-CP) (POUR MODELE LOGI CONTROL) (POUR MODELE LOGI PRO)
62	138339	PUSH-BUTTON C6061AL (FOR MOD. CC-CP)	PULSADOR C6061AL * (PARA MOD. CC-CP)	BOUTON-POUSSOIR C6061AL (POUR MOD. CC-CP)
63	340158	START-STOP PLATE (FOR MOD. CC-CP)	PLACA MARCHA-PARO CP (PARA MOD. CC-CP)	PLAQUE MARCHE-ARRET (POUR MOD. CC-CP)
64	341586	FUSE COVER	CUBRE FUSIBLE *	COUVRE FUSIBLE
65	10034882	LP WASHER KEYBOARD (LOGI PRO MODELS ONLY) (RMS610)	TECLADO LAVADORA LP (PARA MODELOS A LOGI PRO) (RMS610)	CLAVIER LAVEUSE LP (POUR MODELE LOGI PRO) (RMS610)
	550517	WASHER KEYBOARD LP (BILINGUAL USA) (LOGI PRO MODELS ONLY) (REM025)	TECLADO LAVADORA LP (USA BILINGÜE) (PARA MODELOS A LOGI PRO) (REM025)	CLAVIER LAVEUSE LP (BILINGUE USA) (POUR MODELE LOGI PRO) (REM025)
66	621086	SAFETY INSTR.LABEL EN (FOR USA AND CANADA ONLY) (FOR FRONT DISPENSER)	ETIQUETA INSTR. SEGURIDAD EN (SOLO PARA USA Y CANADA) (PARA DOSIFICADOR FRONTAL)	ETIQUETTE INSTR.SECURITE EN (SEULEMENT POUR USA ET CANADA) (POUR BAC A PRODUITS FRONTAL)
67	621219	START-STOP LABEL (LOGI CTRL MODELS ONLY)	ETIQUETA MARCHA-PARO (PARA MODELOS A LOGI CONTROL)	ETIQUETTE MARCHE-ARRET (POUR MODELE LOGI CONTROL)
68	140251	COUNTERNUT PG16 BRASS (RMS610) (FOR MACHINES ELECTR.HEATING) (FOR 200V-208V-220V-230V-240V) (FOR 1PH 6000W) (FOR 200V-208V-220V-230V-240V) (FOR 3PH 6000W)	TUERCA PG16 LATON (RMS610) (PARA MODELOS CALEFAC.ELECTR.) . (PARA 200V-208V-220V-230V-240V) (PARA 1PH 6000W) . (PARA 200V-208V-220V-230V-240V) (PARA 3PH 6000W)	CONTREECROU PG16 LAITON (RMS610) (POUR MACHINES CHAUF.ELECTR.) (POUR 200V-208V-220V-230V-240V) (POUR 1PH 6000W) (POUR 200V-208V-220V-230V-240V) (POUR 3PH 6000W)
69	140129	STUFFING-BOX EXADIN PG16 BRASS (RMS610) (FOR MACHINES ELECTR.HEATING) (FOR 200V-208V-220V-230V-240V) (FOR 1PH 6000W)	PRENSAESTOPAS EXADIN PG16 LATON (RMS610) (PARA MODELOS CALEFAC.ELECTR.) (PARA 200V-208V-220V-230V-240V) (PARA 1PH 6000W)	PRESSE-ETOUPES EXADIN PG16 LAITON (RMS610) (POUR MACHINES CHAUF.ELECTR.) (POUR 200V-208V-220V-230V-240V) (POUR 1PH 6000W)

info@zippasklade.ru
8(800)500-69-51

Nº	REF	DENOMINATION	DENOMINACIÓN	DENOMINATION
		(FOR 200V-208V-220V-230V-240V) (FOR 3PH 6000W)	(PARA 200V-208V-220V-230V-240V) (PARA 3PH 6000W)	(POUR 200V-208V-220V-230V-240V) (POUR 3PH 6000W)
70	430223	EXTERNAL DOSING WIRE (REM025)	CABLE DOSIFICACION EXT. (REM025)	CABLE DOSAGE EXTERNE (REM025)
71	423202	FILTER EMC MS-610	FILTRO EMC MS-610	FILTRE EMC MS-610
72	332601	SHEATH-LODGING DGB-7	PASAMUROS DGB-7	LOGEMENT DGB-7
73	327353	COIN-METER EMP 500 EUROS (FOR PROGRAMMABLE COIN.METER) (FOR MODELS WITH EUR)	MONEDERO EMP 500 EUROS (PARA MONEDERO PROGRAMABLE) (PARA MODELOS CON EUR)	MANNAYEUR EMP 500 EUROS (POUR MONNAYEUR PROGRAMMABLE) (POUR MODELES AVEC EUR)
	411223	COIN-METER EMP 500 NOT EUROS (FOR PROGRAMMABLE COIN.METER) (FOR MODELS WIHTOUT EUR)	MONEDERO EMP 500 NO EUROS (PARA MONEDERO PROGRAMABLE) (PARA MODELOS SIN EUR)	MONNAYEUR EMP 500 NO EUROS (POUR MONNAYEUR PROGRAMMABLE) (POUR MODELES SANS EUR)
74	340125	COIN-METER PLATE (FOR SINGLE COIN METER) (FOR PROGRAMMABLE COIN.METER)	PLACA MONEDERO UNIVERSAL (PARA MONEDERO SIMPLE) (PARA MONEDERO PROGRAMABLE)	PLAQUE MONNAYEUR (POUR MONNAYEUR SIMPLE) (POUR MONNAYEUR PROGRAMMABLE)
		WITHOUT ILLUSTRATION	SIN ILUSTRACION	SANS ILLUSTRATION
	796839	VENDING VN SERIE 6 SET	KIT VENDING VN SERIE 6	KIT VENDING VN SERIE 6
	614495	KIT PROFIT PLUS HS-6008/MS-610 (FOR MOD. HS-6008, MS-610 AND RMS610) (EXCEPT FOR USA AND CANADA)	KIT PROFIT PLUS HS-6008/MS-610 (PARA MOD. HS-6008, MS-610 Y RMS610) (EXCEPTO PARA USA Y CANADA)	KIT PROFIT PLUS HS-6008/MS-610 (POUR MOD. HS-6008, MS-610 ET RMS610) (SAUF POUR USA ET CANADA)
	565895	COMMUNICATION BOARD COM-C *	PLACA COMUNICACIONES COM-C *	PLAQUE COMMUNICATIONS COM-C/609164

info@zipnasklade.ru
8(800)500-69-51

DOSIFICADOR FRONTAL

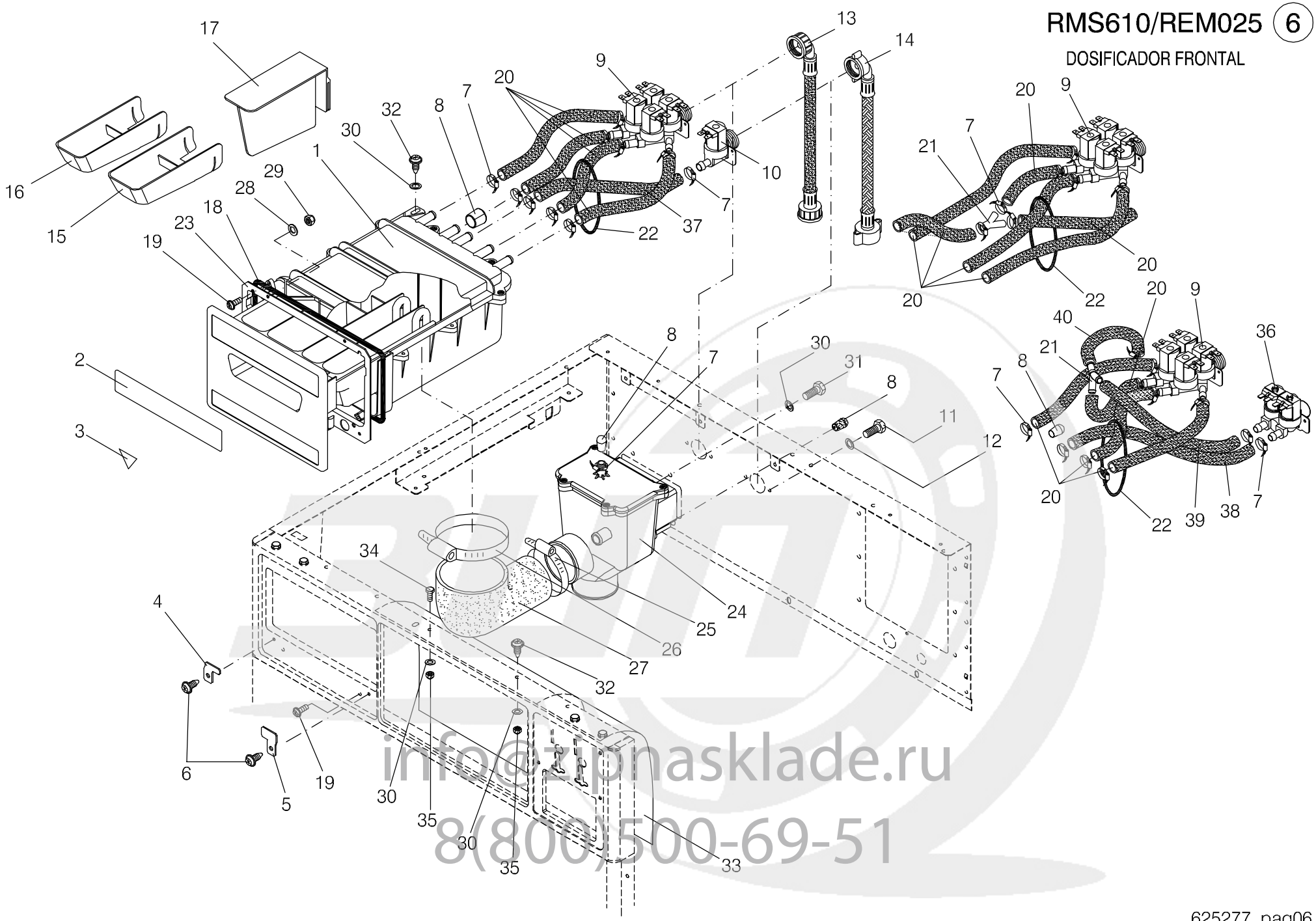

info@zipnasklade.ru
8(800)500-69-51

Nº	REF	DENOMINATION	DENOMINACIÓN	DENOMINATION
		FRONT SOAP DISPENSER	DOSIFICADOR FRONTAL .	BAC A PRODUITS FRONTAL
1	339135	SOAP DISPENSER SET	CONJUNTO DOSIFICADOR	ENSEMBLE BAC A PRODUITS
	339101	ASPIRATION HOSE	TUBO ASPIRACION	TUBE ASPIRATION
	333054	ANTISPLASH	ANTISALPICADERO	ANTIECLABOUSSEMENT
	339184	PRODUCT DISTRIBUTOR	DISTRIBUIDOR PRODUCTOS	DISTRIBUTEUR DE PRODUITS
	327825	WATER INLET RACCORD	RACOR ENTRADA AGUA	RACCORD ENTREE EAU
2	10560993	SOAP DISPENSER LABEL	ETIQUETA DOSIFICADOR	ÉTIQUETTE BAC A PRODUITS
	340091	SOAP DISPENSER PLATE USA/CAN (REM025 COIN CONTROL)	PLACA DOSIFICADOR USA/CAN (REM025 COIN CONTROL)	PLAQUE BAC A PRODUITS USA/CAN (REM025 COIN CONTROL)
3	10588960	SPLASH HAZARD LABEL	ETIQUETA PELIGRO SALPICADURAS	ÉTIQUETTE RISQUE DE PROJECTIONS
4	321828	SOAP DISPENSER PIECE	TOPE DOSIFICADOR	ARRÊT BAC A PRODUITS
5	326595	SOAP DISPENSER PIECE	TOPE DOSIFICADOR	ARRÊT BAC A PRODUITS
6	320911	SCREW FTX512FT85T INOX A2 M5X12	TOR.FTX512FT85T INOX A2 M5X12 (ESPECIAL)	VIS FTX512FT85T INOX A2 M5X12
7	155150	HOSE CLIP ASFA-L W2 8-16	ABRAZADERA ASFA-L W2 8-16	COLLIER ASFA-L W2 8-16
8	156679	CONICAL END-PIECE R-16 D10	TOPE CONICO REPRIMSA R-16 D10	BOUCHON CONIQUE R-16 D10
9	323311	4 TRACK ELECTROVALVE 389 180ºC	ELECTROV.CUADRUPLE 389 180º *	ELECTROVANNE 4 VOIES 389 180ºC
	332296	COIL 255043000000 12VCC	BOBINA 255043000000 12VCC	BOBINE 255043000000 12VCC
	300194	YELLOW CASE 30053	ESTUCHE AMARILLO 30053	BOITE JAUNE 30053
	300202	INTEGRAL GUIDE-MEMBRANE 30696	MEMBRANA-GUIA INTEGRAL 30696 *	MEMBRANE-GUIDE INTEGRALE 30696
	344234	4 TRACK ELECTROVALVE (REM025 COIN CONTROL)	ELECTROVALVULA CUATRO VIAS (REM025 COIN CONTROL)	ELECTROVANNE 4 VOIES (REM025 COIN CONTROL)
	332296	COIL 255043000000 12VCC	BOBINA 255043000000 12VCC	BOBINE 255043000000 12VCC
	300194	YELLOW CASE 30053	ESTUCHE AMARILLO 30053	BOITE JAUNE 30053
	300202	INTEGRAL GUIDE-MEMBRANE 30696	MEMBRANA-GUIA INTEGRAL 30696 *	MEMBRANE-GUIDE INTEGRALE 30696
10	323329	SIMPLE ELECTROVALVE 329 180	ELECTROV.SIMPLE 329 180	ELECTROVANNE SIMPLE 329 180
	332296	COIL 255043000000 12VCC	BOBINA 255043000000 12VCC	BOBINE 255043000000 12VCC
	300194	YELLOW CASE 30053	ESTUCHE AMARILLO 30053	BOITE JAUNE 30053
	300202	INTEGRAL GUIDE-MEMBRANE 30696	MEMBRANA-GUIA INTEGRAL 30696 *	MEMBRANE-GUIDE INTEGRALE 30696
11	146258	BIC.HEX SCREW DIN933-4.8 M4X10	TOR.EX.DIN933-4.8 B.TRI.M 4X10	VIS HEX DIN933-4.8 BICR.M 4X10

info@zipnasklade.ru
8(800)500-69-51

Nº	REF	DENOMINATION	DENOMINACIÓN	DENOMINATION
12	149476	BICR.WASHER B DIN125-ST 4,3	ARAN.B DIN125-ST B.TRI. 4,3	RONDELLE B DIN125-ST BICR.4,3
13	323477	WATER INLET AF DI10MM L1,5M	TUBO ENTRADA AF DI10MM L1,5M *	FLEXIBLE ENTRÉE AFDI10MM L1,5M
14	323493	WATER INLET AC DI10MM L1,5M	TUBO ENTRADA AC DI10MM L1,5M *	FLEXIBLE ENTRÉE ACDI10MM L1,5M
15	327262	WASH SOAP DISPENSER (REM025 LOGI CONTROL)	DOSIFICADOR LAVADO (REM025 LOGI CONTROL)	BAC A PRODUITS LAVAGE (REM025 LOGI CONTROL)
16	327635	PREWASH SOAP DISPENSER (REM025)	DOSIFICADOR PRELAVADO (REM025)	BAC A PRODUITS PRELAVAGE (REM025)
17	332379	WASH LEAD (REM025 COIN CONTROL)	TAPA LAVADO (REM025 COIN CONTROL)	COUVERCLE LAVAGE (REM025 COIN CONTROL)
18	341040	FRONT SOAP DISPENSER GASKET	JUNTA DOSIFICADOR FRONTAL	JOINT BAC A PRODUITS FRONTAL
19	328062	SCREW 416RFX87T INOXA2 4X16	TORNILLO 416RFX87T INOXA2 4X16(ESPECIAL)	VIS 416RFX87T INOXA2 4X16
20	323469	1 METER HOSE PARIGI D10XD16	1 METRO TUBO PARIGI D10XD16	1 METRE TUBE PARIGI D10XD16
21	152165	BRANCH (REM025 COIN CONTROL)	BIFURCACION (REM025 COIN CONTROL)	BIFURCATION (REM025 COIN CONTROL)
22	193995	TORIC GASKET 65X71X3	JUNTA TORICA 65X71X3	JOINT TORIQUE 65X71X3
23	340976	GASKET SOAP DISPENSER FRAME	MARCO JUNTA DOSIFICADOR	CADRE JOINT BAC A PRODUITS
24	339341	DISTRIBUTOR SET	CONJUNTO DISTRIBUIDOR	ENSEMBLE DISTRIBUTEUR
25	132290	CLAMP 301730-8 D50-70	ABRAZADERA 301730-8 D50- 70	BRIDE 301730-8 D50-70
26	132340	CLAMP REF.30173380-2 D80-100	ABRAZADERA REF.30173380-2 D80-100	BRIDE REF.30173380-2 D80-100
27	339556	DISPENSER HOLE	TUBO DOSIFICADOR	TUBE BAC A PRODUITS
28	149484	WASHER DIN 125B M3 ST TRIVALENT	ARANDELA DIN 125B M3 ST TRIVALENTE	RONDELLE DIN 125B M3 ST TRIVALENT
29	129692	SELF-LOCKING NUT DIN985-8 B.TRI.M 3	TUER.AUTOBL.DIN985-8 B.TRI.M 3	ECROU AUTOBLOCANT DIN985-8 B.TRI.M 3
30	149534	BICR.WASHER B DIN125-ST 5,3	ARAN.B DIN125-ST BICR. 5,3	RONDELLE B BICR.DIN125-ST 5,3
31	146274	BICR.HEX SCREW DIN933-8 M-5X10	TOR.EX.DIN933-8.8 B.TRI.M 5X10	VIS HEX.BICR.DIN933-8.8 M-5X10
32	322750	SCREW FDS SF-M5X12 PKS TORX SPER	TORNILLO FDS SF-M5X12 (ESPECIAL)*	VIS FDS SF-M5X12 PKS TORX SPER
33	430959	MICROPROCESSOR PLATE COVER (COIN CTRL MODELS ONLY)	TAPA PLACA MICROPROCESADOR (PARA MODELOS A COIN CONTROL)	COUVERCLE PLAQUE MICROPROCES. (POUR MODELE COIN CONTROL)
	430967	MICROPROCESSOR PLATE COVER (LOGI CTRL MODELS ONLY)	TAPA PLACA MICROPROCESADOR (PARA MODELOS A LOGI CONTROL)	COUVERCLE PLAQUE MICROPROCES. (POUR MODELE LOGI CONTROL)
34	327064	HEX SCREW DIN 933 8,8 M5x12 TRIVALENT	TORNILLO HEXAGONAL DIN 933 8,8 M5x12 TRI	VIS HEXAGONALE DIN 933 8,8 M5x12 TRIVALE
35	176826	SELF-LOCKING NUT DIN985-8 B.TRI.M5	TUER.AUTOBL.DIN985-8 B.TRI.M5	ECROU AUTOBLOCANT DIN 985-8 B.TRI.M5

info@zipnasklade.ru
8(800)500-69-51

Nº	REF	DENOMINATION	DENOMINACIÓN	DENOMINATION
36	427112	DOUBLE ELECTROV. 349 180º 12VCC* (LOGI PRO MODELS ONLY)	ELECTROV.DOBLE 349 180º 12VCC* (PARA MODELOS A LOGI PRO)	ELECTROV.DOUBLE 349 180º 12VCC* (POUR MODELE LOGI PRO)
37	10919850	WATER INLET TUBE	TUBO ENTRADA AGUA	TUBE ENTREE EAU
38	10938322	WATER INLET HOSE	TUBO ENTRADA AGUA	TUBE ENTREE EAU
39	10938330	WATER INLET HOSE	TUBO ENTRADA AGUA	TUBE ENTREE EAU
40	10940252	WATER INLET HOSE	TUBO ENTRADA AGUA	TUBE ENTREE EAU
41	10938389	WATER INLET HOSE	TUBO ENTRADA AGUA	TUBE ENTREE EAU
42	10938397	WATER INLET HOSE	TUBO ENTRADA AGUA	TUBE ENTREE EAU
		WITHOUT ILLUSTRATION	SIN ILUSTRACION	SANS ILLUSTRATION
	798009	EXT.DOSING KIT HS-6008 MS-610	KIT DOSIF.EXT.HS-6008 MS-610	KIT DOSAGE EXT.HS-6008 MS-610
	796870	SIPHON CLEANING KIT	KIT LIMPIEZA SIFONES	KIT NETTOYAGE SIPHON

info@zipnasklade.ru
8(800)500-69-51

RMS610/REM025 7

DOSIFICADOR SUPERIOR

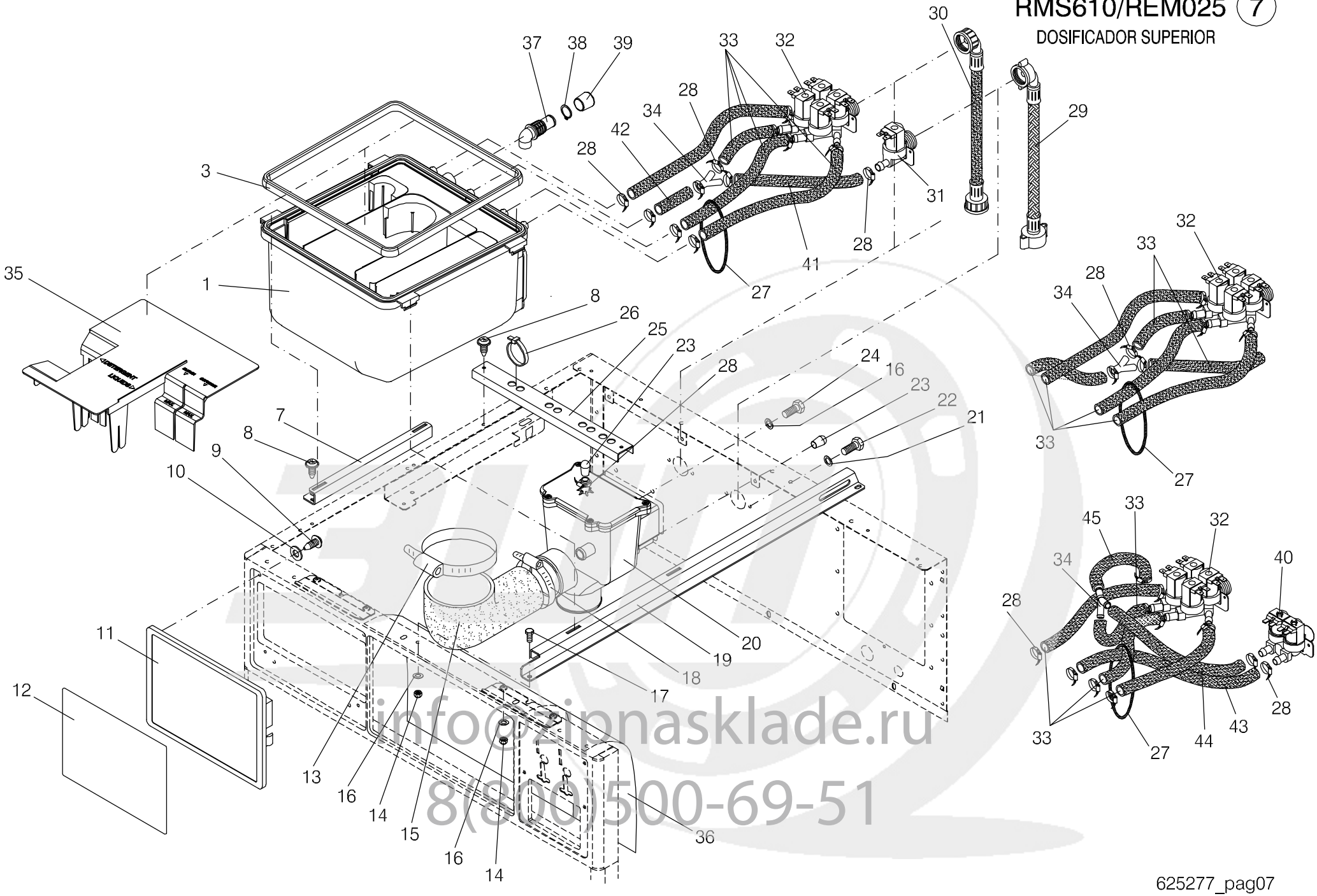

info@zipnasklade.ru
8(800)500-69-51

Nº	REF	DENOMINATION	DENOMINACIÓN	DENOMINATION
		UPPER SOAP DISPENSER	DOSIFICADOR SUPERIOR .	BAC A PRODUITS
1	511584	SOAP DISPENSER SET	CONJUNTO DOSIFICADOR	ENSEMBLE BAC A PRODUITS
	339598	ASPIRATION HOSE	TUBO ASPIRACION	TUBE ASPIRATION
3	321430	SOAP DISPENSER GASKET	JUNTA DOSIFICADOR	JOINT BACS A PRODUITS
7	350702	UPPER SOAP DISPENSER BRACKET	SOPORTE DOSIFICADOR SUPERI	SUPPORT BAC PRODUITS SUPERIEUR
8	322750	SCREW FDS SF-M5X12 PKS TORX SPER	TORNILLO FDS SF-M5X12 (ESPECIAL)*	VIS FDS SF-M5X12 PKS TORX SPER
9	339374	SCREW RF81T 4X8	TORNILLO RF81T 4X8 (ESPECIAL)	VIS RF81T 4X8
10	287920	WASHER 14X4,5X2	ARANDELA 14X4.5X2 TRIVALEN.	RONDELLE 14X4,5X2
11	339150	CONTROL PANEL PLATE	CARATULA PANEL DE MANDOS	PLAQUE TABLEAU DE COMMANDES
12	10699155	LABEL	ETIQUETA	ÉTIQUETTE
	340042	SAFETY INSTR.PLATE EN (FOR USA AND CANADA ONLY)	PLACA INSTR. SEGURIDAD IN. (SOLO PARA USA Y CANADA)	PLAQUE INSTR SECURITE EN (SEULEMENT POUR USA ET CANADA)
	344002	ETIQUETA INSTR. FUNCION. JA (LOGI CTRL MODELS ONLY) (JAPENESE)	ETIQUETA INSTR. FUNCION. JA (PARA MODELOS A LOGI CONTROL) (JAPONES)	ETIQUETA INSTR. FUNCION. JA (POUR MODELE LOGI CONTROL) (JAPONAIS)
	340364	SAFETY INSTR.PLATE JA (COIN CTRL MODELS ONLY) (JAPENESE)	PLACA INSTR. SEGURIDAD JA. (PARA MODELOS A COIN CONTROL) (JAPONES)	PLAQUE INSTR SECURITE JA (POUR MODELE COIN CONTROL) (JAPONAIS)
13	132340	CLAMP REF.30173380-2 D80-100	ABRAZADERA REF.30173380-2 D80-100	BRIDE REF.30173380-2 D80-100
14	176826	SELF-LOCKING NUT DIN985-8 B.TRI.M5	TUER.AUTOBL.DIN985-8 B.TRI.M5	ECROU AUTOBLOCANT DIN 985-8 B.TRI.M5
15	339358	TOP SOAP DISPENSER HOSE	TUBO DOSIFICADOR SUPERIOR	TUBE BAC A PRODUITS SUPERIEUR
16	149534	BICR.WASHER B DIN125-ST 5,3	ARAN.B DIN125-ST BICR. 5,3	RONDELLE B BICR.DIN125-ST 5,3
17	327064	HEX SCREW DIN 933 8,8 M5x12 TRIVALENT	TORNILLO HEXAGONAL DIN 933 8,8 M5x12 TRI	VIS HEXAGONALE DIN 933 8,8 M5x12 TRIVALE
18	132290	CLAMP 301730-8 D50-70	ABRAZADERA 301730-8 D50- 70	BRIDE 301730-8 D50-70
19	440800	UPPER SOAP DISPENSER BRACKET	SOPORTE DOSIFICADOR SUPERI	SUPPORT BAC PRODUITS SUPERIEUR
20	339341	DISTRIBUTOR SET	CONJUNTO DISTRIBUIDOR	ENSEMBLE DISTRIBUTEUR
21	149476	BICR.WASHER B DIN125-ST 4,3	ARAN.B DIN125-ST B.TRI. 4,3	RONDELLE B DIN125-ST BICR.4,3
22	146258	BIC.HEX SCREW DIN933-4.8 M4X10	TOR.EX.DIN933-4.8 B.TRI.M 4X10	VIS HEX DIN933-4.8 BICR.M 4X10
23	156679	CONICAL END-PIECE R-16 D10	TOPE CONICO REPRIMSA R-16 D10	BOUCHON CONIQUE R-16 D10
24	146274	BICR.HEX SCREW DIN933-8 M-5X10	TOR.EX.DIN933-8.8 B.TRI.M 5X10	VIS HEX.BICR.DIN933-8.8 M-5X10

info@zipnasklade.ru
8(800)500-69-51

Nº	REF	DENOMINATION	DENOMINACIÓN	DENOMINATION
25	423418	HOSE FIXATION PIECE	PERFIL FIJACION TUBOS	PIECE FIXATION TUBES
26	140525	CLAMP 2244-0	BRIDA UNEX 2244-0 *	BRIDE 2244-0
27	341545	TORIC GASKET 150X158X4	JUNTA TORICA 150X158X4	JOINT TORIQUE 150X158X4
28	155150	HOSE CLIP ASFA-L W2 8-16	ABRAZADERA ASFA-L W2 8-16	COLLIER ASFA-L W2 8-16
29	323493	WATER INLET AC DI10MM L1,5M	TUBO ENTRADA AC DI10MM L1,5M *	FLEXIBLE ENTRÉE ACDI10MM L1,5M
30	323477	WATER INLET AF DI10MM L1,5M	TUBO ENTRADA AF DI10MM L1,5M *	FLEXIBLE ENTRÉE AFDI10MM L1,5M
31	323329	SIMPLE ELECTROVALVE 329 180	ELECTROV.SIMPLE 329 180	ELECTROVANNE SIMPLE 329 180
	332296	COIL 255043000000 12VCC	BOBINA 255043000000 12VCC	BOBINE 255043000000 12VCC
	300194	YELLOW CASE 30053	ESTUCHE AMARILLO 30053	BOITE JAUNE 30053
	300202	INTEGRAL GUIDE-MEMBRANE 30696	MEMBRANA-GUIA INTEGRAL 30696 *	MEMBRANE-GUIDE INTEGRALE 30696
32	511212	4 TRACK ELECTROVALVE 389 180ºC	ELECTROV.CUADRUPLE 389 180º *	ELECTROVANNE 4 VOIES 389 180ºC
	156265	REGULATOR 3 L/MIN (BLACK)	REGULADOR DE 3 L/MIN. (NEGRO)	REGULATEUR 3 L/MIN (NOIR)
	332296	COIL 255043000000 12VCC	BOBINA 255043000000 12VCC	BOBINE 255043000000 12VCC
	510933	REGULATOR 4 L/MIN.RED	REGULADOR DE 4L/MIN.ROJO CLARO	REGULATEUR 4 L/MIN ROUGE
	300194	YELLOW CASE 30053	ESTUCHE AMARILLO 30053	BOITE JAUNE 30053
	300202	INTEGRAL GUIDE-MEMBRANE 30696	MEMBRANA-GUIA INTEGRAL 30696 *	MEMBRANE-GUIDE INTEGRALE 30696
	511147	4 TRACK ELECTROVALVE	ELECTROVALVULA CUATRO VIAS	ELECTROVANNE 4 VOIES
	156265	REGULATOR 3 L/MIN (BLACK)	REGULADOR DE 3 L/MIN. (NEGRO)	REGULATEUR 3 L/MIN (NOIR)
	332296	COIL 255043000000 12VCC	BOBINA 255043000000 12VCC	BOBINE 255043000000 12VCC
	510933	REGULATOR 4 L/MIN.RED	REGULADOR DE 4L/MIN.ROJO CLARO	REGULATEUR 4 L/MIN ROUGE
	300194	YELLOW CASE 30053	ESTUCHE AMARILLO 30053	BOITE JAUNE 30053
	156257	REGULATOR 8 L/MIN (RED)	REGULADOR DE 8 L/MIN. (ROJO)	REGULATEUR 8 L/MIN (ROUGE)
	300202	INTEGRAL GUIDE-MEMBRANE 30696	MEMBRANA-GUIA INTEGRAL 30696 *	MEMBRANE-GUIDE INTEGRALE 30696
33	323469	1 METER HOSE PARIGI D10XD16	1 METRO TUBO PARIGI D10XD16	1 METRE TUBE PARIGI D10XD16
34	152165	BRANCH	BIFURCACION	BIFURCATION
35	344101	SOAP DOSING INSERTO (REM025 COIN CONTROL)	INSERTO DOSIFICADOR (REM025 COIN CONTROL)	INSERTO BAC A PRODUITS (REM025 COIN CONTROL)
36	430959	MICROPROCESSOR PLATE COVER (REM025 COIN CONTROL)	TAPA PLACA MICROPROCESADOR (REM025 COIN CONTROL)	COUVERCLE PLAQUE MICROPROCES. (REM025 COIN CONTROL)

info@zipnasklade.ru
8(800)500-69-51

Nº	REF	DENOMINATION	DENOMINACIÓN	DENOMINATION
	430967	MICROPROCESSOR PLATE COVER (REM025 LOGI CONTROL)	TAPA PLACA MICROPROCESADOR (REM025 LOGI CONTROL)	COUVERCLE PLAQUE MICROPROCES. (REM025 LOGI CONTROL)
37	321349	WATER INLET RACCORD	RACOR ENTRADA AGUA DIRECTA	RACCORD ENTREE EAU
38	131508	FLEXIBLE RING E-17 DIN 471	ANILLO ELASTICO E-17 DIN 471	BAGUE ELASTIQUE E-17 DIN 471
39	156687	CONICAL END-PIECE R-16 D16	TOPE CONICO REPRIMSA R-16 D16	ARRET CONIQUE R-16 D16
40	427112	DOUBLE ELECTROV. 349 180º 12VCC* (LOGI PRO MODELS ONLY)	ELECTROV.DOBLE 349 180º 12VCC* (PARA MODELOS A LOGI PRO)	ELECTROV.DOUBLE 349 180º 12VCC* (POUR MODELE LOGI PRO)
41	10938322	WATER INLET HOSE	TUBO ENTRADA AGUA	TUBE ENTREE EAU
42	10938330	WATER INLET HOSE	TUBO ENTRADA AGUA	TUBE ENTREE EAU
43	10938405	WATER INLET HOSE	TUBO ENTRADA AGUA	TUBE ENTREE EAU
44	10938389	WATER INLET HOSE	TUBO ENTRADA AGUA	TUBE ENTREE EAU
45	10938397	WATER INLET HOSE	TUBO ENTRADA AGUA	TUBE ENTREE EAU
		WITHOUT ILLUSTRATION	SIN ILUSTRACION	SANS ILLUSTRATION
	798009	EXT.DOSING KIT HS-6008 MS-610	KIT DOSIF.EXT.HS-6008 MS-610	KIT DOSAGE EXT.HS-6008 MS-610
	796870	SIPHON CLEANING KIT	KIT LIMPIEZA SIFONES	KIT NETTOYAGE SIPHON

info@zipnasklade.ru
8(800)500-69-51