www.girbau.com

GIRBAU GROUP
LAUNDRY EQUIPMENT

| Mod. | From serial no.<br>A partir máq. nº | Until serial no.<br>Hasta máq. nº |
|---|---|---|
| **MS-613** | 2.030.001 | 2.030.697 |
| **EM030** | 1.380.001 | 1.380.056 |

# Parts Handbook for Washers
# Manual de Despiece para lavadoras
# Notice Vues Eclatées pour laveuses

# MS-613 / EM030


**GIRBAU, SA**
Crta de Manlleu, km. 1
08500 VIC (Barcelona) • SPAIN

**Comercial:**
Tel.(+ 34) 902 300 359
comercial@girbau.es

**Internacional:**
Tel.(+ 34) 938 862 219
sales@girbau.es

**Posventa:**
Tel.(+ 34) 902 300 357
sat@girbau.es

Para **USA y CANADÁ:**
**CONTINENTAL GIRBAU Inc.**
2500 State Road 44
WI 54904 Oshkosh • USA
Tel. 1(920) 231-8222
info@continentalgirbau.com
www.continentalgirbau.com



info@zipnasklade.ru
8(800)500-69-51


**Parts Handbook**
**Despiece**
**Vues Eclatées**

**MS-613**
**EM030**


Cod. 408351 F
Rev. 00/0609

## NOTES TO USE PARTS LIST

Sheets no. 1,2,3,4,5,10,13:
Are common for all versions.

Sheets no. 6, 11:
Logi Control

Sheets no. 6, 12:
Coin Control

Sheet no. 7:
Logi Control & Coin Control with high temperature valve

Sheet no. 14:
Electric heating

Sheet no. 15:
Steam heating

Sheet no. 8:
EM030 Coin Control

Sheet no. 9:
EM030 Coin Control with high temperature valve

## ACLARACIONES PARA EL USO DEL DESPIECE

Hojas nº 1,2,3,4,5,10,13:
Son comunes a todas las variantes.

Hojas nº 6, 11:
Logi Control

Hojas nº 6, 12:
Coin Control

Hoja nº 7:
Logi Control y Coin Control con válvula alta temperatura

Hoja nº 14:
Calefacción eléctrica

Hoja nº 15:
Calefacción a vapor

Hoja nº 8:
EM030 Coin Control

Hoja nº 9:
EM030 Coin Control con válvula alta temperatura

## NOTES UTILISATION VUES ECLATEES

Feuilles no.1,2,3,4,5,10,13:
Sont communes à toutes les versions.

Feuilles no. 6, 11:
Logi Control

Feuilles no. 6, 12:
Coin Control

Feuille no. 7:
Logi Control et Coin Control avec vanne haute température

Feuille no. 14:
Chauffage électrique

Feuille no. 15:
Chauffage à vapeur

Feuille no. 8:
EM030 Coin Control

Feuille no. 9:
EM030 Coin Control avec vanne haute température

info@zipnasklade.ru
8(800)500-69-51

**VERY IMPORTANT:**
Before ordering parts be sure they have not been modified. Check it on modification sheet, after the corresponding sheet.

**MUY IMPORTANTE:**
Al pedir una pieza cerciorarse antes de que la misma no ha sido modificada. Si lo hubiese sido, estaría situada como hoja de modificaciones, detrás de la hoja correspondiente.

**TRES IMPORTANT:**
Avant de commander une pièce, s'assurer qu'elle n'a pas été modifiée. Le vérifier sur feuille de modifications, derrière la feuille correspondante.

info@zipnasklade.ru
8(800)500-69-51

MS-613
Pag. 01

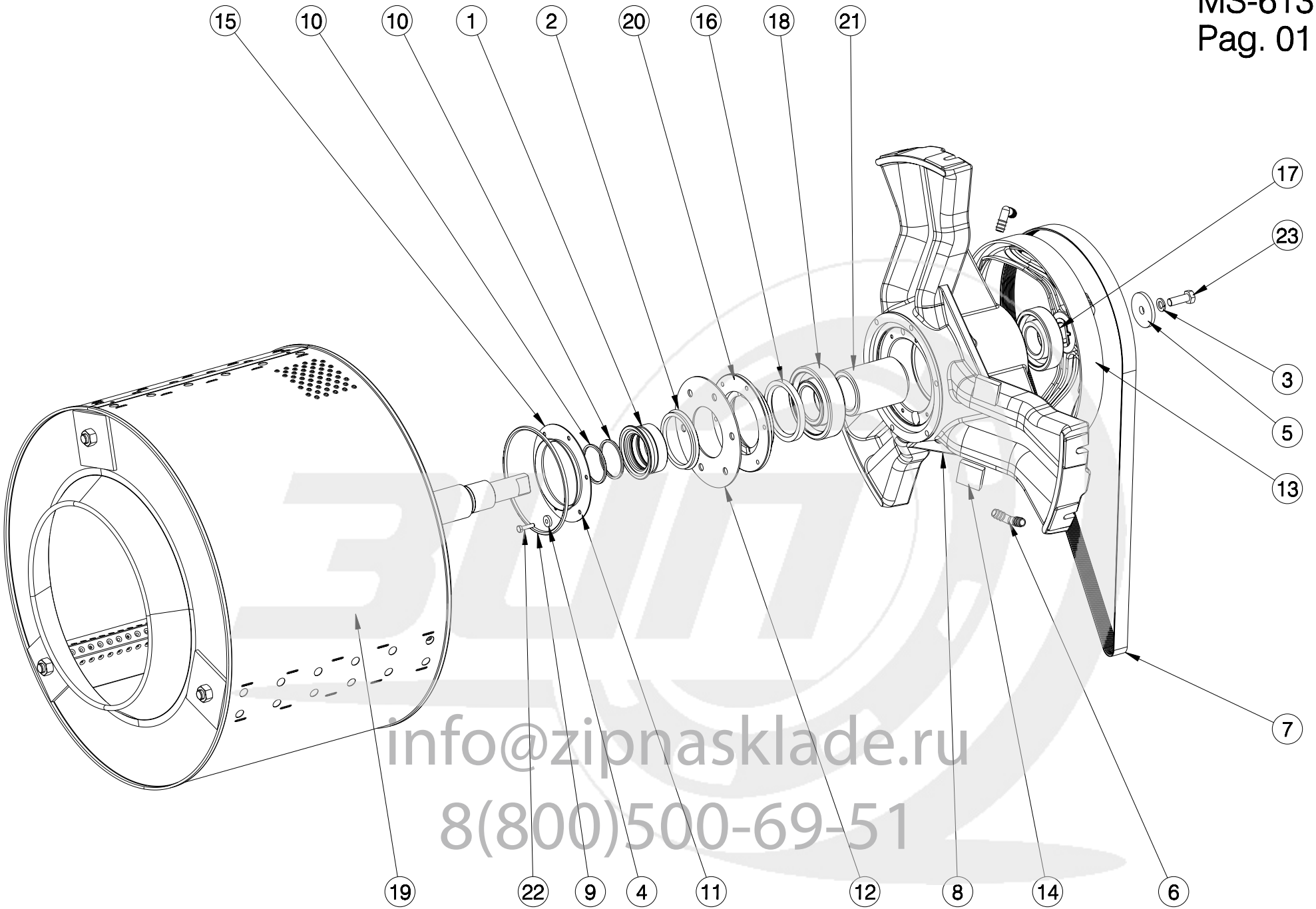


info@zipnasklade.ru
8(800)500-69-51

| Nº | REF | DENOMINATION | DENOMINACIÓN | DENOMINATION |
|---|---|---|---|---|
| 1 | 428250 | SEAL RING | ANILLO RETENES | BAGUE RESERVES |
| 2 | 343723 | RING V-RING V-80A VITON | ANILLO V-RING V-80A VITON | 149823V-RING V-80A VITON |
| 3 | 149823 | GROWER WASHER A12 DIN127 BICR. | ARAN.GROWER A12 DIN127 B.TRI. | RONDELLE GROWER A12 DIN127 |
| 4 | 422220 | WASHER D18XD6.5X4 | ARANDELA 18X6.5X4 INOX | RONDELLE D18XD6.5X4 |
| 5 | 238048 | WASHER D57XD13X6 | ARANDELA 57X13X6 TRIVALEN. | RONDELLE D57XD13X6 |
| 6 | 193904 | HOSE ELBOW 3/8" RE. 46602 | CODO MANGUERA 3/8" REF.46602 | COUDE TUYAU 3/8" REF. 46602 |
| 7 | 342493 | ESTR.BELT 11PJ651+-6 | CORREA ESTR.11PJ1651±6 | COURROIE ESTR. 11PJ651+-6 |
| 8 | 427203 | BEARING BOX | ESTRELLA CAJA COJINETES | BOITE ROULEMENTS |
| 9 | 340927 | TORIC GASKET 166X178X6 NBR | JUNTA TORICA 166X178X6 NBR | JOINT TORIQUE 166X178X6 NBR |
| 10 | 340935 | TORIC GASKET 57X65X4 NBR70 | JUNTA TORICA 57X65X4 NBR70 | JOINT TORIQUE 57X65X4 NBR70 |
| 11 | 181321 | TORIC GASKET 6X12X3 | JUNTA TORICA 6X12X3 | JOINT TORIQUE 6X12X3 |
| 12 | 428276 | PLATE V-RING | PLATINA V-RING | PLATINE V-RING |
| 13 | 318121 | BASKET PULLEY | POLEA TAMBOR L-2630* | POULIE TAMBOUR |
| 14 | 431205 | PRESSOSTAT HOSE PROTECTION | PROTECCION TUBO PRESOSTATO | PROTECTION TUBE PRESSOSTAT |
| 15 | 428284 | PROTECTIOM V-RING | PROTECCION V-RING | PROTECTION V-RING |
| 16 | 121897 | SEAL 78X100X10 BA | RETEN 78X100X10 BA | RESERVE 78X100X10 BA |
| 17 | 128686 | BEARING 6309 ZZ | RODAMIENTO 6309-2Z | ROULEMENT 6309 ZZ |
| 18 | 340901 | BEARING 6311-2RS1 | RODAMIENTO 6311-2RS1 | ROULEMENT 6311-2RS1 |
| 19 | 444422 | TAMBOR | TAMBOR | TAMBOR |
| 20 | 428268 | SEAL-HOLDER COVER | TAPA PORTA-RETEN | COUVERCLE PORTE-RESERVE |
| 21 | 340836 | BEARING END-PIECE | TOPE COJINETES | ARRET ROULEMENTS |
| 22 | 144915 | INOX HEX SCREW DIN933 M 6X25 | TOR.EX.DIN933INOX A2-70 M 6X25 | VIS HEX INOX DIN933 M 6X25 |
| 23 | 176883 | BIC.HEX SCREW DIN933-8 M12X35 | TOR.EX.DIN933-8.8 B.TRI.M12X35 | VIS HEX DIN933-8,8 BICR.M12X35 |

info@zipnasklade.ru
8(800)500-69-51

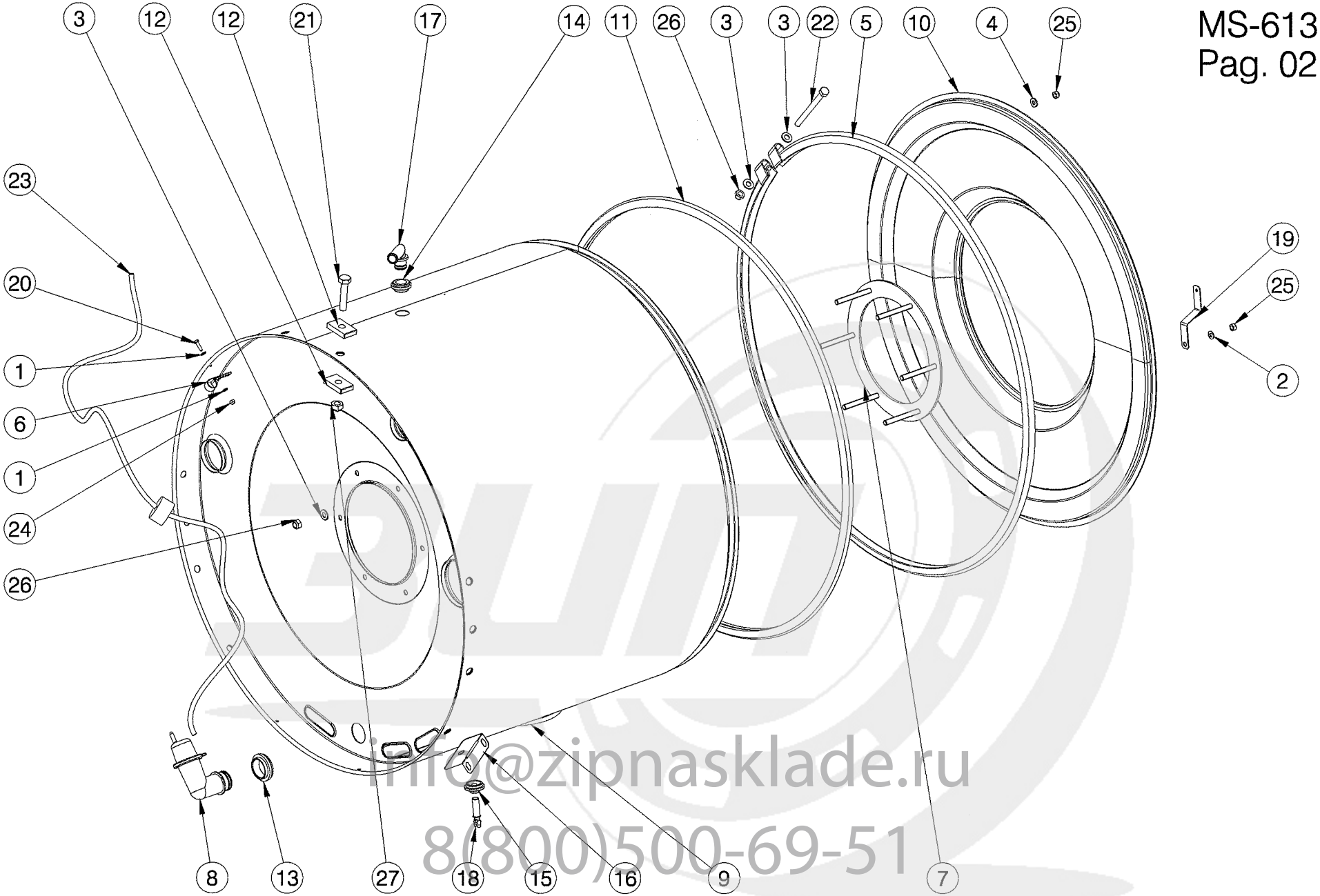


info@zipnasklade.ru
8(800)500-69-51

| Nº | REF | DENOMINATION | DENOMINACIÓN | DENOMINATION |
|---|---|---|---|---|
| 1 | 149476 | BICR.WASHER B DIN125-ST 4,3 | ARAN.B DIN125-ST B.TRI. 4,3 | RONDELLE B DIN125-ST BICR.4,3 |
| 2 | 149526 | BICR.WASHER B DIN125-ST 6,4 | ARAN.B DIN125-ST B.TRI. 6,4 | RONDELLE B DIN125-ST BICR.6,4 |
| 3 | 149518 | BICR.WASHER B DIN125-ST 8,4 | ARAN.B DIN125-ST B.TRI. 8,4 | RONDELLE.B DIN125-ST BICR.8,4 |
| 4 | 432872 | WASHER 14X6.4X2 | ARANDELA 14X6.4X2 INOX | RONDELLE 14X6.4X2 |
| 5 | 430298 | OUTER-DRUM FIXING RING | ARO FIJACION ENVOLVENTE | BAGUE FIXATION CUVE |
| 6 | 140418 | CLAMP UNEX REF 1201 | BRIDA UNEX 1201 | BRIDE UNEX REF 1201 |
| 7 | 431577 | OUTER-DRUM PLATE SET | CONJUNTO PLATINA ENVOLVENTE | ENSEMBLE PLATINE CUVE |
| 8 | 320382 | PRESSURE TRANSMITT INTAKE BODY | CUERPO TOMA PRESOSTATO | CORPS PRISE PRESSOSTAT |
| 9 | 428482 | OUTER | ENVOLVENTE | CUVE |
| 10 | 428441 | OUTER DRUM FRONT PANEL | FRONTAL ENVOLVENTE | FRONTAL CUVE |
| 11 | 340638 | HOUSING OUTER-DRUM FRONT | JUNTA FRONTAL ENVOLVENTE | JOINT FRONTAL CUVE |
| 12 | 422329 | HANDRAIL 43X25X8 | PASAMANO 43X25X8 | PASSEMAIN 43X25X8 |
| 13 | 320036 | PRESSURE T.BODY SHEATH-LODGING | PASAMUROS CUERPO PRESOSTATO | LOGEMENT CORPS PRESSOSTAT |
| 14 | 338863 | VAPOR OUTLET SHEATH-LODGING | PASAMUROS DESVAPORIZADOR | LOGEMENT SORTIE CONDENSATS |
| 15 | 256149 | SENSOR SHEATH LODGING | PASAMUROS SENSOR | LOGEMENT SENSEUR |
| 16 | 341073 | OUTER DRUM PIECE | POSICIONADOR ENVOLVENTE | PIECE CUVE |
| 17 | 338871 | VAPOR OUTLET RACCORD | RACOR DESVAPORIZADOR | RACCORD SORTIE CONDENSATS |
| 18 | 193862 | NTC RESISTANCE 2381 640 90042 | RESISTENCIA NTC 2381 640 90042 | RESISTANCE NTC 2381 640 90042 |
| 19 | 431536 | LOCK INSTALLATION FIXING-PIECE | SUJECION INSTALACION CIERRE | FIXATION INST.FERMETURE |
| 20 | 146266 | BICR.HEX SCREW DIN933-8 M-4X15 | TOR.EX.DIN933-4.8 B.TRI.M 4X15 | VIS HEX BICR.DIN933-8.8 M-4X15 |
| 21 | 186528 | SCREW HEX 8G DIN933 M10X 50 | TOR.EX.DIN933-8.8 B.TRI.M10X50 | VIS HEX 8G DIN933 M10X 50 |
| 22 | 146464 | BICR.HEX SCREW DIN933-8 M8X100 | TOR.EX.DIN933-8.8 B.TRI.M8X100 | VIS HEX BICR.DIN933-8 M 8X100 |
| 23 | 428672 | PRESSURE TRANSMITTER HOSE | TUBO TRANSMISOR PRESION | TUYAU PRESSOSTAT |
| 24 | 132043 | SELFBLOCKING NUT DIN985 M 4 | TUER.AUTOBL.DIN985-8 B.TRI.M 4 | ECROU AUTOBLOCANT DIN985 M 4 |
| 25 | 176834 | SELFBLOCKING NUT DIN985 M-6 | TUER.AUTOBL.DIN985-8 B.TRI.M6 | ECROU AUTOBLOCANT DIN985 M-6 |
| 26 | 164285 | SELFBLOCKING NUT DIN985 M-8 | TUER.AUTOBL.DIN985-8 B.TRI.M8 | ECROU AUTOBLOCANT DIN985 M-8 |
| 27 | 150649 | SELFBLOCKING NUT DIN 985 M-10 | TUER.AUTOB.DIN985-8 B.TRI.M10 | ECROU AUTOBLOCANT DIN 985 M-10 |

info@zipnasklade.ru
8(800)500-69-51

MS-613
Pag. 03

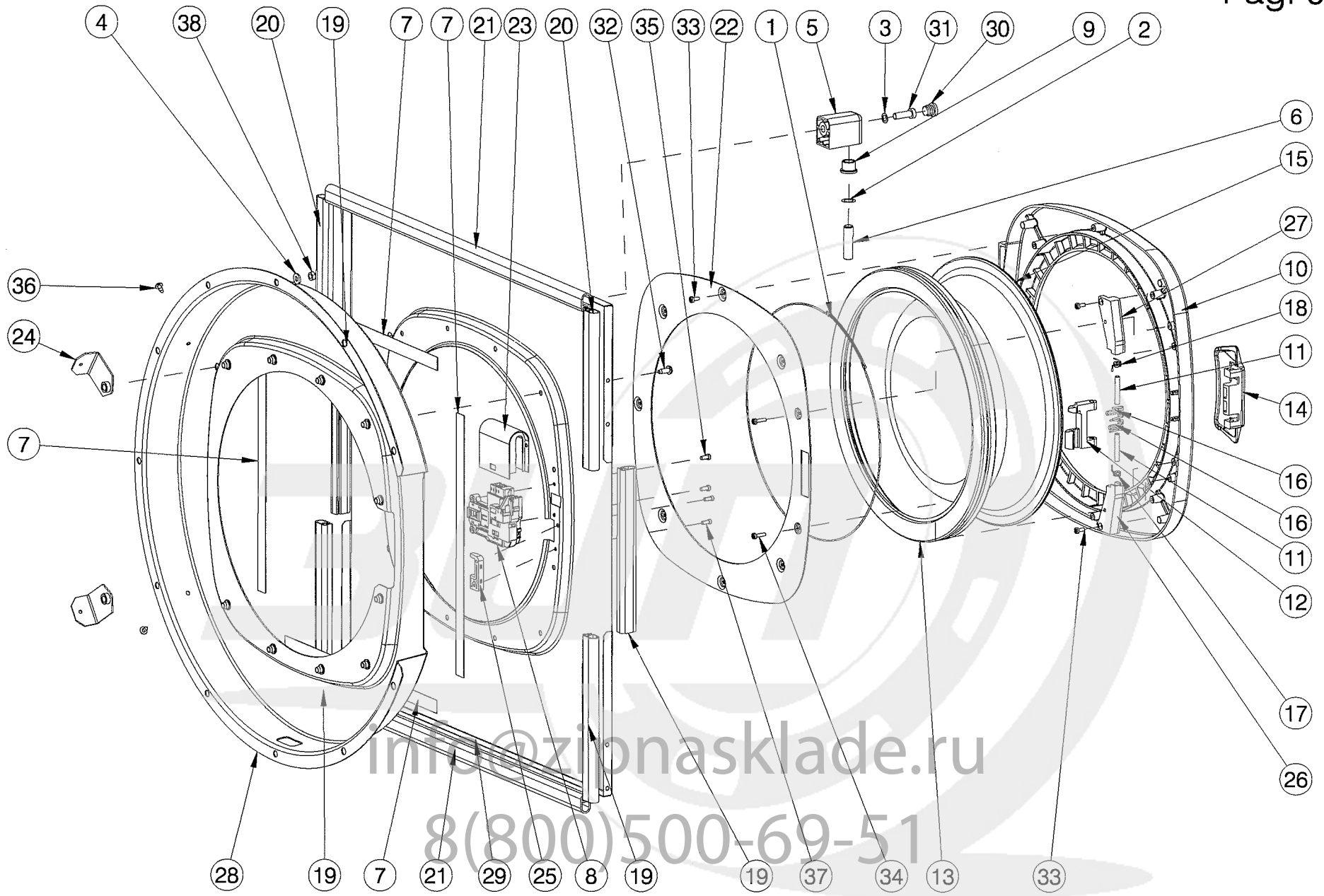


info@zipnasklade.ru
8(800)500-69-51

| Nº | REF | DENOMINATION | DENOMINACIÓN | DENOMINATION |
|---|---|---|---|---|
| 1 | 343137 | WASHER D322XD1,5 SPRING | ABRAZ.ALAMBRE D318XD1,5 MUELLE | RONDELLE D322XD1,5 RESSORT |
| 2 | 184200 | ADJ. WASHER PS12X18X0,2 | ARAN.AJUSTE PS12X18X0,2 DIN988 | RONDELLE REGLAGE PS12X18X0,2 |
| 3 | 318253 | WASHER 8 | ARAN.ESPECIAL TORN.DIN912 M 8 | RONDELLE 8 |
| 4 | 432872 | WASHER 14X6.4X2 | ARANDELA 14X6.4X2 INOX | RONDELLE 14X6.4X2 |
| 5 | 430777 | HINGE | BISAGRA | CHARNIERE |
| 6 | 261156 | DOOR BOLT | BULON ESCOTILLA | BOULON HUBLOT |
| 7 | 423467 | ANTI-VIBRATION TGRIM | BURLETE ANTIVIBRANTE | GARNITURE ANTI-VIBRATION |
| 8 | 333302 | LOCKING BITRON BP P/5 DL-S1 | CIERRE BITRON BP P/5 DL-S1 * | FERMETURE BITRON BP P/5 DL-S1 |
| 9 | 128827 | SELFOIL SLEEVE B11B12-17-15/22 | COJ. SELFOIL B11B12-17-15/22-3 | FRETTE SELFOIL B11B12-17-15/22 |
| 10 | 427559 | DOOR BODY | CUERPO ESCOTILLA | CORPS HUBLOT |
| 11 | 427088 | HANDLE SHAFT | EJE MANETA | AXE POIGNEE |
| 12 | 339614 | LOCK HOOK | GANCHO CIERRE | CROCHET FERMETURE |
| 13 | 343129 | DOOR GASKET | JUNTA ESCOTILLA 60SHA | JOINT HUBLOT |
| | 359810 | JUNTA ESCOTILLA 70SHA (SPARE PARTS ONLY) | JUNTA ESCOTILLA 70SHA (SOLO RECAMBIOS) | JUNTA ESCOTILLA 70SHA (SEULEMENT PIÈCES DÉTACHÉES) |
| 14 | 343855 | LOCK HANDLE | MANETA CIERRE | POIGNEE FERMETURE |
| 15 | 340547 | SPYHOLE | MIRILLA | VITRE |
| 16 | 350462 | HOOK SPRING | MUELLE GANCHO | RESSORT CROCHET |
| 17 | 339978 | HANDLE SPRING | MUELLE MANETA | RESSORT POIGNEE |
| 18 | 339986 | HANDLE SPRING | MUELLE MANETA | RESSORT POIGNEE |
| 19 | 431460 | SHORT FRONT COVER PROFILE | PERFIL TAPA FRONTAL CORTO | PROFILE COUVERC.FRONTALE COURT |
| 20 | 432757 | SHORT FRONT COVERT PROFILE | PERFIL TAPA FRONTAL CORTO | PROFILE COUVERC.FRONTALE COURT |
| 21 | 431478 | LONG FRONT COVERT PROFILE | PERFIL TAPA FRONTAL LARGO | PROFILE COUVERC.FRONTALE LONG |
| 22 | 340554 | GLASS-HOLDER | PORTA-MIRILLA | PORTE-VITRE |
| 23 | 333070 | LOCKING PROTECTION | PROTECCION CIERRE | PROTECTION FERMETURE |
| 24 | 427492 | DOOR BRACKET REINFORT | REFUERZO SOPORTE PUERTA | RENFORT SUPPORT HUBLOT |
| 25 | 430843 | FRONT COVER REINFORT | REFUERZO TAPA FRONTAL | RENFORT COUVERCLE FRONTALE |
| 26 | 409086 | HANDLE BRACKET | SOPORTE MANETA | SUPPORT HUBLOT |
| 27 | 409094 | HANDLE BRACKET | SOPORTE MANETA | SUPPORT POIGNEE |

info@zipnasklade.ru
8(800)500-69-51

| Nº | REF | DENOMINATION | DENOMINACIÓN | DENOMINATION |
|---|---|---|---|---|
| 28 | 428383 | DOOR BRACKET | SOPORTE PUERTA | SUPPORT HUBLOT |
| 29 | 427567 | FRONT COVER | TAPA FRONTAL | COUVERCLE FRONTAL |
| 30 | 322974 | PLUG | TAPON KAPSTO GPN320GL18 | BOUCHON |
| 31 | 316695 | ALLEN SCREW DIN7984-8 M8X 25 | TOR.ALLDIN7984-8.8B.TRI.M 8X25 | VIS ALLEN DIN7984-8.8 B.M8X 25 |
| 32 | 333294 | SCREW T25 M6X15 | TOR.ALOM.T25 AR.18ESTR.M 6X15* | VIS T25 M6X15 |
| 33 | 326116 | SCREW SF PLUS M4X10 | TOR.CELO 410TT85T 4X10 INOX | VIS SF PLUS M4X10 |
| 34 | 352724 | SCREW CELO 416TT85T 4X15 INOX | TOR.CELO 416TT85T 4X16 INOX | VIS CELO 416TT85T 4X16 INOX |
| 35 | 322990 | SCREW DELTA PT 45X10 WN5452 | TOR.CELO 4510RFAT INOX 4.5X10 | VIS DELTA PT 45X10 WN5452 |
| 36 | 322750 | SCREW FDS SF-M5X12PKS | TOR.AUTO-ROSC.TORX.ESTR.M5X12* | VIS.FDS SF-M5X12PKS |
| 37 | 438903 | LOCK SCREW 4,5X 10 | TORNILLO CIERRE 4,5X10 | VIS FERMETURE 4,5X10 |
| 38 | 176834 | SELFBLOCKING NUT DIN985 M-6 | TUER.AUTOBL.DIN985-8 B.TRI.M6 | ECROU AUTOBLOCANT DIN985 M-6 |
| | | WITHOUT ILLUSTRATION | SIN ILUSTRACION | SANS ILLUSTRATION |
| | 431189 | JOINT ADJUSTING RING | ARO AJUSTE JUNTA | BAGUE REGLAGE JOINT |

info@zipnasklade.ru
8(800)500-69-51

info@zipnasklade.ru
8(800)500-69-51

# MS-613
Pag. 04

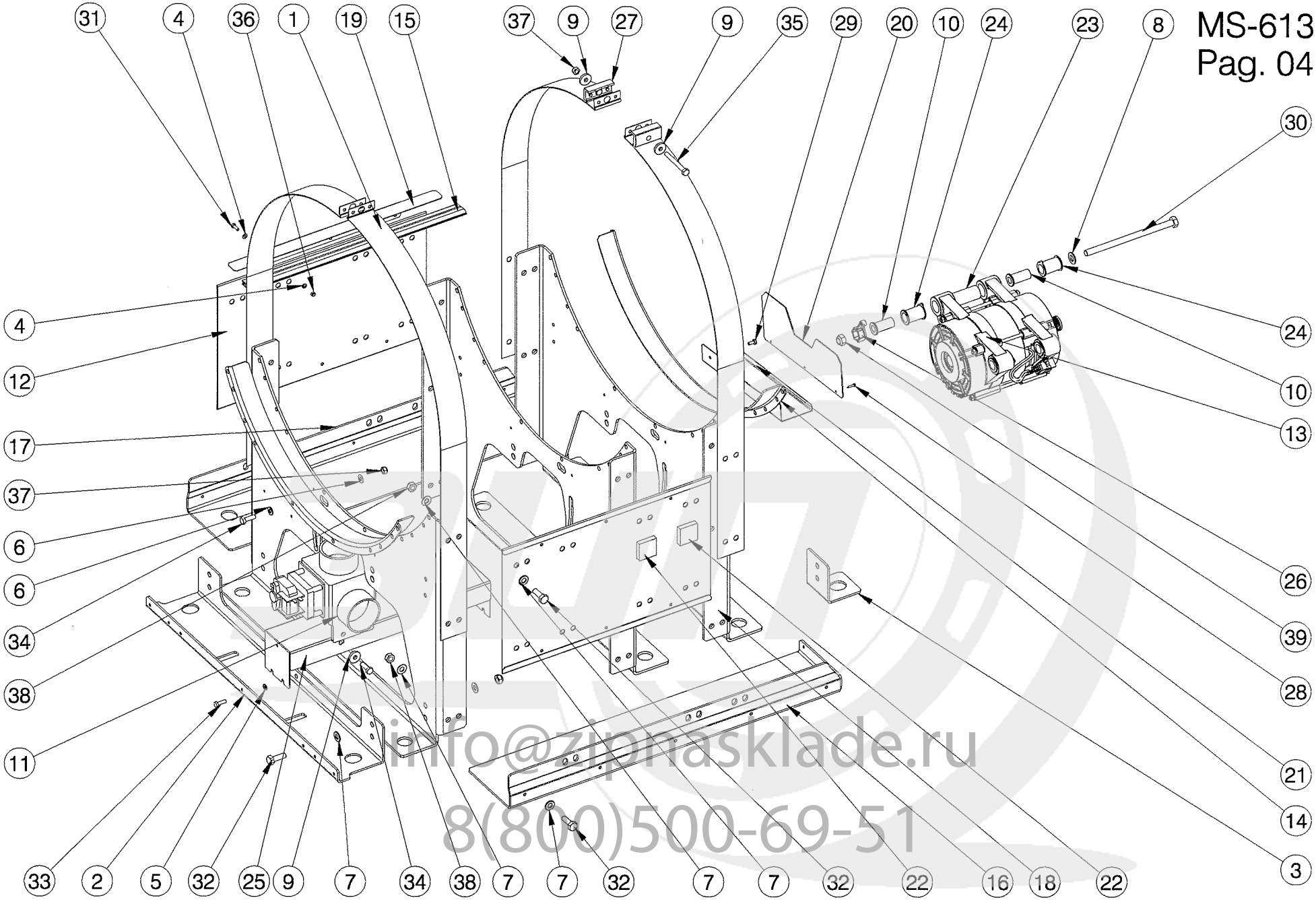


info@zipnasklade.ru
8(800)500-69-51

| Nº | REF | DENOMINATION | DENOMINACIÓN | DENOMINATION |
|---|---|---|---|---|
| 1 | 427807 | OUTER-DRUM CLAMP | ABRAZADERA ENVOLVENTE | BRIDE CUVE |
| 2 | 431718 | FRONT RENFORT ANGLE | ANGULO REFUERZO ANTERIOR | ANGLE RENFORT AVANT |
| 3 | 427609 | REAR RENFORT ANGLE | ANGULO REFUERZO POSTERIOR | ANGLE RENFORT ARRIERE |
| 4 | 149534 | BICR.WASHER B DIN125-ST 5,3 | ARAN.B DIN125-ST BICR. 5,3 | RONDELLE B BICR.DIN125-ST 5,3 |
| 5 | 149526 | BICR.WASHER B DIN125-ST 6,4 | ARAN.B DIN125-ST B.TRI. 6,4 | RONDELLE B DIN125-ST BICR.6,4 |
| 6 | 149518 | BICR.WASHER B DIN125-ST 8,4 | ARAN.B DIN125-ST B.TRI. 8,4 | RONDELLE.B DIN125-ST BICR.8,4 |
| 7 | 149500 | BICR.WASHER B DIN125-ST 10,5 | ARAN.B DIN125-ST B.TRI.10,5 | RONDELLE B DIN125-ST BICR.10,5 |
| 8 | 149419 | BICR.WASHER B DIN125-ST 13 | ARAN.B DIN125-ST B.TRI.13 | RONDELLE B DIN125-ST BICR.13 |
| 9 | 261529 | WASHER 25X8,5X4 | ARANDELA 25X8.5X4 TRIVALEN. | RONDELLE 25X8,5X4 |
| 10 | 423103 | MOTOR SLEEVE | CASQUILLO MOTOR | FRETTE MOTEUR |
| 11 | 338129 | DRAIN (OPEN) MBD-3RA | DESAGÜE (ABIERTO) MBD-3RA | VIDANGE (OUVERT) MBD-3RA |
| 12 | 428300 | CHASSIS SIDE PANEL | LATERAL CHASIS | LATERAL CHASSIS |
| 13 | 428896 | MOTOR MT 90-70/4 | MOTOR MT 90-70/4 | MOTEUR MT 90-70/4 |
| | 501270 | BEARING 6306-2Z/C3 (END PULLEY) | RODAMIENTO 6306-2Z/C3 (EXTREMO POLEA) | ROULEMENT 6306-2Z/C3 (FINAL POULIE) |
| | 501577 | BEARING 6205-2Z/C3 (OPPOSITE END PULLEY) | RODAMIENTO 6205-2Z/C3 (EXTREMO OPUESTO POLEA) | ROULEMENT 6205-2Z/C3 (FINAL OPPOSÉ POULIE) |
| 14 | 340729 | OUTER-DRUM SUPPORT PROFILE | PERFIL APOYO ENVOLVENTE | PROFILE APPUI CUVE |
| 15 | 433102 | SIDE PROFILE | PERFIL LATERAL | PROFILE LATERALE |
| 16 | 431734 | LANE RIGHT PROFILE | PERFIL LONGITUDINAL DERECHO | PROFILE LONGITUDINALE DROIT |
| 17 | 431759 | LANE LEFT PROFILE | PERFIL LONGITUDINAL IZQUIERDO | PROFILE LONGITUDINALE GAUCHE |
| 18 | 428334 | CHASSIS PLATE | PLACA CHASIS | PLAQUE CHASSIS |
| 19 | 433094 | SIDE PROFILE-SUPPORT | PORTA-PERFIL LATERAL | PORTE-PROFILE LATERAL |
| 20 | 432674 | WIRE PROTECTION | PROTECCION CABLES | PROTECTION CABLES |
| 21 | 431163 | MOTOR PROTECTION | PROTECCION MOTOR | PROTECTION MOTEUR |
| 22 | 431205 | PRESSOSTAT HOSE PROTECTION | PROTECCION TUBO PRESOSTATO | PROTECTION TUBE PRESSOSTAT |
| 23 | 428599 | MOTOR SEPARATOT | SEPARADOR MOTOR | SEPARATION MOTEUR |
| 24 | 432203 | MOTOR SILENTBLOCK | SILENTBLOC MOTOR | SILENTBLOCK MOTEUR |
| 25 | 431908 | DRAIN BRACKET | SOPORTE DESAGÜE | SUPPORT VIDANGE |

info@zipnasklade.ru
8(800)500-69-51

| Nº | REF | DENOMINATION | DENOMINACIÓN | DENOMINATION |
|---|---|---|---|---|
| 26 | 338095 | MOTOR NUT BRACKET | SOPORTE TUERCA MOTOR | SUPPORT ECROU MOTEUR |
| 27 | 338053 | CLAMP TEIGHTENER | TENSOR ABRAZADERA | TENDEUR BRIDE |
| 28 | 332627 | SCREW REF. TT85 T M3 X16 | TOR. REF. TT85 T M3 X16 | VIS REF.TT85 T M3 X16 |
| 29 | 343434 | SCREW 512TTAET M5X12 | TOR.CELO 512TTAET M5X12 | VIS 512TTAET M5X12 |
| 30 | 340893 | BIC.HEX SCREW DIN931-8.8 | TOR.EX.DIN931-8.8B.TRI.M12X200 | VIS HEX BICR.DIN931-8.8 |
| 31 | 146282 | BICR.HEX SCREW DIN933-8 M 5X15 | TOR.EX.DIN933-8.8 B.TRI.M 5X15 | VIS HEX BICR.DIN933-8.8 M 5X15 |
| 32 | 146506 | 8G HEX.SCREW DIN 933 M-10X30 | TOR.EX.DIN933-8.8 B.TRI.M10X30 | VIS HEX. 8G DIN 933 M-10X30 |
| 33 | 146316 | BICR.HEX SCREW DIN933-8 M-6X20 | TOR.EX.DIN933-8.8 B.TRI.M 6X20 | VIX HEX BICR.DIN933-8.8 M-6X20 |
| 34 | 192849 | BIC.HEX SCREW DIN933-8 M-8X25 | TOR.EX.DIN933-8.8 B.TRI.M 8X25 | VIS HEX.DIN933-8,8 BICR.M-8X25 |
| 35 | 193391 | HEX SCREW 8G DIN933 M- 8X 70 | TOR.EX.DIN933-8.8 B.TRI.M 8X70 | VIS HEX.8G DIN933 M- 8X 70 |
| 36 | 176826 | SELF-BLOCKING NUT DIN 985 M-5 | TUER.AUTOBL.DIN985-8 B.TRI.M5 | ECROU AUTOBLOCANT DIN 985 M-5 |
| 37 | 164285 | SELFBLOCKING NUT DIN985 M-8 | TUER.AUTOBL.DIN985-8 B.TRI.M8 | ECROU AUTOBLOCANT DIN985 M-8 |
| 38 | 150649 | SELFBLOCKING NUT DIN 985 M-10 | TUER.AUTOB.DIN985-8 B.TRI.M10 | ECROU AUTOBLOCANT DIN 985 M-10 |
| 39 | 150656 | SELFBLOCKING NUT DIN985 M-12 | TUER.AUTOB.DIN985-8 B.TRI.M12 | ECROU AUTOBLOCANT DIN985 M-12 |

info@zipnasklade.ru
8(800)500-69-51

info@zipnasklade.ru
8(800)500-69-51

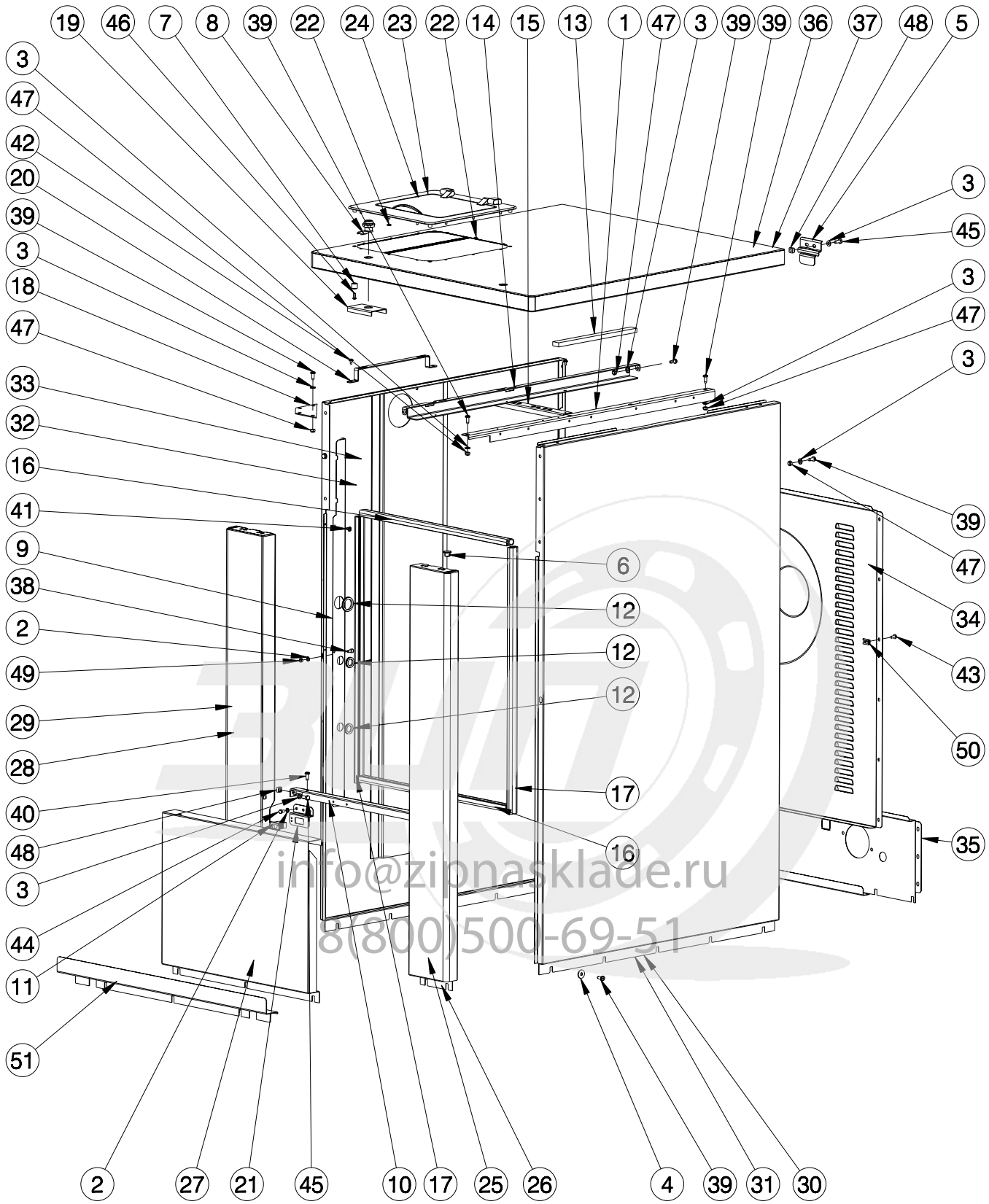


info@zipnasklade.ru
8(800)500-69-51

| Nº | REF | DENOMINATION | DENOMINACIÓN | DENOMINATION |
|---|---|---|---|---|
| 1 | 428011 | LANE ANGLE | ANGULO LONGITUDINAL | ANGLE LONGITUDINAL |
| 2 | 149534 | BICR.WASHER B DIN125-ST 5,3 | ARAN.B DIN125-ST BICR. 5,3 | RONDELLE B BICR.DIN125-ST 5,3 |
| 3 | 149526 | BICR.WASHER B DIN125-ST 6,4 | ARAN.B DIN125-ST B.TRI. 6,4 | RONDELLE B DIN125-ST BICR.6,4 |
| 4 | 153205 | WASHER 20X7X2 | ARANDELA 20X7X2 TRIVALEN. | RONDELLE 20X7X2 |
| 5 | 431593 | TOP COVER HINGE | BISAGRA TAPA SUPERIOR | CHARNIERE COUVERCLE SUPERIEUR |
| 6 | 323717 | END PIECE | CANTONERA | ARRET |
| 7 | 444398 | FRAME FIXATION SLEEVE | CASQUILLO FIJACION MARCO | FRETTE FIXATION CADRE |
| 8 | 196915 | LOCK RE.20.00.02.05 | CERRADURA REF.20.00.02.05 * | FERMETURE REF.20.00.02.05 |
| | 196923 | LOCK KEY RE.10.41.213 | LLAVE REF.10.41.213 COMB.T-205 | CLE FERMETURE REF.10.41.213 |
| 9 | 432542 | HARNESS CONDUCTION | CONDUCCION CABLEADO | CONDUITE CABLAGE |
| 10 | 428532 | FRONT COVER FIXING-PIECE | FIJACION TAPA FRONTAL | FIXATION CUOVERCLE FRONTAL |
| 11 | 323048 | MINISWITCH CHERRY E69-60C (EM030) | MINIRRUPTOR CHERRY E69-60C (EM030) | MINIRRUPTEUR CHERRY E69-60C (EM030) |
| 12 | 341438 | MOLDADURA MGS-1-01 | MOLDURA MGS-1-01 | MOLDADURA MGS-1-01 |
| 13 | 439000 | COVER SHOCK-ABSORBER PROFILE | PERFIL AMORTIGUADOR TAPA | PROFIL AMORTISSEUR COUVERCLE |
| 14 | 428003 | SOAP DISP.HOLDING DOWN PROFILE | PERFIL ANCLAJE DOSIFICADOR | PROFILE SCELLEMENT BAD A PROD. |
| 15 | 423327 | HOSE FIXING PROFILE | PERFIL FIJACION TUBOS | PROFILE FIXATION TUBES |
| 16 | 428573 | LOWER COVER AND PANEL PROFILE | PERFIL PANEL Y TAPA INFERIOR | PROF.PANNEAU ET COUVERCLE INF. |
| 17 | 428177 | FRONT COVER PROFILE | PERFIL TAPAS FRONTALES | PROFILE COUVERCLE FRONTALE |
| 18 | 406298 | PANEL FIXING RENFORT | REFUERZO FIJACION TAPAS | REFORT FIXATION COUVERCLES |
| 19 | 242115 | UPPER COVER RENFORT | REFUERZO TAPA SUPERIOR | REFORT COUVERCLE SUPERIEUR |
| 20 | 431742 | SOAP DISPENSER BRACKET | SOPORTE DOSIFICADOR | SUPPORT BAC A PRODUITS |
| 21 | 423129 | MICROSWITCH BRACKET | SOPORTE MICRORRUPTOR | SUPPORT MICRORRUPTEUR |
| 22 | 193540 | MIKALOR QUICK FIXING 211038-8 | SUJEC.RAPIDA MIKALOR 211038-8 | FIXATION RAPIDE MIKALOR |
| 23 | 343095 | CANCELLED | ANULADO | ANNULE |
| | 517508 | TAPA DOSIFICADOR SUP. (FOR TOP DISPENSER) (MS-613) | TAPA DOSIFICADOR SUP. (PARA DOSIFICADOR SUPERIOR) (MS-613) | TAPA DOSIFICADOR SUP. (POUR BAC A PRODUITS SUPERIEUR (MS-613) |

info@zipnasklade.ru
8(800)500-69-51

| Nº | REF | DENOMINATION | DENOMINACIÓN | DENOMINATION |
|---|---|---|---|---|
| 24 | 517136 | TAPA DOSIFICADOR SUP.CC-USA (FOR TOP DISPENSER) (EM030) | TAPA DOSIFICADOR SUP.CC-USA (PARA DOSIFICADOR SUPERIOR) (EM030) | TAPA DOSIFICADOR SUP.CC-USA (POUR BAC A PRODUITS SUPERIEUR (EM030) |
| 25 | 427906 | RIGHT FRONT COVER (INOX) | TAPA FRONTAL DERECHA (INOX) | COUVERCLE FRONTAL DROIT (INOX) |
| 27 | 428607 | LOWER FRONT COVER | TAPA FRONTAL INFERIOR | COUVERCLE FRONTAL INFERIEUR |
| 28 | 427898 | LEFT FRONT COVER (INOX) | TAPA FRONTAL IZQUIERDA (INOX) | COUVERCLE FRONTAL GAUCHE (INOX) |
| 30 | 428037 | RIGHT SIDE PANEL (INOX) | TAPA LATERAL DERECHA (INOX) | COUVERCLE LATERAL DROIT (INOX) |
| 32 | 428060 | LEFT SIDE PANEL (INOX) | TAPA LATERAL IZQUIERDA (INOX) | COUVERCLE LATERAL GAUCHE (INOX) |
| 34 | 428615 | REAR COVER | TAPA POSTERIOR | COUVERCLE ARRIERE |
| 35 | 428623 | LOWER REAR COVER | TAPA POSTERIOR INFERIOR | COUVERCLE ARRIERE INFERIEUR |
| 36 | 428540 | UPPER COVER (INOX) | TAPA SUPERIOR (INOX) | COUVERCLE SUPERIEUR (INOX) |
| 38 | 144261 | ALLEN SCREW DIN 912 M-5X10 | TOR.ALLDIN912-8.8 B.TRI.M 5X10 | VIS ALLEN DIN 912 M-5X10 |
| 39 | 333625 | SCREW T25 M6X15 | TOR.ALOM.T25 A18EST.M6X15 TRI. | VIS T25 M6X15 |
| 40 | 333294 | SCREW T25 M6X15 | TOR.ALOM.T25 AR.18ESTR.M 6X15* | VIS T25 M6X15 |
| 41 | 322750 | SCREW FDS SF-M5X12PKS | TOR.AUTO-ROSC.TORX.ESTR.M5X12* | VIS.FDS SF-M5X12PKS |
| 42 | 183400 | CYL.PLATE SCREW ST-4 20 C/AL | TOR.CHAPA ST-4 20 C/AL.T25 * | VIS PLAQUE CYL.ST-4 20 C/AL |
| 43 | 149153 | PLATE SCREW ST-4 80 C/AL.T25 | TOR.CHAPA ST-4 80 C/AL.T25 * | VIS PLAQUE ST-4 80 C/AL.T25 |
| 44 | 146274 | BICR.HEX SCREW DIN933-8 M-5X10 (EM030) | TOR.EX.DIN933-8.8 B.TRI.M 5X10 (EM030) | VIS HEX.BICR.DIN933-8.8 M-5X10 (EM030) |
| 45 | 146233 | BICR.HEX SCREW DIN933-8 M6X15 | TOR.EX.DIN933-8.8 B.TRI.M 6X15 | VIS HEX DIN933-8.8 BICR.M6X15 |
| 46 | 326660 | SCREW PT K40X12 WN1451-TORX | TOR.CELO 412RFX87T INOXA2 4X12 | VIS PT K40X12 WN1451-TORX |
| 47 | 176834 | SELFBLOCKING NUT DIN985 M-6 | TUER.AUTOBL.DIN985-8 B.TRI.M6 | ECROU AUTOBLOCANT DIN985 M-6 |
| 48 | 165019 | CAGED NUT M-6 0,5-1,5 | TUER.ENJ.M6 0,5-1,5 R.310007-9 | ECROU PRESIONER M-6 0,5-1,5 |
| 49 | 150177 | BICR HEX NUT DIN934-8 M5 | TUER.EX.DIN934-8 B.TRI.M 5 | ECROU HEX DIN934-8 BIC.M5 |
| 50 | 135228 | NUT NUL 506-2A REF. 213048-1 | TUERCA SEG.NUL 506-2B 213048-1 | ECROU NUL 506-2A REF. 213048-1 |
| 51 | 430355 | SOCKET | ZOCALO | SOCLE |

info@zipnasklade.ru
8(800)500-69-51

| Nº | REF | DENOMINATION | DENOMINACIÓN | DENOMINATION |
|---|---|---|---|---|
| | | WITHOUT ILLUSTRATION | SIN ILUSTRACION | SANS ILLUSTRATION |
| | 793547 | KIT SUP. DOS.COVER .CC- USA (EM030) | KIT TAPA DOSIFICADOR SUP. CC-USA (EM030) | KIT.SUP.DOS.COUVERCLE.CC -USA (EM030) |
| | 793927 | KIT SUP. DOS.COVER .(NO CC-USA) (MS-613) | KIT TAPA DOSIFICADOR SUP. (NO CC-USA) (MS-613) | KIT.SUP.DOS.COUVERCLE.(NO CC-USA) (MS-613) |

info@zipnasklade.ru
8(800)500-69-51

| Nº | REF | DENOMINATION | DENOMINACIÓN | DENOMINATION |
|---|---|---|---|---|
| | | FROM MACHINE Nr: | A PARTIR DE LA MAQUINA No : | A PARTIR DE LA MACHINE NR: |
| | | 2.030.094<br>1.380.001 | 2.030.094<br>1.380.001<br>.<br>. | 2.030.094<br>1.380.001 |
| 36 | 428888 | UPPER COVER<br>(INOX) | TAPA SUPERIOR<br>(INOX) | COUVERCLE SUPERIEUR<br>(INOX) |

info@zipnasklade.ru
8(800)500-69-51

| Nº | REF | DENOMINATION | DENOMINACIÓN | DENOMINATION |
|---|---|---|---|---|
| | | FROM MACHINE Nr: | A PARTIR DE LA MAQUINA No : | A PARTIR DE LA MACHINE NR: |
| | | 2.030.299<br>1.380.023 | 2.030.299<br>1.380.023 | 2.030.299<br>1.380.023 |
| 26 | 445130 | TAPA FRONTAL DERECHA<br>PRE-COATED | TAPA FRONTAL DERECHA<br>PRE-COATED | TAPA FRONTAL DERECHA<br>PRE-COATED |
| 29 | 445122 | TAPA FRONTAL IZQUIERDA<br>PRE-COATED | TAPA FRONTAL IZQUIERDA<br>PRE-COATED | TAPA FRONTAL IZQUIERDA<br>PRE-COATED |
| 31 | 444968 | TAPA LATERAL DERECHA<br>PRE-COATED | TAPA LATERAL DERECHA<br>PRE-COATED | TAPA LATERAL DERECHA<br>PRE-COATED |
| | 428078 | CANCELLED | ANULADO | ANNULE |
| 33 | 444943 | TAPA LATERAL IZQUIERDA<br>PRE-COATED | TAPA LATERAL IZQUIERDA<br>PRE-COATED | TAPA LATERAL IZQUIERDA<br>PRE-COATED |
| | 428086 | CANCELLED | ANULADO | ANNULE |
| 37 | 444901 | TAPA SUPERIOR<br>PRE-COATED | TAPA SUPERIOR<br>PRE-COATED | TAPA SUPERIOR<br>PRE-COATED |

info@zipnasklade.ru
8(800)500-69-51

# MS-613 LC/CC
Pag. 06

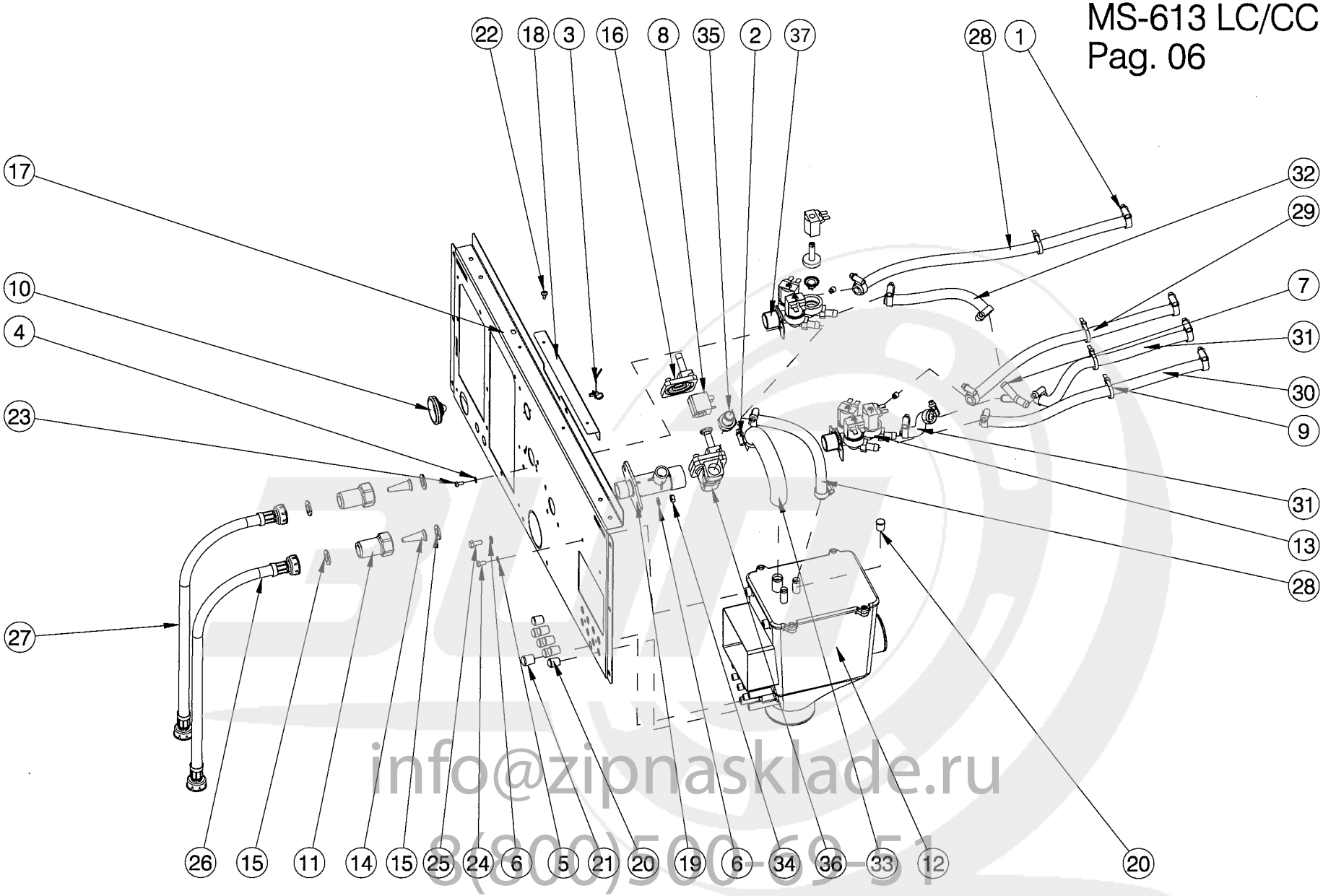


info@zipnasklade.ru
8(800)500-69-51

| Nº | REF | DENOMINATION | DENOMINACIÓN | DENOMINATION |
|---|---|---|---|---|
| 1 | 155150 | CLAMP 8-16 | ABRAZADERA 8- 16 * | BRIDE 8-16 |
| 2 | 156109 | CLAMP 16-27 | ABRAZADERA 16- 27 * | BRIDE 16-27 |
| 3 | 326132 | CLAMP ABA-036-48-0152-B | ABRAZADERA ABA-036-48-0152-B | BRIDE ABA-036-48-0152-B |
| 4 | 149476 | BICR.WASHER B DIN125-ST 4,3 | ARAN.B DIN125-ST B.TRI. 4,3 | RONDELLE B DIN125-ST BICR.4,3 |
| 5 | 149534 | BICR.WASHER B DIN125-ST 5,3 | ARAN.B DIN125-ST BICR. 5,3 | RONDELLE B BICR.DIN125-ST 5,3 |
| 6 | 149526 | BICR.WASHER B DIN125-ST 6,4 | ARAN.B DIN125-ST B.TRI. 6,4 | RONDELLE B DIN125-ST BICR.6,4 |
| 7 | 152165 | BRANCH | BIFURCACION | BIFURCATION |
| 8 | 333716 | COIL AB 5W 12V CC 042N0806 | BOBINA AB 5W 12V CC 042N0806 | BOBINE AB 5W 12V CC 042N0806 |
| 9 | 140525 | CLAMP 2244-0 | BRIDA UNEX 2244-0 * | BRIDE 2244-0 |
| 10 | 139683 | CONE ECPC-6 | CONO HIMEL ECPC-6 | CONE ECPC-6 |
| 11 | 315317 | FILTER BODY | CUERPO FILTRO | CORPS FILTRE |
| 12 | 339689 | DISTRIBUTOR | DISTRIBUIDOR | DISTRIBUTEUR |
| 13 | 422766 | 3-TRACK ELECTROVALVE | ELECTROVALVULA TRES VIAS | ELECTROVANNE TROIS VOIES |
| | 156265 | REGULATOR 3 L/MIN (BLACK) | REGULADOR DE 3 L/MIN. (NEGRO) | REGULATEUR 3 L/MIN (NOIR) |
| | 300194 | YELLOW CASE 30053 | ESTUCHE AMARILLO 30053 | BOITE JAUNE 30053 |
| | 300202 | INTEGRAL GUIDE-MEMBRANE 30696 | MEMBRANA-GUIA INTEGRAL 30696 * | MEMBRANE-GUIDE INTEGRALE 30696 |
| | 332296 | COIL 255043000000 12VCC | BOBINA 255043000000 12VCC | BOBINE 255043000000 12VCC |
| 14 | 315614 | CONICAL FILTER | FILTRO CONICO REF.4008-2-1 * | FILTRE CONIQUE |
| 15 | 114348 | GASKET D24XD13,5X2 | JUNTAMIFLEX D24X13, 5X2 | JOINT D24XD13,5X2 |
| 16 | 341685 | SPARE-PARTS KIT EV220A 12-14B | KIT REPUES.EV220A 12-14B * | KIT RECHANGES EV220A 12-14B |
| 17 | 428565 | REAR PANEL | PANEL POSTERIOR | PANNEAU POSTERIEUR |
| 18 | 431767 | INSTALLATION FIXING PROFILE | PERFIL FIJACION INSTALACION | PROFILE FIXATION INSTALLATION |
| 19 | 333682 | ELECTROVALVE BRACKET | SOPORTE ELECTROVALVULAS | SUPPORT ELECTROVANNES |
| 20 | 156679 | CONICAL END-PIECE R-16 D10 | TOPE CONICO REPRIMSA R-16 D10 | BOUCHON CONIQUE R-16 D10 |
| 21 | 357624 | CONICAL END-PECE R-16 D12 | TOPE CONICO REPRIMSA R-16 D12 | BOUCHON CONIQUE R-16 D12 |
| 22 | 322750 | SCREW FDS SF-M5X12PKS | TOR.AUTO-ROSC.TORX.ESTR.M5X12* | VIS.FDS SF-M5X12PKS |
| 23 | 146258 | BIC.HEX SCREW DIN933-4.8 M4X10 | TOR.EX.DIN933-4.8 B.TRI.M 4X10 | VIS HEX DIN933-4.8 BICR.M 4X10 |
| 24 | 146274 | BICR.HEX SCREW DIN933-8 M-5X10 | TOR.EX.DIN933-8.8 B.TRI.M 5X10 | VIS HEX.BICR.DIN933-8.8 M-5X10 |

info@zipnasklade.ru
8(800)500-69-51

| Nº | REF | DENOMINATION | DENOMINACIÓN | DENOMINATION |
|---|---|---|---|---|
| 25 | 146233 | BICR.HEX SCREW DIN933-8 M6X15 | TOR.EX.DIN933-8.8 B.TRI.M 6X15 | VIS HEX DIN933-8.8 BICR.M6X15 |
| 26 | 326587 | WATER INLET AC DI12,5 L1,5M | TUBO ENTRADA AC DI12,5 L1,5M * | FLEXIBLE ENTRÉE AC DI12,5 L1,5 |
| 27 | 326579 | WATER INLET AF DI12,5 L1,5M | TUBO ENTRADA AF DI12,5 L1,5M * | FLEXIBLE ENTRÉE AF DI12,5 L,5M |
| 28 | 411363 | WATER INLET HOSE | TUBO ENTRADA AGUA | TUBE ENTREE EAU |
| 29 | 411371 | WATER INLET HOSE | TUBO ENTRADA AGUA | TUBE ENTREE EAU |
| 30 | 427195 | WATER INLET HOSE | TUBO ENTRADA AGUA | TUBE ENTREE EAU |
| 31 | 432641 | WATER INLET HOSE | TUBO ENTRADA AGUA | TUBE ENTREE EAU |
| 32 | 432658 | WATER INLET HOSE | TUBO ENTRADA AGUA | TUBE ENTREE EAU |
| 33 | 432666 | WATER INLET HOSE | TUBO ENTRADA AGUA | TUBE ENTREE EAU |
| 34 | 150227 | BICR HEX NUT DIN934-8 M6 | TUER.EX.DIN934-8 B.TRI.M 6 | ECROU HEX DIN934-8 BICR.M6 |
| 35 | 333690 | WATER INLET NUT | FIGURA 243 MI DE 1/2" LATON | ECROU ENTREE EAU |
| 36 | 333708 | VALVE EV220A 14B G12E NC000 | CUERPO VAL.EV220A G12 042U4022 | VANNE EV220A 14B G12E NC000 |
| 37 | 511022 | THREE TRACK ELECTROVALVE | ELECTROVALVULA TRES VIAS | ELECTROVANNE TROIS VOIES |
| | 510933 | REGULATOR 8 L/MIN.RED | REGULADOR DE 4L/MIN.ROJO CLARO | REGULATEUR 8 L/MIN ROUGE |
| | 300194 | YELLOW CASE 30053 | ESTUCHE AMARILLO 30053 | BOITE JAUNE 30053 |
| | 300202 | INTEGRAL GUIDE-MEMBRANE 30696 | MEMBRANA-GUIA INTEGRAL 30696 * | MEMBRANE-GUIDE INTEGRALE 30696 |
| | 332296 | COIL 255043000000 12VCC | BOBINA 255043000000 12VCC | BOBINE 255043000000 12VCC |

info@zipnasklade.ru
8(800)500-69-51

info@zipnasklade.ru
8(800)500-69-51

# MS-613 LCAT/CCAT
Pag. 07

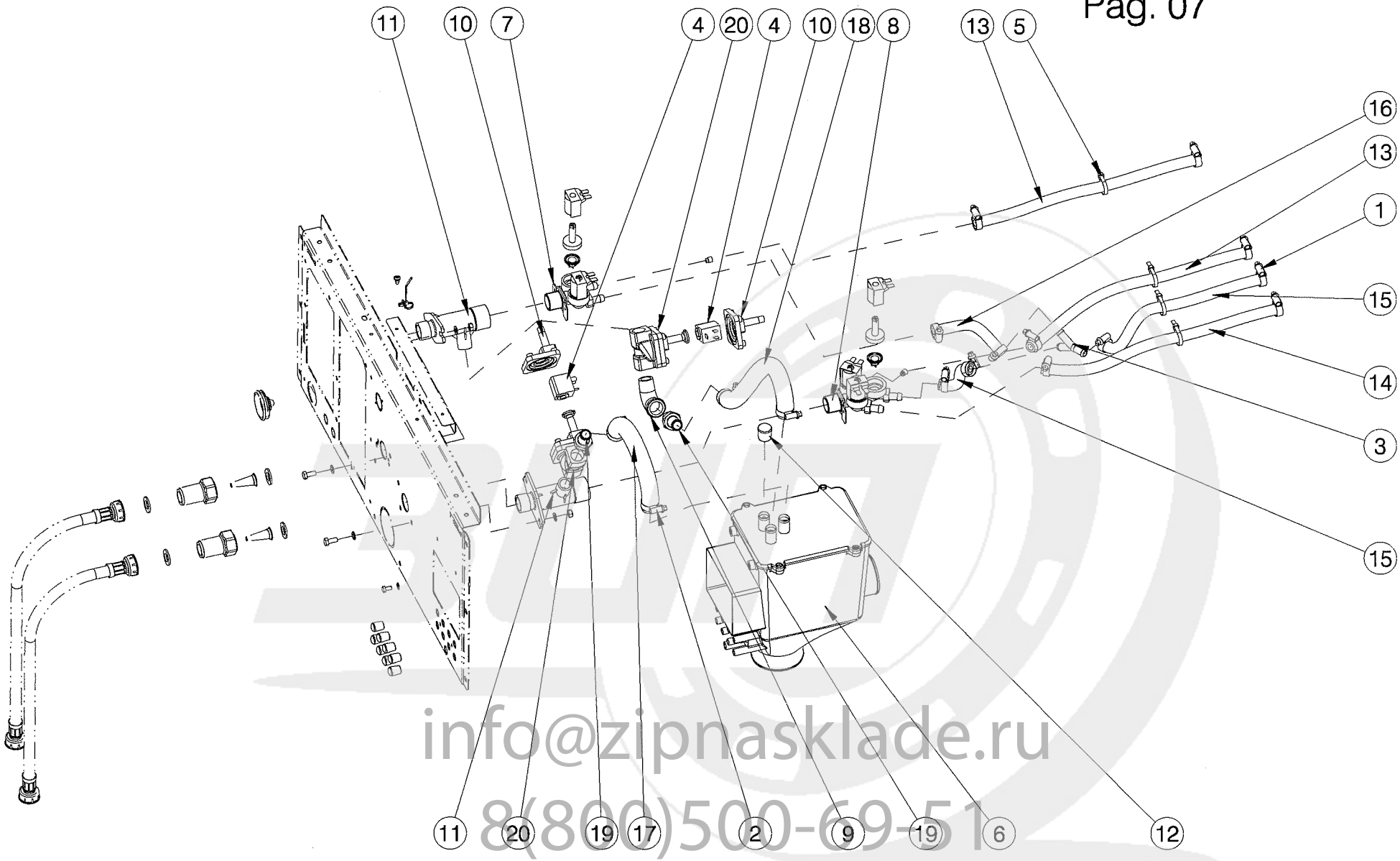


info@zipnasklade.ru
8(800)500-69-51

| Nº | REF | DENOMINATION | DENOMINACIÓN | DENOMINATION |
|---|---|---|---|---|
| 1 | 155150 | CLAMP 8-16 | ABRAZADERA 8- 16 * | BRIDE 8-16 |
| 2 | 156109 | CLAMP 16-27 | ABRAZADERA 16- 27 * | BRIDE 16-27 |
| 3 | 152165 | BRANCH | BIFURCACION | BIFURCATION |
| 4 | 333716 | COIL AB 5W 12V CC 042N0806 | BOBINA AB 5W 12V CC 042N0806 | BOBINE AB 5W 12V CC 042N0806 |
| 5 | 140525 | CLAMP 2244-0 | BRIDA UNEX 2244-0 * | BRIDE 2244-0 |
| 6 | 333658 | DISTRIBUTOR | DISTRIBUIDOR | DISTRIBUTEUR |
| 7 | 511089 | DOUBLE ELECTROVALVE 349 12VCC | ELECTROVALVULA DOS VIAS | ELECTROVANNE DOUBLE 349 12VCC |
| | 510933 | REGULATOR 8 L/MIN.RED | REGULADOR DE 4L/MIN.ROJO CLARO | REGULATEUR 8 L/MIN ROUGE |
| | 300194 | YELLOW CASE 30053 | ESTUCHE AMARILLO 30053 | BOITE JAUNE 30053 |
| | 300202 | INTEGRAL GUIDE-MEMBRANE 30696 | MEMBRANA-GUIA INTEGRAL 30696 * | MEMBRANE-GUIDE INTEGRALE 30696 |
| | 332296 | COIL 255043000000 12VCC | BOBINA 255043000000 12VCC | BOBINE 255043000000 12VCC |
| 8 | 422766 | 3-TRACK ELECTROVALVE | ELECTROVALVULA TRES VIAS | ELECTROVANNE TROIS VOIES |
| | 156265 | REGULATOR 3 L/MIN (BLACK) | REGULADOR DE 3 L/MIN. (NEGRO) | REGULATEUR 3 L/MIN (NOIR) |
| | 300194 | YELLOW CASE 30053 | ESTUCHE AMARILLO 30053 | BOITE JAUNE 30053 |
| | 300202 | INTEGRAL GUIDE-MEMBRANE 30696 | MEMBRANA-GUIA INTEGRAL 30696 * | MEMBRANE-GUIDE INTEGRALE 30696 |
| | 332296 | COIL 255043000000 12VCC | BOBINA 255043000000 12VCC | BOBINE 255043000000 12VCC |
| 9 | 129494 | ELBOW FIG 92 1/2" GALV | FIGURA 92 DE 1/2"AMAT GALV. | COUDE FIG 92 1/2" GALV |
| 10 | 341685 | SPARE-PARTS KIT EV220A 12-14B | KIT REPUES.EV220A 12-14B * | KIT RECHANGES EV220A 12-14B |
| 11 | 333682 | ELECTROVALVE BRACKET | SOPORTE ELECTROVALVULAS | SUPPORT ELECTROVANNES |
| 12 | 156687 | CONICAL END-PIECE R-16 D16 | TOPE CONICO REPRIMSA R-16 D16 | ARRET CONIQUE R-16 D16 |
| 13 | 411371 | WATER INLET HOSE | TUBO ENTRADA AGUA | TUBE ENTREE EAU |
| 14 | 427195 | WATER INLET HOSE | TUBO ENTRADA AGUA | TUBE ENTREE EAU |
| 15 | 432641 | WATER INLET HOSE | TUBO ENTRADA AGUA | TUBE ENTREE EAU |
| 16 | 432658 | WATER INLET HOSE | TUBO ENTRADA AGUA | TUBE ENTREE EAU |
| 17 | 432682 | WATER INLET HOSE | TUBO ENTRADA AGUA | TUBE ENTREE EAU |
| 18 | 432690 | WATER INLET HOSE | TUBO ENTRADA AGUA | TUBE ENTREE EAU |
| 19 | 333690 | WATER INLET NUT | FIGURA 243 MI DE 1/2" LATON | ECROU ENTREE EAU |
| 20 | 333708 | VALVE EV220A 14B G12E NC000 | CUERPO VAL.EV220A G12 042U4022 | VANNE EV220A 14B G12E NC000 |

info@zipnasklade.ru
8(800)500-69-51

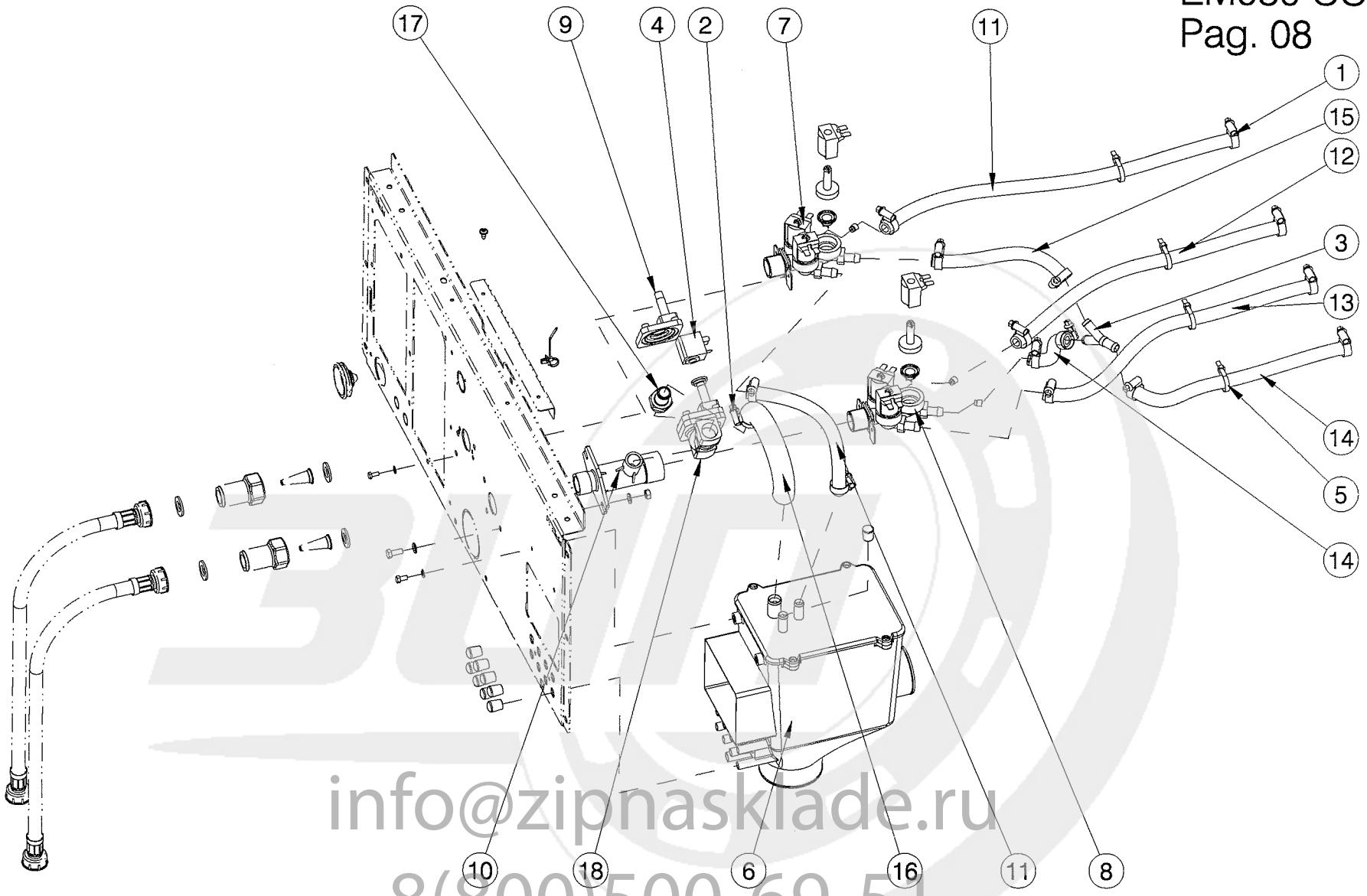


info@zipnasklade.ru
8(800)500-69-51

| Nº | REF | DENOMINATION | DENOMINACIÓN | DENOMINATION |
|---|---|---|---|---|
| 1 | 155150 | CLAMP 8-16 | ABRAZADERA 8- 16 * | BRIDE 8-16 |
| 2 | 156109 | CLAMP 16-27 | ABRAZADERA 16- 27 * | BRIDE 16-27 |
| 3 | 152165 | BRANCH | BIFURCACION | BIFURCATION |
| 4 | 333716 | COIL AB 5W 12V CC 042N0806 | BOBINA AB 5W 12V CC 042N0806 | BOBINE AB 5W 12V CC 042N0806 |
| 5 | 140525 | CLAMP 2244-0 | BRIDA UNEX 2244-0 * | BRIDE 2244-0 |
| 6 | 339689 | DISTRIBUTOR | DISTRIBUIDOR | DISTRIBUTEUR |
| 7 | 511022 | THREE TRACK ELECTROVALVE | ELECTROVALVULA TRES VIAS | ELECTROVANNE TROIS VOIES |
| | 510933 | REGULATOR 8 L/MIN.RED | REGULADOR DE 4L/MIN.ROJO CLARO | REGULATEUR 8 L/MIN ROUGE |
| | 300194 | YELLOW CASE 30053 | ESTUCHE AMARILLO 30053 | BOITE JAUNE 30053 |
| | 300202 | INTEGRAL GUIDE-MEMBRANE 30696 | MEMBRANA-GUIA INTEGRAL 30696 * | MEMBRANE-GUIDE INTEGRALE 30696 |
| | 332296 | COIL 255043000000 12VCC | BOBINA 255043000000 12VCC | BOBINE 255043000000 12VCC |
| 8 | 433656 | 3-TRACK ELECTROVALVE | ELECTROVALVULA TRES VIAS | ELECTROVANNE TROIS VOIES |
| | 156257 | REGULATOR 8 L/MIN.RED | REGULADOR DE 8 L/MIN. (ROJO) | REGULATEUR 8 L/MIN ROUGE |
| | 156265 | REGULATOR 3 L/MIN (BLACK) | REGULADOR DE 3 L/MIN. (NEGRO) | REGULATEUR 3 L/MIN (NOIR) |
| | 300194 | YELLOW CASE 30053 | ESTUCHE AMARILLO 30053 | BOITE JAUNE 30053 |
| | 300202 | INTEGRAL GUIDE-MEMBRANE 30696 | MEMBRANA-GUIA INTEGRAL 30696 * | MEMBRANE-GUIDE INTEGRALE 30696 |
| | 332296 | COIL 255043000000 12VCC | BOBINA 255043000000 12VCC | BOBINE 255043000000 12VCC |
| 9 | 341685 | SPARE-PARTS KIT EV220A 12-14B | KIT REPUES.EV220A 12-14B * | KIT RECHANGES EV220A 12-14B |
| 10 | 333682 | ELECTROVALVE BRACKET | SOPORTE ELECTROVALVULAS | SUPPORT ELECTROVANNES |
| 11 | 411363 | WATER INLET HOSE | TUBO ENTRADA AGUA | TUBE ENTREE EAU |
| 12 | 411371 | WATER INLET HOSE | TUBO ENTRADA AGUA | TUBE ENTREE EAU |
| 13 | 427195 | WATER INLET HOSE | TUBO ENTRADA AGUA | TUBE ENTREE EAU |
| 14 | 432641 | WATER INLET HOSE | TUBO ENTRADA AGUA | TUBE ENTREE EAU |
| 15 | 432658 | WATER INLET HOSE | TUBO ENTRADA AGUA | TUBE ENTREE EAU |
| 16 | 432666 | WATER INLET HOSE | TUBO ENTRADA AGUA | TUBE ENTREE EAU |
| 17 | 333690 | WATER INLET NUT | FIGURA 243 MI DE 1/2" LATON | ECROU ENTREE EAU |
| 18 | 333708 | VALVE EV220A 14B G12E NC000 | CUERPO VAL.EV220A G12 042U4022 | VANNE EV220A 14B G12E NC000 |

info@zipnasklade.ru
8(800)500-69-51

# EM030 CCAT
Pag. 09

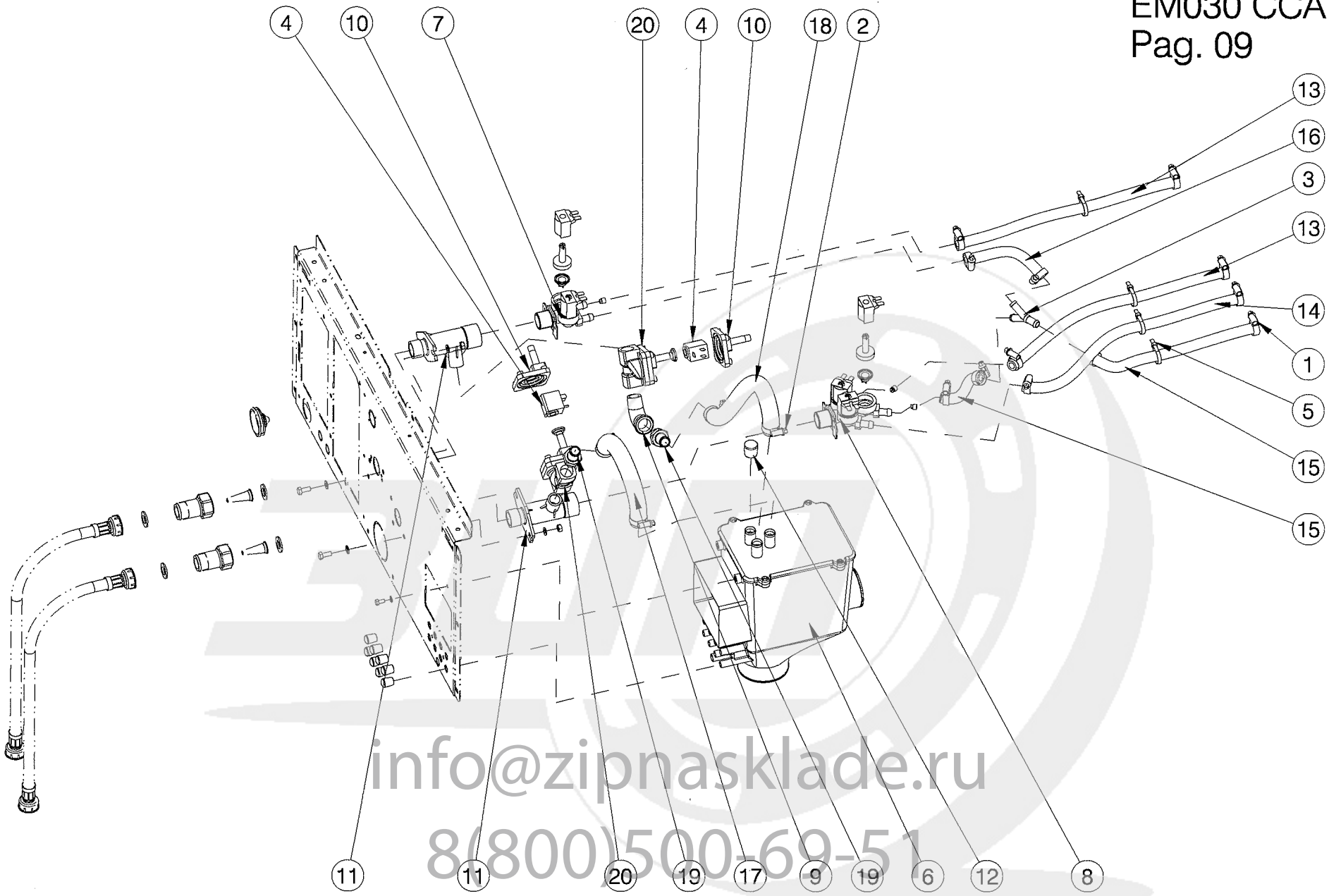


info@zipnasklade.ru
8(800)500-69-51

| Nº | REF | DENOMINATION | DENOMINACIÓN | DENOMINATION |
|---|---|---|---|---|
| 1 | 155150 | CLAMP 8-16 | ABRAZADERA 8- 16 * | BRIDE 8-16 |
| 2 | 156109 | CLAMP 16-27 | ABRAZADERA 16- 27 * | BRIDE 16-27 |
| 3 | 152165 | BRANCH | BIFURCACION | BIFURCATION |
| 4 | 333716 | COIL AB 5W 12V CC 042N0806 | BOBINA AB 5W 12V CC 042N0806 | BOBINE AB 5W 12V CC 042N0806 |
| 5 | 140525 | CLAMP 2244-0 | BRIDA UNEX 2244-0 * | BRIDE 2244-0 |
| 6 | 333658 | DISTRIBUTOR | DISTRIBUIDOR | DISTRIBUTEUR |
| 7 | 511089 | DOUBLE ELECTROVALVE 349 12VCC | ELECTROVALVULA DOS VIAS | ELECTROVANNE DOUBLE 349 12VCC |
| | 510933 | REGULATOR 8 L/MIN.RED | REGULADOR DE 4L/MIN.ROJO CLARO | REGULATEUR 8 L/MIN ROUGE |
| | 300194 | YELLOW CASE 30053 | ESTUCHE AMARILLO 30053 | BOITE JAUNE 30053 |
| | 300202 | INTEGRAL GUIDE-MEMBRANE 30696 | MEMBRANA-GUIA INTEGRAL 30696 * | MEMBRANE-GUIDE INTEGRALE 30696 |
| | 332296 | COIL 255043000000 12VCC | BOBINA 255043000000 12VCC | BOBINE 255043000000 12VCC |
| 8 | 433656 | 3-TRACK ELECTROVALVE | ELECTROVALVULA TRES VIAS | ELECTROVANNE TROIS VOIES |
| | 156257 | REGULATOR 8 L/MIN.RED | REGULADOR DE 8 L/MIN. (ROJO) | REGULATEUR 8 L/MIN ROUGE |
| | 156265 | REGULATOR 3 L/MIN (BLACK) | REGULADOR DE 3 L/MIN. (NEGRO) | REGULATEUR 3 L/MIN (NOIR) |
| | 300194 | YELLOW CASE 30053 | ESTUCHE AMARILLO 30053 | BOITE JAUNE 30053 |
| | 300202 | INTEGRAL GUIDE-MEMBRANE 30696 | MEMBRANA-GUIA INTEGRAL 30696 * | MEMBRANE-GUIDE INTEGRALE 30696 |
| | 332296 | COIL 255043000000 12VCC | BOBINA 255043000000 12VCC | BOBINE 255043000000 12VCC |
| 9 | 129494 | ELBOW FIG 92 1/2" GALV | FIGURA 92 DE 1/2"AMAT GALV. | COUDE FIG 92 1/2" GALV |
| 10 | 341685 | SPARE-PARTS KIT EV220A 12-14B | KIT REPUES.EV220A 12-14B * | KIT RECHANGES EV220A 12-14B |
| 11 | 333682 | ELECTROVALVE BRACKET | SOPORTE ELECTROVALVULAS | SUPPORT ELECTROVANNES |
| 12 | 156687 | CONICAL END-PIECE R-16 D16 | TOPE CONICO REPRIMSA R-16 D16 | ARRET CONIQUE R-16 D16 |
| 13 | 411371 | WATER INLET HOSE | TUBO ENTRADA AGUA | TUBE ENTREE EAU |
| 14 | 427195 | WATER INLET HOSE | TUBO ENTRADA AGUA | TUBE ENTREE EAU |
| 15 | 432641 | WATER INLET HOSE | TUBO ENTRADA AGUA | TUBE ENTREE EAU |
| 16 | 432658 | WATER INLET HOSE | TUBO ENTRADA AGUA | TUBE ENTREE EAU |
| 17 | 432682 | WATER INLET HOSE | TUBO ENTRADA AGUA | TUBE ENTREE EAU |
| 18 | 432690 | WATER INLET HOSE | TUBO ENTRADA AGUA | TUBE ENTREE EAU |
| 19 | 333690 | WATER INLET NUT | FIGURA 243 MI DE 1/2" LATON | ECROU ENTREE EAU |

info@zipnasklade.ru
8(800)500-69-51

| Nº | REF | DENOMINATION | DENOMINACIÓN | DENOMINATION |
|---|---|---|---|---|
| 20 | 333708 | VALVE EV220A 14B G12E NC000 | CUERPO VAL.EV220A G12 042U4022 | VANNE EV220A 14B G12E NC000 |

info@zipnasklade.ru
8(800)500-69-51

info@zipnasklade.ru
8(800)500-69-51

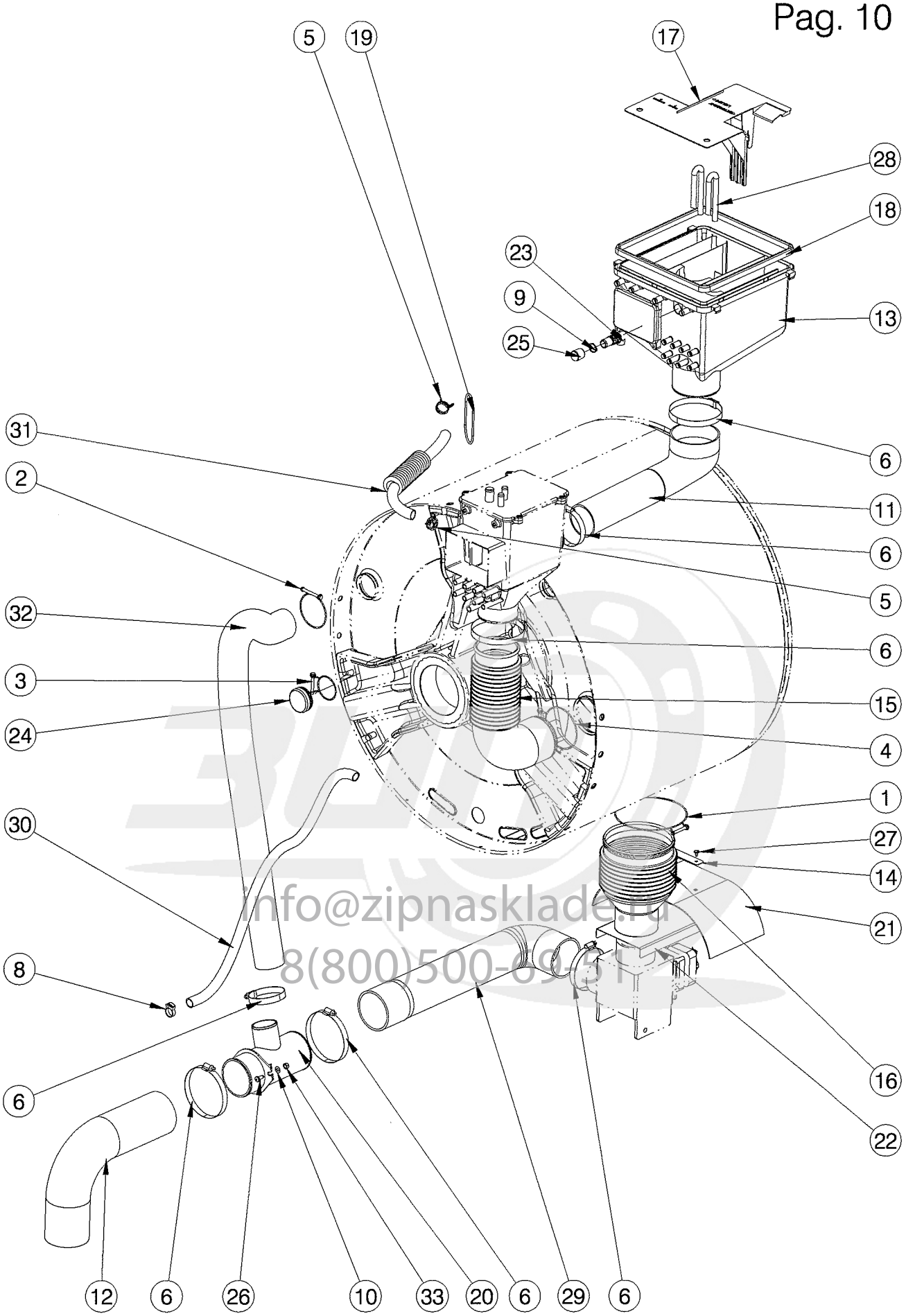


info@zipnasklade.ru
8(800)500-69-51

| Nº | REF | DENOMINATION | DENOMINACIÓN | DENOMINATION |
|---|---|---|---|---|
| 1 | 333450 | WASHER D137XD2 | ABRAZ.ALAMBRE D137XD2 | RONDELLE D137XD2 |
| 2 | 340505 | WASHER D58XD2 | ABRAZ.ALAMBRE SWHCFS 5850 | RONDELLE D58XD2 |
| 3 | 350439 | WASHER SWHCFS 4942 | ABRAZ.ALAMBRE SWHCFS 4942 | RONDELLE SWHCFS 4942 |
| 4 | 333443 | WASHER SWHCFS 8780 | ABRAZ.ALAMBRE SWHCFS 8780 | RONDELLE SWHCFS 8780 |
| 5 | 338897 | CLAMP 20,2 | ABRAZ.FIM 20202 B20,2 | BRIDE 20,2 |
| 6 | 132290 | CLAMP 301508-9 D50-70 | ABRAZADERA 50- 70 * | BRIDE 301508-9 D50-70 |
| 7 | 132340 | CLAMP 301510-0 D80-100 | ABRAZADERA 80-100 * | BRIDE 301510-0 D80-100 |
| 8 | 323675 | CLAMP NORMA 22HC0593 | ABRAZADERA NORMA 22HC0593 | COLLIER NORMA 22HC0593 |
| 9 | 131508 | FLEXIBLE RING E-17 DIN 471 | ANILLO ELASTICO E-17 DIN 471 | BAGUE ELASTIQUE E-17 DIN 471 |
| 10 | 149526 | BICR.WASHER B DIN125-ST 6,4 | ARAN.B DIN125-ST B.TRI. 6,4 | RONDELLE B DIN125-ST BICR.6,4 |
| 11 | 428110 | RUBBER ELBOW 313X67 | CODO GOMA 313 X 67 | COUDE GOMME 313X67 |
| 12 | 163253 | DRAIN OUTLET HOSE | TUBO SALIDA DESAGÜE | TUBE SORTIE VIDANGE |
| 13 | 511584 | SOAP DISPENSER SET | CONJUNTO DOSIFICADOR | ENSEMBLE BAC A PRODUITS |
| 14 | 431700 | DRAIN PROTECTION FIXING-PIECE | FIJACION PROTECCION DESAGÜE | FIXATION PROTECTION VIDANGE |
| 15 | 340943 | OUTERDRUM COLLECTOR BELLOWS | FUELLE COLECTOR ENVOLVENTE | DURITE COLLECTEUR CUVE |
| 16 | 333500 | OUTERDRUM DRAIN BELLOWS | FUELLE DESAGÜE ENVOLVENTE | DURITE VIDANGE CUVE |
| 17 | 344101 | SOAP DOSING INSERTO<br>(EM030)<br>(COIN CTRL MODELS ONLY) | INSERTO DOSIFICADOR<br>(EM030)<br>(PARA MODELOS A COIN CONTROL) | INSERTO BAC A PRODUITS<br>(EM030)<br>(POUR MODELO COIN CONTROL) |
| 18 | 321430 | SOAP DISPENSER GASKET | JUNTA DOSIFICADOR | JOINT BACS A PRODUITS |
| 19 | 159681 | TORIC GASKET 50X56X3 RE.2676 | JUNTA TORICA 50X56X3 | JOINT TORIQUE 50X56X3 REF.2676 |
| 20 | 333575 | DRAIN SLEEVE | MANGUITO DESAGÜE | FRETTE VIDANGE |
| 21 | 431692 | DRAIN COIL PROTECTION | PROTECCION BOBINA DESAGÜE | PROTECTION BOBINE VIDANGE |
| 22 | 423228 | DRAIN PROTECTION | PROTECCION DESAGÜE | PROTECTION VIDANGE |
| 23 | 321349 | WATER INLET RACCORD | RACOR ENTRADA AGUA DIRECTA | RACCORD ENTREE EAU |
| 24 | 349902 | RUBBER PLUG D42 | TAPON GOMA D42 | BOUCHON GOMME D42 |
| 25 | 156687 | CONICAL END-PIECE R-16 D16 | TOPE CONICO REPRIMSA R-16 D16 | ARRET CONIQUE R-16 D16 |
| 26 | 333625 | SCREW T25 M6X15 | TOR.ALOM.T25 A18EST.M6X15 TRI. | VIS T25 M6X15 |
| 27 | 183400 | CYL.PLATE SCREW ST-4 20 C/AL | TOR.CHAPA ST-4 20 C/AL.T25 * | VIS PLAQUE CYL.ST-4 20 C/AL |

info@zipnasklade.ru
8(800)500-69-51

| Nº | REF | DENOMINATION | DENOMINACIÓN | DENOMINATION |
|---|---|---|---|---|
| 28 | 339598 | ASPIRATION HOSE | TUBO ASPIRACION | TUBE ASPIRATION |
| 29 | 343707 | DRAIN HOSE | TUBO DESAGUE | TUBE VIDANGE |
| 30 | 283820 | BEARING BOX DRAIN HOSE | TUBO DESAGÜE CAJA COJINETES | TUBE VIDANGE BOITE ROULEMENTS |
| 31 | 338889 | VAPOUR OUTLET HOSE | TUBO DESVAPORIZADOR | TUBE SORTIE CONDENSATS |
| 32 | 432765 | OVERFLOW HOSE | TUBO REBOSADERO | TUBE DEVERSOIR |
| 33 | 176834 | SELFBLOCKING NUT DIN985 M-6 | TUER.AUTOBL.DIN985-8 B.TRI.M6 | ECROU AUTOBLOCANT DIN985 M-6 |
| | | WITHOUT ILLUSTRATION | SIN ILUSTRACION | SANS ILLUSTRATION |
| | 796870 | SIPHON CLEANING KIT | KIT LIMPIEZA SIFONES | KIT NETTOYAGE SIPHON |

info@zipnasklade.ru
8(800)500-69-51

info@zipnasklade.ru
8(800)500-69-51

# MS-613 LC
Pag. 11

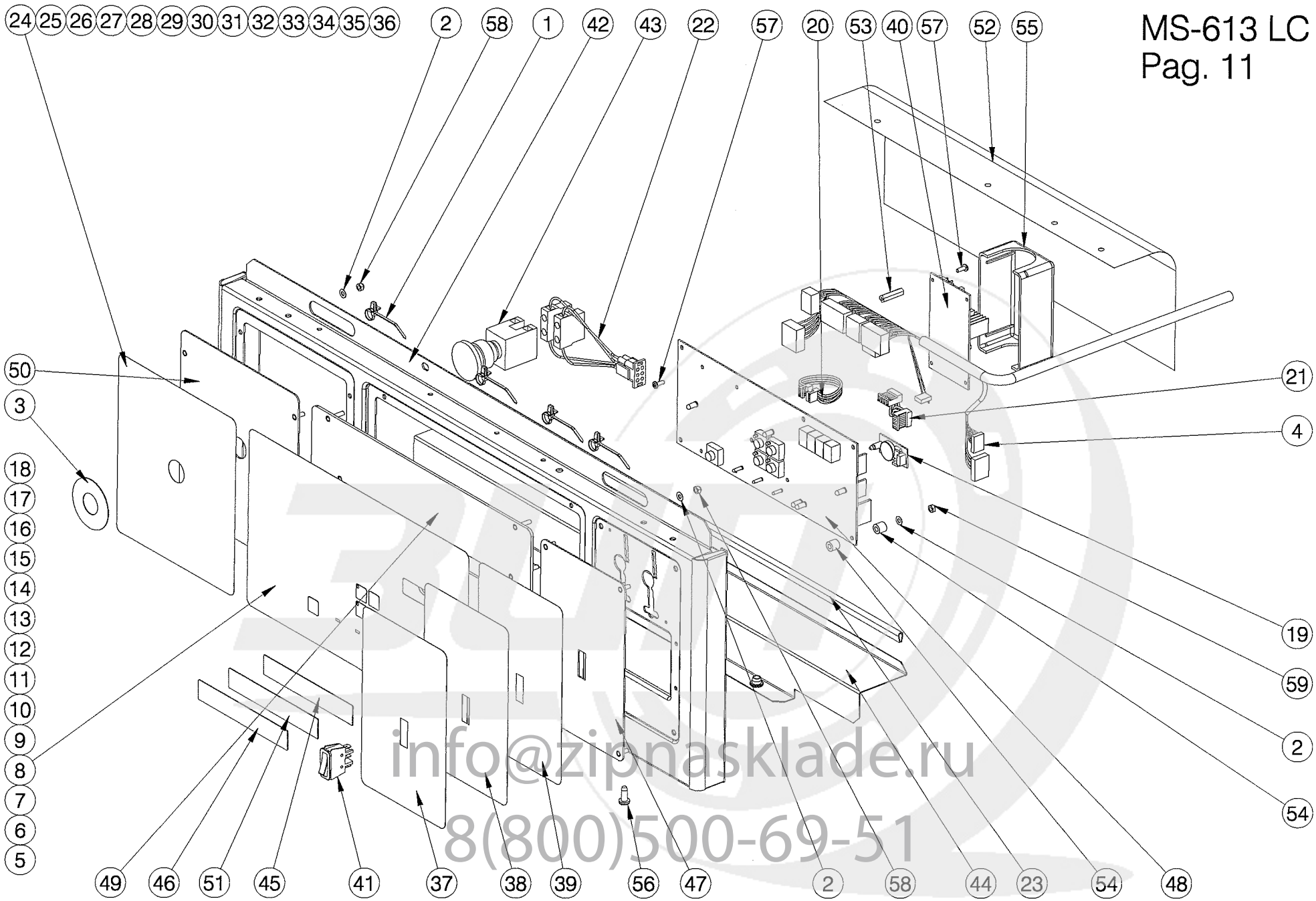


info@zipnasklade.ru
8(800)500-69-51

| Nº | REF | DENOMINATION | DENOMINACIÓN | DENOMINATION |
|---|---|---|---|---|
| 1 | 326132 | CLAMP ABA-036-48-0152-B | ABRAZADERA ABA-036-48-0152-B | BRIDE ABA-036-48-0152-B |
| 2 | 149476 | BICR.WASHER B DIN125-ST 4,3 | ARAN.B DIN125-ST B.TRI. 4,3 | RONDELLE B DIN125-ST BICR.4,3 |
| 3 | 192294 | YELLOW RING | ARO AMARILLO | BAGUE JAUNE |
| 4 | 343509 | HARNESS | CABLEADO ELECTRICO | CABLAGE |
| 5 | 342741 | WASHER-EXTRACTOR PLATE LC DA | CARATULA LAVADORA LC DA | PLAQUE LAVEUSE LC DA |
| 6 | 338715 | WASHER-EXTRACTOR PLATE LC DE | CARATULA LAVADORA LC DE | PLAQUE LAVEUSE LC DE |
| 7 | 342782 | WASHER-EXTRACTOR LC EL | CARATULA LAVADORA LC EL | PLAQUE LAVEUSE LC EL |
| 8 | 303719 | WASHER-EXTRACTOR PLATE LC EN | CARATULA LAVADORA LC EN | PLAQUE LAVEUSE LC EN |
| 9 | 338699 | WASHER-EXTRACTOR PLATE LC ES | CARATULA LAVADORA LC ES | PLAQUE LAVEUSE LC ES |
| 10 | 342840 | WASHER-EXTRACTOR PLATE LC FI | CARATULA LAVADORA LC FI | PLAQUE LAVEUSE LC FI |
| 11 | 338707 | WASHER-EXTRACTOR PLATE LC FR | CARATULA LAVADORA LC FR | PLAQUE LAVEUSE LC FR |
| 12 | 338723 | WASHER-EXTRACTOR PLATE LC IT | CARATULA LAVADORA LC IT | PLAQUE LAVEUSE LC IT |
| 13 | 342865 | WASHER-EXTRACTOR PLATE LC JA | CARATULA LAVADORA LC JA | PLAQUE LAVEUSE LC JA |
| 14 | 342808 | WASHER-EXTRACTOR PLATE LC NL | CARATULA LAVADORA LC NL | PLAQUE LAVEUSE LC NL |
| 15 | 342725 | WASHER-EXTRACTOR PLATE LC NO | CARATULA LAVADORA LC NO | PLAQUE LAVEUSE LC NO |
| 16 | 342881 | WASHER-EXTRACTOR PLATE LC PT | CARATULA LAVADORA LC PT | PLAQUE LAVEUSE LC PT |
| 17 | 342766 | WASHER-EXTRACTOR PLATE LC SV | CARATULA LAVADORA LC SV | PLAQUE LAVEUSE LC SV |
| 18 | 341271 | LC WASHER-EXTR.PLATE VIKING | CARATULA LAVADORA LC VIKING | PLAQUE LAVEUSE LC VIKING |
| 19 | 322677 | CLOCK CIRCUIT | CIRCUITO RELOJ | CIRCUIT HORLOGE |
| 20 | 432419 | IDENTIFICATION PLUG | CONECTORA IDENTIFICACION | CONNECTEUR IDENTIFICATION |
| 21 | 342451 | INSTALLATION PLUG | CONECTORA INSTALACION | CONNECTEUR INSTALLATION |
| 22 | 342006 | EMERGENCY STOP PLUG | CONECTORA PARO EMERGENCIA | CONNECTEUR ARRET EMERGENCE |
| 23 | 192021 | PROFILE | ENCUADERNADOR P (NEGRO) 2MT. | PROFILE |
| 24 | 342931 | SAFETY INSTR.LABEL DA | ETIQUETA INSTR. SEGURIDAD DA | ETIQUETTE INSTR.SECURITE DA |
| 25 | 338756 | SAFETY INSTR.LABEL DE | ETIQUETA INSTR.SEGURIDAD DE. | ETIQUETTE INSTR.SECURITE DE |
| 26 | 342972 | SAFETY INSTR.LABEL EL | ETIQUETA INSTR. SEGURIDAD EL | ETIQUETTE INSTR.SECURITE EL |
| 27 | 338020 | SAFETY INSTR.LABEL EN | ETIQUETA INSTR. SEGURIDAD EN | ETIQUETTE INSTR.SECURITE EN |
| 28 | 338731 | SAFETY INSTR.LABEL ES | ETIQUETA INSTR.SEGURIDAD ES. | ETIQUETTE INSTR.SECURITE ES |

info@zipnasklade.ru
8(800)500-69-51

| Nº | REF | DENOMINATION | DENOMINACIÓN | DENOMINATION |
|---|---|---|---|---|
| 29 | 343012 | SAFETY INSTR.LABEL FI | ETIQUETA INSTR, SEGURIDAD FI | ETIQUETTE INSTR.SECURITE FI |
| 30 | 338749 | SAFERY INSTR.LABEL FR | ETIQUETA INSTR.SEGURIDAD FR. | ETIQUETTE INSTR.SECURITE FR |
| 31 | 338764 | SAFETY INSTR.LABEL IT | ETIQUETA INSTR.SEGURIDAD IT. | ETIQUETTE INSTR.SECURITE IT |
| 32 | 343046 | SAFETY INSTR.LABEL JA | ETIQUETA INSTR. SEGURIDAD JA | ETIQUETTE INSTR.SECURITE JA |
| 33 | 342998 | SAFETY INSTR.LABEL NL | ETIQUETA INSTR. SEGURIDAD NL | ETIQUETTE INSTR.SECURITE NL |
| 34 | 342915 | SAFETY INSTR.LABEL NO | ETIQUETA INSTR. SEGURIDAD NO | ETIQUETTE INSTR.SECURITE NO |
| 35 | 343061 | SAFETY INSTR.LABEL PT | ETIQUETA INSTR. SEGURIDAD PT | ETIQUETTE INSTR.SECURITE PT |
| 36 | 342956 | SAFETY INSTR.LABEL SV | ETIQUETA INSTR. SEGURIDAD SV | ETIQUETTE INSTR.SECURITE SV |
| 37 | 338012 | START-STOP LABEL | ETIQUETA MARCHA-PARO | ETIQUETTE MARCHE-ARRET |
| 38 | 343962 | START-STOP LABEL JA | ETIQUETA MARCHA-PARO JA | ETIQUETTE  MARCHE-ARRET JA |
| 39 | 344655 | START-STOP LABEL JHC | ETIQUETA MARCHA-PARO JHC | ETIQUETTE MARCHE-ARRET JHC |
| 40 | 332718 | POWER SOURCE MW PS-25-12 | FUENTE ALIMENT.MW PS-25-12 | FONT ALIMENT.MW PS-25-12 |
| 41 | 300780 | SWITCH 1WIXII/3359 WHITE | INTERRUPTOR C1500AL AAG | INTERRUPTEUR 1WIXII/3359 BLANC |
| 42 | 428490 | CONTROL PANEL | PANEL DE MANDOS | PANNEAU DE COMMANDES |
| 43 | 341529 | EMERGENCY STOP LC | PARO EMERGENCIA LC | ARRET EMERGENCE LC |
| 44 | 432559 | CONTROL PANEL PROFILE | PERFIL PANEL DE MANDOS | PROFILE PANNEAU DE COMMANDES |
| 45 | 326082 | PLATE CONTINENTAL GIRBAU | PLACA CONTINENTAL GIRBAU | PLAQUE CONTINENTAL GIRBAU |
| 46 | 326074 | PLATE GIRBAU | PLACA GIRBAU | PLAQUE GIRBAU |
| 47 | 421263 | SWITCH PLATE | PLACA INTERRUPTOR | PLAQUE INTERRUPTEUR |
| 48 | 332361 | SPARE MICROPROC.BOARD (350538) | PLACA MICROPROC.RECAM.(350538) | PLAQUE MICROPROC.RECH.(350538) |
| 49 | 429894 | CONTROL PANEL PLATE | PLACA PANEL DE MANDOS | PLAQUE PANNEAU DE COMMANDES |
| 50 | 429886 | EMERGENCY STOP PLATE | PLACA PARO EMERGENCIA | PLAQUE ARRET EMERGENCE |
| 51 | 327023 | PLATE VIKING | PLACA VIKING | PLAQUE VIKING |
| 52 | 432575 | MICRO BOARD PROTECTION | PROTECCION PLACA MICRO | PROTECTION PLAQUE MICRO |
| 53 | 322685 | SEPARATOR HEX.HS6-8 | SEPARADOR EXAGONAL HS6-8 | SEPARATEUR HEX. HS6-8 |
| 54 | 322768 | MICRO BOARD SEPARATOR | SEPARADOR PLACA MICRO | SEPARATEUR PLAQUE MICRO |
| 55 | 326843 | MICROPROCESSOR PLATE COVER | TAPA PLACA MICROPROCESADOR | COUVERCLE PLAQUE MICROPROSSEUR |
| 56 | 333294 | SCREW T25 M6X15 | TOR.ALOM.T25 AR.18ESTR.M 6X15* | VIS T25 M6X15 |

info@zipnasklade.ru
8(800)500-69-51

| Nº | REF | DENOMINATION | DENOMINACIÓN | DENOMINATION |
|---|---|---|---|---|
| 57 | 322693 | SCREW PT KB35X10 WN1412 | TOR.EJOT PT SCREW K35X10* | VIS PT KN35X10 WN1412 |
| 58 | 132043 | SELFBLOCKING NUT DIN985 M 4 | TUER.AUTOBL.DIN985-8 B.TRI.M 4 | ECROU AUTOBLOCANT DIN985 M 4 |
| 59 | 150185 | BICR.HEX.NUT DIN934-8 M4 | TUER.EX.DIN934-8 B.TRI.M 4 | ECROU HEX.DIN934-8 BICR.M4 |

info@zipnasklade.ru
8(800)500-69-51

| Nº | REF | DENOMINATION | DENOMINACIÓN | DENOMINATION |
|---|---|---|---|---|
| | | FROM MACHINE Nr: | A PARTIR DE LA MAQUINA No : | A PARTIR DE LA MACHINE NR: |
| | | 2.030.001<br>1.380.001 | 2.030.001<br>1.380.001<br>. | 2.030.001<br>1.380.001 |
| 48 | 350538 | MICROP.BOARD HS/MS-6 LC/CC | PLACA MICROP.HS/MS-6 LC/CC | PLAQUE MICROP.HS/MS-6 LC/CC |

info@zipnasklade.ru
8(800)500-69-51

info@zipnasklade.ru
8(800)500-69-51

# MS-613 CC
Pag. 12

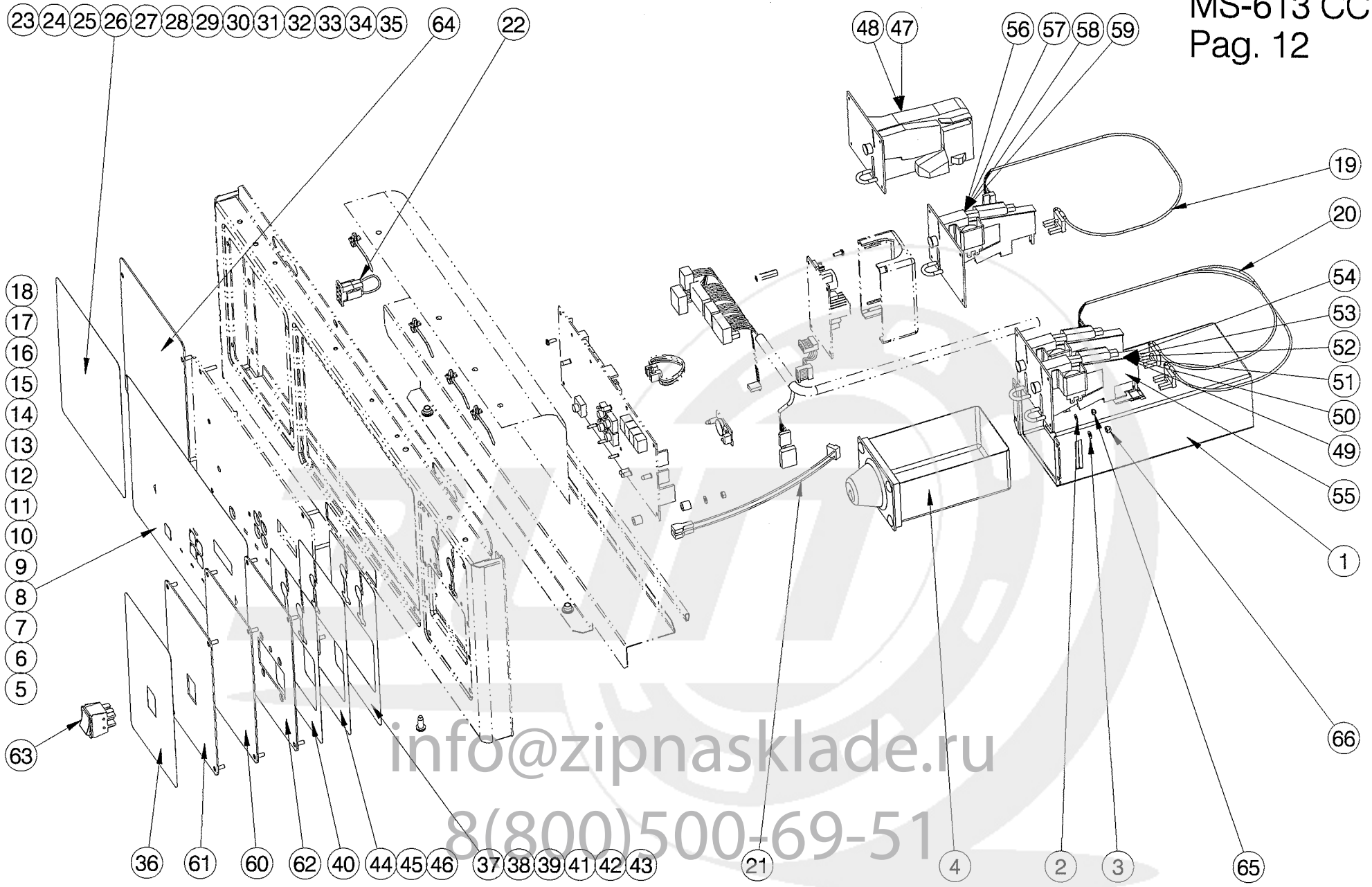


info@zipnasklade.ru
8(800)500-69-51

| Nº | REF | DENOMINATION | DENOMINACIÓN | DENOMINATION |
|---|---|---|---|---|
| 1 | 322313 | COIN BOX SUPPORT | APOYO CAJON MONEDAS | APPUI BOITE MONNAIE |
| 2 | 149484 | BICR.WASHER B DIN125-ST 3,2 | ARAN.B DIN125-ST B.TRI. 3,2 | RONDELLE B.DIN125-ST BICR. 3,2 |
| 3 | 149476 | BICR.WASHER B DIN125-ST 4,3 | ARAN.B DIN125-ST B.TRI. 4,3 | RONDELLE B DIN125-ST BICR.4,3 |
| 4 | 169169 | COIN BOX UG400A GI | CAJA MONEDAS UG400A GI * | BOITE MONNAIE UG400A GI |
| 5 | 342733 | WASHER-EXTRACTOR PLATE CC DA | CARATULA LAVADORA CC DA | PLAQUE LAVEUSE CC DA |
| 6 | 338673 | WASHER-EXTRACTOR PLATE CC DE | CARATULA LAVADORA CC DE | PLAQUE LAVEUSE CC DE |
| 7 | 342774 | WASHER-EXTRACTOR PLATE CC EL | CARATULA LAVADORA CC EL | PLAQUE LAVEUSE CC EL |
| 8 | 303701 | WASHER-EXTRACTOR PLATE CC EN | CARATULA LAVADORA CC EN | PLAQUE LAVEUSE CC EN |
| 9 | 338657 | WASHER-EXTRACTOR PLATE CC ES | CARATULA LAVADORA CC ES | PLAQUE LAVEUSE CC ES |
| 10 | 342832 | WASHER-EXTRACTOR PLATE CC FI | CARATULA LAVADORA CC FI | PLAQUE LAVEUSE CC FI |
| 11 | 338665 | WASHER-EXTRACTOR PLATE CC FR | CARATULA LAVADORA CC FR | PLAQUE LAVEUSE CC FR |
| 12 | 338681 | WASHER-EXTRACTOR PLATE CC IT | CARATULA LAVADORA CC IT | PLAQUE LAVEUSE CC IT |
| 13 | 342857 | WASHER-EXTRACTOR PLATE CC JA | CARATULA LAVADORA CC JA | PLAQUE LAVEUSE CC JA |
| 14 | 342790 | WASHER-EXTRACTOR PLATE CC NL | CARATULA LAVADORA CC NL | PLAQUE LAVEUSE CC NL |
| 15 | 342717 | WASHER-EXTRACTOR PLATE CC NO | CARATULA LAVADORA CC NO | PLAQUE LAVEUSE CC NO |
| 16 | 342873 | WASHER-EXTRACTOR PLATE CC PT | CARATULA LAVADORA CC PT | PLAQUE LAVEUSE CC PT |
| 17 | 342758 | WASHER-EXTRACTOR PLATE CC SV | CARATULA LAVADORA CC SV | PLAQUE LAVEUSE CC SV |
| 18 | 339390 | WASHER-EXTRAC.PLATE CC USA/CAN | CARATULA LAVADORA CC USA/CAN | PLAQUE LAVEUSE CC USA/CAN |
| 19 | 322461 | COIN-METER 1 PLUG | CONECTORA 1 MONEDERO | CONNECTEUR 1 MONNAYEUR |
| 20 | 322453 | COIN-METER 2 PLUG | CONECTORA 2 MONEDERO | CONNECTEUR 2 MONNAYEURS |
| 21 | 411678 | COIN-METER PLUG (WITH PUSH-BUTTON) | CONECTORA MONEDERO (CON PULSADOR) | CONNECTEUR MONNAYEUR (AVEC BOUTON-POUSSOIR) |
| 22 | 341990 | EMERGENCY STOP PLUG | CONECTORA PARO EMERGENCIA | CONNECTEUR ARRET EMERGENCE |
| 23 | 342949 | SAFETY INSTR.LABEL DA | ETIQUETA INSTR. SEGURIDAD DA | ETIQUETTE INSTR.SECURITE DA |
| 24 | 339218 | SAFETY INSTR.LABEL DE | ETIQUETA INSTR.SEGURIDAD DE. | ETIQUETTE INSTR.SECURITE DE |
| 25 | 342980 | SAFETY INSTR.LABEL EL | ETIQUETA INSTR. SEGURIDAD EL | ETIQUETTE INSTR.SECURITE EL |
| 26 | 303693 | SAFETY INSTR.LABEL EN | ETIQUETA INSTR. SEGURIDAD EN | ETIQUETTE INSTR.SECURITE EN |
| 27 | 339192 | SAFETY INSTR.LABEL ES | ETIQUETA INSTR.SEGURIDAD ES. | ETIQUETTE INSTR.SECURITE ES |
| 28 | 343020 | SAFETY INSTR.LABEL FI | ETIQUETA INSTR. SEGURIDAD FI | ETIQUETTE INSTR.SECURITE FI |

info@zipnasklade.ru
8(800)500-69-51

| Nº | REF | DENOMINATION | DENOMINACIÓN | DENOMINATION |
|---|---|---|---|---|
| 29 | 339200 | SAFETY INSTR.LABEL FR | ETIQUETA INSTR.SEGURIDAD FR. | ETIQUETTE INSTR.SECURITE FR |
| 30 | 339226 | SAFETY INSTR.LABEL IT | ETIQUETA INSTR.SEGURIDAD IT. | ETIQUETTE INSTR.SECURITE IT |
| 31 | 343053 | SAFETY INSTR.LABEL JAPANESE | ETIQUETA INSTR. SEGURIDAD JA | ETIQUETTE INSTR.SECURITE JA |
| 32 | 343004 | SAFETY INSTR.LABEL NL | ETIQUETA INSTR. SEGURIDAD NL | ETIQUETTE INSTR.SECURITE NL |
| 33 | 342923 | SAFETY INSTR.LABEL NO | ETIQUETA INSTR. SEGURIDAD NO | ETIQUETTE INSTR.SECURITE NO |
| 34 | 343079 | SAFETY INSTR.LABEL PT | ETIQUETA INSTR. SEGURIDAD PT | ETIQUETTE INSTR.SECURITE PT |
| 35 | 342964 | SAFETY INSTR.LABEL SV | ETIQUETA INSTR. SEGURIDAD SV | ETIQUETTE INSTR.SECURITE SV |
| 36 | 429878 | START-STOP LABEL CP (WITH PUSH-BUTTON) | ETIQUETA MARCHA-PARO CP (CON PULSADOR) | ETIQUETTE MARCHE-ARRET CP (AVEC BOUTON-POUSSOIR) |
| 37 | 339325 | COINMETER LABEL CC-MD EUR | ETIQUETA MONEDERO CC-MD EUR | ETIQUETTE MONNAYEUR CC-MD EUR |
| 38 | 339507 | COINMETER LABEL CC-MD GBP | ETIQUETA MONEDERO CC-MD GBP | ETIQUETTE MONNAYEUR CC-MD GBP |
| 39 | 339515 | COINMETER LABEL CC-MD NIS | ETIQUETA MONEDERO CC-MD NIS | ETIQUETTE MONNAYEUR CC-MD NIS |
| 40 | 354043 | COINMETER LABEL CC-MD NTD | ETIQUETA MONEDERO CC-MD NTD | ETIQUETTE MONNAYEUR CC-MD NTD |
| 41 | 339499 | COINMETER LABEL CC-MD USD | ETIQUETA MONEDERO CC-MD USD | ETIQUETTE MONNAYEUR CC-MD USD |
| 42 | 342550 | COINMETER LABEL CC-MD YEN | ETIQUETA MONEDERO CC-MD YEN | ETIQUETTE MONNAYEUR CC-MD YEN |
| 43 | 339549 | COINMETER LABEL CC-MS-25C | ETIQUETA MONEDERO CC-MS-25C | ETIQUETTE MONNAYEUR CC-MS-25C |
| 44 | 339564 | COINMETER LABEL CC-MS YEN | ETIQUETA MONEDERO CC-MS YEN | ETIQUETTE MONNAYEUR CC-MS YEN |
| 45 | 339523 | COINMETER LABEL CC-MS-FG | ETIQUETA MONEDERO CC-MS-FG | ETIQUETTE MONNAYEUR CC-MS-FG |
| 46 | 339234 | COINMETER LABEL CC-MU | ETIQUETA MONEDERO CC-MU | ETIQUETTE MONNAYEUR CC-MU |
| 47 | 327353 | COIN-METER EMP 500 | MONEDERO EMP 500 EUROS | MANNAYEUR EMP 500 |
| 48 | 411223 | COIN-METER EMP 500 | MONEDERO EMP 500 NO EUROS | MONNAYEUR EMP 500 |
| 49 | 323741 | COIN-METER F60.1W2403/0.2/2EUR | MONEDERO F60.1 0,20/2,00EUR * | MONNAYEUR F60.1W2403/ 0.2/2EUR |
| 50 | 326892 | COIN-METER F60 1W2004-M3 12VAC | MONEDERO F60.1 0,25/1,00CAD * | MONNAYEUR F60,1 0,25/1,00CAD |
| 51 | 323659 | COIN-METER F60 1W2004-M3 12VAC | MONEDERO F60.1 0,25/1,00USD * | MONNAYEUR F60 1W2004-M3 12VAC |
| 52 | 326769 | COIN-METER F60.1 0,50/1,00 GBP | MONEDERO F60.1 0,50/1,00GBP * | MONNAYEUR F60.1 0,50/1,00 GBP |
| 53 | 326835 | COIN-METER F60.1 1,00/5,00ILS | MONEDERO F60.1 1,00/5,00ILS * | MONNAYEUR F60.1 1,00/5,00 ILS |
| 54 | 431007 | COINMETER F60.1 100/500 JPY | MONEDERO F60.1 100/500 JPY * | MONNAYEUR F60.1 100/500 JPY |
| 55 | 354035 | COINMETER F60.1 10/50 NTD | MONEDERO F60.1 10/50NTD * | MONNAYEUR F60.1 10/50 NTD |
| 56 | 323642 | COIN-METER F60,11W2004-M112VAC | MONEDERO F60.11 0,25USD * | MONNAYEUR F60.11W2004-M1 12VAC |

info@zipnasklade.ru
8(800)500-69-51

| Nº | REF | DENOMINATION | DENOMINACIÓN | DENOMINATION |
|---|---|---|---|---|
| 57 | 326777 | COIN-METER F60.11 100YEN | MONEDERO F60.11 100YEN * | MONNAYEUR F60.11 100YEN |
| 58 | 344622 | COIN-METER F60.11 10NTD | MONEDERO F60.11 10NTD * | MONNAYEUR F60.11 10NTD |
| 59 | 323733 | COIN-METER F60.11W2000-TOKEN G | MONEDERO F60.11 FICHA GIRBAU * | MONNAYEUR F60.11W2000 JETON GI |
| 60 | 428656 | BLIND PLATE | PLACA CIEGA | PLAQUE AVEUGLE |
| 61 | 422998 | SWITCH PLATE | PLACA INTERRUPTOR | PLAQUE INTERRUPTEUR |
| 62 | 433532 | CARD READER PLATE | PLACA LECTOR TARJETA | PLAQUE LECTEUR CARTE |
| 63 | 138339 | PUSH-BUTTON 2WIXII/5518 (WITH PUSH-BUTTON) | PULSADOR C6061AL * (CON PULSADOR) | BOUTON-POUSSOIR 2WIXII/5518 (AVEC BOUTON-POUSSOIR) |
| 64 | 422972 | CONTROL PANEL COVER | TAPA PANEL DE MANDOS | COUVERCLE PANNEAU DE COMMANDES |
| 65 | 129692 | SELFBLOCKING NUT DIN985 M 3 | TUER.AUTOBL.DIN985-8 B.TRI.M 3 | ECROU AUTOBLOCANT DIN985 M 3 |
| 66 | 132043 | SELFBLOCKING NUT DIN985 M 4 | TUER.AUTOBL.DIN985-8 B.TRI.M 4 | ECROU AUTOBLOCANT DIN985 M 4 |
| | | WITHOUT ILLUSTRATION | SIN ILUSTRACION | SANS ILLUSTRATION |
| | 796839 | VENDING VN SERIE 6 SET | KIT VENDING VN SERIE 6 | KIT VENDING VN SERIE 6 |

info@zipnasklade.ru
8(800)500-69-51

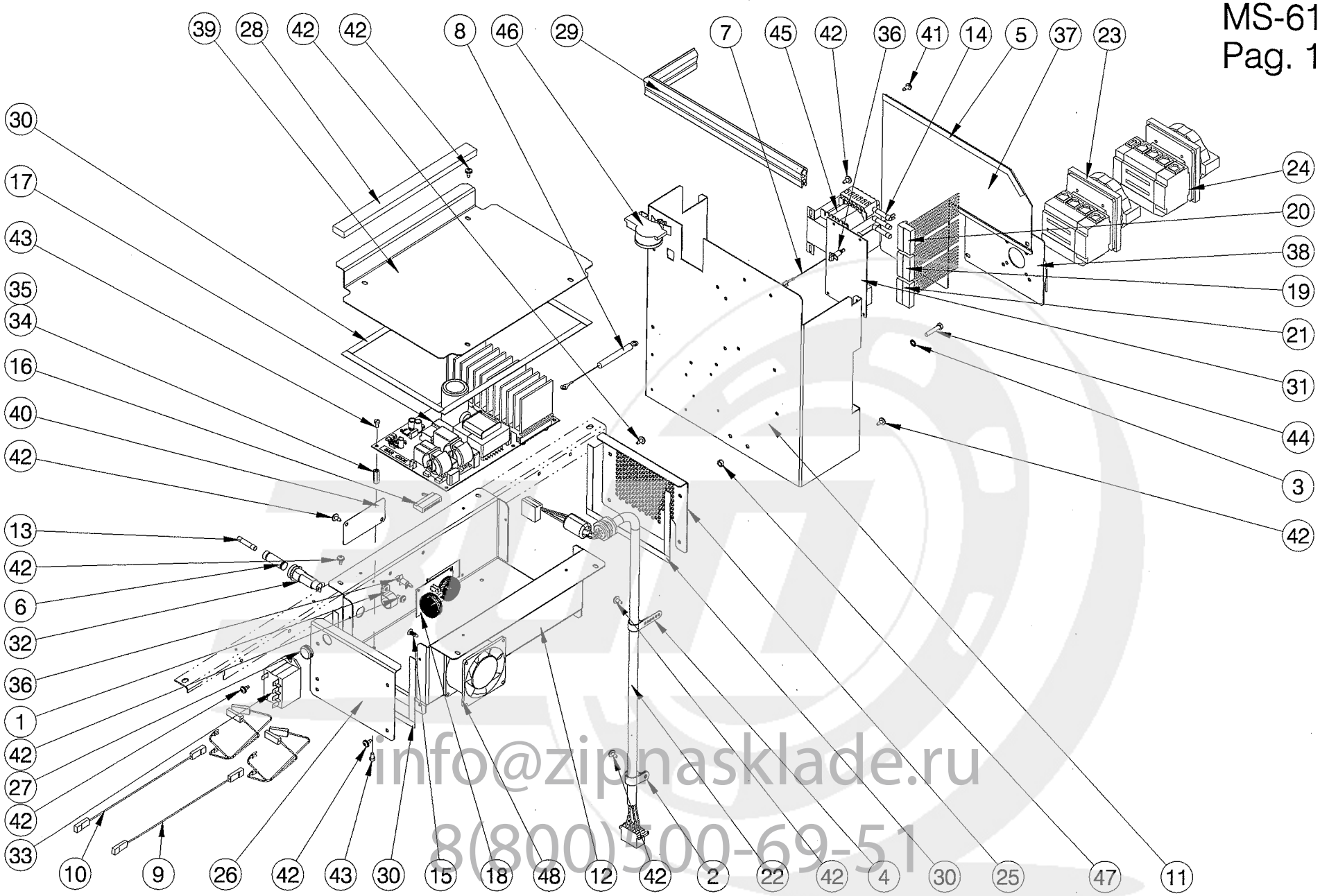


info@zipnasklade.ru
8(800)500-69-51

| Nº | REF | DENOMINATION | DENOMINACIÓN | DENOMINATION |
|---|---|---|---|---|
| 1 | 323055 | ALUMINIUM CLAMP AL2 | ABRAZADERA ALUMINIO AL2 | BRIDE ALUMINIUM AL2 |
| 2 | 332957 | ALUMINIUM WASHER AL9 | ABRAZADERA ALUMINIO AL9 | RONDELLE ALUMINIUM AL9 |
| 3 | 149724 | BICR EXT.TOOT.WASH.DIN6798 M5 | ARAN.DEN.EXT.B.TRI.DIN6798M 5 | RONDEL DEN.EX.BICR.DIN6798 M5 |
| 4 | 140418 | CLAMP UNEX REF 1201 | BRIDA UNEX 1201 | BRIDE UNEX REF 1201 |
| 5 | 110114 | PROFILE EXTRA 5463GREY 6X9X4 | BURL.AISLAN.TESA 5463-22 6X9X4 | PROFILE EXTRA 5463GRIS 6X9X4 |
| 6 | 137661 | BAYONET HEAD | CABEZA BAYONETA FEK.031.1613 | TETE BAYONETTE |
| 7 | 430231 | EXTERNAL DOSING WIRE (EM030) | CABLE DOSIFICACION EXT. (EM030) | CABLE DOSAGE EXTERNE (EM030) |
| 9 | 341818 | CONVERTER WIRES (EM030) | CABLES CONVERTIDOR (EM030) | CABLES CONVERTISSEUR (EM030) |
| 10 | 344358 | CONVERTER WIRES (MS-613) | CABLES CONVERTIDOR (MS-613) | CABLES CONVERTISSEUR (MS-613) |
| 11 | 431098 | POWER INLET BOX | CAJA ENTRADA CORRIENTE | BOITE ENTREE COURANT |
| 12 | 431049 | VARIATOR BOX | CAJA VARIADOR | BOITE VARIATEUR |
| 13 | 339127 | FUSE SPT 0001.2534 10A | CART.FUSIB.SPT 0001.2534 10A * | CARTOUCHE SPT 0001.2534 10A |
| 14 | 321125 | FUSE SPT 1 A | CART.FUSIB.SPT 0001.2524 1 A* | CARTOUCHE FUS. SPT 1 A |
| 15 | 348540 | CLIP UNDER PRESSURE | CLIP A PRESION * | CLIP A PRESSION |
| 16 | 432427 | CONVERTER PLUG | CONECTORA CONVERTIDOR | CONNECTEUR CONVERTISSEUR |
| 17 | 332734 | FREQ.INVERTER DANFOSS 1800 | CONVERTIDOR FREC.DANFOSS 1800 | CONVERTISSEUR FREQ.DANFOSS1800 |
| 18 | 344325 | EMC AUXILIARY FILTER (MS-613) | FILTRO EMC AUXILIAR (MS-613) | FILTRE EMC AUXLIAIRE (MS-613) |
| 19 | 341974 | ELECTROVALVE ELEC.INST. | INST. ELEC. ELECTROVALVULAS | INST.ELEC.ELECTROVANNES |
| 20 | 342600 | ELEC.INST. WITHOUT TRANSFORMER (EM030) | INST. ELEC. SIN TRANSFORMADOR (EM030) | INST.ELEC.SANS TRANSFORMATEUR (EM030) |
| 21 | 341867 | TRANSFORMER ELEC.INST. (MS-613) | INST. ELEC. TRANSFORMADOR (MS-613) | INST.ELEC.TRANSFORMATEUR (MS-613) |
| 22 | 341842 | MOTOR ELEC.INST. | INST. ELEC. MOTOR | INST.ELEC.MOTEUR |
| 23 | 344176 | SECTION SWITCH 32A (FOR MOD. HOT WATER/STEAM) (FOR MACHINES ELECTR.HEATING) (FOR THREE-PHASE) | INTERRUPTOR SECCIONADOR 32A (PARA MOD.AGUA CALIENTE/VAPOR) (PARA MODELOS CALEFAC.ELECTR.) (PARA TRIFASICO) | INTERRUPTEUR SECTIONNEUR 32A (POUR MOD.EAU CHAUDE/VAPEUR) (POUR MACHINES CHAUF.ELECTR.) (POUR TRIPHASE) |
| 24 | 344168 | SECTION SWITCH 63A (FOR SINGLE-PHASE) | INTERRUPTOR SECCIONADOR 63A (PARA MONOFASICO) | INTERRUPTEUR SECTIONNEUR 63A (POUR MONOPHASE) |

info@zipnasklade.ru
8(800)500-69-51

| Nº | REF | DENOMINATION | DENOMINACIÓN | DENOMINATION |
|---|---|---|---|---|
| 25 | 422535 | VARIATOR BOX SIDE PANEL | LATERAL CAJA VARIADOR | LATERAL BOITE VARIATEUR |
| 26 | 431056 | VARIATOR BOX SIDE PANEL | LATERAL CAJA VARIADOR | LATERAL BOITE VARIATEUR |
| 27 | 332601 | SHEATH-LODGING DGB-7 | PASAMUROS DGB-7 | LOGEMENT DGB-7 |
| 28 | 439000 | COVER SHOCK-ABSORBER PROFILE | PERFIL AMORTIGUADOR TAPA | PROFIL AMORTISSEUR COUVERCLE |
| 29 | 431197 | POWER INLET BOX PROFILE | PERFIL CAJA ENTRADA CORRIENTE | PROFILE BOITE ENTREE COURANT |
| 30 | 321273 | PROFILE E0819T00000 UL94HB | PERFIL E0813T00000 UL94HB | PROFILE E0819T00000 UL94HB |
| 31 | 332395 | AUXILIARY PLATE HS-60** | PLACA AUXILIAR HS-60** | PLAQUE AUXILIAIRE HS-60** |
| 32 | 160119 | FUSE HOLDER REF.FEC 031 1631 | PORTAFUSIBLES REF.FEC.031.1631 | PORTE-FUSIBLE REF.FEC 031 1631 |
| 33 | 322701 | RELAY OMROM G7L-2A-TUB 12VDC | RELE OMRON G7L-2A-TUB 12VDC | RELAIS OMROM G7L-2A-TUB 12VDC |
| 34 | 332726 | HEX SEPARATOR HTSB-M4-20-7-1<br>(MS-613)<br>(6 UNITS)<br><br>(EM030)<br>(1 UNIT) | SEPARADOR HEX.HTSB-M4-20-7-1<br>(MS-613)<br>(6 UNIDADES)<br>.<br>(EM030)<br>(1 UNIDAD) | SEPARATEUR HEX HTSB-M4-20-7-1<br>(MS-613)<br>(6 UNITÉS)<br><br>(EM030)<br>(1 UNITÉ) |
| 35 | 341933 | HEX SEPARATOR HTSN-M4-20-8-1<br>(EM030)<br>(5 UNITS) | SEPARADOR HEX.HTSN-M4-20-8-1<br>(EM030)<br>(5 UNIDADES) | SEPARATEUR HEX HTSN-M4-20-8-1<br>(EM030)<br>(5 UNITÉS) |
| 36 | 332809 | CIRCUIT BRACKET LCBS-4-7-01 | SOPORTE CIRCUITO LCBS-4-7-01 | SUPPORT CIRCUIT LCBS-4-7-01 |
| 37 | 431684 | POWER INLET COVER | TAPA ENTRADA CORRIENTE | COUVERCLE ENTREE COURANT |
| 38 | 431114 | SELECTOR COVER | TAPA SELECTOR | COUVERCLE SELECTEUR |
| 39 | 431148 | VARIATOR COVER | TAPA VARIADOR | COUVERCLE VARIATEUR |
| 40 | 430991 | VARIATOR PLUG COVER | TAPETA CONECTOR VARIADOR | COUVERCLE CONNECTEUR VARIATEUR |
| 41 | 328229 | SCREW ALO.T25 AR.18ESTR M 4X10 | TOR.ALOM.T25 AR.18ESTR.M 4X10* | VIS ALOM.T25 AR.18ESTR.M 4X10 |
| 42 | 183400 | CYL.PLATE SCREW ST-4 20 C/AL | TOR.CHAPA ST-4 20 C/AL.T25 * | VIS PLAQUE CYL.ST-4 20 C/AL |
| 43 | 146076 | BICR ROUND SCREW DIN84 M 4X 8 | TOR.CIL.DIN84-4.8 B.TRI.M 4X 8 | VIS ROND BICR DIN84-4.8 M 4X 8 |
| 44 | 146225 | BI.HEX SCREW DIN933-8.8 M-5X25 | TOR.EX.DIN933-8.8 B.TRI.M 5X25 | VIS HEX BICR.DIN933-8.8 M-5X25 |
| 45 | 320614 | TRASNFORMER IP00 100 VA<br>(MS-613) | TRANSFORMADOR IP00 100 VA *<br>(MS-613) | TRANSFORMATEUR IP00 100 VA<br>(MS-613) |
| 46 | 322784 | PRESSURE TRANSMITTER 400.95100 | TRANSM.PRESION HUBA 400.95100 | PRESSOSTAT HUBA 400.95100 |
| 47 | 150177 | BICR HEX NUT DIN934-8 M5 | TUER.EX.DIN934-8 B.TRI.M 5 | ECROU HEX DIN934-8 BIC.M5 |
| 48 | 420976 | CONVERTER FAN | VENTILADOR CONVERTIDOR | VENTILATEUR CONVERTISSEUR |

info@zipnasklade.ru
8(800)500-69-51

| Nº | REF | DENOMINATION | DENOMINACIÓN | DENOMINATION |
|---|---|---|---|---|
| | | FROM MACHINE Nr: | A PARTIR DE LA MAQUINA No : | A PARTIR DE LA MACHINE NR: |
| | | 1.380.001 | 1.380.001 | 1.380.001 |
| 8 | 453548 | FILTER WIRE CEM (EM030) | CABLE FILTRO CEM (EM030) | CABLE FILTRE CEM (EM030) |

info@zipnasklade.ru
8(800)500-69-51

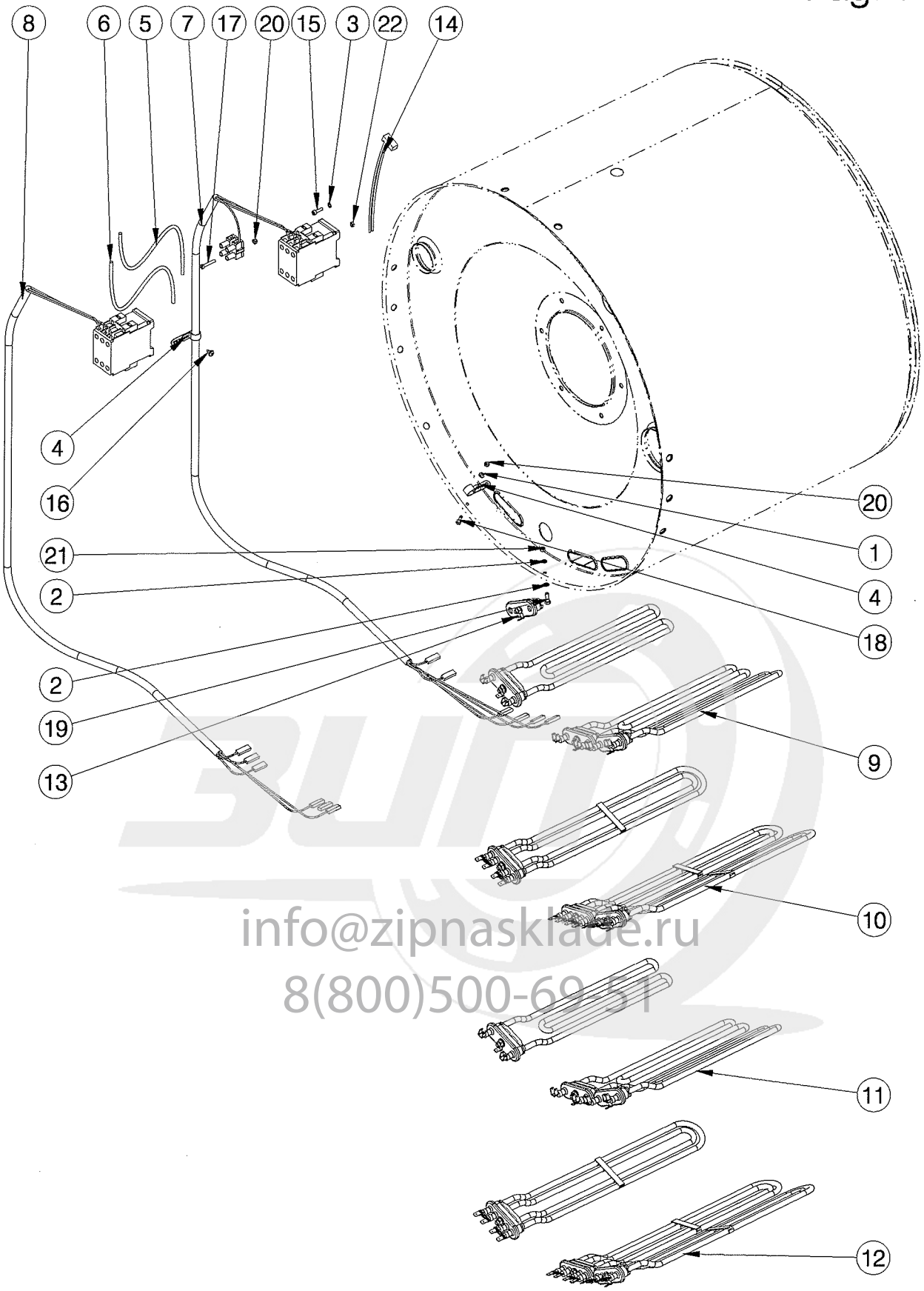


info@zipnasklade.ru
8(800)500-69-51

| Nº | REF | DENOMINATION | DENOMINACIÓN | DENOMINATION |
|---|---|---|---|---|
| | | ELECTRIC HEATING KITS | KITS CALEFACCION ELECTRICA<br>. | KITS CHAUFFAGE ELECTRIQUE |
| | 796888 | ELEC.HEATING KIT 1PH 20-230V<br>(MS-613) | KIT CAL.E.1PH 200-230V<br>(MS-613) | KIT CHAUFF.ELEC.1PH 200-230V<br>(MS-613) |
| | 796896 | EL.HEAT.KIT 1PH(208-240)/240V<br>(EM030)<br>(FOR 208-240V)<br>(MS-613)<br>(FOR 240V) | KIT CAL.E.1PH(208-240)/240V<br>(EM030)<br>(PARA 208-240V)<br>(MS-613)<br>(PARA 240V) | KIT CHAUFF.EL.1PH(208-240)240V<br>(EM030)<br>(POUR 208-240V)<br>(MS-613)<br>(POUR 240V) |
| | 796904 | EL.HT.KIT 3PH 200-230/380-400V<br>(MS-613) | KIT CAL.E.3PH 200-230/380-400V<br>(MS-613) | KIT CH.EL.3PH 200-230/380-400V<br>(MS-613) |
| | 796912 | EL.H.KIT 3PH(208-240)/240/415<br>(EM030)<br>(FOR 208-240V)<br>(MS-613)<br>(FOR 240 AND 415V) | KIT CAL.E.3PH(208-240)/240/415<br>(EM030)<br>(PARA 208-240V)<br>(MS-613)<br>(PARA 240 Y 415V)<br>. | KIT CH.EL.3PH(208-240)/240/415<br>(EM030)<br>(POUR 208-240V)<br>(MS-613)<br>(POUR 240 ET 415V) |
| 1 | 149476 | BICR.WASHER B DIN125-ST 4,3 | ARAN.B DIN125-ST B.TRI. 4,3 | RONDELLE B DIN125-ST BICR.4,3 |
| 2 | 149534 | BICR.WASHER B DIN125-ST 5,3 | ARAN.B DIN125-ST BICR. 5,3 | RONDELLE B BICR.DIN125-ST 5,3 |
| 3 | 149732 | BICR.EXT TOOT.WASH DIN6798 M4 | ARAN.DEN.EXT.B.TRI.DIN6798M 4 | RONDEL.DEN.EX.BICR.DIN6798 M4 |
| 4 | 140418 | CLAMP UNEX REF 1201 | BRIDA UNEX 1201 | BRIDE UNEX REF 1201 |
| 5 | 341941 | CONTACTOR SUPPLY WIRES<br>(FOR MACHINES ELECTR.HEATING)<br>(FOR SINGLE-PHASE) | CABLES ALIMENTACION CONTACTOR<br>(PARA MODELOS CALEFAC.ELECTR.)<br>(PARA MONOFASICO) | CABLES ALIMENTATION CONTACTEUR<br>(POUR MACHINES CHAUF.ELECTR.)<br>(POUR MONOPHASE) |
| 6 | 432708 | CONTACTOR SUPPLY WIRES<br>(FOR MACHINES ELECTR.HEATING)<br>(FOR THREE-PHASE) | CABLES ALIMENTACION CONTACTOR<br>(PARA MODELOS CALEFAC.ELECTR.)<br>(PARA TRIFASICO) | CABLES ALIMENTATION CONTACTEUR<br>(POUR MACHINES CHAUF.ELECTR.)<br>(POUR TRIPHASE) |
| 7 | 341826 | HEATING CONTACTOR WIRES<br>(FOR THREE-PHASE) | CABLES CONTACTOR CALEFACCION<br>(PARA TRIFASICO) | CABLES CONTACTEUR CHAUFFAGE<br>(POUR TRIPHASE) |
| 8 | 341834 | HEATING CONTACTOR WIRES<br>(FOR SINGLE-PHASE) | CABLES CONTACTOR CALEFACCION<br>(PARA MONOFASICO) | CABLES CONTACTEUR CHAUFFAGE<br>(POUR MONOPHASE) |
| 9 | 342642 | HEATER 230V 3000W | CALEFACTOR 230V 3000W | RESISTANCE 230V 3000W |
| 10 | 340851 | HEATER 230V 4000W | CALEFACTOR 230V 4000W | RESISTANCE 230V 4000W |
| 11 | 342659 | HEATER 240V 3000W | CALEFACTOR 240V 3000W | RESISTANCE 240V 3000W |
| 12 | 340869 | HEATER 240V 4000W | CALEFACTOR 240V 4000W | RESISTANCE 240V 4000W |
| 13 | 121962 | HEATER INLET LID | CIERRE ENTRADA CALEFACTOR * | FERMETURE ENTREE RESISTANCE |
| 14 | 341966 | HEATING RELAY ELEC.INST. | INST. ELEC. RELE CALEFACCION | INST.ELEC.RELAIS CHAUFFAGE |

info@zipnasklade.ru
8(800)500-69-51

| Nº | REF | DENOMINATION | DENOMINACIÓN | DENOMINATION |
|---|---|---|---|---|
| 15 | 191254 | ALLEN SCREW DIN 912 M 4X 15 | TOR.ALLDIN912-8.8 B.TRI.M 4X15 | VIS ALLEN DIN 912 M 4X 15 |
| 16 | 183400 | CYL.PLATE SCREW ST-4 20 C/AL | TOR.CHAPA ST-4 20 C/AL.T25 * | VIS PLAQUE CYL.ST-4 20 C/AL |
| 17 | 146183 | BICR CYL SCREW DIN 84 M-4X25 | TOR.CIL.DIN84-4.8 B.TRI.M 4X25 | VIS CYL BICR DIN 84 M-4X25 |
| 18 | 146266 | BICR.HEX SCREW DIN933-8 M-4X15 | TOR.EX.DIN933-4.8 B.TRI.M 4X15 | VIS HEX BICR.DIN933-8.8 M-4X15 |
| 19 | 146282 | BICR.HEX SCREW DIN933-8 M 5X15 | TOR.EX.DIN933-8.8 B.TRI.M 5X15 | VIS HEX BICR.DIN933-8.8 M 5X15 |
| 20 | 132043 | SELFBLOCKING NUT DIN985 M 4 | TUER.AUTOBL.DIN985-8 B.TRI.M 4 | ECROU AUTOBLOCANT DIN985 M 4 |
| 21 | 176826 | SELF-BLOCKING NUT DIN 985 M-5 | TUER.AUTOBL.DIN985-8 B.TRI.M5 | ECROU AUTOBLOCANT DIN 985 M-5 |
| 22 | 150185 | BICR.HEX.NUT DIN934-8 M4 | TUER.EX.DIN934-8 B.TRI.M 4 | ECROU HEX.DIN934-8 BICR.M4 |

info@zipnasklade.ru
8(800)500-69-51

info@zipnasklade.ru
8(800)500-69-51

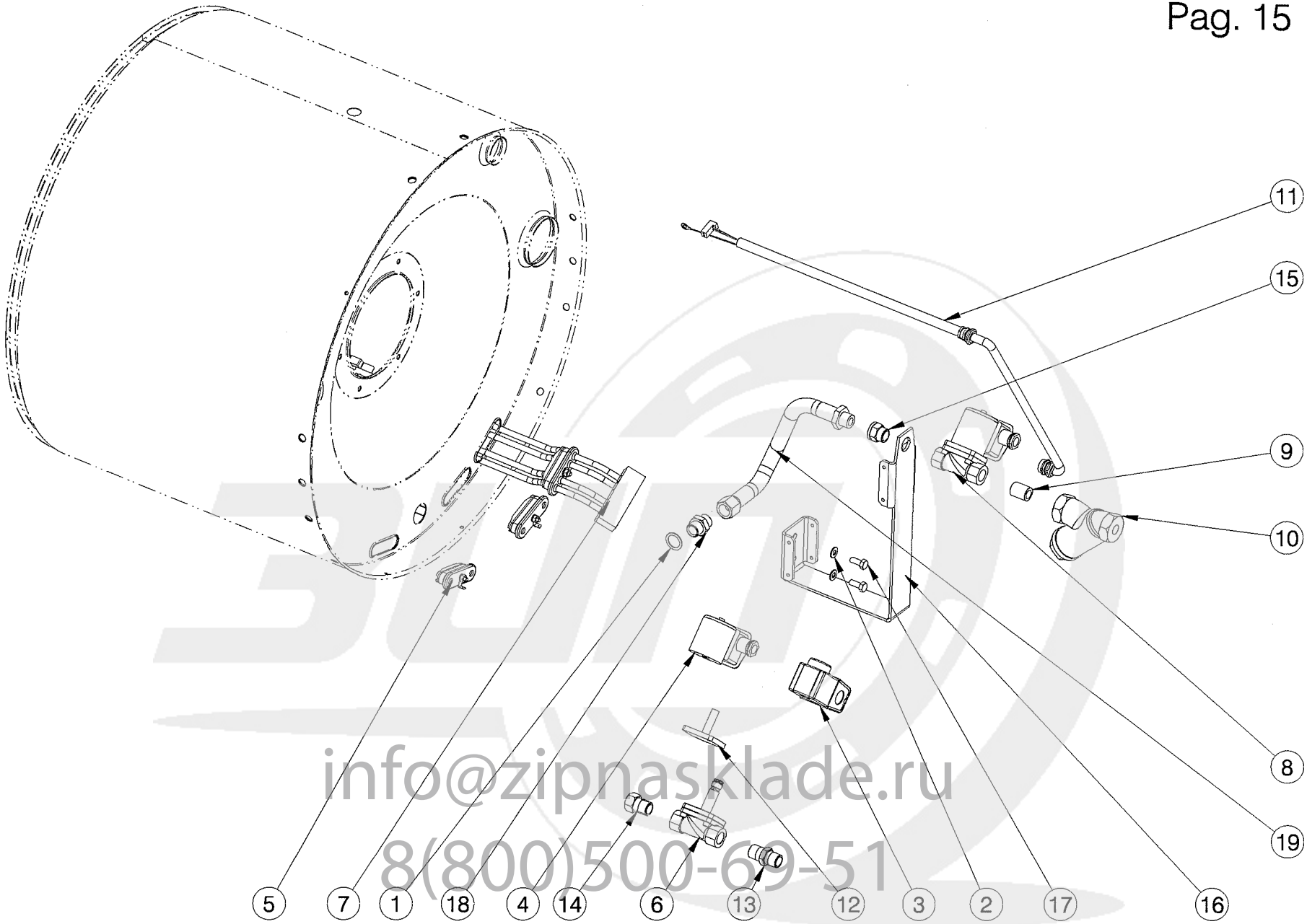


info@zipnasklade.ru
8(800)500-69-51

| Nº | REF | DENOMINATION | DENOMINACIÓN | DENOMINATION |
|---|---|---|---|---|
| | | STEAM HEATING KITS | KITS CALEFACCION VAPOR<br>. | KITS CHAUFFAGE VAPEUR |
| | 796722 | STEAM KIT MS-613-617 50HZ | KIT CAL.VAPOR MS613-617 50 HZ | KIT CHAUF.VAP.MS-613-617 50HZ |
| | 796730 | STEAM KIT MS-613-617 60HZ | KIT CAL.VAPOR MS613-617 60 HZ<br>. | KIT CHAUF.VAP.MS-613-617 60HZ |
| 1 | 109777 | COPPER GASKET 1/2" | 12504 JUNTA COBRE 1/2" | JOINT CUIVRE 1,2" |
| 2 | 149518 | BICR.WASHER B DIN125-ST 8,4 | ARAN.B DIN125-ST B.TRI. 8,4 | RONDELLE.B DIN125-ST BICR.8,4 |
| 3 | 405415 | COIL 240V 60HZ<br>(FOR 60 HZ) | BOBINA 240V.60HZ.<br>(PARA 60 HZ) | BOBINE 240V 60HZ<br>(POUR 60 HZ) |
| 4 | 159806 | COIL 32K7771 220/50<br>(FOR 50 HZ) | BOBINA DANFOSS 32K7771 220/50<br>(PARA 50 HZ) | BOBINE 32K7771 220/50<br>(POUR 50 HZ) |
| 5 | 121962 | HEATER INLET LID<br>(FOR MOD. HOT WATER/STEAM) | CIERRE ENTRADA CALEFACTOR *<br>(PARA MOD.AGUA CALIENTE/VAPOR) | FERMETURE ENTREE RESISTANCE<br>(POUR MOD.EAU CHAUDE/VAPEUR) |
| 6 | 343632 | VALVE BODY EVSIS15NPT032U3072<br>(FOR 60 HZ) | CUERPO VAL.EVSIS15NPT 032U3072<br>(PARA 60 HZ) | CORPS VANNE EVSIS15NPT032U3072<br>(POUR 60 HZ) |
| 7 | 108431 | STEAM DISTRIBUTOR | DISTRIBUIDOR VAPOR | DISTRIBUTEUR VAPEUR |
| 8 | 319558 | ELECTROVALVE 032U3005/84 1/2"<br>(FOR 50 HZ) | ELECT.032U3005/84 1/2" 220/50*<br>(PARA 50 HZ) | ELECTROVANNE 032U3005/84 1/2"<br>(POUR 50 HZ) |
| 9 | 129999 | FIG 531 1/2" GALV | FIGURA 531 DE 1/2" GALV. | FIG 531 1/2" GALV |
| 10 | 133728 | THREADED FILTER 1/2" O'3 PN16 | FILTRO COLAD. ROSC.1/2"0'3PN16 | FILTRE FILETE 1/2" 0,3 PN16 |
| 11 | 341917 | STEAM ELEC.INST. | INST. ELEC. VAPOR | INST.ELEC.VAPEUR |
| 12 | 318063 | SPARE KIT EVSIS 15 032U3172 | KIT REPUES.EVSIS 15 032U3172 | KIT RECHANGE EVSIS 15 032U3172 |
| 13 | 431825 | DOUBLE MALE SLEEVE 1/2"<br>(FOR 60 HZ) | MANGUITO DOBLE MACHO 1/2"<br>(PARA 60 HZ) | MANCHON DOUBLE MALE 1/2"<br>(POUR 60 HZ) |
| 14 | 431809 | MALE-FEMALE SLEEVE<br>(FOR 60 HZ) | MANGUITO MACHO-HEMBRA<br>(PARA 60 HZ) | MANCHON MALE-FEMELLE<br>(POUR 60 HZ) |
| 15 | 183525 | MALE-FEMALE SLEEVE 1/2"<br>(FOR 50 HZ) | MANGUITO MACHO-HEMBRA1/2"LATON<br>(PARA 50 HZ) | FRETTE MALE-FEMELLE 1/2"<br>(POUR 50 HZ) |
| 16 | 433177 | STEAM INLET BRACKET | SOPORTE ENTRADA VAPOR | SUPPORT ENTREE VAPEAUR |
| 17 | 146399 | BICR HEX SCREW DIN933-8 M8X20 | TOR.EX.DIN933-8.8 B.TRI.M 8X20 | VIS HEX DIN933-8.8 BICR.M8X20 |
| 18 | 156216 | JOINTING SCREW 10903 1/2" | 10903 TORNILLO UNION MM1/2" | VIS UNION 10903 1/2" |
| 19 | 344705 | STEAM INLET JOINTING | UNION ENTRADA VAPOR | UNION ENTREE VAPEUR |

info@zipnasklade.ru
8(800)500-69-51

| Nº | REF | DENOMINATION | DENOMINACIÓN | DENOMINATION |
|---|---|---|---|---|
| | | FROM MACHINE Nr: | A PARTIR DE LA MAQUINA No : | A PARTIR DE LA MACHINE NR: |
| | | 2.030.001<br>1.380.001 | 2.030.001<br>1.380.001 | 2.030.001<br>1.380.001 |
| 6 | 343798 | VALVE BODY EVSIS15NPT 032U3692<br>(FOR 60 HZ) | CUERPO VAL.EVSIS15NPT 032U3692<br>(PARA 60 HZ) | CORPS VANN.EVSIS15NPT 032U3692<br>(POUR 60 HZ) |

info@zipnasklade.ru
8(800)500-69-51