NOTES TO USE PARTS LIST

Sheets no. 1, 2, 3, 4 & 12:
Are common for all versions.

Sheets no. 5 & 6:
Relate to SR version.

Sheets no. 7 & 8:
Relate to CR version.

Sheet no. 9:
Relates to CM version.

Sheet no. 10:
Relates to PM version.

Sheet no. 11:
Relates to CM/PM versions.

Sheet no. 13:
Relates to SR/CR versions.

Sheet no. 14:
Relates to CM/PM/SM version.
The bottom just refers to three water inlets machines (PM only).

Sheet no. 15:
Relates to electrical heated machines.

Sheet no. 16:
Relates to steam heated machines.

VERY IMPORTANT:
Before ordering parts be sure they have not been modified. Check it on modification sheet, after the corresponding sheet.

ACLARACIONES PARA EL USO DEL DESPIECE

Las hojas nº 1, 2, 3, 4 y 12:
Son comunes a todas las variantes.

Las hojas nº 5 y 6:
Corresponden a la variante SR.

Las hojas nº 7 y 8:
Corresponden a la variante CR.

La hoja nº 9:
Corresponde a la variante CM.

La hoja nº 10:
Corresponde a la variante PM.

La hoja nº 11:
Corresponde a las variantes CM/PM.

La hoja nº 13:
Corresponde a las variantes SR/CR.

La hoja nº 14:
Corresponde a las variantes **CM/PM/SM. La parte inferior es** sólo para las máquinas con tres entradas de agua (Sólo PM).

La hoja nº 15:
Corresponde a las máquinas con calefacción eléctrica.

La hoja nº 16:
Corresponde a las máquinas con calefacción a vapor.

MUY IMPORTANTE:
Al pedir una pieza cerciorarse antes de que la misma no ha sido modificada. Si lo hubiese sido, estaria situada como hoja de modificaciones, detrás de la hoja correspondiente.

NOTES UTILISATION VUES ECLATEES

Les feuilles no. 1, 2, 3, 4 et 12:
Sont communes à toutes les versions.

Les feuilles no. 5 et 6:
Correspondent à la version SR.

Les feuilles no. 7 et 8:
Correspondent à la version CR.

La feuille no. 9:
Correspond à la version CM.

La feuille no. 10:
Correspond à la version PM.

La feuille no. 11:
Correspond aux versions CM/PM.

La feuille no. 13:
Correspond aux versions SR/CR.

La feuille no. 14:
Correspond aux versions CM/PM/SM.
La partie inférieure est seulement pour les machines à trois arrivées d'eau (Seulement PM).

La feuille no. 15:
Correspond aux machines à chauffage électrique.

La feuille no. 16:
Correspond aux machines à chauffage à vapeur.

TRES IMPORTANT:
Avant de commander une pièce, s'assurer qu'elle n'a pas été modifiée. Le verifier sur feuille de modifications, derrière la feuille correspondante.

info@zipnasklade.ru
8(800)500 60 51

From A partir A partir	To Hasta Jusqu'à
660001	.....

LS - 307

Cod. nº 280511 B

Rev. nº 00/0906

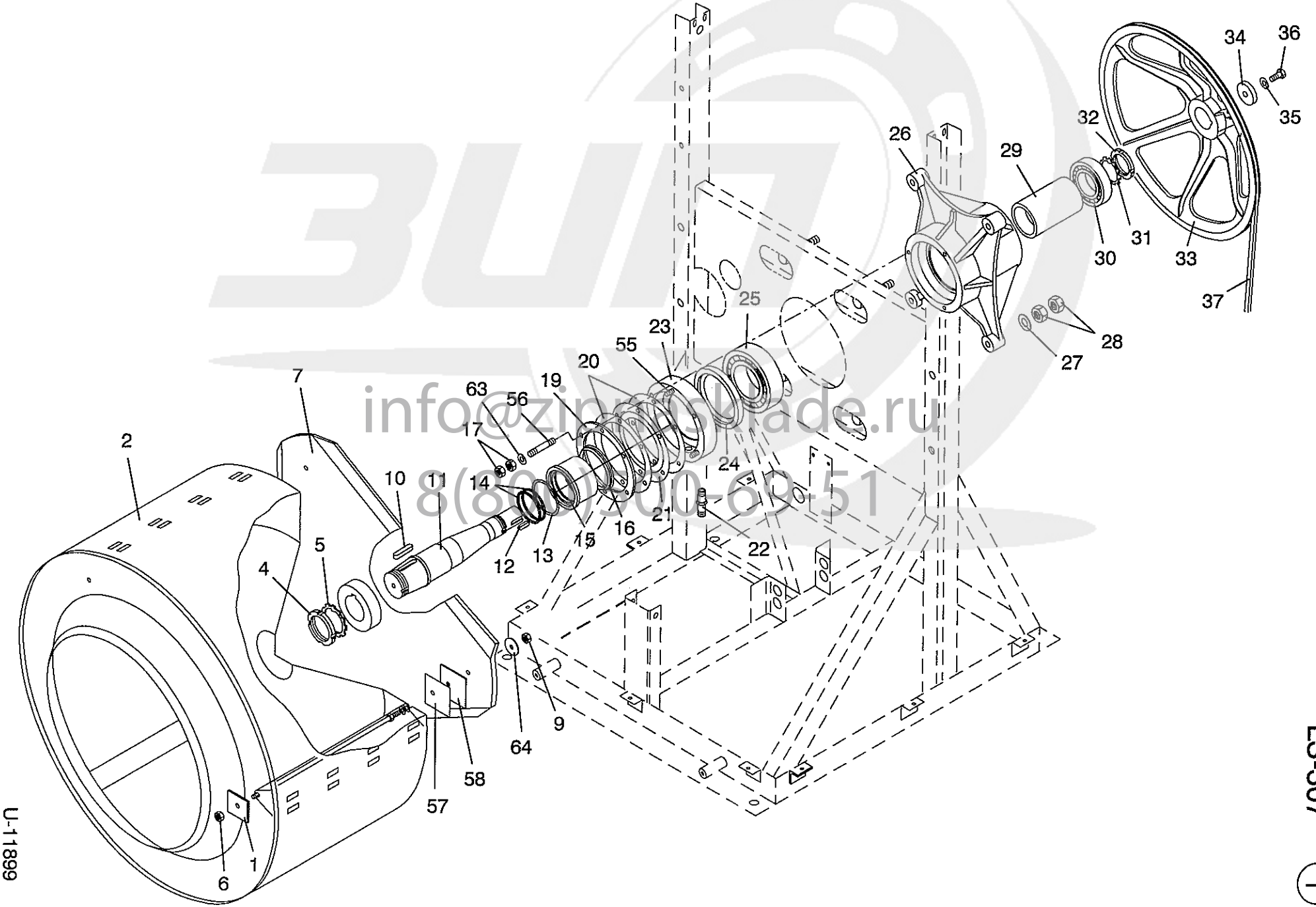

U-11899

LS-307

info@zipmashlade.ru
8(800)300-69-51

Nº	REF.	DENOMINATION	DENOMINACIÓN	DÉNOMINATION
1	158139	BASKET SHOVEL RENFORT	REFUERZO PALA TAMBOR	REFORT PALETTE TAMBOUR
2	157602 *	BASKET BODY	CUERPO TAMBOR	CORPS TAMBOUR
4	131441	FIXING NUT KM-8	TUERCA FIJACION KM- 8 FAG	ECROU FIXATION KM-8
5	122093	BASKET SHAFT WASHER	ARANDELA EJE TAMBOR	RONDELLE PALIER TAMBOUR
6	251322	BASKET STRETCHER NUT	TUERCA TIRANTE TAMBOR	ECROU TIRANT TAMBOUR
7	158154	BASKET COUPLING	ACOPLAMIENTO TAMBOR	ASSAMBLAGE TAMBOUR
8	149302	INOX.A2 WASHER DIN 125 13	ARAN. DIN125 INOX A2 13	RONDELLE INOX.A2 DIN 125 13
9	149948	INOX. HEX. NUT DIN 934 M-12	TUER.EX.DIN934 INOX A2-70 M12	ECROU HEX. INOX. DIN 934 M-12
10	152504	PIN DIN 6885-A 35X12X8	CHAVETA DIN 6885-A 35X12X8	CLAVETTE DIN 6885-A 35X12X8
11	158121	BASKET SHAFT	EJE TAMBOR	PALIER TAMBOUR
12	152082	PIN DIN 6885-AB 35X8X7	CHAVETA DIN 6885-AB 35X8X7	CLAVETTE DIN 6885-AB 35X8X7
13	120949	FLAT GASKET	JUNTA PLANA	JOINT PLAT
14	133975	TORIC GASKET 45X51X3 REF. 3851	JUNTA TORICA 45X51X3 REF 3851	JOINT TORIQUE 45X51X3 REF.3851
15	157776	SEAL RING	ANILLO RETENES	BAGUE RESERVES
16	153478	RING V-RING V- 60 S	ANILLO V-RING V- 60 S NBR510	BAGUE V-RING V- 60 S
17	149971	INOX. HEX. NUT DIN 934 M-6	TUER.EX.DIN934 INOX A2-70 M 6	ECROU HEX. INOX. DIN 934 M-6
19	284299	SEAL COVER PLATE	PLATINA TAPA RETENES	PLAT COUVERCLE RESERVES
20	153353	SEAL COVER GASKET	JUNTA TAPA RETENES	JOINT COUVERCLE RESERVES
21	153361	SEAL LODGING	ALOJAMIENTO RETEN	LOGEMENT RESERVE
22	262857	BEARING BOX DRAIN	DESAGUE CAJA COJINETES	VIDANGE BOITE ROULEMENTS
23	277806	BEARING COVER	TAPA COJINETE	COUVERCLE ROULEMENT
24	133363	SEAL 58X80X 8 BA	RETEN 58X80X 8 BA	RESERVE 58X80X 8 BA
25	128686	BEARING 6309 ZZ	RODAMIENTO 6309-2Z	ROULEMENT 6309 ZZ
26	157743	BEARING CASE	CAJA COJINETES	BOITE ROULEMENTS
27	149393	BICR WASHER B DIN125-ST 15	ARAN.B DIN125-ST B.TRI.15	RONDELLE B BICR DIN125-ST 15
28	150250	BICR HEX.NUT DIN 934-8 M 14	TUER.EX.DIN934-8 B.TRI.M14	ECROU HEX.BICR DIN 934-8 M 14
29	157768	BEARING END PIECE	TOPE COJINETES	ARRET ROULEMENTS
30	128645	BEARING 6306-2RS	RODAMIENTO 6306-2RS1	ROULEMENT 6306-2RS
31	131367	LOCKING WASHER MB-6	ARANDELA CIERRE MB- 6	RONDELLE FERMETURE MB-6
32	131425	FIXING NUT KM-6	TUERCA FIJACION KM- 6	ECROU FIXATION KM-6

info@zipnasklade.ru
8(800)500-69-51

Nº	REF.	DENOMINATION	DENOMINACIÓN	DÉNOMINATION
33	271544	BASKET PULLEY	POLEA TAMBOR	POULIE TAMBOUR
34	215707	BASKET PULLEY WASHER	ARANDELA POLEA TAMBOR	RONDELLE POULIE TAMBOUR
35	149419	BICR.WASHER B DIN125-ST 13	ARAN.B DIN125-ST B.TRI.13	RONDELLE B DIN125-ST BICR.13
36	147025	HEX SCREW 8G DIN 933 M-12X30	TOR.EX.DIN933-8.8 B.TRI.M12X30	VIS HEX. 8G DIN933 M-12X30
37	300228	BELT SPZX-1587	CORREA TRAPECIAL SPZX-1587	COURROIE SPZX-1587
55	277855	BEARING COVER BUMP	ESPARRAGO TAPA COJINETE	GOUJON COUVERCLE ROULEMENT
56	277871	BEARING CASE BUMP	ESPARRAGO CAJA COJINETES	GOUJON BOITE ROULEMENT
57	121459	BASKET CENTERING PIECE	PIEZA CENTRADO TAMBOR	PIECE CENTRAGE TAMBOUR
58	121467	BASKET CENTERING PIECE	PIEZA CENTRADO TAMBOR	PIECE CENTRAGE TAMBOUR
64	289660	WASHER 54X13X3	ARANDELA 54X13X3	RONDELLE 54X13X3

info@zipnasklade.ru
8(800)500-69-51

*	158113	WHOLE BASKET	TAMBOR COMPLETO	TAMBOUR COMPLET

Nº	REF.	DENOMINATION	DENOMINACIÓN	DÉNOMINATION
		FROM MACHINE Nº 660.119	A PARTIR DE LA MÁQUINA Nº 660.119	A PARTIR DE LA MACHINE Nº 660.119
19	204859	SEAL COVER PLATE	PLATINA TAPA RETENES	PLAT COUVERCLE RESERVES
55	161307	BEARING COVER BUMP	ESPARRAGO TAPA COJINETES	GOUJON COUVERCLE ROULEMENT
56	161299	BEARING CASE BUMP	ESPARRAGO CAJA COJINETES	GOUJON BOITE ROULEMENT
63	149310	INOX.A2 WASHER DIN125 6,4	ARAN. DIN125 INOX A2 6,4	RONDELLE INOX.A2 DIN125 6,4

info@zipnasklade.ru
8(800)500-69-51

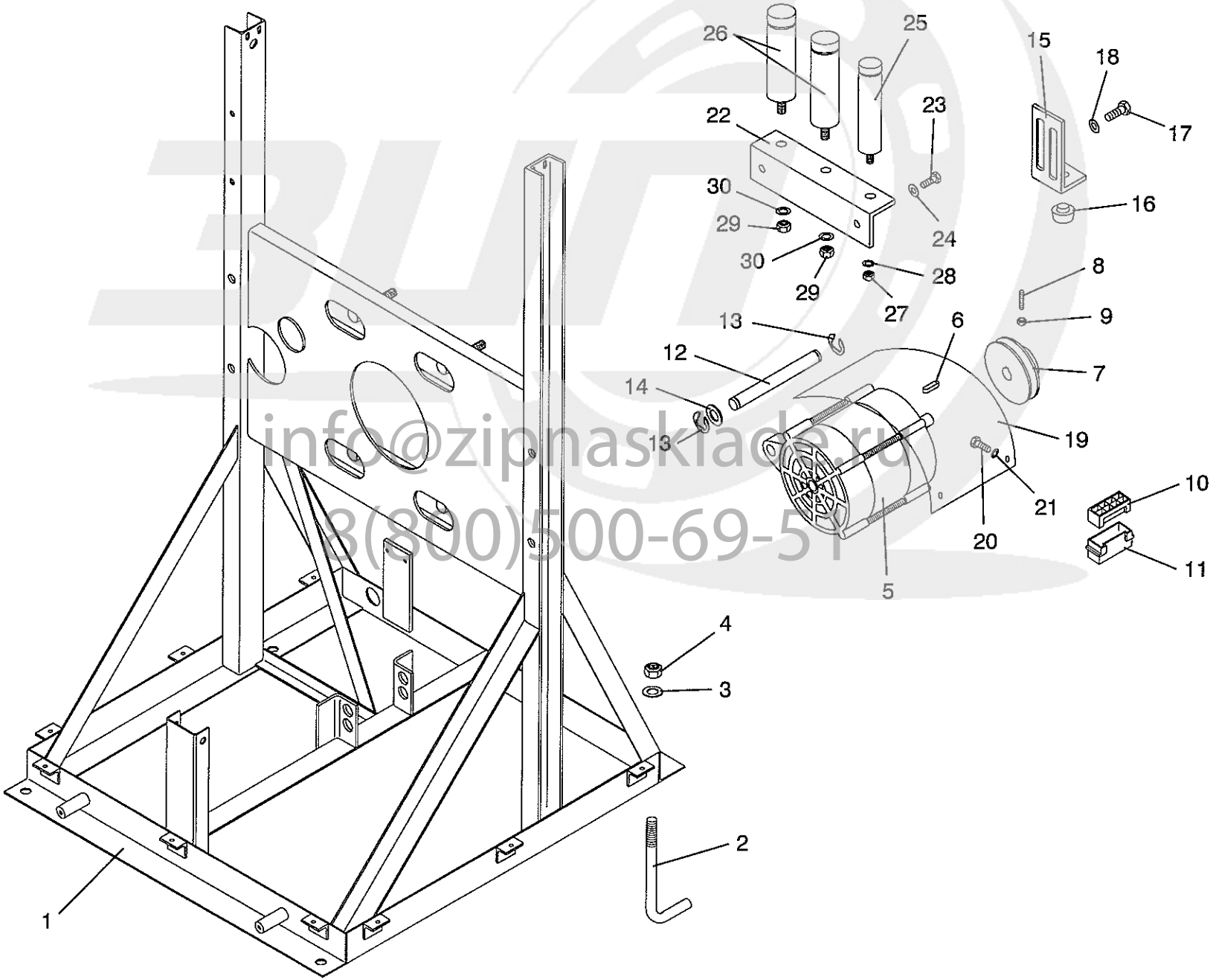

info@zipnasklade.ru
8(800)500-69-51

LS-307 ②

U-11900

Nº	REF.	DENOMINATION	DENOMINACIÓN	DÉNOMINATION
1	276956	CHASSIS	CHASIS	CHASSIS
2	121863	HOLDING-DOWN BUMP (NUT AND WASHER INCLUDES)	ESPARRAGO ANCLAJE (INCLUYE TUERCA Y ARANDELA)	GOUJON SCELLEMENT (ECROU ET RONDELLE COMPRIS)
3	149419	BICR.WASHER B DIN125-ST 13	ARAN.B DIN125-ST B.TRI.13	RONDELLE B DIN125-ST BICR.13
4	150656	SELFBLOCKING NUT DIN985 M-12	TUER.AUTOB.DIN985-8 B.TRI.M12	ECROU AUTOBLOCANT DIN985 M-12
5	302281	MOTOR MT115 60 3PH 200/380-50 (FOR 220/380 V 50HZ) (FOR 440 V 60HZ)	MOTOR MT115 60 III 220/380-50 (PARA 220/380 V 50HZ) (PARA 440 V 60HZ)	MOTEUR MT115 60 3PH 220/380-50 (POUR 220/380 V 50HZ) (POUR 440 V 60HZ)
	302299	MOTOR MT115 60 3PH 240/415-50 (FOR 240/415-440 V 50HZ)	MOTOR MT115 60 III 240/415-50 (PARA 240/415-440 V 50HZ)	MOTEUR MT115 60 3PH 240/415-50 (POUR 240/415-440 V 50HZ)
	302273	MOTOR MT115 60 3PH 208/380-60 (FOR 200V 50HZ) (FOR 220-240/380V 60HZ)	MOTOR MT115 60 III 208/380-60 (PARA 200 V 50HZ) (PARA 220-240/380V 60HZ)	MOTEUR MT115 60 3PH 208/380-60 (POUR 200 V 50HZ) (POUR 220-240/380V 60HZ)
	302307	MOTOR MT115 60 3PH 200/346-60 (FOR 200-208 V 60HZ)	MOTOR MT115 60 III 200/346-60 (PARA 200-208 V 60HZ)	MOTEUR MT115 60 3PH 200/346-60 (POUR 200-208 V 60HZ)
	302257	MOTOR MM115 90 1PH 220-50	MOTOR MM115 90 II 220-50	MOTEUR MM115 90 1PH 220-50
	302265	MOTOR MM115 90 1PH 240-50	MOTOR MM115 90 II 240-50	MOTEUR MM115 90 1PH 240-50
	143875	MOTOR MM115 90 1PH 208-240/60 (FOR 220-240V 60HZ)	MOTOR MM115 90 II 208-240/60 (PARA 220-240V 60HZ)	MOTEUR MM115 90 1PH 208-240/60 (POUR 220-240V 60HZ)
	128579	BEARING 6204 ZZ QE6	RODAMIENTO 6204-2Z	ROULEMENT 6204 ZZ QE6
6	303388	PIN DIN 6885-A 35X 6X6	CHAVETA DIN 6885-A 35X 6X6	CLAVETTE DIN 6885-A 35X 6X6
7	276147	MOTOR PULLEY (FOR 50HZ)	POLEA MOTOR (PARA 50 HZ)	POULIE MOTEUR (POUR 50 HZ)
	276170	MOTOR PULLEY (FOR 60HZ)	POLEA MOTOR (PARA 60 HZ)	POULIE MOTEUR (POUR 60 HZ)
8	144139	ALLEN BUMP DIN 913 M-6X25	ESP.ALL.DIN913-10.9 M 6X25	GOUJON ALLEN DIN 913 M-6X25
9	150227	BICR HEX NUT DIN934-8 M6	TUER.EX.DIN934-8 B.TRI.M 6	ECROU HEX DIN934-8 BICR.M6
10	139261	PLUG 163007	CONECTOR 163007	CONNECTEUR 163007
11	139279	PLUG 280430	CONECTOR 280430	CONNECTEUR 280430
12	157909	MOTOR BRACKET SHAFT	EJE SOPORTE MOTOR	AXE SUPPORT MOTEUR
13	132555	SAFETY WASHER 15 DIN 6799	ARANDELA SEGURIDAD 15 DIN 6799	RONDELLE SECURITE 15 DIN 6799
14	263434	WASHER 32X21X0,8	ARANDELA 32X21X0,8	RONDELLE 32X21X0,8
15	251801	MOTOR TEIGHTENER	TENSOR MOTOR	TENDEUR MOTEUR
16	135186	END PIECE	TOPE TENSOR	ARRET

info@zipnasklade.ru
8(800)500-69-51

Nº	REF.	DENOMINATION	DENOMINACIÓN	DÉNOMINATION
17	146399	BICR HEX SCREW DIN933-8 M8X20	TOR.EX.DIN933-8.8 B.TRI.M 8X20	VIS HEX DIN933-8.8 BICR.M8X20
18	149518	BICR.WASHER B DIN125-ST 8,4	ARAN.B DIN125-ST B.TRI. 8,4	RONDELLE.B DIN125-ST BICR.8,4
19	266346	MOTOR PROTECTION	PROTECCION MOTOR	PROTECTION MOTEUR
20	146233	BICR.HEX SCREW DIN933-8 M6X15	TOR.EX.DIN933-8.8 B.TRI.M 6X15	VIS HEX DIN933-8.8 BICR.M6X15
21	264747	WASHER 25X6,5X4	ARANDELA 25X6,5X4	RONDELLE 25X6,5X4
22	282863	CAPACITOR BRACKET	SOPORTE CONDENSADORES	SUPPORT CONDENSATEURS
23	165621	BIC HEX SCREW DIN933-8,8 M6X10	TOR.EX.DIN933-8.8 B.TRI.M 6X10	VIS HEX DIN933-8,8 BICR M6X10
24	149526	BICR.WASHER B DIN125-ST 6,4	ARAN.B DIN125-ST B.TRI. 6,4	RONDELLE B DIN125-ST BICR.6,4
25	120097	CAPACITOR 30MF 450V (FOR 60HZ AND 220V,50HZ)	CONDENSADOR 30MF 450V.F.DOBLE (PARA 60HZ Y 220V 50HZ)	CONDENSATEUR 30MF 450V (POUR 60HZ ET 220V 50HZ)
	123653	CAPACITOR 25MF 450V (FOR 240V 50HZ)	CONDENSADOR 25MF 450V.F.DOBLE (PARA 240V 50HZ)	CONDENSATEUR 25MF 450V (POUR 240V 50HZ)
26	134908	CAPACITOR 40MF 450V (FOR 60HZ AND 220V,50HZ)	CONDENSADOR 40MF 450V.F.DOBLE (PARA 60HZ Y 220V 50HZ)	CONDENSATEUR 40MF 450V (POUR 60HZ ET 220V 50HZ)
	123661	CAPACITOR 35MF 450V (FOR 240V 50HZ)	CONDENSADOR 35MF 450V.F.DOBLE (PARA 240V 50HZ)	CONDENSATEUR 35MF 450V (POUR 240V 50HZ)
27	150201	BICR.HEX NUT DIN 934-8 M-8	TUER.EX.DIN934-8 B.TRI.M 8	ECROU HEX.DIN 934-8 BICR.M-8
28	149518	BICR.WASHER B DIN125-ST 8,4	ARAN.B DIN125-ST B.TRI. 8,4	RONDELLE.B DIN125-ST BICR.8,4
29	150235	BICR.HEX NUT DIN 934-8 M-12	TUER.EX.DIN934-8 B.TRI.M12	ECROU HEX DIN 934-8 BICR.M-12
30	149419	BICR.WASHER B DIN125-ST 13	ARAN.B DIN125-ST B.TRI.13	RONDELLE B DIN125-ST BICR.13

info@zipnaskiade.ru
8(800)500-69-51

Nº	REF.	DENOMINATION	DENOMINACIÓN	DÉNOMINATION
		FROM MACHINE Nº 660.304	A PARTIR DE LA MÁQUINA Nº 660.304	A PARTIR DE LA MACHINE Nº 660.304
1	287805	CHASSIS	CHASIS	CHASSIS

info@zipnasklade.ru
8(800)500-69-51

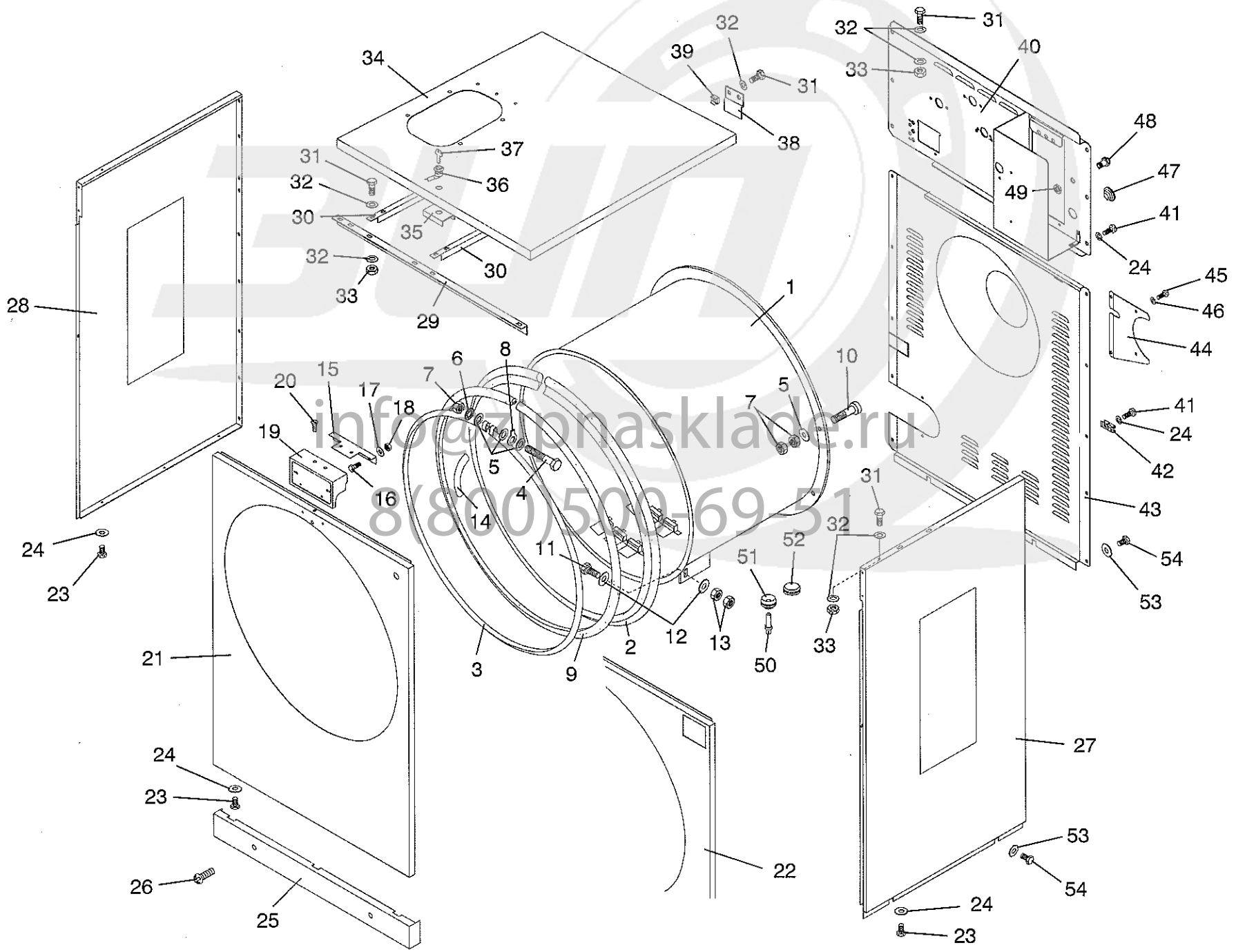

info@zipnasklade.ru
8(800)509-69-51

U-11901

LS-307 3

Nº	REF.	DENOMINATION	DENOMINACIÓN	DÉNOMINATION
1	271627	OUTER DRUM	ENVOLVENTE	CUVE
2	158634 &	NEOPRENE I PROFILE L.1860 MM	PERFIL I LONGITUD 1860MM ZZ	PROFILE NEOPRENE I L.1860 MM
3	158261	OUTER DRUM FIXING RING	ARO FIJACION ENVOLVENTE	BAGUE FIXATION CUVE
4	146464	BICR.HEX SCREW DIN933-8 M8X100	TOR.EX.DIN933-8.8 B.TRI.M8X100	VIS HEX BICR.DIN933-8 M 8X100
5	149518	BICR.WASHER B DIN125-ST 8,4	ARAN.B DIN125-ST B.TRI. 8,4	RONDELLE.B DIN125-ST BICR.8,4
6	149708	BICR.EXT.TOOT.WASH.DIN6798 M8	ARAN.DEN.EXT.B.TRI.DIN6798M 8	RONDEL.DEN.EX.BICR.DIN6798 M8
7	150367	HEX NUT CLASS 10 DIN 934 M-8	TUERCA (150201)	ECROU HEX CLASS 10 DIN 934 M-8
8	280842	EARTH INTAKE	TOMA DE TIERRA	PRISE TERRE
9	159699 @	E PROFILE L.1840 MM	PERFIL E LONGITUD 1840MM ZZ	PROFILE E L.1840 MM
10	144402	ALLEN SCREW DIN 912 M-8X30	TOR.ALLDIN912-8.8 B.TRI.M 8X30	VIS ALLEN DIN 912 M-8X30
11	146506	8G HEX.SCREW DIN 933 M-10X30	TOR.EX.DIN933-8.8 B.TRI.M10X30	VIS HEX. 8G DIN 933 M-10X30
12	149500	BICR.WASHER B DIN125-ST 10,5	ARAN.B DIN125-ST B.TRI.10,5	RONDELLE B DIN125-ST BICR.10,5
13	184267	HEX NUT 8G DIN934 M-10	TUERCA (150193)	ECROU HEX 8G DIN934 M-10
14	205419	WIRING PROTECTOR	PROTECTOR CABLES	PROTECTEUR CABLES
15	276329	LABEL ASSEMBLY BRACKET	APOYO SOPORTE PLACA	APPUI SUPPORT PLAQUE
16	144881	INOX HEX SCREW DIN933 M 6X16	TOR.EX.DIN933INOX A2-70 M 6X16	VIS HEX INOX DIN933 M 6X16
17	149310	INOX.A2 WASHER DIN125 6,4	ARAN. DIN125 INOX A2 6,4	RONDELLE INOX.A2 DIN125 6,4
18	149971	INOX. HEX. NUT DIN 934 M-6	TUER.EX.DIN934 INOX A2-70 M 6	ECROU HEX. INOX. DIN 934 M-6
19	300434	LABEL BRACKET	SOPORTE PLACA	SUPPORT PLAQUE
20	169060	INOX SCREW DIN 964 M-4X8	TOR.G.SEBO INOX DIN964 M 4X8	VIS T/GOUT.DE SUIF INOX DIN964
21	281907	FRONT COVER (RED PAINTED WITH MODEL)	TAPA FRONTAL ROJO S-P-C(SIM) (PINTADA ROJA CON MODELO)	COUVERCLE FRONTAL (PEINTE ROUGE AVEC MODELE)
	281881	FRONT COVER (RED PAINTED WITHOUT MODEL)	TAPA FRONTAL (PINTADA ROJA SIN MODELO)	COUVERCLE FRONTAL (PEINTE ROUGE SANS MODELE)
	281915	FRONT COVER (GREY PAINTED WITH MODEL)	TAPA FRONTAL GRIS S-P-C(SIM) (PINTADA GRIS CON MODELO)	COUVERCLE FRONTAL (PEINTE GRIS AVEC MODELE)
	281899	FRONT COVER (GREY PAINTED WITHOUT MODEL)	TAPA FRONTAL (PINTADA GRIS SIN MODELO)	COUVERCLE FRONTAL (PEINTE GRIS SANS MODELE)
	272237	FRONT COVER (INOX)	TAPA FRONTAL INOX S-P-C(SIM) (INOX)	COUVERCLE FRONTAL (INOX)
22	281949	FRONT COVER (RED PAINTED WITH MODEL)	TAPA FRONTAL ROJO C(COM) (PINTADA ROJA CON MODELO)	COUVERCLE FRONTAL (PEINTE ROUGE AVEC MODELE)

info@zipnasklade.ru
8(800)500-69-51

Nº	REF.	DENOMINATION	DENOMINACIÓN	DÉNOMINATION
	281923	FRONT COVER (RED PAINTED WITHOUT MODEL)	TAPA FRONTAL (PINTADA ROJA SIN MODELO)	COUVERCLE FRONTAL (PEINTE ROUGE SANS MODELE)
	281956	FRONT COVER (GREY PAINTED WITH MODEL)	TAPA FRONTAL GRIS C(COM) (PINTADA GRIS CON MODELO)	COUVERCLE FRONTAL (PEINTE GRIS AVEC MODELE)
	281931	FRONT COVER (GREY PAINTED WITHOUT MODEL)	TAPA FRONTAL (PINTADA GRIS SIN MODELO)	COVERCLE FRONTAL (PEINTE GRIS SANS MODELE)
	272328	FRONT COVER (INOX)	TAPA FRONTAL INOX C(COM) (INOX)	COUVERCLE FRONTAL (INOX)
23	146274	BICR.HEX SCREW DIN933-8 M-5X10	TOR.EX.DIN933-8.8 B.TRI.M 5X10	VIS HEX.BICR.DIN933-8.8 M-5X10
24	149534	BICR.WASHER B DIN125-ST 5,3	ARAN.B DIN125-ST B.TRI. 5,3	RONDELLE B BICR.DIN125-ST 5,3
25	279778	FRONT SOCKET	ZOCALO FRONTAL	SOCLE FRONTAL
26	129932	SCREW DIN 7985 M-6X10	TOR.AL.DIN7985 INOX.PAV.M6X10	VIS DIN 7985 M-6X10
27	272773	RIGHT SIDE PANEL (PAINTED)	TAPA LATERAL DERECHA (PINTADA)	COUVERCLE LATERAL DROIT (PEINT)
	281493	RIGHT SIDE PANEL (INOX)	TAPA LATERAL DERECHA (INOX)	COUVERCLE LATERAL DROIT (INOX)
28	275677	LEFT SIDE PANEL (PAINTED)	TAPA LATERAL IZQUIERDA (PINTADA)	COUVERCLE LATERAL GAUCHE (PEINT)
	281535	LEFT SIDE PANEL (INOX)	TAPA LATERAL IZQUIERDA (INOX)	COUVERCLE LATERAL GAUCHE (INOX)
29	276576	CROSS ANGLE	ANGULO TRANSVERSAL	ANGLE TRANSVERSAL
30	276584	LANE ANGLE	ANGULO LONGITUDINAL	ANGLE LONGITUDINAL
31	146233	BICR.HEX SCREW DIN933-8 M6X15	TOR.EX.DIN933-8.8 B.TRI.M 6X15	VIS HEX DIN933-8.8 BICR.M6X15
32	149526	BICR.WASHER B DIN125-ST 6,4	ARAN.B DIN125-ST B.TRI. 6,4	RONDELLE B DIN125-ST BICR.6,4
33	150227	BICR HEX NUT DIN934-8 M6	TUER.EX.DIN934-8 B.TRI.M 6	ECROU HEX DIN934-8 BICR.M6
34	276345	UPPER COVER	TAPA SUPERIOR	COUVERCLE SUPERIEUR
35	242115	UPPER COVER RENFORT	REFUERZO TAPA SUPERIOR	REFORT COUVERCLE SUPERIEUR
36	196915	LOCK RE.20.00.02.05 (KEYS INCLUDED)	CERRADURA REF.20.00.02.05 (INCLUYE LLAVES)	FERMETURE REF.20.00.02.05 (CLES COMPRISES)
37	196923	LOCK KEY RE.10.41.213	LLAVE REF.10.41.213 COMB.T-205	CLE FERMETURE REF.10.41.213
38	261354	TOP COVER HINGE	BISAGRA TAPA SUPERIOR	CHARNIERE COUVERCLE SUPERIEUR
39	165019	CAGED NUT M-6 0,5-1,5	TUER.ENJ.M6 0,5-1,5 R.310007-9	ECROU PRESIONER M-6 0,5-1,5
40	276790	REAR PANEL	PANEL POSTERIOR	PANNEAU POSTERIEUR
41	149153	PLATE SCREW ST-4 80 C/AL.T25	TOR.CHAPA ST-4 80 C/AL.T25	VIS PLAQUE ST-4 80 C/AL.T25

info@zipnasklade.ru
8(800)500-69-51

Nº	REF.	DENOMINATION	DENOMINACIÓN	DÉNOMINATION
42	135228	NUT NUL 506-2A REF. 213048-1	TUERCA SEG.NUL 506-2B 213048-1	ECROU NUL 506-2A REF. 213048-1
43	275735	REAR COVER	TAPA POSTERIOR	COUVERCLE POSTERIEUR
44	275743	COVER	TAPETA TAPA POSTERIOR	COUVERCLE
45	166645	CYL.PLATE SCREW DIN7971 8X5/8"	TOR.CHAPA CILI.DIN7971 8X5/8"	VIS PLAQUE CIL.DIN7971 8X5/8"
46	149476	BICR.WASHER B DIN125-ST 4,3	ARAN.B DIN125-ST B.TRI. 4,3	RONDELLE B DIN125-ST BICR.4,3
47	139683	CONE ECPC-6	CONO HIMEL ECPC-6	CONE ECPC-6
48	140103	STUFFING-BOX PG-11	PRENSAES.NORMADIX 601104 PG-11	PRESSE-ETOUPES PG-11
49	140236	COUNTERNUT PG-11	TUERCA PG 281104 PG-11	CONTREECROU PG-11
50	193862	NTC RESISTANCE 2381 640 90042 (FOR CM) (FOR PM)	RESISTENCIA NTC 2381 640 90042 (PARA CM) (PARA PM)	RESISTANCE NTC 2381 640 90042 (POUR..CM) (POUR PM)
51	256149	SENSOR SHEATH LODGING (FOR CM) (FOR PM)	PASAMUROS SENSOR (PARA CM) (PARA PM)	LOGEMENT SENSEUR (POUR..CM) (POUR PM)
52	160101	THERMOSTAT INTAKE STOPPER (FOR CR HEATING WITHOUT)	TAPON TOMA TERMOSTATO (PARA CR SIN CALEFACCION)	BOUCHON PRISE THERMOSTAT (POUR CR SENS CHAUFAGE)
&	131995	1 METER EPDM I PROFILE	1 METRO PERFIL I EPDM	1 METRE PROFILE I EPDM
@	131938	1 METER EPDM E PROFILE	1 METRO PERFIL E EPDM	1 METRE PROFILE E EPDM

info@zipnasklade.ru
8(800)500-69-51

Nº	REF.	DENOMINATION	DENOMINACIÓN	DÉNOMINATION
		FROM MACHINE Nº 660.088	A PARTIR DE LA MÁQUINA Nº 660.088	A PARTIR DE LA MACHINE Nº 660.088
1	284786	OUTER-DRUM	ENVOLVENTE	CUVE

info@zipnasklade.ru
8(800)500-69-51

Nº	REF.	DENOMINATION	DENOMINACIÓN	DÉNOMINATION
		FROM MACHINE Nº 660.304	A PARTIR DE LA MÁQUINA Nº 660.304	A PARTIR DE LA MACHINE Nº 660.304
27	287839	RIGHT SIDE PANEL (INOX)	TAPA LATERAL DERECHA (INOX)	COUVERCLE LATERAL DROIT (INOX)
	287813	RIGHT SIDE PANEL (PAINTED)	TAPA LATERAL DERECHA (PINTADA)	COUVERCLE LATERAL DROIT (PEINT)
28	287847	LEFT SIDE PANEL (INOX)	TAPA LATERAL IZQUIERDA (INOX)	COUVERCLE LATERAL GAUCHE (INOX)
	287821	LEFT SIDE PANEL (PAINTED)	TAPA LATERAL IZQUIERDA (PINTADA)	COUVERCLE LATERAL GAUCHE (PEINT)
43	289843	REAR COVER	TAPA POSTERIOR	COUVERCLE POSTERIEUR
53	122259	WASHER 20X6X1,5	ARANDELA 20X6X1,5	RONDELLE 20X6X1,5
54	328237	SCREW T25 AR.18ESTR. M5X15	TOR.ALOM.T20 AR.18ESTR.M 5X15	VIS T25 AR.18ESTR. M5X15

info@zipnasklade.ru
8(800)500-69-51

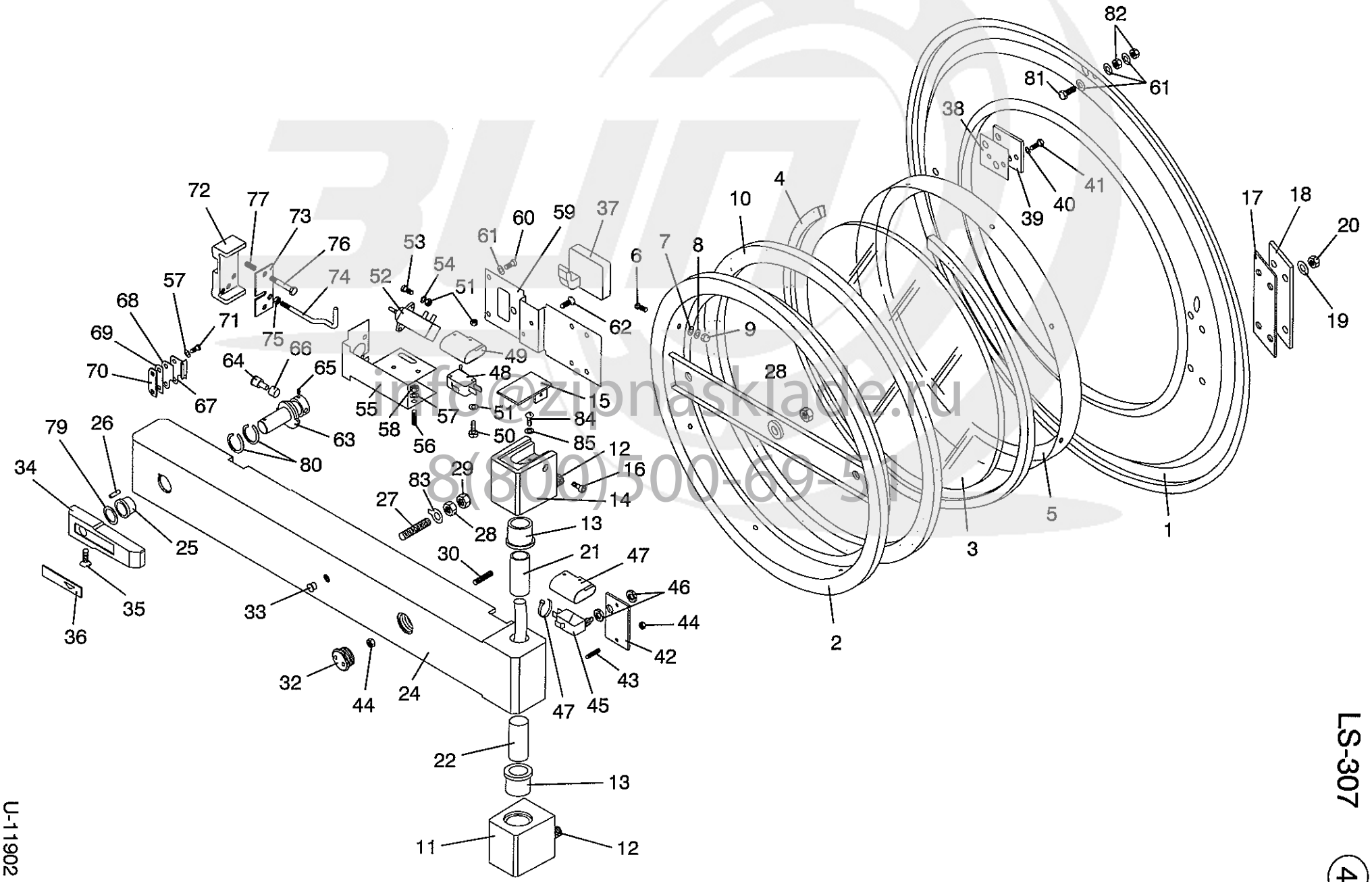

info@zipnasklade.ru
8(800)500-69-51

LS-307

4

U-11902

Nº	REF.	DENOMINATION	DENOMINACIÓN	DÉNOMINATION
1	280941 +	OUTER DRUM FRONT PANEL	FRONTAL ENVOLVENTE	FRONTAL CUVE
2	254912 *	DOOR INNER RING	ARO INTERIOR ESCOTILLA	BAGUE INTERIEUR HUBLOT
3	134346	GLASS SPYHOLE 320,5X5	MIRILLA CRISTAL D320,5+-1,5X5	VITRE 320,5X5
4	131896	NEOPRENE A PROFILE L.1060 MM	PERFIL A EPDM BLANCO 1060MM.	PROFILE NEOPRENE A L.1060 MM
5	246009	OUTER RING	ARO EXTERIOR	BAGUE EXTERIEUR
6	145664	INOX FLAT SCREW DIN85 M 4X8	TOR.PLA.DIN85 INOX A2-70 M4X 8	VIS PLAT INOX DIN85 M 4X8
7	116129	SCREW GASKET	JUNTA TORNILLO	JOINT VIS
8	149328	INOX A2 WASHER DIN 125 4,3	ARAN. DIN125 INOX A2 4,3	RONDELLE INOX A2 DIN 125 4,3
9	150151	INOX BLIND NUT DIN 1587 M-4	TUERCA CIE.INOX LAR.DIN1587M 4	ECROU AVEUGLE INOX DIN 1587 M4
10	182659	DOOR GASKET	JUNTA ESCOTILLA	JOINT HUBLOT
11	272989	HINGE (INCLUDING BUMPS AND SLEEVE)	CHARNELA (INCLUYE ESPARRAGO Y COJINETE)	CHARNIÉRE (COMPRIS GOUJONS ET FRETTE)
12	275685	HINGE BUMP	ESPARRAGO CHARNELA	GOUJON CHARNIERE
13	155515	SELFOIL SLEEVE B11B18-25-30/32	COJ. SELFOIL B11B18-25-30/32-4	FRETTE SELFOIL B11B18-25-30/32
14	272971	HINGE (INCLUDING BUMPS AND SLEEVE)	CHARNELA (INCLUYE ESPARRAGO Y COJINETE)	CHARNIÉRE (COMPRIS GOUJONS ET FRETTE)
15	272997	HINGE COVER	TAPA CHARNELA	COUVERCLE CHARNIÉRE
16	161646	ALLEN SCREW DIN 912 M-4X8	TOR.ALLDIN912-8.8 B.TRI.M 4X 8	VIS ALLEN DIN 912 M-4X8
17	161448	HINGE BRACKET GASKET	JUNTA SOPORTE CHARNELA	JOINT SUPPORT CHARNIERE
18	272500	HINGE BRACKET	SOPORTE CHARNELA	SUPPORT CHARNIÉRE
19	149351	INOX A2 WASHER DIN 125 8,4	ARAN. DIN125 INOX A2 8,4	RONDELLE INOX A2 DIN 125 8,4
20	149963	INOX HEX NUT DIN 934 M-8	TUER.EX.DIN934 INOX A2-70 M 8	ECROU HEX. INOX DIN 934 M-8
21	272732	UPPER SEMI-SHAFT	SEMI-EJE SUPERIOR	SEMI-AXE SUPERIEUR
22	272518	LOWER SEMI-SHAFT	SEMI-EJE INFERIOR	SEMI-AXE INFERIEUR
23	205419	WIRING PROTECTOR	PROTECTOR CABLES	PROTECTEUR CABLES
24	276683	DOOR BRACKET	SOPORTE ESCOTILLA	SUPPORT HUBLOT
25	128827	SELFOIL SLEEVE B11B12-17-15/22	COJ. SELFOIL B11B12-17-15/22-3	FRETTE SELFOIL B11B12-17-15/22
26	150771	FLEXIBLE PIN DIN1481 D4X15	PASADOR ELASTICO DIN1481 D4X15	GOUJON ELASTIQUE DIN1481 D4X15
27	280826	DOOR REGULATION BOLT	PERNO REGULACION ESCOTILLA	BOULON REGLAGE HUBLOT
28	149955	INOX HEX NUT DIN 934 M-10	TUER.EX.DIN934 INOX A2-70 M10	ECROU HEXAG. INOX DIN 934 M-10
29	150649	SELFBLOCKING NUT DIN 985 M-10	TUER.AUTOB.DIN985-8 B.TRI.M10	ECROU AUTOBLOCANT DIN 985 M-10

info@zipnasklade.ru
8(800)500-69-51

Nº	REF.	DENOMINATION	DENOMINACIÓN	DÉNOMINATION
30	161638	ALLEN BUMP DIN 913 M-6X45	ESP.ALL.DIN913-10.9 M 6X45	GOUJON ALLEN DIN 913 M-6X45
32	205583	DOOR BRACKET PLUG	TAPON SOPORTE ESCOTILLA	BOUCHON SUPPORT HUBLOT
33	301861	CONICAL END-PIECE FIG.26 D10	TOPE CONICO FIG.26 D10	ARRET CONIQUE FIG 26 D10
34	273144	HANDLE	MANECILLA	MANETTE
35	147694	INOX SCREW DIN7991M 5X25	TOR.AV.ALL.INOX DIN7991M 5X 25	VIS INOX DIN7991M 5X25
36	304113	HANDLE PLATE	PLACA MANECILLA	PLAQUE MANETTE
37	128090	LOCKING PIECE	PIEZA CIERRE	PIECE FERMETURE
38	128835	FIXING BASE GASKET	JUNTA BASE FIJACION	JOINT BASE FIXATION
39	201681	FIXING BASE	BASE FIJACION	BASE FIXATION
40	149310	INOX.A2 WASHER DIN125 6,4	ARAN. DIN125 INOX A2 6,4	RONDELLE INOX.A2 DIN125 6,4
41	144923	INOX HEX.SCREW DIN 933 M-6X20	TOR.EX.DIN933INOX A2-70 M 6X20	VIS HEX INOX DIN 933 M-6X20
42	274340	DOOR BRACKET COVER	TAPA SOPORTE ESCOTILLA	COUVERCLE SUPPORT HUBLOT
43	144113	ALLEN BUMP DIN 916 M-6X20	ESP.ALL.DIN916-10.9 M 6X20	GOUJON ALLEN DIN 916 M-6X20
44	150227	BICR HEX NUT DIN934-8 M6	TUER.EX.DIN934-8 B.TRI.M 6	ECROU HEX DIN934-8 BICR.M6
45	196782	MICROSWITCH 83161,344 IW3+161L	MINIRRUPTOR 83161.344 IW3+161L	MINIRRUPTEUR 83161.344 IW3+161
46	272757	MICROSWITCH NUT	TUERCA MICRORRUPTOR	ECROU MICRORRUPTEUR
47	140434	CLAMP 2221	BRIDA UNEX 2221	BRIDE 2221
48	279760	MICROSWITCH	MINIRRUPTOR	MICRORRUPTEUR
49	281113	MICROSWITCH ISOLATION	AISLANTE MICRORRUPTOR	ISOLANT MICRORRUPTEUR
50	198127	ZINC HEX SCREW DIN933 M 3X16	TOR.EX.DIN933-4.8 B.TRI.M 3X16	VIS HEX ZINC DIN933 M 3X16
51	149906	INOX. HEX. NUT DIN 934 M-3	TUER.EX.DIN934 INOX A2-70 M 3	ECROU HEX. INOX DIN934 M-3
52	196774	THERMO-ACTUATOR 100331 15	TERMOACTUADOR 100331.15 NTA 6	THERMO-ACTIONNEMENT 100331 15
53	146035	BICR CYL SCREW DIN84 M-3X10	TOR.CIL.DIN84-4.8 B.TRI.M 3X10	VIS CYL BICR DIN84-4.8 M 3X10
54	152132	INOX A2 WASHER DIN 125	ARAN. DIN125 INOX A2 3,2	RONDELLE INOX A2 DIN 125 3,2
55	272617	THERMO-ACTUATOR BRACKET	SOPORTE TERMOACTUADOR	SUPPORT THERMO-ACTIONNEMENT
56	144048	ALLEN BUMP DIN 913 M 5 X 20	ESP.ALL.DIN913-10.9 M 5X20	GOUJON ALLEN DIN 913 M 5X20
57	149534	BICR.WASHER B DIN125-ST 5,3	ARAN.B DIN125-ST B.TRI. 5,3	RONDELLE B BICR.DIN125-ST 5,3
58	150177	BICR HEX NUT DIN934-8 M5	TUER.EX.DIN934-8 B.TRI.M 5	ECROU HEX DIN934-8 BIC.M5
59	284182	SAFETY LOCK COVER	TAPA CIERRE SEGURIDAD	COUVERCLE FERMETURE SECURITE
60	145656	INOX FLAT SCREW DIN 85 M 5X10	TOR.PLA.DIN85 INOX A2-70 M5X10	VIS PLAT INOX DIN 85 M 5X10 A2

info@zipnasklade.ru
8(800)500-69-51

Nº	REF.	DENOMINATION	DENOMINACIÓN	DÉNOMINATION
61	149369	INOX A2 WASHER DIN 125 5,3	ARAN. DIN125 INOX A2 5,3	RONDELLE INOX A2 DIN 125 5,3
62	144865	INOX SCREW DIN963 M 5X10 A2-70	TOR.AV.DIN963 INOX A2-70 M5X10	VIS INOX DIN963 M 5X10 A2-70
63	272609	LOCKING BOLT	BULON DE CIERRE	BOULON DE FERMETURE
64	255109	BOLT PIN	PASADOR BULON	GOUJON BOULON
65	184176	ALLEN BUMP DIN916 M5X6	ESP.ALL.DIN916-10.9 M 5X 6	GOUJON ALLEN DIN916 M5X6
66	128033	SELFOIL SLEEVE B11A 8-12-12	COJ. SELFOIL B11A 8-12-12	FRETTE SELFOIL B11A 8-12-12
67	184192	ANTIBLOCKING SPRING	MUELLE ANTIBLOQUEO	RESSORT ANTIBLOCAGE
68	183947	AUXILIARY SPRING	MUELLE AUXILIAR	RESSORT AUXILIAIRE
69	256206	SPRING SUPPLEMENT	SUPLEMENTO MUELLE	SUPPLEMENT RESSORT
70	256172	SPRING SEPARATOR	SEPARADOR MUELLE	SEPARATEUR RESSORT
71	144279	ALLEN SCREW DIN 912 M-5X15	TOR.ALLDIN912-8.8 B.TRI.M 5X15	VIS ALLEN DIN 912 M-5X15
72	272575	SLIDING BLOCKER	BLOQUEADOR DESLIZANTE	BLOQUEUR COULISSANT
73	272583	SLIDING BLOCKING PIECE	PIEZA BLOQUEADOR DESLIZANTE	PIECE BLOCKAGE GLISSANT
74	272591	MICROSWITCH DRIVE	ACCIONADOR MICRORRUPTOR	ACIONNEMENT MICRORRUPTEUR
75	149922	INOX HEX. NUT DIN 934 M-4	TUER.EX.DIN934 INOX A2-70 M 4	ECROU HEX. INOX DIN 934 M-4
76	278622	SLIDING BLOCKING SCREW	TORNILLO BLOQUEADOR DESLIZANTE	VIS BLOQUEUR COULISSANT
77	198069	SPRING	MUELLE COMPENSADOR	RESSORT
79	184200	ADJ. WASHER PS12X18X0,2	ARAN.AJUSTE PS12X18X0,2 DIN988	RONDELLE REGLAGE PS12X18X0,2
80	183566	RING SEEGER SW-18	ANILLO ELASTICO SEEGER SW-18	BAGUE SEEGER SW-18
81	144782	INOX HEX SCREW DIN933 M 5X15	TOR.EX.DIN933INOX A2-70 M 5X15	VIS HEX INOX DIN933 M 5X15
82	149914	INOX HEX. NUT DIN 934 M-5	TUER.EX.DIN934 INOX A2-70 M 5	ECROU HEX. INOX DIN 934 M-5
83	280842	EARTH INTAKE	TOMA DE TIERRA	PRISE TERRE
84	146076	BICR ROUND SCREW DIN84 M 4X 8	TOR.CIL.DIN84-4.8 B.TRI.M 4X 8	VIS ROND BICR DIN84-4.8 M 4X 8
85	149732	BICR.EXT TOOT.WASH DIN6798 M4	ARAN.DEN.EXT.B.TRI.DIN6798M 4	RONDEL.DEN.EX.BICR.DIN6798 M4

+	277145	FRONT(WITH DOOR AND LOCK)	FRONTAL(CON ESCOTILL.Y CIERRE)	FRONTAL(AVEC HUBLOT ET FERMET)
*	254904	COMPLETE DOOR	ESCOTILLA COMPLETA	HUBLOT COMPLET

info@zipnasklade.ru
8(800)500-69-51

Nº	REF.	DENOMINATION	DENOMINACIÓN	DÉNOMINATION
		FROM MACHINE Nº 660.461	A PARTIR DE LA MÁQUINA Nº 660.461	A PARTIR DE LA MACHINE Nº 660.461
72	289389	SLIDING BLOCKER	BLOQUEADOR DESLIZANTE	BLOQUEUR COULISSANT

info@zipnasklade.ru
8(800)500-69-51

Nº	REF.	DENOMINATION	DENOMINACIÓN	DÉNOMINATION
		FROM MACHINE Nº 661.356	A PARTIR DE LA MÁQUINA Nº 661.356	A PARTIR DE LA MACHINE Nº 661.356
34	408823	HANDLE	MANECILLA	MANETTE
35	150862	FLEXIBLE PIN DIN1481 D5X30	PASADOR ELASTICO DIN1481 D5X30	GOUJON ELASTIQUE DIN1481 D5X30
63	408831	LOCKING BOLT	BULON DE CIERRE	BOULON DE FERMETURE

info@zipnasklade.ru
8(800)500-69-51

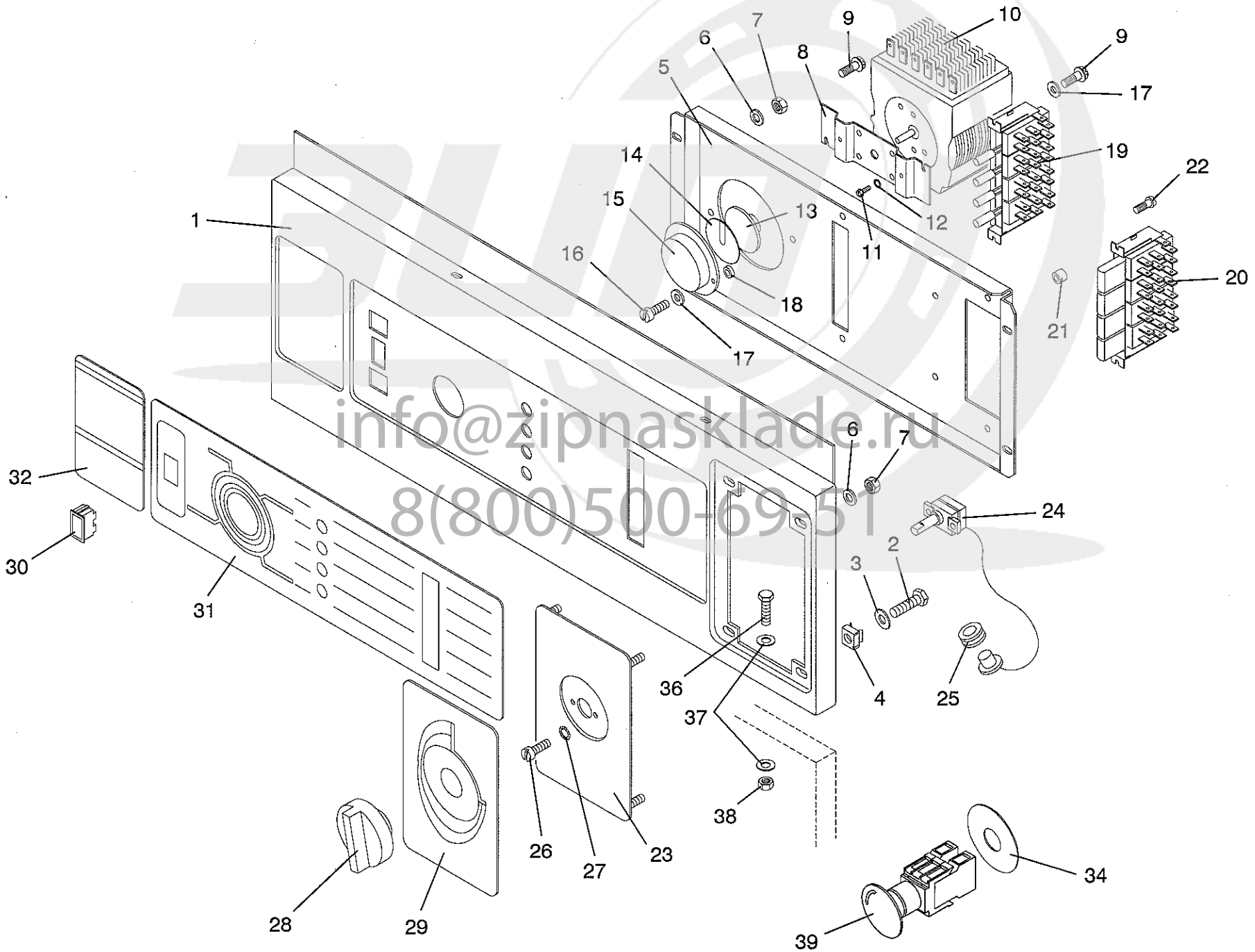

info@zipnasklade.ru
8(800)500-69-51

LS-307 5

U-11903

Nº	REF.	DENOMINATION	DENOMINACIÓN	DÉNOMINATION
1	284133	CONTROL PANEL	PANEL DE MANDOS	TABLEAU DE COMMANDES
2	144881	INOX HEX SCREW DIN933 M 6X16	TOR.EX.DIN933INOX A2-70 M 6X16	VIS HEX INOX DIN933 M 6X16
3	149310	INOX.A2 WASHER DIN125 6,4	ARAN. DIN125 INOX A2 6,4	RONDELLE INOX.A2 DIN125 6,4
4	165019	CAGED NUT M-6 0,5-1,5	TUER.ENJ.M6 0,5-1,5 R.310007-9	ECROU PRESIONER M-6 0,5-1,5
5	271783	KEYBOARD BRACKET	SOPORTE TECLADOS	SUPPORT CLAVIERS
6	219758	WASHER 12X4X1,5	ARANDELA 12X4X1,5	RONDELLE 12X4X1,5
7	150185	BICR.HEX.NUT DIN934-8 M4	TUER.EX.DIN934-8 B.TRI.M 4	ECROU HEX.DIN934-8 BICR.M4
8	271791	TIMER BRACKET	SOPORTE PROGRAMADOR	SUPPORT PROGRAMMATEUR
9	183400	CYL.PLATE SCREW ST-4 20 C/AL	TOR.CHAPA ST-4 20 C/AL.T25	VIS PLAQUE CYL.ST-4 20 C/AL
10	198770	TIMER P55 GR 5069A	PROG.P55GR5069A(305052+V4-201)	PROGRAMMATEUR P55 GR 5069A
11	146068	BICR CYL SCREW DIN84-4.M 4X 5	TOR.CIL.DIN84-4.8 B.TRI.M 4X 5	VIS CYL BICR DIN84-4.8 M 4X 5
12	149732	BICR.EXT TOOT.WASH DIN6798 M4	ARAN.DEN.EXT.B.TRI.DIN6798M 4	RONDEL.DEN.EX.BICR.DIN6798 M4
13	261545	TIMER PLATE BRACKET	SOPORTE PLACA PROGRAMADOR	SUPPORT PLAQUE PROGRAMMATEUR
14	193805	TIMER PLATE	PLACA PROGRAMADOR	PLAQUE PROGRAMMATEUR
15	300244	TIMER SPYHOLE	MIRILLA PROGRAMADOR	VITRE PROGRAMMATEUR
16	146084	BICR CYL SCREW DIN84 M 4X 10	TOR.CIL.DIN84-4.8 B.TRI.M 4X10	VIS CYL BICR DIN84-4.8 M 4X 10
17	149476	BICR.WASHER B DIN125-ST 4,3	ARAN.B DIN125-ST B.TRI. 4,3	RONDELLE B DIN125-ST BICR.4,3
18	149880	WASHER DUBO M-4	ARANDELA DUBO M 4	RONDELLE DUBO M-4
19	132233	KEYBOARD 9624/HP	TECLADO (315846-V4.285)	CLAVIER 9624/HP
	132449	ROUND GREY BUTTON	TECLA GRIS REDONDA 64401124000	BOUTON-POUSSOIR GRIS ROND
20	262253	KEYBOARD	TECLADO (293654+V4.285)	CLAVIER
	162818	GREY BUTTON	TECLA GRIS	BOUTTON POUSSOIR GRIS
	162834	WHITE BUTTON WITH LAMP	TECLA BLANCA CON LAMPARA	BOUTON-POUSSOIR BLANC
21	261966	SEPARATOR 8X 4X 7	SEPARADOR 8X 4X 7	SEPARATEUR 8X 4X 7
22	166645	CYL.PLATE SCREW DIN7971 8X5/8"	TOR.CHAPA CILI.DIN7971 8X5/8"	VIS PLAQUE CIL.DIN7971 8X5/8"
23	283663	PANEL THERMOSTAT PLATE	PLACA TERMOSTATO PANEL	PLAQUE THERMOSTAT TABLEAU
24	182170	THERMOSTAT 55.13216 040	TERMOSTATO EGO 55.13216.040	THERMOSTAT 55.13216.040
25	157198	THERMOSTAT SHEATH LODGING	PASAMUROS TERMOSTATO	LOGEMENT THERMOSTAT
26	195685	INOX FLAT SCREW DIN85 M4X6 A2	TOR.PLA.DIN85 INOX A2-70 M4X 6	VIS PLAT INOX DIN85 M4X6 A2-70
27	149732	BICR.EXT TOOT.WASH DIN6798 M4	ARAN.DEN.EXT.B.TRI.DIN6798M 4	RONDEL.DEN.EX.BICR.DIN6798 M4

info@zipnasklade.ru
8(800)500-69-51

Nº	REF.	DENOMINATION	DENOMINACIÓN	DÉNOMINATION
28	174706	BLACK CONTROL	MANDO NEGRO	COMMANDE NOIR
29	189423	THERMOSTAT PLATE	PLACA TERMOSTATO	PLAQUE THERMOSTAT
30	182196	PILOT 2WIXII/5717 GREEN	PILOTO 2WIXII/5717 VERDE	PILOT 2WIXII/5717 VERT
31	189902	ENGLISH CTRL.PANEL PLATE	PLACA PANEL DE MANDOS IN.	PLAQUE TABLEAU COM.ANGLAIS
	193722	SPANISH CTRL PANEL PLATE	PLACA PANEL DE MANDOS ES.	PLAQUE TABLEAU COM.ESPAGNOL
	193730	FRENCH CTRL.PANEL PLATE	PLACA PANEL DE MANDOS FR.	PLAQUE TABLEAU COM.FRANCAIS
	195719	GERMAN CTRL.PANEL PLATE	PLACA PANEL DE MANDOS AL.	PLAQUE TABLEAU COM.ALLEMAND
	193219	ITALIAN CTRL.PANEL PLATE	PLACA PANEL DE MANDOS IT.	PLAQUE TABLEAU COM.ITALIEN
	197194	DUTCH CTRL.PANEL PLATE	PLACA PANEL DE MANDOS HO.	PLAQUE TABLEAU COM.HOLLAND
	300871	PORTUGUESE CTRL.PANEL PLATE	PLACA PANEL DE MANDOS PO.	PLAQUE TABLEAU COM.PORTUGAIS
	300889	DANISH CTRL.PANEL PLATE	PLACA PANEL DE MANDOS DA.	PLAQUE TABLEAU COM.DANOIS
	300897	FINNISH CTRL.PANEL PLATE	PLACA PANEL DE MANDOS FI.	PLAQUE TABLEAU COM.FINLAND
	300905	NORWEGIAN CTRL.PANEL PLATE	PLACA PANEL DE MANDOS NO.	PLAQUE TABLEAU COM.NORVÉGIEN
	300913	SWEDISH CTRL.PANEL PLATE	PLACA PANEL DE MANDOS SU.	PLAQUE TABLEAU COM.SUÉDOIS
	300921	GREEK CTRL.PANEL PLATE	PLACA PANEL DE MANDOS GR.	PLATE TABLEAU COM.GREC
32	301069	ENGLISH SAFETY INSTR.PLATE	PLACA INSTR.SEGURIDAD IN.	PLAQUE INSTR.SECURITE ANGLAIS
	301077	SPANISH SAFETY INSTR.PLATE	PLACA INSTR.SEGURIDAD ES.	PLAQUE INSTR.SECURITE ESPAGNOL
	301085	FRENCH SAFETY INSTR.PLATE	PLACA INSTR.SEGURIDAD FR.	PLAQUE INSTR.SECURITE FRANCAIS
	301093	GERMAN SAFETY INSTR.PLATE	PLACA INSTR.SEGURIDAD AL.	PLAQUE INSTR.SECURITE ALLEMAND
	301101	ITALIAN SAFETY INSTR.PLATE	PLACA INSTR.SEGURIDAD IT.	PLAQUE INSTR.SECURITE ITALIEN
	301119	PORTUGUESE SAFETY INSTR.PLATE	PLACA INSTR.SEGURIDAD PO.	PLAQUE INST.SECURITE PORTUGAIS
	301127	DUTCH SAFETY INSTR.PLATE	PLACA INSTR.SEGURIDAD HO.	PLAQUE INSTR.SECURITE HOLLAND.
	301135	DANISH SAFETY INSTR.PLATE	PLACA INSTR.SEGURIDAD DA.	PLAQUE INSTR.SAFETY DANOIS
	301143	FINNISH SAFETY INSTR.PLATE	PLACA INSTR.SEGURIDAD FI.	PLAQUE INSTR.SECURITE FINLAND.
	301150	NORWEGIAN SAFETY INSTR.PLATE	PLACA INSTR.SEGURIDAD NO.	PLAQUE INST.SECURITE NORVÉGIEN
	301168	SWEDISH SAFETY INSTR.PLATE	PLACA INSTR.SEGURIDAD SU.	PLAQUE INSTR.SECURITE SUÉDOIS
	301176	GREEK SAFETY INSTR.PLATE	PLACA INSTR.SEGURIDAD GR.	PLAQUE INSTR.SECURITE GREC
	301184	JAPENESE SAFETY INSTR.PLATE	PLACA INSTR.SEGURIDAD JA.	PLAQUE INSTR.SECURITE JAPONAIS
33	192310	MUSHROOM PUSH-BUTTON	PUL.HONGO ENCL.3SB10 (341529)	PULSATEUR TYPE COUP DE POING
34	192294	YELLOW RING	ARO AMARILLO	BAGUE JAUNE

info@zipnasklade.ru
8(800)500-69-51

Nº	REF.	DENOMINATION	DENOMINACIÓN	DÉNOMINATION
35	197343	CONNECTION ELEMENT 3SB13 20-0A	ELEMENTO CONEXION 3SB13 20-0A	ELEMENT CONNEXION 3SB13 20-0A
36	146274	BICR.HEX SCREW DIN933-8 M-5X10	TOR.EX.DIN933-8.8 B.TRI.M 5X10	VIS HEX.BICR.DIN933-8.8 M-5X10
37	149534	BICR.WASHER B DIN125-ST 5,3	ARAN.B DIN125-ST B.TRI. 5,3	RONDELLE B BICR.DIN125-ST 5,3
38	150177	BICR HEX NUT DIN934-8 M5	TUER.EX.DIN934-8 B.TRI.M 5	ECROU HEX DIN934-8 BIC.M5

info@zipnasklade.ru
8(800)500-69-51

Nº	REF.	DENOMINATION	DENOMINACIÓN	DÉNOMINATION
		FROM MACHINE Nº 660.161	A PARTIR DE LA MÁQUINA Nº 660.161	A PARTIR DE LA MACHINE Nº 660.161
10	305052	TIMER P55 GR 5069 D	PROGRAMADOR P55 GR 5069 D	PROGRAMMATEUR P55 GR 5069 D

info@zipnasklade.ru
8(800)500-69-51

Nº	REF.	DENOMINATION FROM MACHINE Nº 660.566	DENOMINACIÓN A PARTIR DE LA MÁQUINA Nº 660.566	DÉNOMINATION A PARTIR DE LA MACHINE Nº 660.566
19	315846	KEYBOARD	TECLADO (348979+V4.285)	CLAVIER
20	293654	KEYBOARD	TECLADO (437731+V4.285)	CLAVIER
21	261966	CANCELLED	ANULADO	ANNULE

info@zipnasklade.ru
8(800)500-69-51

Nº	REF.	DENOMINATION	DENOMINACIÓN	DÉNOMINATION
		FROM MACHINE Nº 660.001	A PARTIR DE LA MÁQUINA Nº 660.001	A PARTIR DE LA MACHINE Nº 660.001
33	192310	CANCELLED	ANULADO	ANNULE
35	197343	CANCELLED	ANULADO	ANNULE
39	341529	EMERGENCY STOP LC	PARO EMERGENCIA LC	ARRET EMERGENCE LC

info@zipnasklade.ru
8(800)500-69-51

info@zipnasklade.ru
8(800)500-69-51

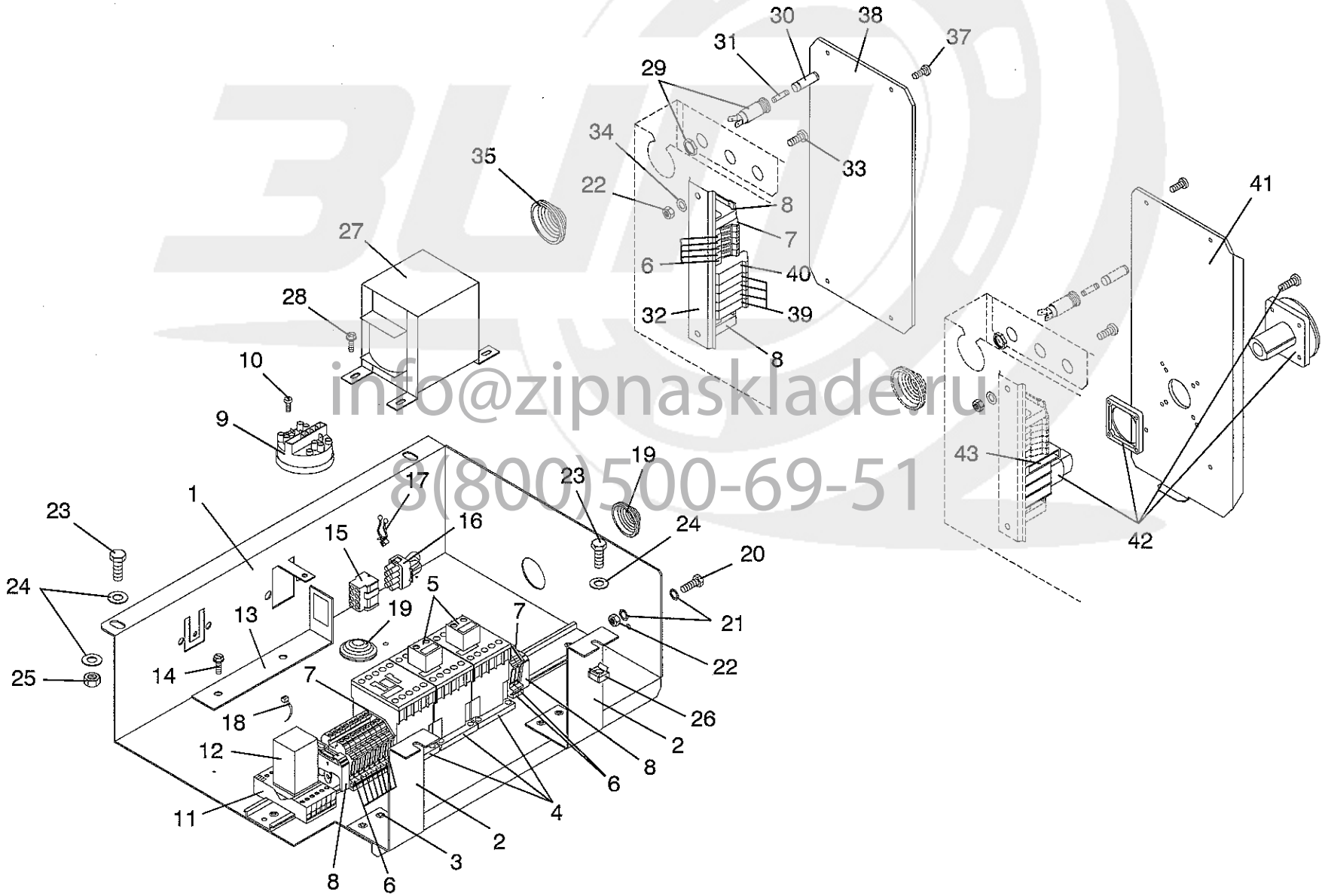

info@zipnaskladev.ru
8(800)500-69-51

U-11904

Nº	REF.	DENOMINATION	DENOMINACIÓN	DÉNOMINATION
1	271742	INSTALLATION BOX PLATE	PLACA CAJA INSTALACION	PLAQUE BOITE INSTALLATION
2	276550	INSTALLATION BOX BRACKET	SOPORTE CAJA INSTALACION	SUPPORT BOITE INSTALLATION
3	151878	RIVET POP TLP/D/636/BS4,8X 9,1	REMA.POP TLP/D/636/BS 4,8X 9,1	RIVET TLP/D/636/BS 4,8X 9,1
4	193441	CONTACTOR 3TF30 01-OAN2	CONTACTOR 3TF30 01-OAN2 ZZ	CONTACTEUR 3TF30 01-OAN2
	194050	COIL 3TY7 403-OAN2	BOBINA 3TY7 403-OAN2 ZZ	BOBINE 3TY7 403-OAN2
5	193458	AUX. CONTACT BLOCK 3TX4010-2A	BLOQUE CONTAC.AUX.3TX4010-2 ZZ	BLOC CONTACT AUX. 3TX4010-2A
6	155457	TERMINAL BC 4/6 R 638255	BORNA CIAMA BC 4/6 R 638255	BORNE BC 4/6 R 638255
7	155275	END COVER FC2 5/10	TAPA FIN.CIAMA FC2.5/10 635455	COUVERCLE FINAL FC2.5/10
8	142331	FIXING CLAMP	TOPE FIJAC.S/BORDES R.LEG39400	BRIDE FIXATION
9	176669	TRIPLE LEVEL PRESSOSTAT	PRESOSTATO NIVEL TRIPLE	PRESSOSTAT NIVEAU TRIPLE
10	166835	SELFTHREADED SCREW	TOR.CELO RF81T 3,5X12	VIS AUTO-FILETE 271147231900
11	196139	RELAY BASE PF113A-D	BASE RELE UNDECAL PF113A-D	BASE RELAIS PF113A-D
12	136168	RELAY C3-A30/220V CA	RELE RELECO C3-A30/220V CA	RELAIS C3-A30/220V CA
13	256354	TRANSFORMER BRACKET	SOPORTE TRANSFORMADOR	SUPPORT TRANSFORMATEUR
14	183400	CYL.PLATE SCREW ST-4 20 C/AL	TOR.CHAPA ST-4 20 C/AL.T25	VIS PLAQUE CYL.ST-4 20 C/AL
15	139402	PROTECTOR 1/480709-0	PROTECTOR 1/480709-0	PROTECTEUR 1/480709-0
16	279448	HOT WATER PLUG (FOR MACHINES HEATING WITHOUT)	CONECTORA AGUA CALIENTE (PARA MODELOS SIN CALEFACCION)	CONNECTEUR EAU CHAUDE (POUR MACHINES SENS CHAUFAGE)
17	199893	CLAMP STL-450-3-01	ABRAZADERA STL-450-3-01	BRIDE STL-450-3-01
18	140434	CLAMP 2221	BRIDA UNEX 2221	BRIDE 2221
19	181701	LEGRAND CONE 91911	CONO LEGRAND 91911	CONE LEGRAND 91911
20	146290	BICR.HEX SCREW DIN933-8 M-5X20	TOR.EX.DIN933-8.8 B.TRI.M 5X20	VIS HEX BICR.DIN933-8.8 M-5X20
21	149724	BICR EXT.TOOT.WASH.DIN6798 M5	ARAN.DEN.EXT.B.TRI.DIN6798M 5	RONDEL DEN.EX.BICR.DIN6798 M5
22	150177	BICR HEX NUT DIN934-8 M5	TUER.EX.DIN934-8 B.TRI.M 5	ECROU HEX DIN934-8 BIC.M5
23	146233	BICR.HEX SCREW DIN933-8 M6X15	TOR.EX.DIN933-8.8 B.TRI.M 6X15	VIS HEX DIN933-8.8 BICR.M6X15
24	149526	BICR.WASHER B DIN125-ST 6,4	ARAN.B DIN125-ST B.TRI. 6,4	RONDELLE B DIN125-ST BICR.6,4
25	150227	BICR HEX NUT DIN934-8 M6	TUER.EX.DIN934-8 B.TRI.M 6	ECROU HEX DIN934-8 BICR.M6
26	165019	CAGED NUT M-6 0,5-1,5	TUER.ENJ.M6 0,5-1,5 R.310007-9	ECROU PRESIONER M-6 0,5-1,5
27	300772	TRANSFORMER IP00 100 VA (FOR 200V)	TRANSFORMADOR IP00 100 VA (PARA 200V)	TRANSFORMATEUR IP00 100 VA (POUR 200V)

info@zipnasklade.ru
8(800)500-69-51

Nº	REF.	DENOMINATION	DENOMINACIÓN	DÉNOMINATION
	300764	TRANSFORMER IP00 100 VA (FOR 208 AND 440V)	TRANSFORMADOR IP00 100 VA (PARA 208 Y 440V)	TRANSFORMATEUR IP00 100 VA (POUR 208 ET 440V)
	300756	TRANSFORMER IP00 100 VA (WITH SWITCH DISCONNECTOR) (FOR 220 AND 380V)	TRANSFORMADOR IP00 100 VA (CON INTERRUPTOR SECCIONADOR) (PARA 220 Y 380V)	TRANSFORMATEUR IP00 100 VA (AVEC INTERRUPTEUR SECTIONNER) (POUR 220 ET 380V)
	300772	TRANSFORMER IP00 100 VA (WITH SWITCH DISCONNECTOR) (FOR 240 AND 415V)	TRANSFORMADOR IP00 100 VA (CON INTERRUPTOR SECCIONADOR) (PARA 240 Y 415V)	TRANSFORMATEUR IP00 100 VA (AVEC INTERRUPTEUR SECTIONNER) (POUR 240 ET 415V)
28	183400	CYL.PLATE SCREW ST-4 20 C/AL	TOR.CHAPA ST-4 20 C/AL.T25	VIS PLAQUE CYL.ST-4 20 C/AL
29	160119	FUSE HOLDER REF.FEC 031 1631	PORTAFUSIBLES REF.FEC.031.1631	PORTE-FUSIBLE REF.FEC 031 1631
30	192286	BAYONET HEAD (FOR FUSE 5X20)	CABEZA BAYONETA FEK.031.1611 (PARA CARTUCHO 5X20)	TETE BAYONETTE (POUR CARTOUCHE 5X20)
	137661	BAYONET HEAD (FOR FUSE 6X32)	CABEZA BAYONETA FEK.031.1613 (PARA CARTUCHO 6X32)	TETE BAYONETTE (POUR CARTOUCHE 6X32)
31	302612	FUSE FSL 0034.3775 1A (FOR FUSE 5X20)	CART.FUSIB.FSL 0034.3775 1 A (PARA CARTUCHO 5X20)	CARTOUCHE FUSIBLE FSL 00343775 (POUR CARTOUCHE 5X20)
	182485	FUSE FST 0034.5225 1A (FOR FUSE 6X32)	CART.FUSIB.FST 0034.5225 1 A (PARA CARTUCHO 6X32)	CARTOUCHE FUS.FST 0034.5225 1A (POUR CARTOUCHE 6X32)
32	245571	CONTACTOR FIXING PROFILE	PERFIL FIJACION CONTACTORES	PROFILE FIXATION CONTACTEURS
33	146175	BICR CYL SCREW DIN84-4 M-5X10	TOR.CIL.DIN84-4.8 B.TRI.M 5X10	VIS CYL BICR DIN84-4.8.M-5X10
34	149534	BICR.WASHER B DIN125-ST 5,3	ARAN.B DIN125-ST B.TRI. 5,3	RONDELLE B BICR.DIN125-ST 5,3
35	139683	CONE ECPC-6	CONO HIMEL ECPC-6	CONE ECPC-6
37	328229	SCREW ALO.T25 AR.18ESTR M 4X10	TOR.ALOM.T25 AR.18ESTR.M 4X10	VIS ALOM.T25 AR.18ESTR.M 4X10
38	279836	CURRENT INPUT COVER (WITHOUT SWITCH DISCONNECTOR)	TAPA ENTRADA CORRIENTE (SIN INTERRUPTOR SECCIONADOR)	COUVERCLE ENTRÉE DE COURANT (SANS INTERRUPTEUR SECTIONNER)
39	155465	TERMINAL BC 10/16R 638455 (WITHOUT SWITCH DISCONNECTOR)	BORNA CIAMA BC 10/16R 638455 (SIN INTERRUPTOR SECCIONADOR)	BORNE BC 10/16R 638455 (SANS INTERRUPTEUR SECTIONNER)
40	193425	TERMINAL BCT 10 631912 (WITHOUT SWITCH DISCONNECTOR)	BORNA CIAMA BCT 10 631912 (SIN INTERRUPTOR SECCIONADOR)	BORNE BCT 10 631912 (SANS INTERRUPTEUR SECTIONNER)
41	277582	CURRENT INPUT COVER (WITH SWITCH DISCONNECTOR)	TAPA ENTRADA CORRIENTE (CON INTERRUPTOR SECCIONADOR)	COUVERCLE ENTRÉE DE COURANT (AVEC INTERRUPTEUR SECTIONNER)
42	198861	GRAL.SWITCH P1-25/V/SVB (WITH SWITCH DISCONNECTOR)	INTERRUPT.GENERAL P1-25/V/SVB (CON INTERRUPTOR SECCIONADOR)	INTERRUPTEUR GRAL.P1-25/V/SVB (AVEC INTERRUPTEUR SECTIONNER)
43	300400	AUX.CONTACT. HI11.P1/P3Z (WITH SWITCH DISCONNECTOR)	CONTACTO AUXILIAR HI11-P1/P3Z (CON INTERRUPTOR SECCIONADOR)	CONTACT.AUX.HI11-P1/P3Z (AVEC INTERRUPTEUR SECTIONNER)

info@zippasklade.ru
8(800)500-69-51

Nº	REF.	DENOMINATION	DENOMINACIÓN	DÉNOMINATION
		FROM MACHINE Nº 661.969	A PARTIR DE LA MÁQUINA Nº 661.969	A PARTIR DE LA MACHINE Nº 661.969
4	326231	CONTACTOR 3RT10 17-1AP02	CONTACTOR 3RT10 17-1AP02	CONTACTEUR 3RT10 17-1AP02
	194050	CANCELLED	ANULADO	ANNULE
5	326298	AUX.CONTACT BLOCK3RH1911-1AA10	BLOQUE CONTAC.AUX3RH1911-1AA10	BLOC CONTACT AUX.3RH1911-1AA10

info@zipnasklade.ru
8(800)500-69-51

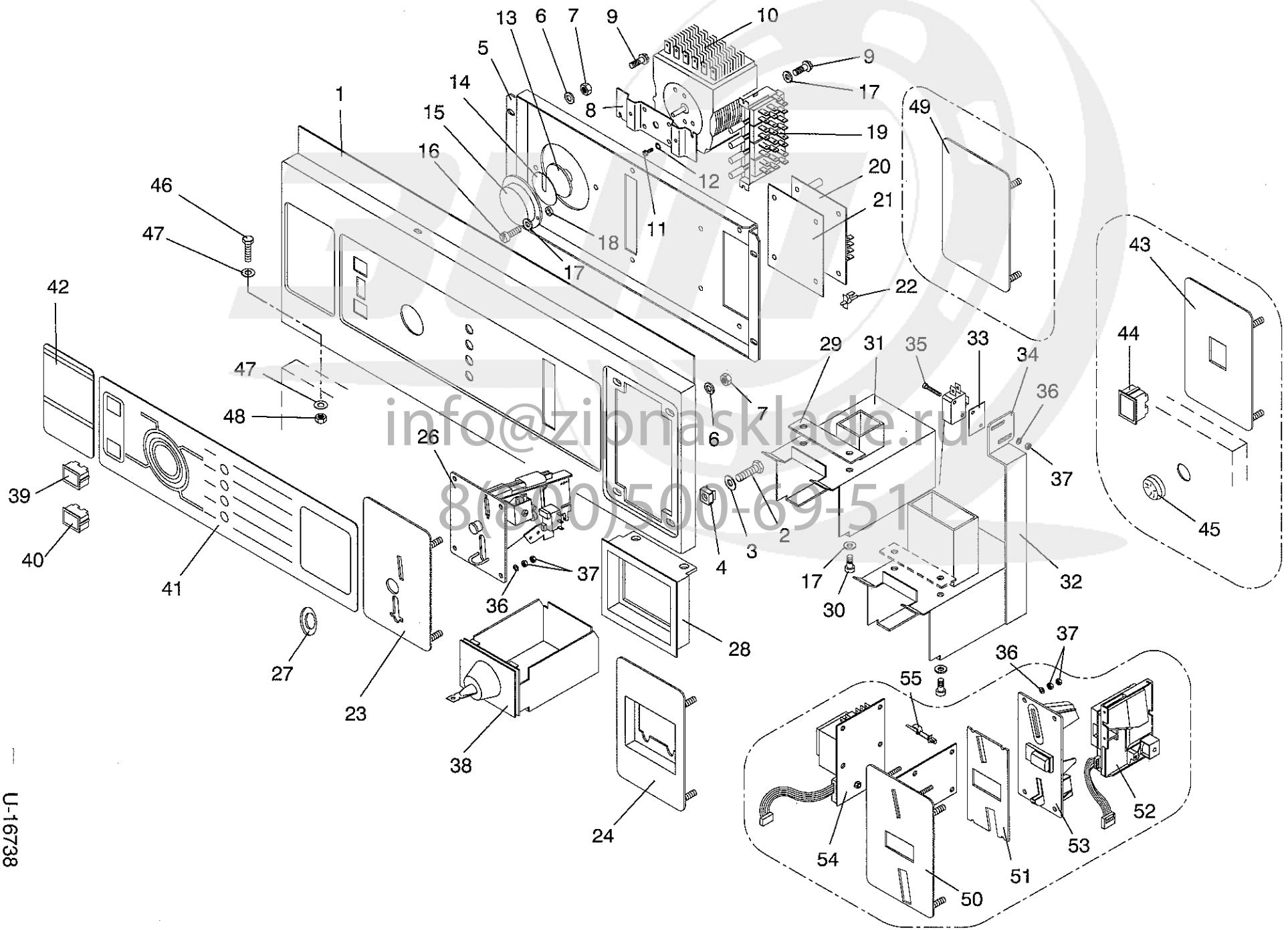

info@zipnasklade.ru
8(800)500-69-51

LS-307 7

U-16738

Nº	REF.	DENOMINATION	DENOMINACIÓN	DÉNOMINATION
1	284133	CONTROL PANEL	PANEL DE MANDOS	TABLEAU DE COMMANDES
2	144881	INOX HEX SCREW DIN933 M 6X16	TOR.EX.DIN933INOX A2-70 M 6X16	VIS HEX INOX DIN933 M 6X16
3	149310	INOX.A2 WASHER DIN125 6,4	ARAN. DIN125 INOX A2 6,4	RONDELLE INOX.A2 DIN125 6,4
4	165019	CAGED NUT M-6 0,5-1,5	TUER.ENJ.M6 0,5-1,5 R.310007-9	ECROU PRESIONER M-6 0,5-1,5
5	271783	KEYBOARD BRACKET	SOPORTE TECLADOS	SUPPORT CLAVIERS
6	219758	WASHER 12X4X1,5	ARANDELA 12X4X1,5	RONDELLE 12X4X1,5
7	150185	BICR.HEX.NUT DIN934-8 M4	TUER.EX.DIN934-8 B.TRI.M 4	ECROU HEX.DIN934-8 BICR.M4
8	271791	TIMER BRACKET	SOPORTE PROGRAMADOR	SUPPORT PROGRAMMATEUR
9	183400	CYL.PLATE SCREW ST-4 20 C/AL	TOR.CHAPA ST-4 20 C/AL.T25	VIS PLAQUE CYL.ST-4 20 C/AL
10	198770	TIMER P55 GR 5069A	PROG.P55GR5069A(305052+V4-201)	PROGRAMMATEUR P55 GR 5069A
11	146068	BICR CYL SCREW DIN84-4.M 4X 5	TOR.CIL.DIN84-4.8 B.TRI.M 4X 5	VIS CYL BICR DIN84-4.8 M 4X 5
12	149732	BICR.EXT TOOT.WASH DIN6798 M4	ARAN.DEN.EXT.B.TRI.DIN6798M 4	RONDEL.DEN.EX.BICR.DIN6798 M4
13	261545	TIMER PLATE BRACKET	SOPORTE PLACA PROGRAMADOR	SUPPORT PLAQUE PROGRAMMATEUR
14	193805	TIMER PLATE	PLACA PROGRAMADOR	PLAQUE PROGRAMMATEUR
15	300244	TIMER SPYHOLE	MIRILLA PROGRAMADOR	VITRE PROGRAMMATEUR
16	146084	BICR CYL SCREW DIN84 M 4X 10	TOR.CIL.DIN84-4.8 B.TRI.M 4X10	VIS CYL BICR DIN84-4.8 M 4X 10
17	149476	BICR.WASHER B DIN125-ST 4,3	ARAN.B DIN125-ST B.TRI. 4,3	RONDELLE B DIN125-ST BICR.4,3
18	149880	WASHER DUBO M-4	ARANDELA DUBO M 4	RONDELLE DUBO M-4
19	132233	KEYBOARD 9624/HP	TECLADO (315846-V4.285)	CLAVIER 9624/HP
	132449	ROUND GREY BUTTON	TECLA GRIS REDONDA 64401124000	BOUTON-POUSSOIR GRIS ROND
20	170100	COIN COUNTER	CONTADOR MONEDAS	COMPTEUR DE MONNAIS
21	278135	COIN COUNTER ISOLATION	AISLANTE CONTADOR MONEDAS	ISOLANT COMPTEUR DE MONNAIS
22	193094	EXTREM.BRACKET EHCBS-5N RICHCO	SOPORTE EXTREMO EHCBS-5-01	SUPPORT EXTREM.EHCBS-5N RICHCO
23	278333	COIN METER PLATE (EXCEPT GREENWALD COIN METER)	PLACA MONEDERO (EXCEPTO MONEDERO GREENWALD)	PLAQUE MONNAYEUR (SAUF MONNAYEUR GREENWALD)
24	281162	COIN-METER PLATE (FOR GREENWALD COIN-METER)	PLACA MONEDERO (PARA MONEDERO GREENWALD)	PLAQUE MONNAYEUR (POUR MONNAYEUR GREENWALD
26	130831	COIN-METER B-400 TOKEN GIRBAU	MONEDERO ISMEA B-400 FICHA G.	MONNAYEUR B-400 JETON GIRBAU
		OTHER COIN-METERS B-400 (TO SPECIFY COIN)	OTROS MONEDEROS B-400 (ESPECIFICAR MONEDA)	AUTRES MONNAYEURS B-400 (SPECIFIER MONNAI)
	182295	COIN-METER ELECTROMAGNET B-400	ELECT.MONE.ISMEA B400 220V ZZ	ELECTROAIMANT MONNAYEUR B-400

info@zipnasklade.ru
8(800)500-69-51

Nº	REF.	DENOMINATION	DENOMINACIÓN	DÉNOMINATION
	177022	COIN-METER MICROSWITCH B400	MICRORRUP.MONEDERO ISMEA B400	MICRORRUPTEUR MONNAYEUR B400
27	147710	TOKEN GIRBAU 24R15	FICHA 24R15 CON ANAGRAM.GIRBAU	JETON GIRBAU 24R15
28	258665	COIN BOX PLATE	CARATULA CAJON MONEDAS	PLAQUE BOITE MONNAIES
29	280768	BOX BRACKET FIXING	SUJECION APOYO CAJON	FIXATION APPUI BOITE
30	161646	ALLEN SCREW DIN 912 M-4X8	TOR.ALLDIN912-8.8 B.TRI.M 4X 8	VIS ALLEN DIN 912 M-4X8
31	281170	BOX SUPPORT (EXCEPT GREENWALD COIN METER)	APOYO CAJON (EXCEPTO MONEDERO GREENWALD)	APPUI BOITE (SAUF MONNAYEUR GREENWALD)
32	284083	BOX SUPPORT (FOR GREENWALD COIN-METER)	APOYO CAJON RECOGEMONEDAS (PARA MONEDERO GREENWALD)	APPUI BOX (POUR MONNAYEUR GREENWALD
33	284208	COIN-METER MICROSWITCH (FOR GREENWALD COIN-METER)	MICRORRUPTOR MONEDERO (PARA MONEDERO GREENWALD)	MICRORRUPTEUR MONNAYEUR (POUR MONNAYEUR GREENWALD
34	244327	MICROSWITCH ISOLATION	AISLANTE MICRORRUPTOR	ISOLANT MICRORRUPTEUR
35	146050	BICR CYL SCREW DIN84 M-3X20	TOR.CIL.DIN84-4.8 B.TRI.M 3X20	VIS CYL BICR DIN84-4.8 M 3X20
36	149484	BICR.WASHER B DIN125-ST 3,2	ARAN.B DIN125-ST B.TRI. 3,2	RONDELLE B.DIN125-ST BICR. 3,2
37	149906	INOX. HEX. NUT DIN 934 M-3	TUER.EX.DIN934 INOX A2-70 M 3	ECROU HEX. INOX DIN934 M-3
38	169169	COIN BOX UG400A GI	CAJA MONEDAS UG400A GI	BOITE MONNAIE UG400A GI
39	193789	PILOT 2WIXII/(10465) WHITE	PILOTO BL REF.P821225L00000	PILOTE 2WIXII/(10465) BLANC
40	182196	PILOT 2WIXII/5717 GREEN	PILOTO 2WIXII/5717 VERDE	PILOT 2WIXII/5717 VERT
41	300939	ENGLISH CTRL.PANEL PLATE	PLACA PANEL DE MANDOS IN.	PLAQUE TABLEAU COM.ANGLAIS
	300947	SPANISH CTRL.PANEL PLATE	PLACA PANEL DE MANDOS ES.	PLAQUE TABLEAU COM.ESPAGNOL.
	300954	FRENCH CTRL.PANEL PLATE	PLACA PANEL DE MANDOS FR.	PLAQUE TABLEAU COM.FRANCAIS
	300962	GERMAN CTRL.PANEL PLATE	PLACA PANEL DE MANDOS AL.	PLAQUE TABLEAU COM.ALLEMAND
	300970	ITALIAN CTRL.PANEL PLATE	PLACA PANEL DE MANDOS IT.	PLAQUE TABLEAU COM.ITALIEN
	300988	PORTUGUESE CTRL.PANEL PLATE	PLACA PANEL DE MANDOS PO.	PLAQUE TABLEAU COM.PORTUGAIS
	300996	DUTCH CTRL.PANEL PLATE	PLACA PANEL DE MANDOS HO.	PLAQUE TABLEAU COM.HOLLAND.
	301002	DANISH CTRL.PANEL PLATE	PLACA PANEL DE MANDOS DA.	PLAQUE TABLEAU COM.DANOIS
	301010	FINNISH CTRL.PANEL PLATE	PLACA PANEL DE MANDOS FI.	PLAQUE TABLEAU COM.FINLAND
	301028	NORWEGIAN CTRL. PANEL PLATE	PLACA PANEL DE MANDOS NO.	PLAQUE TABLEAU COM.NORVÉGIEN
	301028	NORWEGIAN CTRL. PANEL PLATE	PLACA PANEL DE MANDOS NO.	PLAQUE TABLEAU COM.NORVÉGIEN
	301036	SWEDISH CTRL.PANEL PLATE	PLACA PANEL DE MANDOS SU.	PLAQUE TABLEAU COM.SUÉDOIS
	301044	GREEK CTRL.PANEL PLATE	PLACA PANEL DE MANDOS GR.	PLAQUE TABLEAU COM.GREC

info@zipnasklade.ru
8(800)500-69-51

Nº	REF.	DENOMINATION	DENOMINACIÓN	DÉNOMINATION
42	301069	ENGLISH SAFETY INSTR.PLATE	PLACA INSTR.SEGURIDAD IN.	PLAQUE INSTR.SECURITE ANGLAIS
	301077	SPANISH SAFETY INSTR.PLATE	PLACA INSTR.SEGURIDAD ES.	PLAQUE INSTR.SECURITE ESPAGNOL
	301085	FRENCH SAFETY INSTR.PLATE	PLACA INSTR.SEGURIDAD FR.	PLAQUE INSTR.SECURITE FRANCAIS
	301093	GERMAN SAFETY INSTR.PLATE	PLACA INSTR.SEGURIDAD AL.	PLAQUE INSTR.SECURITE ALLEMAND
	301101	ITALIAN SAFETY INSTR.PLATE	PLACA INSTR.SEGURIDAD IT.	PLAQUE INSTR.SECURITE ITALIEN
	301119	PORTUGUESE SAFETY INSTR.PLATE	PLACA INSTR.SEGURIDAD PO.	PLAQUE INST.SECURITE PORTUGAIS
	301127	DUTCH SAFETY INSTR.PLATE	PLACA INSTR.SEGURIDAD HO.	PLAQUE INSTR.SECURITE HOLLAND.
	301143	FINNISH SAFETY INSTR.PLATE	PLACA INSTR.SEGURIDAD FI.	PLAQUE INSTR.SECURITE FINLAND.
	301150	NORWEGIAN SAFETY INSTR.PLATE	PLACA INSTR.SEGURIDAD NO.	PLAQUE INST.SECURITE NORVÉGIEN
	301168	SWEDISH SAFETY INSTR.PLATE	PLACA INSTR.SEGURIDAD SU.	PLAQUE INSTR.SECURITE SUÉDOIS
	301176	GREEK SAFETY INSTR.PLATE	PLACA INSTR.SEGURIDAD GR.	PLAQUE INSTR.SECURITE GREC
	301184	JAPENESE SAFETY INSTR.PLATE	PLACA INSTR.SEGURIDAD JA.	PLAQUE INSTR.SECURITE JAPONAIS
43	279745	PUSH-BUTTON PLATE	PLACA PULSADOR	PLAQUE PULSATEUR
44	138339	PUSH-BUTTON 2WIXII/5518	PULSADOR 2WIXII/5518	BOUTON-POUSSOIR 2WIXII/5518
45	160101	THERMOSTAT INTAKE STOPPER	TAPON TOMA TERMOSTATO	BOUCHON PRISE THERMOSTAT
46	146274	BICR.HEX SCREW DIN933-8 M-5X10	TOR.EX.DIN933-8.8 B.TRI.M 5X10	VIS HEX.BICR.DIN933-8.8 M-5X10
47	149534	BICR.WASHER B DIN125-ST 5,3	ARAN.B DIN125-ST B.TRI. 5,3	RONDELLE B BICR.DIN125-ST 5,3
48	150177	BICR HEX NUT DIN934-8 M5	TUER.EX.DIN934-8 B.TRI.M 5	ECROU HEX DIN934-8 BIC.M5

info@zipnasklade.ru
8(800)500-69-51

Nº	REF.	DENOMINATION	DENOMINACIÓN	DÉNOMINATION
		FROM MACHINE Nº 660.107	A PARTIR DE LA MÁQUINA Nº 660.107	A PARTIR DE LA MACHINE Nº 660.107
28	284216	COIN BOX PLATE	CARATULA CAJON MONEDAS	PLAQUE BOITE MONNAIES

info@zipnasklade.ru
8(800)500-69-51

Nº	REF.	DENOMINATION	DENOMINACIÓN	DÉNOMINATION
		FROM MACHINE Nº 660.159	A PARTIR DE LA MÁQUINA Nº 660.159	A PARTIR DE LA MACHINE Nº 660.159
10	305052	TIMER P55 GR 5069 D	PROGRAMADOR P55 GR 5069 D	PROGRAMMATEUR P55 GR 5069 D

info@zipnasklade.ru
8(800)500-69-51

Nº	REF.	DENOMINATION	DENOMINACIÓN	DÉNOMINATION
		FROM MACHINE Nº 660.303	A PARTIR DE LA MÁQUINA Nº 660.303	A PARTIR DE LA MACHINE Nº 660.303
20	304196	COIN COUNTER	CONTADOR MONEDAS	COMPTEUR MONNAIES
21	285221	KEYBOARD LODGING LID	TAPA ALOJAMIENTO TECLADO	COUVERCLE LOGEMENT CLAVIER
22	303255	END BRACKET EHCBS-12-01	SOPORTE EXTREMO EHCBS-12-01	SUPPORT FINAL EHCBS-12-01

info@zipnasklade.ru
8(800)500-69-51

Nº	REF.	DENOMINATION	DENOMINACIÓN	DÉNOMINATION
		FROM MACHINE Nº 660.550	A PARTIR DE LA MÁQUINA Nº 660.550	A PARTIR DE LA MACHINE Nº 660.550
19	315846	KEYBOARD	TECLADO (348979+V4.285)	CLAVIER

info@zipnasklade.ru
8(800)500-69-51

Nº	REF.	DENOMINATION	DENOMINACIÓN	DÉNOMINATION
		FROM MACHINE Nº 661.969	A PARTIR DE LA MÁQUINA Nº 661.969	A PARTIR DE LA MACHINE Nº 661.969
23	281121	COIN-METER PLATE (EXCEPT GREENWALD COIN METER)	PLACA MONEDERO (EXCEPTO MONEDERO GREENWALD)	PLAQUE MONNAYEUR (SAUF MONNAYEUR GREENWALD)
	278333	CANCELLED	ANULADO	ANNULE
26	338970	COIN-METER D10.WK TOKEN GIRBAU	MONEDERO D10.WK FICHA GIR.	MONNAYEUR D10.WK JETON GIRBAU
	130831	CANCELLED	ANULADO	ANNULE
	177022	CANCELLED	ANULADO	ANNULE
	182295	CANCELLED	ANULADO	ANNULE
49	278358	PLATE	PLACA CIEGA	PLAQUE
50	289769	COIN-METER PLATE (FOR PROGRAMMABLE COIN.METER)	PLACA MONEDERO (PARA MONEDERO PROGRAMABLE)	PLAQUE MONNAYEUR (POUR MONNAYEUR PROGRAMMABLE)
51	291310	COIN-METER PLATE SUPPLEMENT (FOR PROGRAMMABLE COIN.METER)	SUPLEMENTO PLACA MONEDERO (PARA MONEDERO PROGRAMABLE)	SUPPLEMENT PLAQUE MONNAYEUR (POUR MONNAYEUR PROGRAMMABLE)
52	306829	SELF-PROGRAMMABLE COIN-METER (TO SPECIFY COINS)	MONEDERO AUTO-PROGRAM.RM5F00 (ESPECIFICAR MONEDAS)	MONNAYEUR SELF-PROGRAMMABLE (SPECIFIER MONNAIES)
53	306837	SELF-PROGRAM.COIN-METER FRONT (FOR PROGRAMMABLE COIN.METER)	FRONTAL MONED.AUTO-PROGR.RMF6 (PARA MONEDERO PROGRAMABLE)	FRONTAL MONNAYEUR SELF-PROGRAM (POUR MONNAYEUR PROGRAMMABLE)
54	306589	AUX. SUPPLY PLATE RM4-A (FOR PROGRAMMABLE COIN.METER)	PLACA ALIMENTACION AUX.RM4-A (PARA MONEDERO PROGRAMABLE)	PLAQUE ALIMENTR.AUX.RM4-A (POUR MONNAYEUR PROGRAMMABLE)
55	303255	END BRACKET EHCBS-12-01 (FOR PROGRAMMABLE COIN.METER)	SOPORTE EXTREMO EHCBS-12-01 (PARA MONEDERO PROGRAMABLE)	SUPPORT FINAL EHCBS-12-01 (POUR MONNAYEUR PROGRAMMABLE)

info@zipnasklade.ru
8(800)500-69-51

info@zipnasklade.ru
8(800)500-69-51

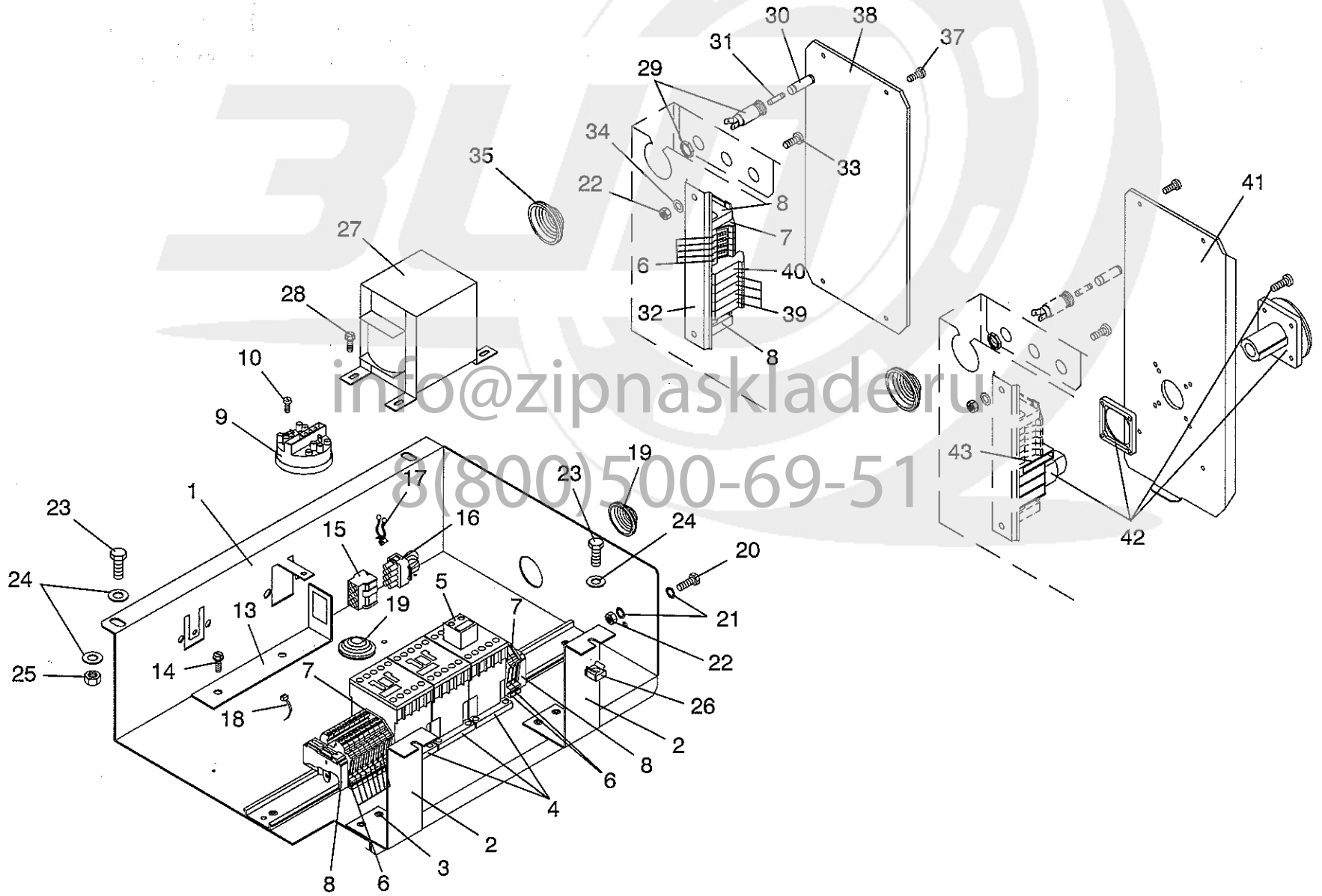

info@zipnasklader.ru
8(800)500-69-51

Nº	REF.	DENOMINATION	DENOMINACIÓN	DÉNOMINATION
1	271742	INSTALLATION BOX PLATE	PLACA CAJA INSTALACION	PLAQUE BOITE INSTALLATION
2	276550	INSTALLATION BOX BRACKET	SOPORTE CAJA INSTALACION	SUPPORT BOITE INSTALLATION
3	151878	RIVET POP TLP/D/636/BS4,8X 9,1	REMA.POP TLP/D/636/BS 4,8X 9,1	RIVET TLP/D/636/BS 4,8X 9,1
4	193441	CONTACTOR 3TF30 01-OAN2	CONTACTOR 3TF30 01-OAN2 ZZ	CONTACTEUR 3TF30 01-OAN2
	194050	COIL 3TY7 403-OAN2	BOBINA 3TY7 403-OAN2 ZZ	BOBINE 3TY7 403-OAN2
5	193458	AUX. CONTACT BLOCK 3TX4010-2A	BLOQUE CONTAC.AUX.3TX4010-2 ZZ	BLOC CONTACT AUX. 3TX4010-2A
6	155457	TERMINAL BC 4/6 R 638255	BORNA CIAMA BC 4/6 R 638255	BORNE BC 4/6 R 638255
7	155275	END COVER FC2 5/10	TAPA FIN.CIAMA FC2.5/10 635455	COUVERCLE FINAL FC2.5/10
8	142331	FIXING CLAMP	TOPE FIJAC.S/BORDES R.LEG39400	BRIDE FIXATION
9	176669	TRIPLE LEVEL PRESSOSTAT	PRESOSTATO NIVEL TRIPLE	PRESSOSTAT NIVEAU TRIPLE
10	166835	SELFTHREADED SCREW	TOR.CELO RF81T 3,5X12	VIS AUTO-FILETE 271147231900
13	256354	TRANSFORMER BRACKET	SOPORTE TRANSFORMADOR	SUPPORT TRANSFORMATEUR
14	183400	CYL.PLATE SCREW ST-4 20 C/AL	TOR.CHAPA ST-4 20 C/AL.T25	VIS PLAQUE CYL.ST-4 20 C/AL
15	139402	PROTECTOR 1/480709-0	PROTECTOR 1/480709-0	PROTECTEUR 1/480709-0
16	279448	HOT WATER PLUG (FOR MACHINES HEATING WITHOUT)	CONECTORA AGUA CALIENTE (PARA MODELOS SIN CALEFACCION)	CONNECTEUR EAU CHAUDE (POUR MACHINES SENS CHAUFAGE)
17	199893	CLAMP STL-450-3-01	ABRAZADERA STL-450-3-01	BRIDE STL-450-3-01
18	140434	CLAMP 2221	BRIDA UNEX 2221	BRIDE 2221
19	181701	LEGRAND CONE 91911	CONO LEGRAND 91911	CONE LEGRAND 91911
20	146290	BICR.HEX SCREW DIN933-8 M-5X20	TOR.EX.DIN933-8.8 B.TRI.M 5X20	VIS HEX BICR.DIN933-8.8 M-5X20
21	149724	BICR EXT.TOOT.WASH.DIN6798 M5	ARAN.DEN.EXT.B.TRI.DIN6798M 5	RONDEL DEN.EX.BICR.DIN6798 M5
22	150177	BICR HEX NUT DIN934-8 M5	TUER.EX.DIN934-8 B.TRI.M 5	ECROU HEX DIN934-8 BIC.M5
23	146233	BICR.HEX SCREW DIN933-8 M6X15	TOR.EX.DIN933-8.8 B.TRI.M 6X15	VIS HEX DIN933-8.8 BICR.M6X15
24	149526	BICR.WASHER B DIN125-ST 6,4	ARAN.B DIN125-ST B.TRI. 6,4	RONDELLE B DIN125-ST BICR.6,4
25	150227	BICR HEX NUT DIN934-8 M6	TUER.EX.DIN934-8 B.TRI.M 6	ECROU HEX DIN934-8 BICR.M6
26	165019	CAGED NUT M-6 0,5-1,5	TUER.ENJ.M6 0,5-1,5 R.310007-9	ECROU PRESIONER M-6 0,5-1,5
27	300772	TRANSFORMER IP00 100 VA (FOR 200V)	TRANSFORMADOR IP00 100 VA (PARA 200V)	TRANSFORMATEUR IP00 100 VA (POUR 200V)
	300764	TRANSFORMER IP00 100 VA (FOR 208 AND 440V)	TRANSFORMADOR IP00 100 VA (PARA 208 Y 440V)	TRANSFORMATEUR IP00 100 VA (POUR 208 ET 440V)

info@zipnasklade.ru
8(800)500-69-51

Nº	REF.	DENOMINATION	DENOMINACIÓN	DÉNOMINATION
	300756	TRANSFORMER IP00 100 VA (WITH SWITCH DISCONNECTOR) (FOR 220 AND 380V)	TRANSFORMADOR IP00 100 VA (CON INTERRUPTOR SECCIONADOR) (PARA 220 Y 380V)	TRANSFORMATEUR IP00 100 VA (AVEC INTERRUPTEUR SECTIONNER) (POUR 220 ET 380V)
	300772	TRANSFORMER IP00 100 VA (WITH SWITCH DISCONNECTOR) (FOR 240 AND 415V)	TRANSFORMADOR IP00 100 VA (CON INTERRUPTOR SECCIONADOR) (PARA 240 Y 415V)	TRANSFORMATEUR IP00 100 VA (AVEC INTERRUPTEUR SECTIONNER) (POUR 240 ET 415V)
28	183400	CYL.PLATE SCREW ST-4 20 C/AL	TOR.CHAPA ST-4 20 C/AL.T25	VIS PLAQUE CYL.ST-4 20 C/AL
29	160119	FUSE HOLDER REF.FEC 031 1631	PORTAFUSIBLES REF.FEC.031.1631	PORTE-FUSIBLE REF.FEC 031 1631
30	192286	BAYONET HEAD (FOR FUSE 5X20)	CABEZA BAYONETA FEK.031.1611 (PARA CARTUCHO 5X20)	TETE BAYONETTE (POUR CARTOUCHE 5X20)
	137661	BAYONET HEAD (FOR FUSE 6X32)	CABEZA BAYONETA FEK.031.1613 (PARA CARTUCHO 6X32)	TETE BAYONETTE (POUR CARTOUCHE 6X32)
31	302612	FUSE FSL 0034.3775 1A (FOR FUSE 5X20)	CART.FUSIB.FSL 0034.3775 1 A (PARA CARTUCHO 5X20)	CARTOUCHE FUSIBLE FSL 00343775 (POUR CARTOUCHE 5X20)
	182485	FUSE FST 0034.5225 1A (FOR FUSE 6X32)	CART.FUSIB.FST 0034.5225 1 A (PARA CARTUCHO 6X32)	CARTOUCHE FUS.FST 0034.5225 1A (POUR CARTOUCHE 6X32)
32	245571	CONTACTOR FIXING PROFILE	PERFIL FIJACION CONTACTORES	PROFILE FIXATION CONTACTEURS
33	146175	BICR CYL SCREW DIN84-4 M-5X10	TOR.CIL.DIN84-4.8 B.TRI.M 5X10	VIS CYL BICR DIN84-4.8.M-5X10
34	149534	BICR.WASHER B DIN125-ST 5,3	ARAN.B DIN125-ST B.TRI. 5,3	RONDELLE B BICR.DIN125-ST 5,3
35	139683	CONE ECPC-6	CONO HIMEL ECPC-6	CONE ECPC-6
37	146084	BICR CYL SCREW DIN84 M 4X 10	TOR.CIL.DIN84-4.8 B.TRI.M 4X10	VIS CYL BICR DIN84-4.8 M 4X 10
38	279836	CURRENT INPUT COVER (WITHOUT SWITCH DISCONNECTOR)	TAPA ENTRADA CORRIENTE (SIN INTERRUPTOR SECCIONADOR)	COUVERCLE ENTRÉE DE COURANT (SANS INTERRUPTEUR SECTIONNER)
39	155465	TERMINAL BC 10/16R 638455 (WITHOUT SWITCH DISCONNECTOR)	BORNA CIAMA BC 10/16R 638455 (SIN INTERRUPTOR SECCIONADOR)	BORNE BC 10/16R 638455 (SANS INTERRUPTEUR SECTIONNER)
40	193425	TERMINAL BCT 10 631912 (WITHOUT SWITCH DISCONNECTOR)	BORNA CIAMA BCT 10 631912 (SIN INTERRUPTOR SECCIONADOR)	BORNE BCT 10 631912 (SANS INTERRUPTEUR SECTIONNER)
41	277582	CURRENT INPUT COVER (WITH SWITCH DISCONNECTOR)	TAPA ENTRADA CORRIENTE (CON INTERRUPTOR SECCIONADOR)	COUVERCLE ENTRÉE DE COURANT (AVEC INTERRUPTEUR SECTIONNER)
42	198861	GRAL.SWITCH P1-25/V/SVB (WITH SWITCH DISCONNECTOR)	INTERRUPT.GENERAL P1-25/V/SVB (CON INTERRUPTOR SECCIONADOR)	INTERRUPTEUR GRAL.P1-25/V/SVB (AVEC INTERRUPTEUR SECTIONNER)
43	300400	AUX.CONTACT. HI11.P1/P3Z (WITH SWITCH DISCONNECTOR)	CONTACTO AUXILIAR HI11-P1/P3Z (CON INTERRUPTOR SECCIONADOR)	CONTACT.AUX.HI11-P1/P3Z (AVEC INTERRUPTEUR SECTIONNER)

info@zipnasklade.ru
8(800)500-69-51

Nº	REF.	DENOMINATION	DENOMINACIÓN	DÉNOMINATION
		FROM MACHINE Nº 661.969	A PARTIR DE LA MÁQUINA Nº 661.969	A PARTIR DE LA MACHINE Nº 661.969
4	326231	CONTACTOR 3RT10 17-1AP02	CONTACTOR 3RT10 17-1AP02	CONTACTEUR 3RT10 17-1AP02
	194050	CANCELLED	ANULADO	ANNULE
5	326298	AUX.CONTACT BLOCK3RH1911-1AA10	BLOQUE CONTAC.AUX3RH1911-1AA10	BLOC CONTACT AUX.3RH1911-1AA10

info@zipnasklade.ru
8(800)500-69-51

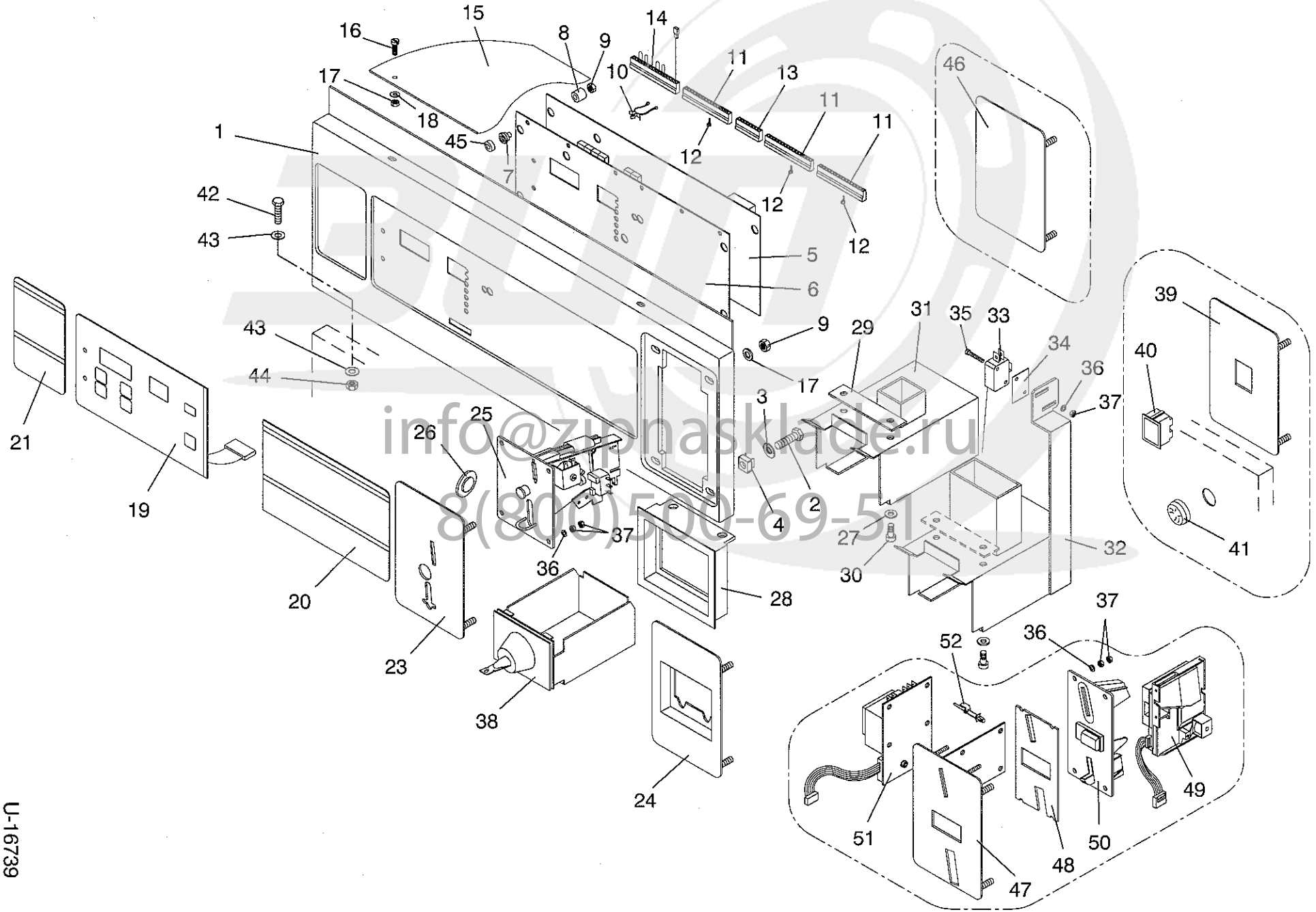

info@zipnasklade.ru
8(800)500-69-51

Nº	REF.	DENOMINATION	DENOMINACIÓN	DÉNOMINATION
1	280644	CONTROL PANEL	PANEL DE MANDOS	TABLEAU DE COMMANDES
2	144881	INOX HEX SCREW DIN933 M 6X16	TOR.EX.DIN933INOX A2-70 M 6X16	VIS HEX INOX DIN933 M 6X16
3	149310	INOX.A2 WASHER DIN125 6,4	ARAN. DIN125 INOX A2 6,4	RONDELLE INOX.A2 DIN125 6,4
4	165019	CAGED NUT M-6 0,5-1,5	TUER.ENJ.M6 0,5-1,5 R.310007-9	ECROU PRESIONER M-6 0,5-1,5
5	300798	PROCESSOR BOARD SM/CM	PLACA MICROPROCESADOR SM/CM	PLAQUE MICROPROCESSEUR SM/CM
	303354	EPROM FOR WASHER SM3/CM3 VER8	EPROM LAVADORAS SM3/CM3 VER08	EPROM P.MACH.A LAVER SM3/CM3V8
	303933	EEPROM ST24C04	EEPROM ST24C04	EEPROM ST24C04
	187203	INPUT OPTOISOLATOR 4N35	OPTOACOPLADOR ENTRADA 4N35	OPTOISOLATOR ENTREE 4N35
	187211	OUTPUT OPTOISOLATOR S21MD4V	OPTOACOPLADOR SALIDA	OPTOISOLATOR SORTIE S21MD4V
	188003	DISPLAY TDSR 5160	DISPLAY TDSR 5160	DISPLAY TDSR 5160
6	278317	PROCESSOR ISOLATOR	AISLANTE MICROPROCESADOR	ISOLANT MICROPROCESSEUR
7	277392	PLATE-CONTROL SEPARATOR	SEPARADOR PANEL-PLACA	SEPARATEUR TABLEAU-PLAQUE
8	277400	NUT-PLATE SEPARATOR	SEPARADOR PLACA-TUERCA	SEPARATEUR PLAQUE-ECROU
9	150185	BICR.HEX.NUT DIN934-8 M4	TUER.EX.DIN934-8 B.TRI.M 4	ECROU HEX.DIN934-8 BICR.M4
10	199893	CLAMP STL-450-3-01	ABRAZADERA STL-450-3-01	BRIDE STL-450-3-01
11	197301	PROTECTOR AMP-UNYT 1-640029-6	PROTECTOR AMP-UNYT 1-640029-6	PROTECTEUR AMP-UNYT 1-640029-6
12	197426	POLARIZATION AMP 640180-1	POSICIONADOR AMP 640180-1	POLARIZATION AMP 640180-1
13	199810	PROTECTOR AMP-UNYT 640029-8	PROTECTOR AMP-UNYT 640029-8	PROTECTEUR AMP-UNYT 640029-8
14	283648	IDENTIFICATION PLUG	CONECTORA IDENTIFICACION	CONNECTEUR IDENTIFICATION
15	258277	PROCESSOR BOARD LID	TAPA PLACA MICROPROCESADOR	COUVERCLE PLAQ.MICROPROCESSEUR
16	145649	INOX FLAT SCREW DIN85 M 4X10	TOR.PLA.DIN85 INOX A2-70 M4X10	VIS PLAT INOX DIN85 M-4X10 A2
17	219758	WASHER 12X4X1,5	ARANDELA 12X4X1,5	RONDELLE 12X4X1,5
18	132043	SELFBLOCKING NUT DIN985 M 4	TUER.AUTOBL.DIN985-8 B.TRI.M 4	ECROU AUTOBLOCANT DIN985 M 4
19	300681	WASHER KEYBOARD CM	TECLADO LAVADORA CM	CLAVIER LAVEUSE CM
20	301317	ENGLISH OPERATION INSTR.PLATE	PLACA INSTR.FUNCION. IN.	PLAQUE INST.FONCTION ANGLAIS
	301325	SPANISH OPERATION INSTR.PLATE	PLACA INSTR.FUNCION. ES.	PLAQUE INST.FONCTION ESPAGNOL
	301333	FRENCH OPERATION INSTR.PLATE	PLACA INSTR.FUNCION. FR.	PLAQUE INST.FONCTION FRANCAIS
	301341	GERMAN OPERATION INSTR.PLATE	PLACA INSTR.FUNCION. AL.	PLAQUE INST.FONCTION ALLEMAND
	301358	ITALIAN OPERATION INSTR.PLATE	PLACA INSTR.FUNCION. IT.	PLAQUE INST.FONCTION ITALIEN
	301366	PORTUGUESE OPERATION INST.PLAT	PLACA INSTR.FUNCION. PO.	PLAQUE INST.FONCTION PORTUGAIS

info@zipnasklade.ru
8(800)500-69-51

Nº	REF.	DENOMINATION	DENOMINACIÓN	DÉNOMINATION
	301374	DUTCH OPERATION INSTR.PLATE	PLACA INSTR.FUNCION. HO.	PLAQUE INST.FONCTION HOLLAND.
	301382	DANISH OPERATION INSTR.PLATE	PLACA INSTR.FUNCION. DA.	PLAQUE INST.FONCTION DANOIS
	301390	FINNISH OPERATION INSTR.PLATE	PLACA INSTR.FUNCION. FI.	PLAQUE INST.FONCTION FINLAND
	301408	NORWEGIAN OPERATION INSTR.PLAT	PLACA INSTR.FUNCION. NO.	PLAQUE INST.FONCTION NORVÉGE
	301416	SWEDISH OPERATION INSTR.PLATE	PLACA INSTR.FUNCION. SU.	PLAQUE INST.FONCTION SUÉDOIS
	301424	GREEK OPERATION INSTR.PLATE	PLACA INSTR.FUNCION. GR.	PLAQUE INST.FONCTION GREC
	301432	JAPENESE OPERATION INSTR.PLATE	PLACA INSTR.FUNCION. JA.	PLAQUE INST.FONCTION JAPONAIS
21	301069	ENGLISH SAFETY INSTR.PLATE	PLACA INSTR.SEGURIDAD IN.	PLAQUE INSTR.SECURITE ANGLAIS
	301077	SPANISH SAFETY INSTR.PLATE	PLACA INSTR.SEGURIDAD ES.	PLAQUE INSTR.SECURITE ESPAGNOL
	301085	FRENCH SAFETY INSTR.PLATE	PLACA INSTR.SEGURIDAD FR.	PLAQUE INSTR.SECURITE FRANCAIS
	301093	GERMAN SAFETY INSTR.PLATE	PLACA INSTR.SEGURIDAD AL.	PLAQUE INSTR.SECURITE ALLEMAND
	301101	ITALIAN SAFETY INSTR.PLATE	PLACA INSTR.SEGURIDAD IT.	PLAQUE INSTR.SECURITE ITALIEN
	301119	PORTUGUESE SAFETY INSTR.PLATE	PLACA INSTR.SEGURIDAD PO.	PLAQUE INST.SECURITE PORTUGAIS
	301127	DUTCH SAFETY INSTR.PLATE	PLACA INSTR.SEGURIDAD HO.	PLAQUE INSTR.SECURITE HOLLAND.
	301135	DANISH SAFETY INSTR.PLATE	PLACA INSTR.SEGURIDAD DA.	PLAQUE INSTR.SAFETY DANOIS
	301143	FINNISH SAFETY INSTR.PLATE	PLACA INSTR.SEGURIDAD FI.	PLAQUE INSTR.SECURITE FINLAND.
	301150	NORWEGIAN SAFETY INSTR.PLATE	PLACA INSTR.SEGURIDAD NO.	PLAQUE INST.SECURITE NORVÉGIEN
	301168	SWEDISH SAFETY INSTR.PLATE	PLACA INSTR.SEGURIDAD SU.	PLAQUE INSTR.SECURITE SUÉDOIS
	301176	GREEK SAFETY INSTR.PLATE	PLACA INSTR.SEGURIDAD GR.	PLAQUE INSTR.SECURITE GREC
	301184	JAPENESE SAFETY INSTR.PLATE	PLACA INSTR.SEGURIDAD JA.	PLAQUE INSTR.SECURITE JAPONAIS
23	278333	COIN METER PLATE (EXCEPT GREENWALD COIN METER)	PLACA MONEDERO (EXCEPTO MONEDERO GREENWALD)	PLAQUE MONNAYEUR (SAUF MONNAYEUR GREENWALD)
24	281162	COIN-METER PLATE (FOR GREENWALD COIN-METER)	PLACA MONEDERO (PARA MONEDERO GREENWALD)	PLAQUE MONNAYEUR (POUR MONNAYEUR GREENWALD
25	130831	COIN-METER B-400 TOKEN GIRBAU	MONEDERO ISMEA B-400 FICHA G.	MONNAYEUR B-400 JETON GIRBAU
		OTHER COIN-METERS B-400 (TO SPECIFY COIN)	OTROS MONEDEROS B-400 (ESPECIFICAR MONEDA)	AUTRES MONNAYEURS B-400 (SPECIFIER MONNAI)
	182295	COIN-METER ELECTROMAGNET B-400	ELECT.MONE.ISMEA B400 220V ZZ	ELECTROAIMANT MONNAYEUR B-400
	177022	COIN-METER MICROSWITCH B400	MICRORRUP.MONEDERO ISMEA B400	MICRORRUPTEUR MONNAYEUR B400
26	147710	TOKEN GIRBAU 24R15	FICHA 24R15 CON ANAGRAM.GIRBAU	JETON GIRBAU 24R15
27	149476	BICR.WASHER B DIN125-ST 4,3	ARAN.B DIN125-ST B.TRI. 4,3	RONDELLE B DIN125-ST BICR.4,3

info@zipnasklade.ru
8(800)500-69-51

Nº	REF.	DENOMINATION	DENOMINACIÓN	DÉNOMINATION
28	258665	COIN BOX PLATE	CARATULA CAJON MONEDAS	PLAQUE BOITE MONNAIES
29	280768	BOX BRACKET FIXING	SUJECION APOYO CAJON	FIXATION APPUI BOITE
30	161646	ALLEN SCREW DIN 912 M-4X8	TOR.ALLDIN912-8.8 B.TRI.M 4X 8	VIS ALLEN DIN 912 M-4X8
31	281170	BOX SUPPORT (EXCEPT GREENWALD COIN METER)	APOYO CAJON (EXCEPTO MONEDERO GREENWALD)	APPUI BOITE (SAUF MONNAYEUR GREENWALD)
32	284083	BOX SUPPORT (FOR GREENWALD COIN-METER)	APOYO CAJON RECOGEMONEDAS (PARA MONEDERO GREENWALD)	APPUI BOX (POUR MONNAYEUR GREENWALD
33	284208	COIN-METER MICROSWITCH (FOR GREENWALD COIN-METER)	MICRORRUPTOR MONEDERO (PARA MONEDERO GREENWALD)	MICRORRUPTEUR MONNAYEUR (POUR MONNAYEUR GREENWALD
34	244327	MICROSWITCH ISOLATION	AISLANTE MICRORRUPTOR	ISOLANT MICRORRUPTEUR
35	146050	BICR CYL SCREW DIN84 M-3X20	TOR.CIL.DIN84-4.8 B.TRI.M 3X20	VIS CYL BICR DIN84-4.8 M 3X20
36	149484	BICR.WASHER B DIN125-ST 3,2	ARAN.B DIN125-ST B.TRI. 3,2	RONDELLE B.DIN125-ST BICR. 3,2
37	149906	INOX. HEX. NUT DIN 934 M-3	TUER.EX.DIN934 INOX A2-70 M 3	ECROU HEX. INOX DIN934 M-3
38	169169	COIN BOX UG400A GI	CAJA MONEDAS UG400A GI	BOITE MONNAIE UG400A GI
39	279745	PUSH-BUTTON PLATE	PLACA PULSADOR	PLAQUE PULSATEUR
40	138339	PUSH-BUTTON 2WIXII/5518	PULSADOR 2WIXII/5518	BOUTON-POUSSOIR 2WIXII/5518
41	160101	THERMOSTAT INTAKE STOPPER	TAPON TOMA TERMOSTATO	BOUCHON PRISE THERMOSTAT
42	146274	BICR.HEX SCREW DIN933-8 M-5X10	TOR.EX.DIN933-8.8 B.TRI.M 5X10	VIS HEX.BICR.DIN933-8.8 M-5X10
43	149534	BICR.WASHER B DIN125-ST 5,3	ARAN.B DIN125-ST B.TRI. 5,3	RONDELLE B BICR.DIN125-ST 5,3
44	150177	BICR HEX NUT DIN934-8 M5	TUER.EX.DIN934-8 B.TRI.M 5	ECROU HEX DIN934-8 BIC.M5
45	279901	SEPARATOR WASHER	ARANDELA SEPARADOR	RONDELLE SEPARATEUR

info@zipnasklade.ru
8(800)500-69-51

Nº	REF.	DENOMINATION	DENOMINACIÓN	DÉNOMINATION
		FROM MACHINE Nº 660.107	A PARTIR DE LA MÁQUINA Nº 660.107	A PARTIR DE LA MACHINE Nº 660.107
28	284216	COIN BOX PLATE	CARATULA CAJON MONEDAS	PLAQUE BOITE MONNAIES

info@zipnasklade.ru
8(800)500-69-51

Nº	REF.	DENOMINATION	DENOMINACIÓN	DÉNOMINATION
		FROM MACHINE Nº 661.969	A PARTIR DE LA MÁQUINA Nº 661.969	A PARTIR DE LA MACHINE Nº 661.969
23	281121	COIN-METER PLATE (EXCEPT GREENWALD COIN METER)	PLACA MONEDERO (EXCEPTO MONEDERO GREENWALD)	PLAQUE MONNAYEUR (SAUF MONNAYEUR GREENWALD)
	278333	CANCELLED	ANULADO	ANNULE
25	338970	COIN-METER D10.WK TOKEN GIRBAU	MONEDERO D10.WK FICHA GIR.	MONNAYEUR D10.WK JETON GIRBAU
	130831	CANCELLED	ANULADO	ANNULE
	177022	CANCELLED	ANULADO	ANNULE
	182295	CANCELLED	ANULADO	ANNULE
46	278358	PLATE	PLACA CIEGA	PLAQUE
47	289769	COIN-METER PLATE (FOR PROGRAMMABLE COIN.METER)	PLACA MONEDERO (PARA MONEDERO PROGRAMABLE)	PLAQUE MONNAYEUR (POUR MONNAYEUR PROGRAMMABLE)
48	291310	COIN-METER PLATE SUPPLEMENT (FOR PROGRAMMABLE COIN.METER)	SUPLEMENTO PLACA MONEDERO (PARA MONEDERO PROGRAMABLE)	SUPPLEMENT PLAQUE MONNAYEUR (POUR MONNAYEUR PROGRAMMABLE)
49	306829	SELF-PROGRAMMABLE COIN-METER (TO SPECIFY COINS)	MONEDERO AUTO-PROGRAM.RM5F00 (ESPECIFICAR MONEDAS)	MONNAYEUR SELF-PROGRAMMABLE (SPECIFIER MONNAIES)
50	306837	SELF-PROGRAM.COIN-METER FRONT (FOR PROGRAMMABLE COIN.METER)	FRONTAL MONED.AUTO-PROGR.RMF6 (PARA MONEDERO PROGRAMABLE)	FRONTAL MONNAYEUR SELF-PROGRAM (POUR MONNAYEUR PROGRAMMABLE)
51	306589	AUX. SUPPLY PLATE RM4-A (FOR PROGRAMMABLE COIN.METER)	PLACA ALIMENTACION AUX.RM4-A (PARA MONEDERO PROGRAMABLE)	PLAQUE ALIMENTR.AUX.RM4-A (POUR MONNAYEUR PROGRAMMABLE)
52	303255	END BRACKET EHCBS-12-01 (FOR PROGRAMMABLE COIN.METER)	SOPORTE EXTREMO EHCBS-12-01 (PARA MONEDERO PROGRAMABLE)	SUPPORT FINAL EHCBS-12-01 (POUR MONNAYEUR PROGRAMMABLE)

info@zipnasklade.ru
8(800)500-69-51

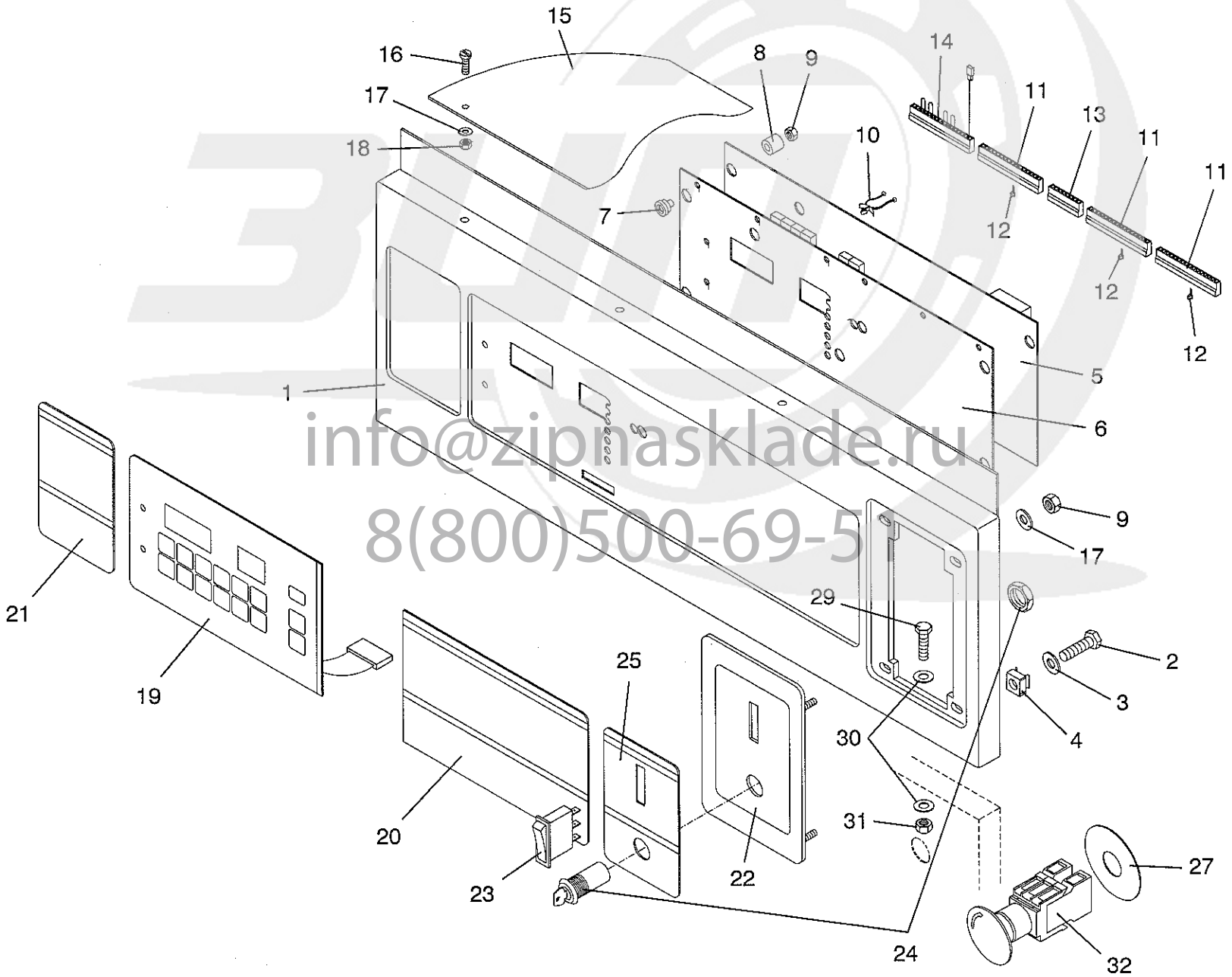

info@zipnasklade.ru
8(800)500-69-5

LS-307 (10)

U-11908

Nº	REF.	DENOMINATION	DENOMINACIÓN	DÉNOMINATION
1	280644	CONTROL PANEL	PANEL DE MANDOS	TABLEAU DE COMMANDES
2	144881	INOX HEX SCREW DIN933 M 6X16	TOR.EX.DIN933INOX A2-70 M 6X16	VIS HEX INOX DIN933 M 6X16
3	149310	INOX.A2 WASHER DIN125 6,4	ARAN. DIN125 INOX A2 6,4	RONDELLE INOX.A2 DIN125 6,4
4	165019	CAGED NUT M-6 0,5-1,5	TUER.ENJ.M6 0,5-1,5 R.310007-9	ECROU PRESIONER M-6 0,5-1,5
5	300806	PROCESSOR BOARD PM	PLACA MICROPROCESADOR PM	PLAQUE MICROPROCESSEUR PM
	303347	EPROM FOR WASHER PM3 VER05	EPROM LAVADORAS PM3 VER05	EPROM POUR MACH.A LAVER PM3 V4
	187195	RAM ZERO POWER MK48Z08-10	RAM ZERO POWER MK48Z08-10	RAM ZERO POWER MK48Z08-10
	187203	INPUT OPTOISOLATOR 4N35	OPTOACOPLADOR ENTRADA 4N35	OPTOISOLATOR ENTREE 4N35
	187211	OUTPUT OPTOISOLATOR S21MD4V	OPTOACOPLADOR SALIDA	OPTOISOLATOR SORTIE S21MD4V
	188003	DISPLAY TDSR 5160	DISPLAY TDSR 5160	DISPLAY TDSR 5160
6	278317	PROCESSOR ISOLATOR	AISLANTE MICROPROCESADOR	ISOLANT MICROPROCESSEUR
7	277392	PLATE-CONTROL SEPARATOR	SEPARADOR PANEL-PLACA	SEPARATEUR TABLEAU-PLAQUE
8	277400	NUT-PLATE SEPARATOR	SEPARADOR PLACA-TUERCA	SEPARATEUR PLAQUE-ECROU
9	150185	BICR.HEX.NUT DIN934-8 M4	TUER.EX.DIN934-8 B.TRI.M 4	ECROU HEX.DIN934-8 BICR.M4
10	199893	CLAMP STL-450-3-01	ABRAZADERA STL-450-3-01	BRIDE STL-450-3-01
11	197301	PROTECTOR AMP-UNYT 1-640029-6	PROTECTOR AMP-UNYT 1-640029-6	PROTECTEUR AMP-UNYT 1-640029-6
12	197426	POLARIZATION AMP 640180-1	POSICIONADOR AMP 640180-1	POLARIZATION AMP 640180-1
13	199810	PROTECTOR AMP-UNYT 640029-8	PROTECTOR AMP-UNYT 640029-8	PROTECTEUR AMP-UNYT 640029-8
14	283655	IDENTIFICATION PLUG	CONECTORA IDENTIFICACION	CONNECTEUR IDENTIFICATION
15	258277	PROCESSOR BOARD LID	TAPA PLACA MICROPROCESADOR	COUVERCLE PLAQ.MICROPROCESSEUR
16	145649	INOX FLAT SCREW DIN85 M 4X10	TOR.PLA.DIN85 INOX A2-70 M4X10	VIS PLAT INOX DIN85 M-4X10 A2
17	219758	WASHER 12X4X1,5	ARANDELA 12X4X1,5	RONDELLE 12X4X1,5
18	132043	SELFBLOCKING NUT DIN985 M 4	TUER.AUTOBL.DIN985-8 B.TRI.M 4	ECROU AUTOBLOCANT DIN985 M 4
19	300673	WASHER KEYBOARD PM	TECLADO LAVADORA PM	CLAVIER LAVEUSE PM
20	301440	ENGLISH OPERATION INSTR.PLATE	PLACA INSTR.FUNCION. IN.	PLAQUE INSTR.FONCTION ANGLAIS
	301457	SPANISH OPERATION INSTR.PLATE	PLACA INSTR.FUNCION. ES.	PLAQUE INSTR.FONCTION ESPAGNOL
	301465	FRENCH OPERATION INSTR.PLATE	PLACA INSTR.FUNCION. FR.	PLAQUE INSTR.FONCTION FRANCAIS
	301473	GERMAN OPERATION INSTR.PLATE	PLACA INSTR.FUNCION. AL.	PLAQUE INSTR.FONCTION ALLEMAND
	301481	ITALIAN OPERATION INSTR.PLATE	PLACA INSTR.FUNCION. IT.	PLAQUE INSTR.FONCTION ITALIEN
	301499	PORTUGUESE OPERATION INST.PLAT	PLACA INSTR.FUNCION. PO.	PLAQUE INST.FONCTION PORTUGAIS

info@zipnasklade.ru
8(800)500-69-51

Nº	REF.	DENOMINATION	DENOMINACIÓN	DÉNOMINATION
	301507	DUTCH OPERATION INSTR.PLATE	PLACA INSTR.FUNCION. HO.	PLAQUE INSTR.FONCTION HOLLAND.
	301515	DANISH OPERATION INSTR.PLATE	PLACA INSTR.FUNCION. DA.	PLAQUE INSTR.FONCTION DANOIS
	301523	FINNISH OPERATION INSTR.PLATE	PLACA INSTR.FUNCION. FI.	PLAQUE INSTR.FONCTION FINLAND.
	301531	NORWEGIAN OPERATION INSTR.PLAT	PLACA INSTR.FUNCION. NO.	PLAQUE INSTR.FONCTION NORVÉG.
	301549	SWEDISH OPERATION INSTR.PLATE	PLACA INSTR.FUNCION. SU.	PLAQUE INSTR.FONCTION SUÉDOIS
	301556	GREEK OPERATION INSTR.PLATE	PLACA INSTR.FUNCION. GR.	PLAQUE INSTR.FONCTION GREC
	301564	JAPENESE OPERATION INSTR.PLATE	PLACA INSTR.FUNCION. JA.	PLAQUE INSTR.FONCTION JAPONAIS
21	301069	ENGLISH SAFETY INSTR.PLATE	PLACA INSTR.SEGURIDAD IN.	PLAQUE INSTR.SECURITE ANGLAIS
	301077	SPANISH SAFETY INSTR.PLATE	PLACA INSTR.SEGURIDAD ES.	PLAQUE INSTR.SECURITE ESPAGNOL
	301085	FRENCH SAFETY INSTR.PLATE	PLACA INSTR.SEGURIDAD FR.	PLAQUE INSTR.SECURITE FRANCAIS
	301093	GERMAN SAFETY INSTR.PLATE	PLACA INSTR.SEGURIDAD AL.	PLAQUE INSTR.SECURITE ALLEMAND
	301101	ITALIAN SAFETY INSTR.PLATE	PLACA INSTR.SEGURIDAD IT.	PLAQUE INSTR.SECURITE ITALIEN
	301119	PORTUGUESE SAFETY INSTR.PLATE	PLACA INSTR.SEGURIDAD PO.	PLAQUE INST.SECURITE PORTUGAIS
	301127	DUTCH SAFETY INSTR.PLATE	PLACA INSTR.SEGURIDAD HO.	PLAQUE INSTR.SECURITE HOLLAND.
	301135	DANISH SAFETY INSTR.PLATE	PLACA INSTR.SEGURIDAD DA.	PLAQUE INSTR.SAFETY DANOIS
	301143	FINNISH SAFETY INSTR.PLATE	PLACA INSTR.SEGURIDAD FI.	PLAQUE INSTR.SECURITE FINLAND.
	301150	NORWEGIAN SAFETY INSTR.PLATE	PLACA INSTR.SEGURIDAD NO.	PLAQUE INST.SECURITE NORVÉGIEN
	301168	SWEDISH SAFETY INSTR.PLATE	PLACA INSTR.SEGURIDAD SU.	PLAQUE INSTR.SECURITE SUÉDOIS
	301176	GREEK SAFETY INSTR.PLATE	PLACA INSTR.SEGURIDAD GR.	PLAQUE INSTR.SECURITE GREC
	301184	JAPENESE SAFETY INSTR.PLATE	PLACA INSTR.SEGURIDAD JA.	PLAQUE INSTR.SECURITE JAPONAIS
22	277384	MICRO SUPPLEMENT PANEL	PANEL SUPLEMENTO MICRO.	PANNEAU SUPPLEMENT MICRO
23	300780	SWITCH 1WIXII/3359 WHITE	INTER.PILOTO 1WIXII/3359 BLANC	INTERRUPTEUR 1WIXII/3359 BLANC
24	256230	FUNCTION SWITCH	CONMUTADOR FUNCIONES	COMMUTATEUR FONCTIONS
25	301994	GENERAL CONTROL PLATE	PLACA MANDOS GENERALES	PLAQUE COMMANDES GENERALES
26	192310	MUSHROOM PUSH-BUTTON	PUL.HONGO ENCL.3SB10 (341529)	PULSATEUR TYPE COUP DE POING
27	192294	YELLOW RING	ARO AMARILLO	BAGUE JAUNE
28	197343	CONNECTION ELEMENT 3SB13 20-0A	ELEMENTO CONEXION 3SB13 20-0A	ELEMENT CONNEXION 3SB13 20-0A
29	146274	BICR.HEX SCREW DIN933-8 M-5X10	TOR.EX.DIN933-8.8 B.TRI.M 5X10	VIS HEX.BICR.DIN933-8.8 M-5X10
30	149534	BICR.WASHER B DIN125-ST 5,3	ARAN.B DIN125-ST B.TRI. 5,3	RONDELLE B BICR.DIN125-ST 5,3
31	150177	BICR HEX NUT DIN934-8 M5	TUER.EX.DIN934-8 B.TRI.M 5	ECROU HEX DIN934-8 BIC.M5

info@zipnasklade.ru
8(800)500-69-51

Nº	REF.	DENOMINATION	DENOMINACIÓN	DÉNOMINATION
		FROM MACHINE Nº 660.001	A PARTIR DE LA MÁQUINA Nº 660.001	A PARTIR DE LA MACHINE Nº 660.001
26	192310	CANCELLED	ANULADO	ANNULE
28	197343	CANCELLED	ANULADO	ANNULE
32	341529	EMERGENCY STOP LC	PARO EMERGENCIA LC	ARRET EMERGENCE LC

info@zipnasklade.ru
8(800)500-69-51

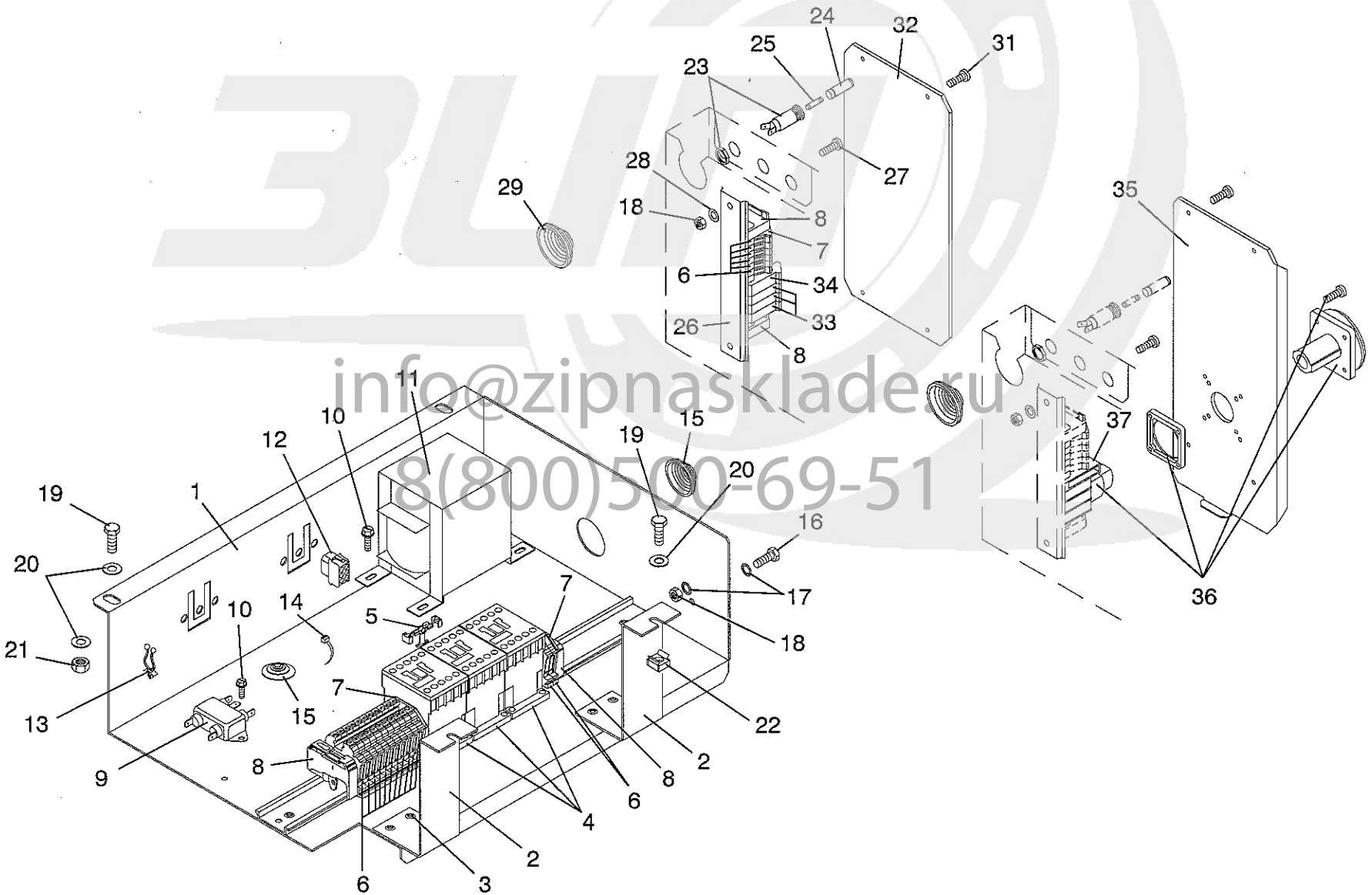

info@zipnasklade.ru
8(800)500-69-51

Nº	REF.	DENOMINATION	DENOMINACIÓN	DÉNOMINATION
1	271742	INSTALLATION BOX PLATE	PLACA CAJA INSTALACION	PLAQUE BOITE INSTALLATION
2	276550	INSTALLATION BOX BRACKET	SOPORTE CAJA INSTALACION	SUPPORT BOITE INSTALLATION
3	151878	RIVET POP TLP/D/636/BS4,8X 9,1	REMA.POP TLP/D/636/BS 4,8X 9,1	RIVET TLP/D/636/BS 4,8X 9,1
4	193441	CONTACTOR 3TF30 01-OAN2	CONTACTOR 3TF30 01-OAN2 ZZ	CONTACTEUR 3TF30 01-OAN2
	194050	COIL 3TY7 403-OAN2	BOBINA 3TY7 403-OAN2 ZZ	BOBINE 3TY7 403-OAN2
5	196592	CONTACT BLOCK 3TX4 091-1A	BLOQUEO 3TX4 091-1A ZZ	BLOC CONTACT 3TX4 091-1A
6	155457	TERMINAL BC 4/6 R 638255	BORNA CIAMA BC 4/6 R 638255	BORNE BC 4/6 R 638255
7	155275	END COVER FC2 5/10	TAPA FIN.CIAMA FC2.5/10 635455	COUVERCLE FINAL FC2.5/10
8	142331	FIXING CLAMP	TOPE FIJAC.S/BORDES R.LEG39400	BRIDE FIXATION
9	199836	FILTER FRI FA-1Z	FILTRO DE RED RFI TIPO FA-1Z	FILTRE RFI FA-1Z
10	183400	CYL.PLATE SCREW ST-4 20 C/AL	TOR.CHAPA ST-4 20 C/AL.T25	VIS PLAQUE CYL.ST-4 20 C/AL
11	300756	TRANSFORMER IP00 100 VA (FOR 220 AND 380V)	TRANSFORMADOR IP00 100 VA (PARA 220 Y 380V)	TRANSFORMATEUR IP00 100 VA (POUR 220 ET 380V)
	300772	TRANSFORMER IP00 100 VA (FOR 200,240 AND 415V)	TRANSFORMADOR IP00 100 VA (PARA 200,240 Y 415V)	TRANSFORMATEUR IP00 100 VA (POUR 200,240 ET 415V)
	300764	TRANSFORMER IP00 100 VA (FOR 208 AND 440V)	TRANSFORMADOR IP00 100 VA (PARA 208 Y 440V)	TRANSFORMATEUR IP00 100 VA (POUR 208 ET 440V)
12	139444	PROTECTOR 1/480705-0	PROTECTOR 1/480705-0	PROTECTEUR 1/480705-0
13	199893	CLAMP STL-450-3-01	ABRAZADERA STL-450-3-01	BRIDE STL-450-3-01
14	140434	CLAMP 2221	BRIDA UNEX 2221	BRIDE 2221
15	181701	LEGRAND CONE 91911	CONO LEGRAND 91911	CONE LEGRAND 91911
16	146282	BICR.HEX SCREW DIN933-8 M 5X15	TOR.EX.DIN933-8.8 B.TRI.M 5X15	VIS HEX BICR.DIN933-8.8 M 5X15
17	149724	BICR EXT.TOOT.WASH.DIN6798 M5	ARAN.DEN.EXT.B.TRI.DIN6798M 5	RONDEL DEN.EX.BICR.DIN6798 M5
18	150177	BICR HEX NUT DIN934-8 M5	TUER.EX.DIN934-8 B.TRI.M 5	ECROU HEX DIN934-8 BIC.M5
19	146233	BICR.HEX SCREW DIN933-8 M6X15	TOR.EX.DIN933-8.8 B.TRI.M 6X15	VIS HEX DIN933-8.8 BICR.M6X15
20	149526	BICR.WASHER B DIN125-ST 6,4	ARAN.B DIN125-ST B.TRI. 6,4	RONDELLE B DIN125-ST BICR.6,4
21	150227	BICR HEX NUT DIN934-8 M6	TUER.EX.DIN934-8 B.TRI.M 6	ECROU HEX DIN934-8 BICR.M6
22	165019	CAGED NUT M-6 0,5-1,5	TUER.ENJ.M6 0,5-1,5 R.310007-9	ECROU PRESIONER M-6 0,5-1,5
23	160119	FUSE HOLDER REF.FEC 031 1631	PORTAFUSIBLES REF.FEC.031.1631	PORTE-FUSIBLE REF.FEC 031 1631
24	192286	BAYONET HEAD (FOR FUSE 5X20)	CABEZA BAYONETA FEK.031.1611 (PARA CARTUCHO 5X20)	TETE BAYONETTE (POUR CARTOUCHE 5X20)

info@zipnasklade.ru
8(800)500-69-51

Nº	REF.	DENOMINATION	DENOMINACIÓN	DÉNOMINATION
	137661	BAYONET HEAD (FOR FUSE 6X32)	CABEZA BAYONETA FEK.031.1613 (PARA CARTUCHO 6X32)	TETE BAYONETTE (POUR CARTOUCHE 6X32)
25	302612	FUSE FSL 0034.3775 1A (FOR FUSE 5X20)	CART.FUSIB.FSL 0034.3775 1 A (PARA CARTUCHO 5X20)	CARTOUCHE FUSIBLE FSL 00343775 (POUR CARTOUCHE 5X20)
	182485	FUSE FST 0034.5225 1A (FOR FUSE 6X32)	CART.FUSIB.FST 0034.5225 1 A (PARA CARTUCHO 6X32)	CARTOUCHE FUS.FST 0034.5225 1A (POUR CARTOUCHE 6X32)
26	245571	CONTACTOR FIXING PROFILE	PERFIL FIJACION CONTACTORES	PROFILE FIXATION CONTACTEURS
27	146175	BICR CYL SCREW DIN84-4 M-5X10	TOR.CIL.DIN84-4.8 B.TRI.M 5X10	VIS CYL BICR DIN84-4.8.M-5X10
28	149534	BICR.WASHER B DIN125-ST 5,3	ARAN.B DIN125-ST B.TRI. 5,3	RONDELLE B BICR.DIN125-ST 5,3
29	139683	CONE ECPC-6	CONO HIMEL ECPC-6	CONE ECPC-6
31	146084	BICR CYL SCREW DIN84 M 4X 10	TOR.CIL.DIN84-4.8 B.TRI.M 4X10	VIS CYL BICR DIN84-4.8 M 4X 10
32	279836	CURRENT INPUT COVER (WITHOUT SWITCH DISCONNECTOR)	TAPA ENTRADA CORRIENTE (SIN INTERRUPTOR SECCIONADOR)	COUVERCLE ENTRÉE DE COURANT (SANS INTERRUPTEUR SECTIONNER)
33	155465	TERMINAL BC 10/16R 638455 (WITHOUT SWITCH DISCONNECTOR)	BORNA CIAMA BC 10/16R 638455 (SIN INTERRUPTOR SECCIONADOR)	BORNE BC 10/16R 638455 (SANS INTERRUPTEUR SECTIONNER)
34	193425	TERMINAL BCT 10 631912 (WITHOUT SWITCH DISCONNECTOR)	BORNA CIAMA BCT 10 631912 (SIN INTERRUPTOR SECCIONADOR)	BORNE BCT 10 631912 (SANS INTERRUPTEUR SECTIONNER)
35	277582	CURRENT INPUT COVER (WITH SWITCH DISCONNECTOR)	TAPA ENTRADA CORRIENTE (CON INTERRUPTOR SECCIONADOR)	COUVERCLE ENTRÉE DE COURANT (AVEC INTERRUPTEUR SECTIONNER)
36	198861	GRAL.SWITCH P1-25/V/SVB (WITH SWITCH DISCONNECTOR)	INTERRUPT.GENERAL P1-25/V/SVB (CON INTERRUPTOR SECCIONADOR)	INTERRUPTEUR GRAL.P1-25/V/SVB (AVEC INTERRUPTEUR SECTIONNER)
37	300400	AUX.CONTACT. HI11.P1/P3Z (WITH SWITCH DISCONNECTOR)	CONTACTO AUXILIAR HI11-P1/P3Z (CON INTERRUPTOR SECCIONADOR)	CONTACT.AUX.HI11-P1/P3Z (AVEC INTERRUPTEUR SECTIONNER)

info@zipnasklade.ru
8(800)500-69-51

Nº	REF.	DENOMINATION	DENOMINACIÓN	DÉNOMINATION
		FROM MACHINE Nº 661.969	A PARTIR DE LA MÁQUINA Nº 661.969	A PARTIR DE LA MACHINE Nº 661.969
4	326231	CONTACTOR 3RT10 17-1AP02	CONTACTOR 3RT10 17-1AP02	CONTACTEUR 3RT10 17-1AP02
	194050	CANCELLED	ANULADO	ANNULE
5	327841	CONTACT BLOCK 3RA19 12-2H	BLOQUEO 3RA19 12-2H	BLOC CONTCAT 3RA19 12-2H

info@zipnasklade.ru
8(800)500-69-51

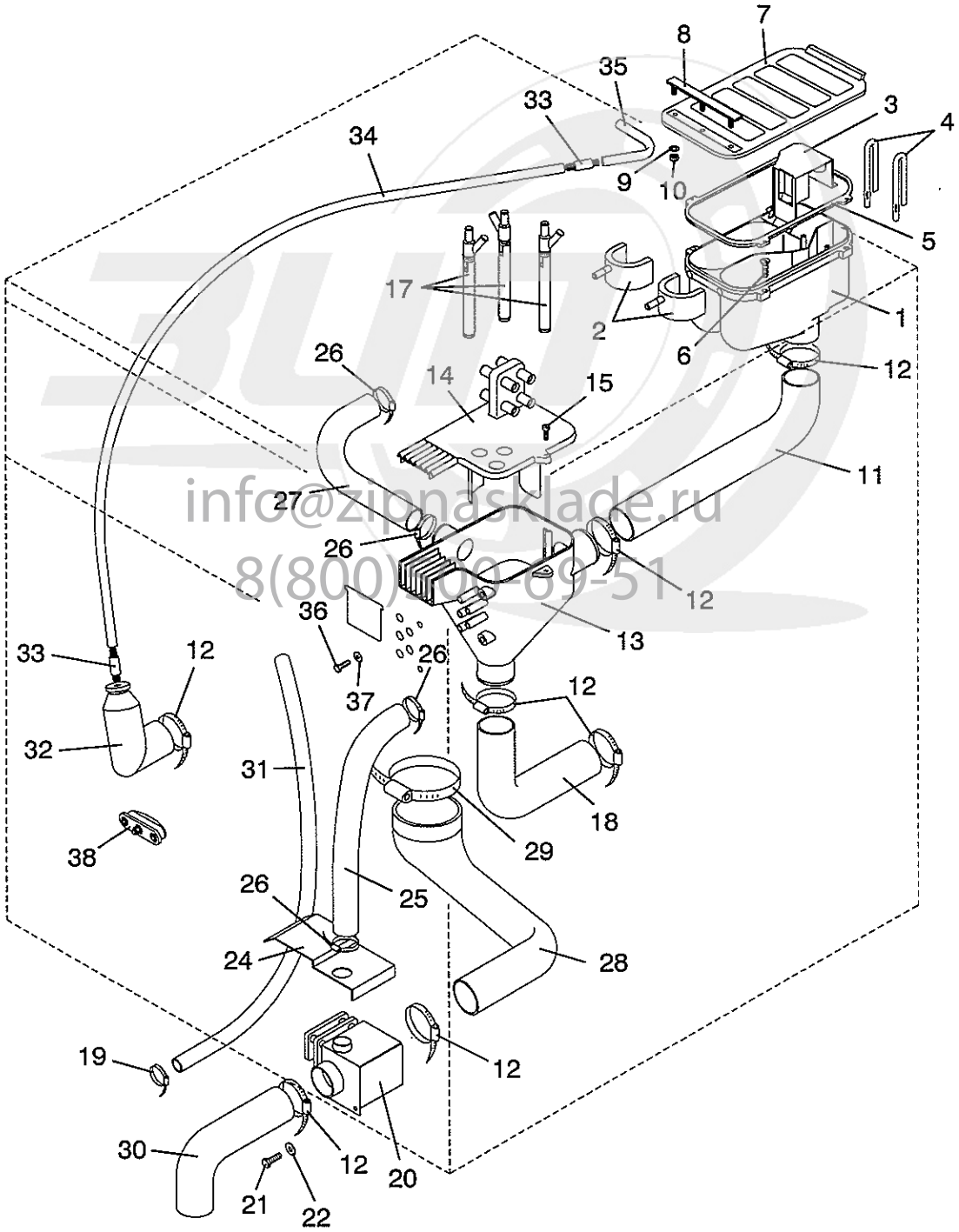

info@zipnasklade.ru
8(800) 06 69 51

LS-307 280511B 12A

Nº	REF.	DENOMINATION	DENOMINACIÓN	DÉNOMINATION
1	187385	SOAP DISPENSER	DOSIFICADOR	BAC A PRODUITS
2	187419	WATER INLET	ENTRADA AGUA	ENTREE EAU
3	187427	SOAP DISPENSER HOOD	CAPUCHON DOSIFICADOR	POCHE BAC A PRODUITS
4	187435	ASPIRATION HOSE	TUBO ASPIRACION	TUBE ASPIRATION
5	246298	SOAP DISPENSER GASKET	JUNTA DOSIFICADOR	JOINT BACS A PRODUITS
6	144741	INOX SCREW DIN 963 M-5X16 A270	TOR.AV.DIN963 INOX A2-70 M5X16	VIS INOX. DIN 963 M-5X16 A2-70
7	189951	SOAP DISPENSER LID	TAPA DOSIFICADOR	COUVERCLE BAC A PRODUITS
8	261420	SOAP DISPENSER LID FIX.PIECE	SOLAPA TAPA DOSIFICADOR	PIECE FIXATION COUVERCLE BAC
9	149369	INOX A2 WASHER DIN 125 5,3	ARAN. DIN125 INOX A2 5,3	RONDELLE INOX A2 DIN 125 5,3
10	176826	SELF-BLOCKING NUT DIN 985 M-5	TUER.AUTOBL.DIN985-8 B.TRI.M5	ECROU AUTOBLOCANT DIN 985 M-5
11	277749	RUBBER ELBOW D58X275X115	CODO GOMA D58X275X115	COUDE GOMME D58X275X115
12	132290	CLAMP 301508-9 D50-70	ABRAZADERA 50- 70	BRIDE 301508-9 D50-70
13	300061	DISTRIBUTOR BODY	CUERPO DISTRIBUIDOR	CORPS DISTRIBUTEUR
14	300186	DISTRIBUTOR COVER	TAPA DISTRIBUIDOR	COUVERCLE DISTRIBUTEUR
15	166645	CYL.PLATE SCREW DIN7971 8X5/8"	TOR.CHAPA CILI.DIN7971 8X5/8"	VIS PLAQUE CIL.DIN7971 8X5/8"
17	199885	WATER INLET RACCORD	RACOR ENTRADA AGUA	RACCORD ENTREE EAU
18	199620	RUBBER ELBOW D60X200X170	CODO GOMA D60X200X170	COUDE GOMME D60X200X170
19	156109	CLAMP 16-27	ABRAZADERA 16- 27	BRIDE 16-27
20	251835	DRAIN (OPEN WITHOUT POWER)	DESAGUE(ABIERTO A F.DE CORR.)	VIDANGE (NORMALEMENT OUVERTE)
	159764	MOTOR AND GEAR-BOX RE. 453R	MOTOR-REDUCTOR 453R 0,24AMP.	MOTEUR ET REDUCTEUR REF. 453R
	159731	OPERATING SPRING RE.408L	MUELLE ACCIONAMIENTO REF.408L	RESSORT ACTIONNEMENT REF. 408L
	163394	TIGHTNESS SEAL RE. 311VP	RETEN ESTANQUEIDAD REF.VP311	RESERVE ETACHEITE REF. 311VP
	132530	DRAIN BODY RE 811-SO 2"	CUERPO DESAGUE REF.811-SO 2"	CORPS VIDANGE REF. 811-SO 2"
	166553	MOTOR FIXING PLATE REF. 304Z	PLACA FIJACION MOTOR REF.304Z	PLAQUE FIXATION MOTEUR 304Z
	166611	MOTOR FIXING PLATE SCREW	TORNILLO PLACA FIJAC.REF.306	VIS PLAQUE FIXATION MOTEUR
	166595	MOTOR PLATE FIXING SCREW 320C	TORNILLO FIJACION REF.320C	VIS FIXATION 320C
	166603	CYL PLATE SCREW DIN7971 8X2"	TOR.CHAPA CILI.DIN7971 8X2"	VIS PLAQUE CYL DIN7971 8X2"
	166587	OPERATING SHAFT REF. 713	EJE ACCIONAMIENTO REF.713	AXE ACTIONNEMENT REF. 713
	166629	OPERATIN SHAFT WASHER 823	ARANDELA EJE ACCIONAM. REF.823	RONDELLE AXE ACTIONNEMENT 823
21	146233	BICR.HEX SCREW DIN933-8 M6X15	TOR.EX.DIN933-8.8 B.TRI.M 6X15	VIS HEX DIN933-8.8 BICR.M6X15

info@zipnasklade.ru
8(800)500-69-51

Nº	REF.	DENOMINATION	DENOMINACIÓN	DÉNOMINATION
22	149526	BICR.WASHER B DIN125-ST 6,4	ARAN.B DIN125-ST B.TRI. 6,4	RONDELLE B DIN125-ST BICR.6,4
24	251827	DRAIN PROTECTION	PROTECCION DESAGÜE	PROTECTION VIDANGE
25	153254	RUBBER ELBOW D30X385X85	CODO GOMA D30X385X85	COUDE GOMME D30X385X85
26	132282	CLAMP 301527-3 D32-50	ABRAZADERA 32- 50	BRIDE 301527-3 DSA-50
27	276261	RUBBER ELBOW D30X170X140	CODO GOMA D30X170X140	COUDE GOMME D30X170X140
28	153296	DRAIN HOSE	TUBO DESAGÜE	TUBE VIDANGE
29	155143	CLAMP 110-130	ABRAZADERA 110-130	BRIDE 110-130
30	128298	RUBBER ELBOW D50X200X300	CODO GOMA D50X200X300	COUDE GOMME D50X200X300
31	262634	BEARING BOX DRAIN HOSE	TUBO DESAGÜE CAJA COJINETES	TUBE VIDANGE BOITE ROULEMENTS
32	120964	PRESSURE SWITCH INTAKE BODY	CUERPO TOMA PRESOSTATO	CORPS PRISE PRESSOSTAT
33	120956	LEVEL PRESSURE-SWITCH INTAKE	TOMA PRESOSTATO NIVEL	PRISE PRESSOSTAT NIVEAU
34	206474 &	PRESSURE-SWITCH HOSE (FOR SR) (FOR CR)	TUBO PRESOSTATOS (PARA SR) (PARA CR)	TUBE PRESSOSTATS (POUR SR) (POUR CR)
	222687 &	AIR CONDUCTION HOSE (FOR CM) (FOR PM)	TUBO CONDUCCION AIRE (PARA CM) (PARA PM)	TUBE CONDUITE AIR (POUR..CM) (POUR PM)
35	279588	AIR CONDUCTION HOSE (FOR CM) (FOR PM)	TUBO CONDUCCION AIRE (PARA CM) (PARA PM)	TUBE CONDUITE AIR (POUR..CM) (POUR PM)
36	146274	BICR.HEX SCREW DIN933-8 M-5X10	TOR.EX.DIN933-8.8 B.TRI.M 5X10	VIS HEX.BICR.DIN933-8.8 M-5X10
37	149534	BICR.WASHER B DIN125-ST 5,3	ARAN.B DIN125-ST B.TRI. 5,3	RONDELLE B BICR.DIN125-ST 5,3
38	121962	HEATER INLET LID	CIERRE ENTRADA CALEFACTOR	FERMETURE ENTREE RESISTANCE

&	128199	1 METER RUBBER HOSE D 9X 5	1 METRO TUBO GOMA D 9X 5	1 METRE TUBE GOMME D 9X 5

info@zipnasklade.ru
8(800)500-69-51

Nº	REF.	DENOMINATION	DENOMINACIÓN	DÉNOMINATION
		FROM MACHINE Nº 660.088	A PARTIR DE LA MÁQUINA Nº 660.088	A PARTIR DE LA MACHINE Nº 660.088
25	284265	OVERFLOW HOSE	TUBO REBOSADERO	TUBE DEVERSOIR

info@zipnasklade.ru
8(800)500-69-51

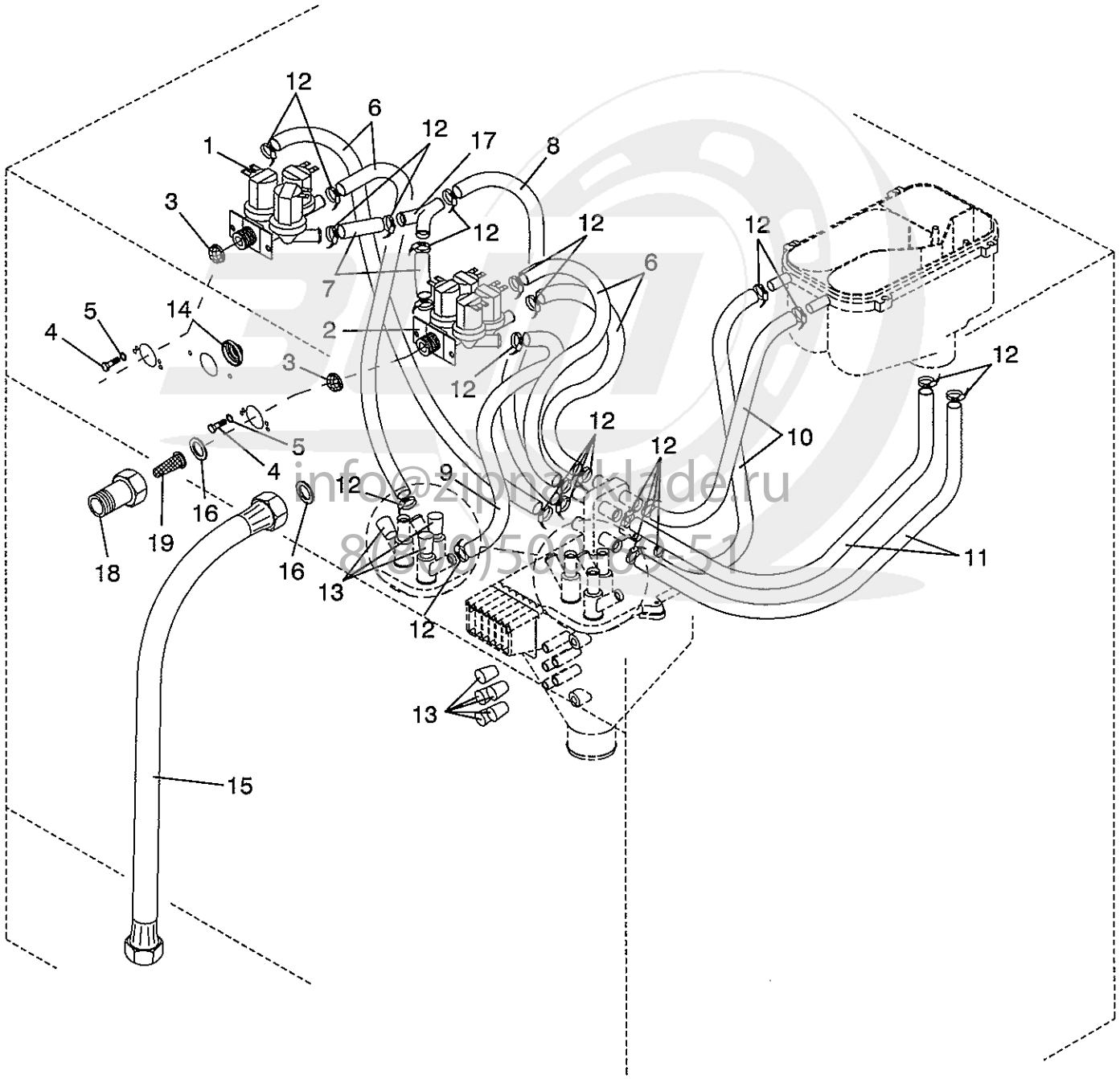

info@zipnakladе.ru
8(800)500-00-51

U-11911

Nº	REF.	DENOMINATION	DENOMINACIÓN	DÉNOMINATION
1	278507	3-TRACK ELECTROVALVE	ELECTROVALVULA TRES VIAS	ELECTROVANNE 3 VOIES
	192054	ELECT.SERIES 300 COIL 220/240V	BOBINA ELEC.SERIE 300 220/240V	BOBINE ELEC.SERIE 300 220/240V
	300194	YELLOW CASE 30053	ESTUCHE AMARILLO 30053	BOITE JAUNE 30053
	300202	INTEGRAL GUIDE-MEMBRANE 30696	MEMBRANA-GUIA INTEGRAL 30696	MEMBRANE-GUIDE INTEGRALE 30696
2	278481	4-TRACK ELECTROVALVE	ELECTROVALVULA CUATRO VIAS	ELECTROVANNE 4 VOIES
	192054	ELECT.SERIES 300 COIL 220/240V	BOBINA ELEC.SERIE 300 220/240V	BOBINE ELEC.SERIE 300 220/240V
	300194	YELLOW CASE 30053	ESTUCHE AMARILLO 30053	BOITE JAUNE 30053
	300202	INTEGRAL GUIDE-MEMBRANE 30696	MEMBRANA-GUIA INTEGRAL 30696	MEMBRANE-GUIDE INTEGRALE 30696
3	159996	ELECTROVALVE FILTER	FILTRO ELECTROVALVULA ELBI	FILTRE ELECTROVANNE
4	146258	BIC.HEX SCREW DIN933-4.8 M4X10	TOR.EX.DIN933-4.8 B.TRI.M 4X10	VIS HEX DIN933-4.8 BICR.M 4X10
5	149476	BICR.WASHER B DIN125-ST 4,3	ARAN.B DIN125-ST B.TRI. 4,3	RONDELLE B DIN125-ST BICR.4,3
6	259457 &	WATER INLET HOSE	TUBO ENTRADA AGUA	TUBE ENTREE EAU
7	278614 &	WATER INLET HOSE	TUBO ENTRADA AGUA	TUBE ENTREE EAU
8	123174 &	WATER INLET HOSE	TUBO ENTRADA AGUA	TUBE ENTREE EAU
9	278606 &	WATER INLET HOSE	TUBO ENTRADA AGUA	TUBE ENTREE EAU
10	259457 &	WATER INLET HOSE	TUBO ENTRADA AGUA	TUBE ENTREE EAU
11	214403 &	WATER INLET HOSE	TUBO ENTRADA AGUA	TUBE ENTREE EAU
12	155150	CLAMP 8-16	ABRAZADERA 8- 16	BRIDE 8-16
13	156679	CONICAL END-PIECE R-16 D10	TOPE CONICO REPRIMSA R-16 D10	BOUCHON CONIQUE R-16 D10
14	181701	LEGRAND CONE 91911	CONO LEGRAND 91911	CONE LEGRAND 91911
15	164137	WATER INLET HOSE RACORDS 3/4"	TUBO EPDM 3/4"X1500 C.RACORES	TUBE ENTREE EAU RACCORDS 3/4"
16	114348	GASKET D24XD13,5X2	JUNTA MIFLEX D24X13,5X2	JOINT D24XD13,5X2
17	152165	BRANCH	BIFURCACION	BIFURCATION

info@zipnasklade.ru
8(800)500-69-51

Nº	REF.	DENOMINATION	DENOMINACIÓN	DÉNOMINATION
		WITHOUT ILLUSTRATION	SIN ILUSTRACION	SANS ILLUSTRATION
		WATER INLET FILTER SUPPLEMENT	SUPLEMENTO FILTRO ENTRADA AGUA	SUPPLEMENT FILTRE ENTREE EAU
		WATER INLET FILTER SUPPLEMENT	SUPLEMENTO FILTRO ENTRADA AGUA	SUPPLEMENT FILTRE ENTREE EAU
	163899	WATER INLET FILTER SET	GRUPO FILTRO ENTRADA AGUA	GROUPE FILTRE ENTREE EAU
		METALIC ADAPTOR SUPPLEMENT	SUPLEMENTO ADAPTADOR METALICO	SUPPLÉMENT ADAPTATEUR MÉTALLI.
	163915	THREADED BRASS FILTER 3/4"	FILTRO LATON FLT ROSC.3/4" 0,5	FILTRE EN LAITON A VIS 3/4"
		METALIC ADAPTOR SUPPLEMENT	SUPLEMENTO ADAPTADOR METALICO	SUPPLÉMENT ADAPTATEUR MÉTALLI.
	299602	WATER INLET SUPPLEMENT	SUPLEMENTO ENTRADA AGUA	SUPPLEMENT ENTREE EAU
&	128215	1 METER HOSE EPDM D 9X17	1 METRO TUBO EPDM D 9X17	1 METRE TUBE EPDM D 9X17

info@zipnasklade.ru
8(800)500-69-51

Nº	REF.	DENOMINATION	DENOMINACIÓN	DÉNOMINATION
		FROM MACHINE Nº 660.566	A PARTIR DE LA MÁQUINA Nº 660.566	A PARTIR DE LA MACHINE Nº 660.566
3	159996	CANCELLED	ANULADO	ANNULE
18	315317	FILTER BODY	CUERPO FILTRO	CORPS FILTRE
19	315614	CONICAL FILTER	FILTRO CONICO REF.4008-2-1	FILTRE CONIQUE

info@zipnasklade.ru
8(800)500-69-51

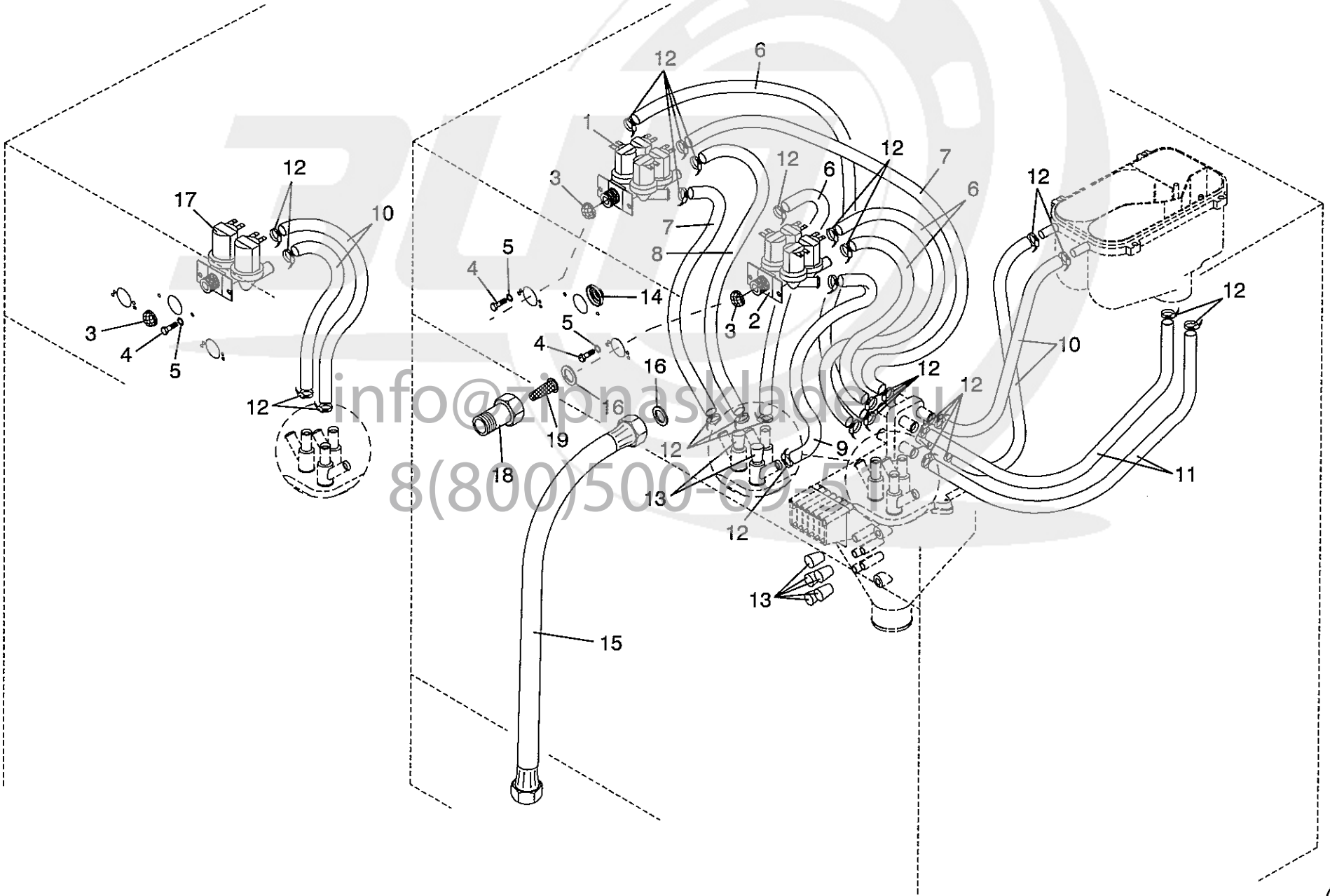

info@zipnasklad.ru
8(800)500-89-55

Nº	REF.	DENOMINATION	DENOMINACIÓN	DÉNOMINATION
1	129411	180 DEG. ELECTROVALVE 389A	ELECTROV.CUADRUPLE 389-A 180º	ELECTROVANNE 180 DEG.389A
	192054	ELECT.SERIES 300 COIL 220/240V	BOBINA ELEC.SERIE 300 220/240V	BOBINE ELEC.SERIE 300 220/240V
	300194	YELLOW CASE 30053	ESTUCHE AMARILLO 30053	BOITE JAUNE 30053
	300202	INTEGRAL GUIDE-MEMBRANE 30696	MEMBRANA-GUIA INTEGRAL 30696	MEMBRANE-GUIDE INTEGRALE 30696
2	241026	4-TRACK ELECTROVALVE	ELECTROVALVULA CUATRO VIAS	ELECTROVANNE 4 VOIES
	192054	ELECT.SERIES 300 COIL 220/240V	BOBINA ELEC.SERIE 300 220/240V	BOBINE ELEC.SERIE 300 220/240V
	300194	YELLOW CASE 30053	ESTUCHE AMARILLO 30053	BOITE JAUNE 30053
	300202	INTEGRAL GUIDE-MEMBRANE 30696	MEMBRANA-GUIA INTEGRAL 30696	MEMBRANE-GUIDE INTEGRALE 30696
3	159996	ELECTROVALVE FILTER	FILTRO ELECTROVALVULA ELBI	FILTRE ELECTROVANNE
4	146258	BIC.HEX SCREW DIN933-4.8 M4X10	TOR.EX.DIN933-4.8 B.TRI.M 4X10	VIS HEX DIN933-4.8 BICR.M 4X10
5	149476	BICR.WASHER B DIN125-ST 4,3	ARAN.B DIN125-ST B.TRI. 4,3	RONDELLE B DIN125-ST BICR.4,3
6	259457 &	WATER INLET HOSE	TUBO ENTRADA AGUA	TUBE ENTREE EAU
7	250233 &	WATER INLET HOSE	TUBO ENTRADA AGUA	TUBE ENTREE EAU
8	121137 &	WATER INLET HOSE	TUBO ENTRADA AGUA	TUBE ENTREE EAU
9	278606 &	WATER INLET HOSE	TUBO ENTRADA AGUA	TUBE ENTREE EAU
10	259457 &	WATER INLET HOSE	TUBO ENTRADA AGUA	TUBE ENTREE EAU
11	214403 &	WATER INLET HOSE	TUBO ENTRADA AGUA	TUBE ENTREE EAU
12	155150	CLAMP 8-16	ABRAZADERA 8- 16	BRIDE 8-16
13	156679	CONICAL END-PIECE R-16 D10	TOPE CONICO REPRIMSA R-16 D10	BOUCHON CONIQUE R-16 D10
14	181701	LEGRAND CONE 91911	CONO LEGRAND 91911	CONE LEGRAND 91911
15	164137	WATER INLET HOSE RACORDS 3/4"	TUBO EPDM 3/4"X1500 C.RACORES	TUBE ENTREE EAU RACCORDS 3/4"
16	114348	GASKET D24XD13,5X2	JUNTA MIFLEX D24X13,5X2	JOINT D24XD13,5X2
17	129379	DOUBLE ELECTROVALVE 349A 180º	ELECTROV.DOBLE 349-A 180º	ELECTROVANNE DOUBLE 349A 180º
	192054	ELECT.SERIES 300 COIL 220/240V	BOBINA ELEC.SERIE 300 220/240V	BOBINE ELEC.SERIE 300 220/240V
	300194	YELLOW CASE 30053	ESTUCHE AMARILLO 30053	BOITE JAUNE 30053
	300202	INTEGRAL GUIDE-MEMBRANE 30696	MEMBRANA-GUIA INTEGRAL 30696	MEMBRANE-GUIDE INTEGRALE 30696

.
.
.
.

info@zipnasklade.ru
8(800)500-69-51

Nº	REF.	DENOMINATION	DENOMINACIÓN	DÉNOMINATION
		WITHOUT ILLUSTRATION	SIN ILUSTRACION	SANS ILLUSTRATION
		WATER INLET FILTER SUPPLEMENT	SUPLEMENTO FILTRO ENTRADA AGUA	SUPPLEMENT FILTRE ENTREE EAU
		WATER INLET FILTER SUPPLEMENT	SUPLEMENTO FILTRO ENTRADA AGUA	SUPPLEMENT FILTRE ENTREE EAU
		METALIC ADAPTOR SUPPLEMENT	SUPLEMENTO ADAPTADOR METALICO	SUPPLÉMENT ADAPTATEUR MÉTALLI.
	163899	WATER INLET FILTER SET	GRUPO FILTRO ENTRADA AGUA	GROUPE FILTRE ENTREE EAU
	163915	THREADED BRASS FILTER 3/4" (FOR PM)	FILTRO LATON FLT ROSC.3/4" 0,5 (PARA PM)	FILTRE EN LAITON A VIS 3/4" (POUR PM)
		METALIC ADAPTOR SUPPLEMENT	SUPLEMENTO ADAPTADOR METALICO	SUPPLÉMENT ADAPTATEUR MÉTALLI.
	299602	WATER INLET SUPPLEMENT	SUPLEMENTO ENTRADA AGUA	SUPPLEMENT ENTREE EAU
	797019	THIRD WATER INLET KIT (FOR PM)	KIT TERCERA ENTRADA AGUA (PARA PM)	KIT TROISIEME ENTREE EAU (POUR PM)
&	128215	1 METER HOSE EPDM D 9X17	1 METRO TUBO EPDM D 9X17	1 METRE TUBE EPDM D 9X17

info@zipnasklade.ru
8(800)500-69-51

Nº	REF.	DENOMINATION	DENOMINACIÓN	DÉNOMINATION
		FROM MACHINE Nº 660.566	A PARTIR DE LA MÁQUINA Nº 660.566	A PARTIR DE LA MACHINE Nº 660.566
3	159996	CANCELLED	ANULADO	ANNULE
18	315317	FILTER BODY	CUERPO FILTRO	CORPS FILTRE
19	315614	CONICAL FILTER	FILTRO CONICO REF.4008-2-1	FILTRE CONIQUE

info@zipnasklade.ru
8(800)500-69-51

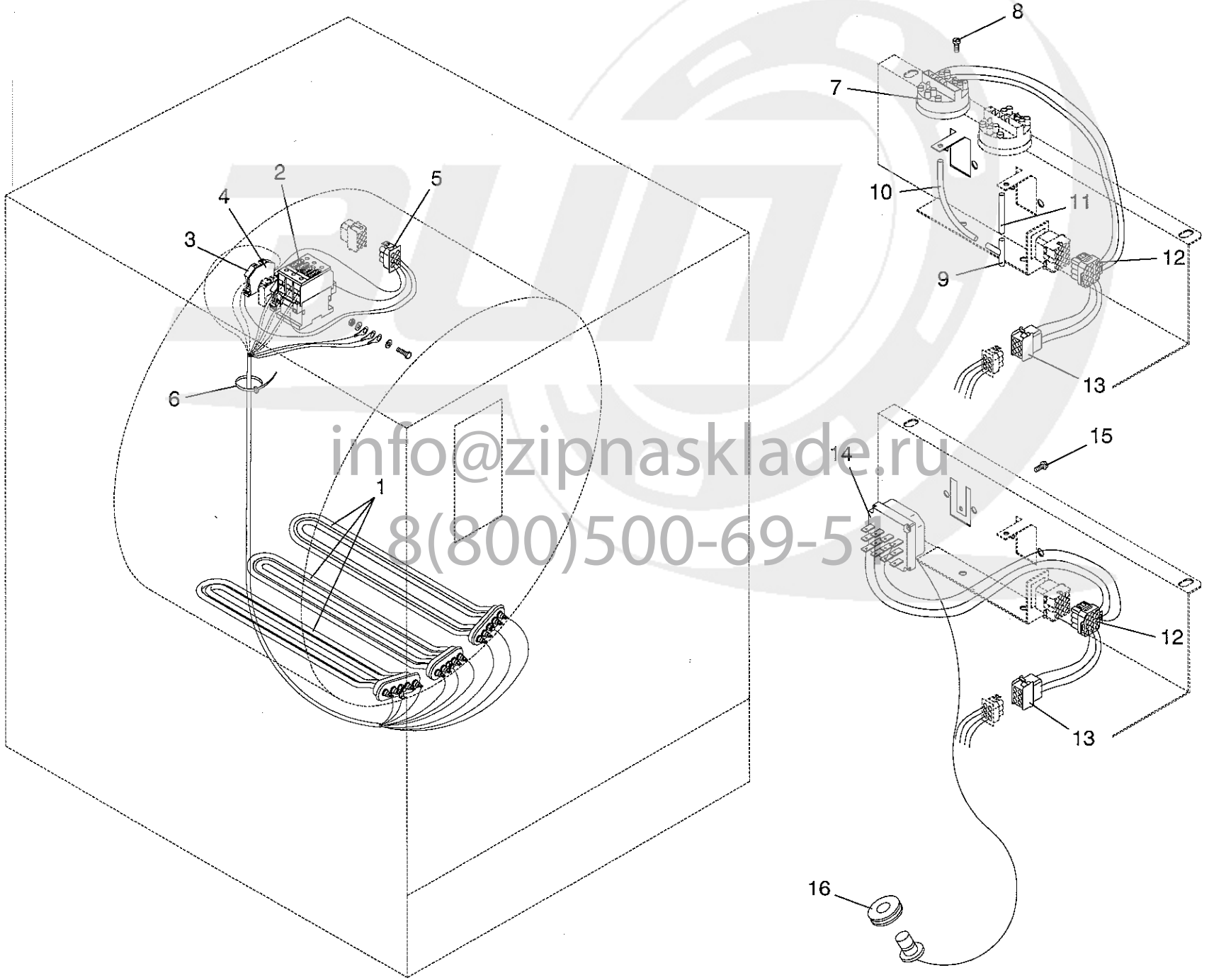

info@zipnasklade.ru
8(800)500-69-5

U-11913

Nº	REF.	DENOMINATION	DENOMINACIÓN	DÉNOMINATION
		ELECTRIC HEATING KITS	KITS CALEFACCIÓN ELÉCTRICA	KITS CHAUFFAGE ELECTRIQUE
	716316	EHK SR 3PH 200-208-220-380V	KCE.SR III 200-208-220-380V	KCHE SR 3PH 200-208-220-380V
	716324	EHK SR 3PH 240-415-440V	KCE SR III 240-415-440V	KCHE SR 3PH 240-415-440V
	716431	EHK CR 3PH 200-208-220-380V	KCE CR III 200-208-220-380V	KCHE CR 3PH 200-208-220-380V
	716449	EHK CR 3PH 240-415-440V	KCE CR III 240-415-440V	KCHE CR 3PH 240-415-440V
	716373	EHK M 3PH 200-208-220-380V	KCE M III 200-208-220-380V	KCHE M 3PH 200-208-220-380
	716381	EHK M 3PH 240-415-440V	KCE M III 240-415-440V	KCHE M 3PH 240-415-440V
	716340	EHK SR 1PH 200-208-220V	KCE SR II 200-208-220V	KCHE SR 1PH 200-208-220V
	716357	EHK SR 1PH 240V	KCE SR II 240V	KCHE SR 1PH 240V
	716464	EHK CR 1PH 200-208-220V	KCE CR II 200-208-220V	KCHE CR 1PH 200-208-220V
	716472	EHK CR 1PH 240V	KCE CR II 240V	KCHE CR 1PH 240V
	716407	EHK M 1PH 200-208-220V	KCE M II 200-208-220V	KCHE M 1PH 200-208-220V
	716415	EHK M 1PH 240V	KCE M II 240V	KCHE M 1PH 240V
1	319749	HEATER 230V 2500W (FOR 200-208-220-230-380-400V)	CALEFACTOR 230V 2500W (PARA 200-208-220-230-380-400V	RESISTANCE 230V 2500W (POUR 200-208-220-230-380-400V
	318741	HEATER 240V 2500W (FOR 240 AND 415V) (FOR 208 AND 240V)	CALEFACTOR 240V 2500W (PARA 240 Y 415V) (PARA 208 Y 240V)	RESISTANCE 240V 2500W (POUR 240 ET 415V) (POUR 208 ET 240V)
2	193433	CONTACTOR 3TF31 01-OAN2	CONTACTOR 3TF31 01-OAN2 ZZ	CONTACTEUR 3TF31 01-OAN2
	194050	COIL 3TY7 403-OAN2	BOBINA 3TY7 403-OAN2 ZZ	BOBINE 3TY7 403-OAN2
3	155465	TERMINAL BC 10/16R 638455	BORNA CIAMA BC 10/16R 638455	BORNE BC 10/16R 638455
4	155275	END COVER FC2 5/10	TAPA FIN.CIAMA FC2.5/10 635455	COUVERCLE FINAL FC2.5/10
5	139394	PROTECTOR 1/480704-0	PROTECTOR 1/480704-0	PROTECTEUR 1/480704-0
6	140525	CLAMP 2244-0	BRIDA UNEX 2244-0	BRIDE 2244-0
7	121814	DOUBLE LEVEL PRESSOSTAT (FOR SR)	PRESOSTATO NIVEL DOBLE (PARA SR)	PRESSOSTAT NIVEAU DOUBLE (POUR SR)
8	166835	SELFTHREADED SCREW (FOR SR)	TOR.CELO RF81T 3,5X12 (PARA SR)	VIS AUTO-FILETE 271147231900 (POUR SR)
9	113357	PLASTIC T FOR HOSE D6 (FOR SR)	T PLASTICO PARA MANGUERA D 6 (PARA SR)	T PLASTIQUE POUR TUYAU D6 (POUR SR)
10	222695	AIR CONDUCTION HOSE (FOR SR)	TUBO CONDUCCION AIRE (PARA SR)	TUBE CONDUITE AIR (POUR SR)

info@zipnasklade.ru
8(800)500-69-51

Nº	REF.	DENOMINATION	DENOMINACIÓN	DÉNOMINATION
11	222711	AIR CONDUCTION HOSE (FOR SR)	TUBO CONDUCCION AIRE (PARA SR)	TUBE CONDUITE AIR (POUR SR)
12	139410	PROTECTOR 1/480708-0 (FOR SR) (FOR CR)	PROTECTOR 1/480708-0 (PARA SR) (PARA CR)	PROTECTEUR 1/480708-0 (POUR SR) (POUR CR)
13	139444	PROTECTOR 1/480705-0 (FOR SR) (FOR CR)	PROTECTOR 1/480705-0 (PARA SR) (PARA CR)	PROTECTEUR 1/480705-0 (POUR SR) (POUR CR)
14	155762	THERMOSTAT 55.40314.02 (FOR CR)	TERMOSTATO EGO 55.40314.02 (PARA CR)	THERMOSTAT 55.40314.02 (POUR CR)
15	146084	BICR CYL SCREW DIN84 M 4X 10 (FOR CR)	TOR.CIL.DIN84-4.8 B.TRI.M 4X10 (PARA CR)	VIS CYL BICR DIN84-4.8 M 4X 10 (POUR CR)
16	157198	THERMOSTAT SHEATH LODGING (FOR CR)	PASAMUROS TERMOSTATO (PARA CR)	LOGEMENT THERMOSTAT (POUR CR)

info@zipnasklade.ru
8(800)500-69-51

Nº	REF.	DENOMINATION	DENOMINACIÓN	DÉNOMINATION
		FROM MACHINE Nº 661.969	A PARTIR DE LA MÁQUINA Nº 661.969	A PARTIR DE LA MACHINE Nº 661.969
2	326231	CONTACTOR 3RT10 17-1AP02	CONTACTOR 3RT10 17-1AP02	CONTACTEUR 3RT10 17-1AP02
	194050	CANCELLED	ANULADO	ANNULE

info@zipnasklade.ru
8(800)500-69-51

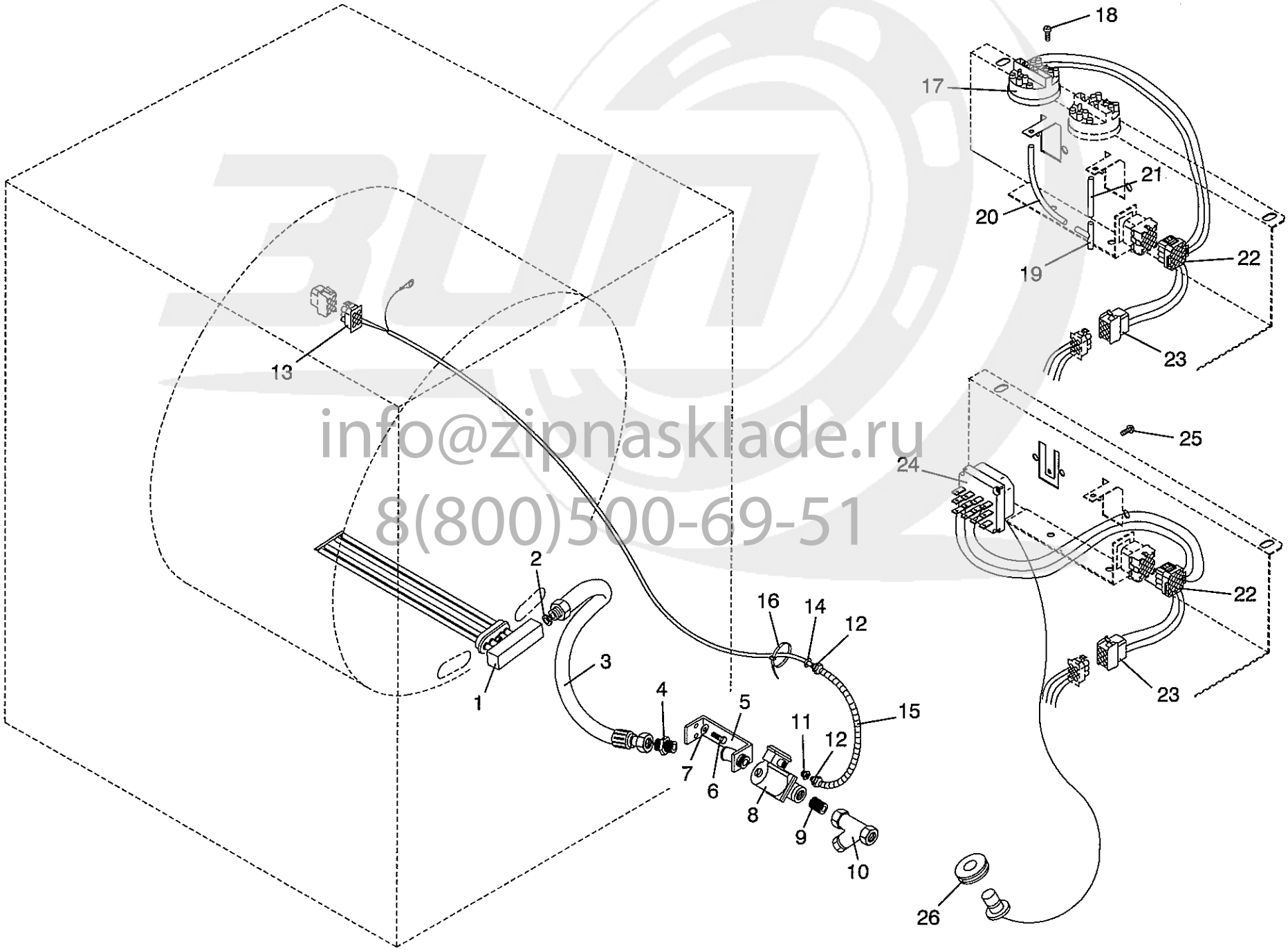

info@zipnasklade.ru
8(800)500-69-51

U-11914

Nº	REF.	DENOMINATION	DENOMINACIÓN	DÉNOMINATION
		STEAM HEATING KITS	KITS CALEFACCIÓN VAPOR	KITS CHAUFFAGE VAPEUR
	716498	SHK SR 50HZ	KCV SR 50HZ	KCHV SR 50HZ
	716506	SHK SR 60HZ	KCV SR 60HZ	KCHV SR 60HZ
	716530	SHK CR 50HZ	KCV CR 50HZ	KCHV CR 50HZ
	716548	SHK CR 60HZ	KCV CR 60HZ	KCHV CR 60HZ
	716514	SHK PM/CM/SM 50HZ	KCV PM/CM/SM 50HZ	KCHV PM/CM/SM 50HZ
	716522	SHK PM/CM/SM 60HZ	KCV PM/CM/SM 60HZ	KCHV PM/CM/SM 60HZ
1	108431	STEAM DISTRIBUTOR	DISTRIBUIDOR VAPOR	DISTRIBUTEUR VAPEUR
2	109777	COPPER GASKET 1/2"	12504 JUNTA COBRE 1/2"	JOINT CUIVRE 1,2"
3	156240	STEAM INLET JOINTING	UNION ENTRADA VAPOR	UNION ENTREE VAPEUR
4	156216	JOINTING SCREW 10903 1/2"	10903 TORNILLO UNION MM1/2"	VIS UNION 10903 1/2"
5	158832	STEAM INLET	ENTRADA VAPOR	ENTREE VAPEUR
6	146233	BICR.HEX SCREW DIN933-8 M6X15	TOR.EX.DIN933-8.8 B.TRI.M 6X15	VIS HEX DIN933-8.8 BICR.M6X15
7	149526	BICR.WASHER B DIN125-ST 6,4	ARAN.B DIN125-ST B.TRI. 6,4	RONDELLE B DIN125-ST BICR.6,4
8	156760	ELECTROVALVE 032U3033/84 1/2" (FOR 50HZ)	ELECT.032U3033/84 1/2" 220/50 (PARA 50 HZ)	ELECTROVANNE 032U3033/84 1/2" (POUR 50 HZ)
	159806	COIL 32K7771 220/50 (FOR 50HZ)	BOBINA DANFOSS 32K7771 220/50 (PARA 50 HZ)	BOBINE 32K7771 220/50 (POUR 50 HZ)
	159822	SPARE KIT EVJHS-15-20	KIT REPUES.EVJHS-15-20 32U3129	KIT RECHANGE EVJHS-15-20
	157545	ELECTROVALVE 032U3033/90 1/2" (FOR 60HZ)	ELECT.032U3033/90 1/2" 220/60 (PARA 60 HZ)	ELECTROVANNE 032U3033/90 1/2" (POUR 60 HZ)
	159814	COIL 32K7776 220/60 (FOR 60HZ)	BOBINA DANFOSS 32K7776 220/60 (PARA 60 HZ)	BOBINE 32K7776 220/60 (POUR 60 HZ)
	159822	SPARE KIT EVJHS-15-20	KIT REPUES.EVJHS-15-20 32U3129	KIT RECHANGE EVJHS-15-20
9	129999	FIG 531 1/2" GALV	FIGURA 531 DE 1/2" GALV.	FIG 531 1/2" GALV
10	133728	THREADED FILTER 1/2" O'3 PN16	FILTRO COLAD. ROSC.1/2"0'3PN16	FILTRE FILETE 1/2" 0,3 PN16
11	140319	REDUCER PG 13'5-9	REDUCTOR 130904 PG 13'5-9	REDUCTEUR PG 13'5-9
12	140152	RACCORD PG- 9	RACOR PG- 9 REF.330904	RACCORD PG- 9
13	139394	PROTECTOR 1/480704-0	PROTECTOR 1/480704-0	PROTECTEUR 1/480704-0
14	140228	COUNTERNUT PG-9	TUERCA PG 280904 PG- 9	CONTREECROU PG-9

info@zipnasklade.ru
8(800)500-69-51

Nº	REF.	DENOMINATION	DENOMINACIÓN	DÉNOMINATION
15	140707	HOSE HELIPLAST NO 9 REF.77009 (1 METER)	TUBO HELIPLAST NO. 9 REF.77009 (1 METRO)	TUBE HELIPLAST NO 9 REF.77009 (1 METRE)
16	140525	CLAMP 2244-0	BRIDA UNEX 2244-0	BRIDE 2244-0
17	121814	DOUBLE LEVEL PRESSOSTAT (FOR SR)	PRESOSTATO NIVEL DOBLE (PARA SR)	PRESSOSTAT NIVEAU DOUBLE (POUR SR)
18	166835	SELFTHREADED SCREW (FOR SR)	TOR.CELO RF81T 3,5X12 (PARA SR)	VIS AUTO-FILETE 271147231900 (POUR SR)
19	113357	PLASTIC T FOR HOSE D6 (FOR SR)	T PLASTICO PARA MANGUERA D 6 (PARA SR)	T PLASTIQUE POUR TUYAU D6 (POUR SR)
20	222695	AIR CONDUCTION HOSE (FOR SR)	TUBO CONDUCCION AIRE (PARA SR)	TUBE CONDUITE AIR (POUR SR)
21	222711	AIR CONDUCTION HOSE (FOR SR)	TUBO CONDUCCION AIRE (PARA SR)	TUBE CONDUITE AIR (POUR SR)
22	139410	PROTECTOR 1/480708-0 (FOR SR) (FOR CR)	PROTECTOR 1/480708-0 (PARA SR) (PARA CR)	PROTECTEUR 1/480708-0 (POUR SR) (POUR CR)
23	139444	PROTECTOR 1/480705-0 (FOR SR) (FOR CR)	PROTECTOR 1/480705-0 (PARA SR) (PARA CR)	PROTECTEUR 1/480705-0 (POUR SR) (POUR CR)
24	155762	THERMOSTAT 55.40314.02 (FOR CR)	TERMOSTATO EGO 55.40314.02 (PARA CR)	THERMOSTAT 55.40314.02 (POUR CR)
25	146084	BICR CYL SCREW DIN84 M 4X 10 (FOR CR)	TOR.CIL.DIN84-4.8 B.TRI.M 4X10 (PARA CR)	VIS CYL BICR DIN84-4.8 M 4X 10 (POUR CR)
26	157198	THERMOSTAT SHEATH LODGING (FOR CR)	PASAMUROS TERMOSTATO (PARA CR)	LOGEMENT THERMOSTAT (POUR CR)

info@zipnasklade.ru
8(800)500-69-51