Mod.	From serial no. A partir máq. nº
L1075	1.030.001

Parts Handbook for Washers
Manual de Despiece para lavadoras
Notice Vues Eclatées pour laveuses

L1075

info@zipnasklade.ru
8(800)500-69-51

GIRBAU, S.A.
Crta de Manlleu, km. 1
08500 VIC (Barcelona) • SPAIN
Tel. 34 93 8861100
Fax 34 93 8860785
girbau@girbau.es
www.girbau.com

Parts Handbook
Despiece
Vues Eclatées

L1075

USA, CANADA:

CONTINENTAL GIRBAU Inc.
2500 State Road 44
WI 54904 Oshkosh • USA
Tel. 1(920) 231-8222
Fax 1(920) 231-4666
info@cont-girbau.com
www.cont-girbau.com

Cod. 284018 D
Rev. 03/0516

NOTES TO USE PARTS LIST

Sheets no. 1,2,3,4,7 & 8:
Are common for all versions.

Sheet no. 5:
Relates to CM version.

Sheet no. 6:
Relates to PM/SM versions.

Sheet no. 9:
The bottom just refers to three water inlets machines (PM only).

Sheet no. 10:
Relates to electrical heated machines.

Sheet no. 11:
Relates to steam heated machines.

ACLARACIONES PARA EL USO DEL DESPIECE

Hojas nº 1,2,3,4,7 y 8:
Son comunes a todas las variantes.

Hoja nº 5:
Corresponde a la variante CM.

Hoja nº 6:
Corresponde a las variantes PM/SM.

Hoja nº 9:
La parte inferior es sólo para las máquinas con tres entradas de agua (Sólo PM).

Hoja nº 10:
Corresponde a las máquinas con calefacción eléctrica.

Hoja nº 11:
Corresponde a las máquinas con calefacción a vapor.

NOTES UTILISATION VUES ECLATEES

Feuilles no.1,2,3,4,7 et 8:
Sont communes à toutes les versions.

Feuille no. 5:
Correspond à la version CM.

Feuille no. 6:
Correspond aux versions PM/SM.

Feuille no. 9:
La partie inférieure est seulement pour les machines à trois arrivées d'eau (Seulement PM).

Feuille no. 10 :
Correspond aux machines à chauffage électrique.

Feuille no. 11 :
Correspond aux machines à chauffage à vapeur.

info@zipnasklade.ru
8(800)500-69-51

VERY IMPORTANT:
Before ordering parts be sure they have not been modified. Check it on modification sheet, after the corresponding sheet.

MUY IMPORTANTE:
Al pedir una pieza cerciorarse antes de que la misma no ha sido modificada. Si lo hubiese sido, estaría situada como hoja de modificaciones, detrás de la hoja correspondiente.

TRES IMPORTANT:
Avant de commander une pièce, s'assurer qu'elle n'a pas été modifiée. Le vérifier sur feuille de modifications, derrière la feuille correspondante.

info@zipnasklade.ru
8(800)500-69-51

L1075 ①

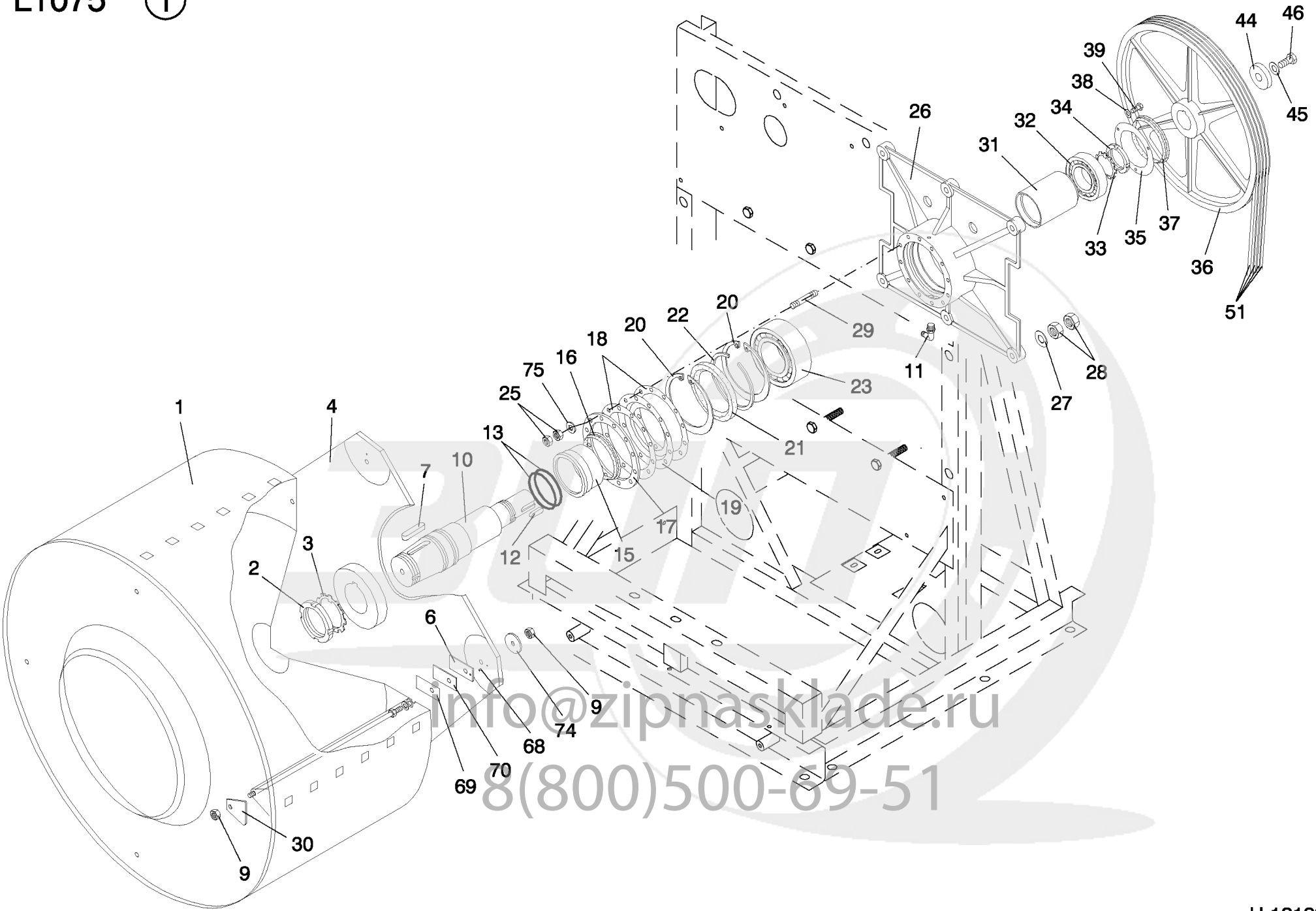

info@zipnasklade.ru
8(800)500-69-51

U.12193

Nº	REF		DENOMINATION	DENOMINACIÓN	DENOMINATION
1	200485	*	BASKET BODY	CUERPO TAMBOR	CORPS TAMBOUR
2	131474		FIXING NUT KM-15	TUERCA FIJACION TAMBOR	ECROU FIXATION KM-15
3	200576		BASKET SHAFT WASHER	ARANDELA EJE TAMBOR	RONDELLE PALIER TAMBOUR
4	200543		BASKET COUPLING	ACOPLAMIENTO TAMBOR	ASSAMBLAGE TAMBOUR
6	200477		BASKET COUPLING PART	PIEZA ACOPLAMIENTO TAMBOR	PIECE ASSAMBLAGE TAMBOUR
7	127910		PIN DIN 6885-A 63X25X14	CHAVETA DIN 6885-A 63X25X14	CLAVETTE DIN 6885-A 63X25X14
9	149930		INOX. HEX. NUT DIN 934 M-14	TUER.EX.DIN934 INOX A2-70 M14	ECROU HEX. INOX. DIN 934 M-14
10	200469		BASKET SHAFT	EJE TAMBOR	PALIER TAMBOUR
11	276386		BEARING CASE DRAIN	DESAGUE CAJA COJINETES	VIDANGE BOITE ROULEMENTS
12	127829		PIN DIN 6885-AB 45X14X9	CHAVETA DIN 6885-AB 45X14X9	CLAVETTE DIN 6885-AB 45X14X9
13	134007		TORIC GASKET 89,4X78,74X5,33	JUN.TORICA89'4X78'74X5'33 3453	JOINT TORIQUE 89,4X78,74X5,33
15	200022		SEAL RING	ANILLO RETENES	BAGUE RESERVES
16	193607		RING V-RING V-110 S VITON	ANILLO V-RING V-110 S VITON	BAGUE V-RING V-110 S VITON
17	284323		SEAL COVER PLATE	PLATINA TAPA RETEN	PLAQUE COUVERCLE RESERVE
18	122614		SEAL COVER GASKET	JUNTA TAPA RETEN	JOINT COUVERCLE RESERVE
19	122606		SEAL COVER	TAPA RETEN	COUVERCLE RESERVE
20	131656		FLEXIBLE RING I-140 DIN 472	ANILLO ELASTICO I-140 DIN 472	BAGUE ELASTIQUE I-140 DIN 472
21	127639		SEAL 105X140X13	RETEN 105X140X13 R.22498	RESERVE 105X140X13
22	200014		SEALS SEPARATOR RING	ANILLO SEPARADOR RETENES	BAGUE SEPARATION RESERVES
23	128744		BEARING 22216 C	RODAMIENTO 22216 E	ROULEMENT 22216 C
25	149963		INOX HEX NUT DIN 934 M-8	TUER.EX.DIN934 INOX A2-70 M 8	ECROU HEX. INOX DIN 934 M-8
26	200006		BEARING CASE	CAJA COJINETES	BOITE ROULEMENTS
27	149435		BICR.WASHER B DIN 125-ST 19	ARAN.B DIN125-ST B.TRI.19	RONDELLE B BICR. DIN125-ST 19
28	150243		BICR HEX. NUT DIN 934-8 M 18	TUER.EX.DIN934-8 B.TRI.M18	ECROU HEX.DIN 934-8 BICR. M 18
29	277939		SEAL COVER BUMP	ESPARRAGO TAPA RETEN	GOUJON COUVERCLE RESERVE
30	117564		BASKET SHOVEL RENFORT	REFUERZO PALA TAMBOR	REFORT PALETTE TAMBOUR
31	200055		BEARING END PIECE	TOPE COJINETES	ARRET ROULEMENTS
32	128710		BEARING 21311	RODAMIENTO 21311 E	ROULEMENT 21311

info@zipnasklade.ru
8(800)500-69-51

Nº	REF	DENOMINATION	DENOMINACIÓN	DENOMINATION
33	131409	LOCKING WASHER MB-11	ARANDELA CIERRE MB-11	RONDELLE FERMETURE MB-11
34	131466	FIXING NUT KM-11	TUERCA FIJACION KM-11 KSM	ECROU FIXATION KM-11
35	200097	PULLEY SEAL COVER	TAPA RETEN POLEA	COUVERCLE RESERVE POULIE
36	200030	BASKET PULLEY	POLEA TAMBOR	POULIE TAMBOUR
37	131821	RING V-RING V- 90 S	ANILLO V-RING V- 90 S NBR510	BAGUE V-RING V- 90 S
38	149500	BICR.WASHER B DIN125-ST 10,5	ARAN.B DIN125-ST B.TRI.10,5	RONDELLE B DIN125-ST BICR.10,5
39	147009	HEX SCREW 8G DIN 933 M-10X25	TOR.EX.DIN933-8.8 B.TRI.M10X25	VIS HEX. DIN 933 M-10X25 8G
44	115717	BASKET SHAFT END-WASHER	ARANDELA 60X15X10 TRIVALEN.	RONDELLE ARRET PALIER TAMBOUR
45	149393	BICR WASHER B DIN125-ST 15	ARAN.B DIN125-ST B.TRI.15	RONDELLE B BICR DIN125-ST 15
46	186312	HEX SCREW 8G DIN933 M14X35	TOR.EX.DIN933-8.8 B.TRI.M14X35	VIS HEX 8G DIN933 M14X35
51	129288	BELT SPZ-2137	CORREA TRAPECIAL SPZ-2137	COURROIE SPZ-2137
68	150821	FLEXIBLE PIN DIN 1481 D5X10	PASADOR ELASTICO DIN1481 D5X10	GOUJON ELASTIQUE DIN1481 D5X10
69	117572	BASKET CENTERING PIECE	PIEZA CENTRADO TAMBOR	PIECE CENTRAGE TAMBOUR
70	117580	BASKET CENTERING PIECE	PIEZA CENTRADO TAMBOR	PIECE CENTRAGE TAMBOUR
74	289678	WASHER 82X15X3	ARANDELA 82X15X3 INOX	RONDELLE 82X15X3

info@zipnasklade.ru
8(800)500-69-51

*	200451	COMPLETE BASKET	TAMBOR COMPLETO	TAMBOUR COMPLET

Nº	REF	DENOMINATION	DENOMINACIÓN	DENOMINATION
		FROM MACHINE Nr:	A PARTIR DE LA MAQUINA No :	A PARTIR DE LA MACHINE NR:
		1.030.018	1.030.018	1.030.018
17	212738	SEAL COVER PLATE	PLATINA TAPA RETEN	PLAT COUVERCLE RESERVE
29	162057	SEAL COVER BUMP	ESPARRAGO TAPA RETEN	GOUJON COUVERCLE RESERVE
75	149351	INOX A2 WASHER DIN 125 8,4	ARAN. DIN125 INOX A2 8,4	RONDELLE INOX A2 DIN 125 8,4

info@zipnasklade.ru
8(800)500-69-51

L1075 ②

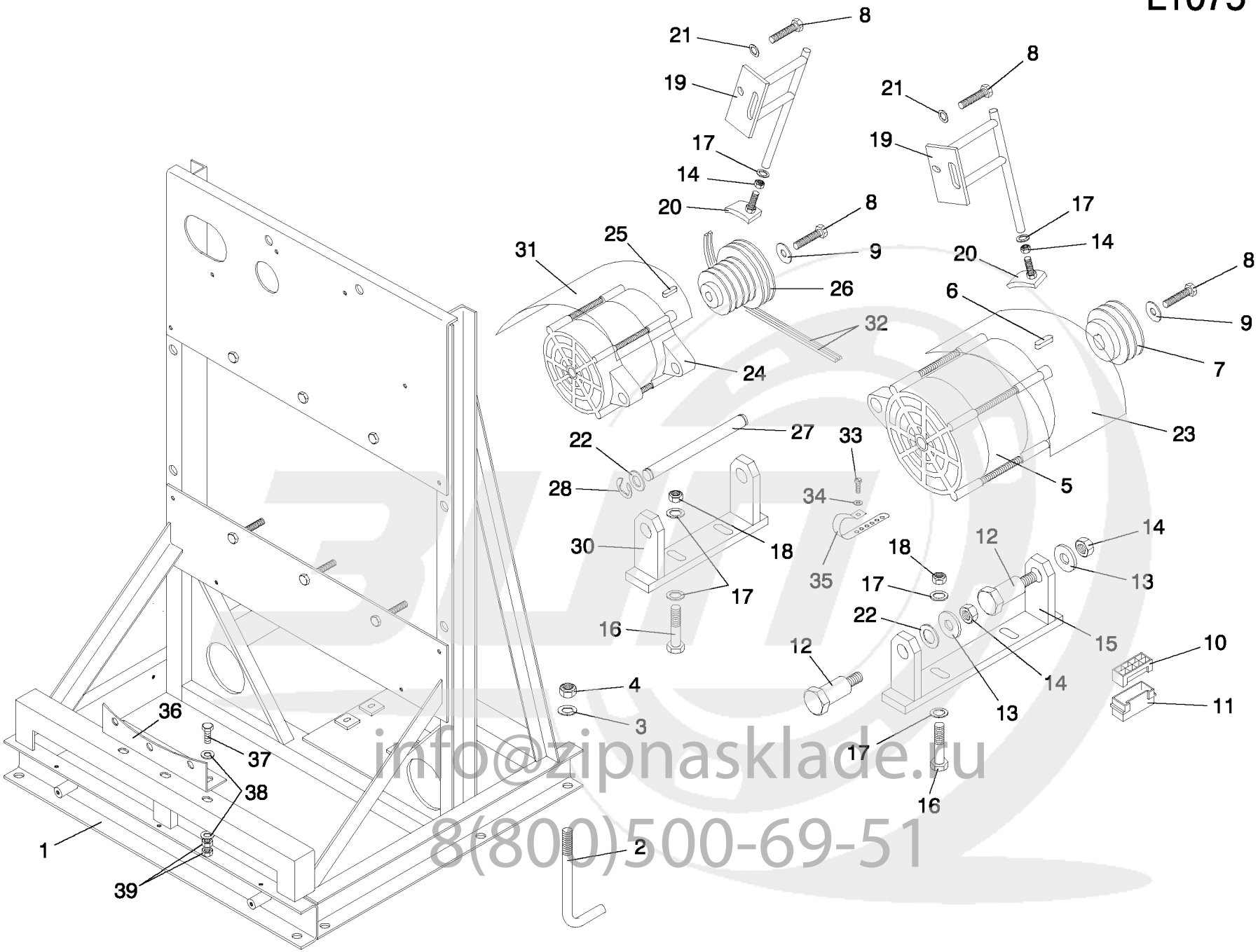

info@zipnasklade.ru
8(800)500-69-51

U.12194

Nº	REF	DENOMINATION	DENOMINACIÓN	DENOMINATION
1	276949	CHASSIS	CHASIS	CHASSIS
2	163287	HOLDING-DOWN BUMP (NUT AND WASHER INCLUDES)	ESPARRAGO ANCLAJE (INCLUYE TUERCA Y ARANDELA)	GOUJON SCELLEMENT (ECROU ET RONDELLE COMPRIS)
3	149393	BICR WASHER B DIN125-ST 15	ARAN.B DIN125-ST B.TRI.15	RONDELLE B BICR DIN125-ST 15
4	164350	SELFBLOCKING NUT DIN-985 M-14	TUER.AUTOB.DIN985-8 B.TRI.M14	ECROU AUTOBLOCANT DIN985 M-14
5	302372	MOTOR MT13290/8-12 208/380-60 (FOR 208-240/380V 60HZ) (FOR 200V 50HZ)	MOTOR MT13290/8-12 208/380-60* (PARA 208-240/380V 60HZ) (PARA 200 V 50HZ)	MOTEUR MT13290/8-12 208/380-60 (POUR 208-240/380V 60HZ) (POUR 200 V 50HZ)
	176040	MOTOR MT13290/8-12 220/380-50 (FOR 440-480V 60HZ) (FOR 220-240/380-415V 50HZ)	MOTOR MT13290/8-12 220/380-50* (PARA 440-480V 60HZ) (PARA 220-240/380-415V 50HZ)	MOTEUR MT13290/8-12 220/380-50 (POUR 440-480V 60HZ) (POUR 220-240/380-415V 50HZ)
	186841	BEARING 6305-2Z (COUPLING SIDE)	RODAMIENTO 6305-2Z (LADO ACOPLE)	ROULEMENT 6305-2Z (COTE COUPLAGE)
	128587	BEARING 6205 2Z QE6 (FAN SIDE)	RODAMIENTO 6205-2Z (LADO VENTILADOR)	ROULEMENT 6205 2Z QE6 (CÔTE VENTILATEUR)
6	128124	PIN DIN 6885-A 40X8X7	CHAVETA DIN 6885-A 40X 8X7	CLAVETTE DIN 6885-A 40X8X7
7	200766	WASH MOTOR PULLEY	POLEA MOTOR LAVADO	POULIE MOTEUR LAVAGE
8	192849	BIC.HEX SCREW DIN933-8 M-8X25	TOR.EX.DIN933-8.8 B.TRI.M 8X25	VIS HEX.DIN933-8,8 BICR.M-8X25
9	111278	WASHER 35X9X4	ARANDELA 35X9X4 TRIVALEN.	RONDELLE 35X9X4
10	139261	PLUG 163007	CONECTOR 163007	CONNECTEUR 163007
11	139279	PLUG 280430	CONECTOR 280430	CONNECTEUR 280430
12	273391	MOTOR BRACKET BOLT	BULON SOPORTE MOTOR	BOULON SUPPORT MOTEUR
13	110726	WASHER	ARANDELA 34X13X4 TRIVALEN.	RONDELLE
14	150656	SELFBLOCKING NUT DIN985 M-12	TUER.AUTOB.DIN985-8 B.TRI.M12	ECROU AUTOBLOCANT DIN985 M-12
15	239434	WASH MOTOR BRACKET	SOPORTE MOTOR LAVADO	SUPPORT MOTEUR LAVAGE
16	157354	HEX SCREW 8G DIN 933 M-12X45	TOR.EX.DIN933-8.8 B.TRI.M12X45	VIS HEX 8G DIN 933 M-12X45
17	149419	BICR.WASHER B DIN125-ST 13	ARAN.B DIN125-ST B.TRI.13	RONDELLE B DIN125-ST BICR.13
18	150235	BICR.HEX NUT DIN 934-8 M-12	TUER.EX.DIN934-8 B.TRI.M12	ECROU HEX DIN 934-8 BICR.M-12
19	230706	TIGHTENER BRACKET	SOPORTE TENSOR	SUPPORT TENDEUR
20	217893	TEIGHTENER SHOE	ZAPATA TENSOR	MACHOIRE TENDEUR
21	149518	BICR.WASHER B DIN125-ST 8,4	ARAN.B DIN125-ST B.TRI. 8,4	RONDELLE.B DIN125-ST BICR.8,4
22	263434	WASHER 32X21X0,8	ARANDELA 32X21X0.8 INOX	RONDELLE 32X21X0,8

info@zipnasklade.ru
8(800)500-69-51

Nº	REF	DENOMINATION	DENOMINACIÓN	DENOMINATION
23	211920	MOTOR COVER	TAPA MOTOR	COUVERCLE MOTEUR
24	302380	MOTOR MT 90 90/2 208/380-60 (FOR 208-240/380V 60HZ) (FOR 200V 50HZ)	MOTOR MT 90 90/2 208/380-60* (PARA 208-240/380V 60HZ) (PARA 200 V 50HZ)	MOTEUR MT 90 90/2 208/380-60 (POUR 208-240/380V 60HZ) (POUR 200 V 50HZ)
	176081	MOTOR MT90-90/2 220/380-50 (FOR 440-480V 60HZ) (FOR 220-240/380-415V 50HZ)	MOTOR MT 90-90/2 220/380-50* (PARA 440-480V 60HZ) (PARA 220-240/380-415V 50HZ)	MOTEUR MT90-90/2 220/380-50 (POUR 440-480V 60HZ) (POUR 220-240/380-415V 50HZ)
	101907	BEARING 6306-2Z QE6 (COUPLING SIDE)	RODAMIENTO 6306-2Z QE6 (LADO ACOPLE)	ROULEMENT 6306-2Z QE6 (COTE COUPLAGE)
	186841	BEARING 6305-2Z (FAN SIDE)	RODAMIENTO 6305-2Z (LADO VENTILADOR)	ROULEMENT 6305-2Z (CÔTE VENTILATEUR)
25	127720	PIN DIN 6885-A 30X 8X7	CHAVETA DIN 6885-A 30X 8X7	CLAVETTE DIN 6885-A 30X 8X7
26	201756	EXTRACT MOTOR PULLEY (FOR 60 HZ)	POLEA MOTOR CENTRIFUGADO (PARA 60 HZ)	POULIE MOTEUR ESSORAGE (POUR 60 HZ)
	201749	EXTRACT MOTOR PULLEY (FOR 50 HZ)	POLEA MOTOR CENTRIFUGADO (PARA 50 HZ)	POULIE MOTEUR ESSORAGE (POUR 50 HZ)
27	239384	EXTRACT MOTOR BRACKET SHAFT	EJE SOPORTE MOTOR CENTRIFUGADO	AXE SUPPORT MOTEUR ESSORAGE
28	132555	SAFETY WASHER 15 DIN 6799	ARANDELA SEGURIDAD 15 DIN 6799	RONDELLE SECURITE 15 DIN 6799
30	239400	EXTRACT MOTOR BRACKET	SOPORTE MOTOR CENTRIFUGADO	SUPPORT MOTEUR ESSORAGE
31	213173	EXTRACT MOTOR LID	TAPA MOTOR CENTRIFUGADO	COUVERCLE MOTEUR ESSORAGE
32	129296	TRAPEZOIDAL BELT SPZ-1180	CORREA TRAPECIAL SPZ-1180	COURROIE TRAPEZOIDALE SPZ-1180
33	146084	BICR CYL SCREW DIN84 M 4X 10	TOR.CIL.DIN84-4.8 B.TRI.M 4X10	VIS CYL BICR DIN84-4.8 M 4X 10
34	149476	BICR.WASHER B DIN125-ST 4,3	ARAN.B DIN125-ST B.TRI. 4,3	RONDELLE B DIN125-ST BICR.4,3
35	140418	CLAMP UNEX REF 1201	BRIDA UNEX 1201	BRIDE UNEX REF 1201
36	200196	OUTER DRUM FRONT BRACKET	SOPORTE ANTERIOR ENVOLVENTE	SUPPORT ANTERIEUR CUVE
37	146977	HEX SCREW 8G DIN 933 M-10X35	TOR.EX.DIN933-8.8 B.TRI.M10X35	VIS HEX 8G DIN 933 M-10X35
38	149500	BICR.WASHER B DIN125-ST 10,5	ARAN.B DIN125-ST B.TRI.10,5	RONDELLE B DIN125-ST BICR.10,5
39	150193	BICR HEX NUT DIN 934-8 M10	TUER.EX.DIN934-8 B.TRI.M10	ECROU HEX DIN 934-8 BICR.M10

info@zipnasklade.ru
8(800)500-69-51

info@zipnasklade.ru
8(800)500-69-51

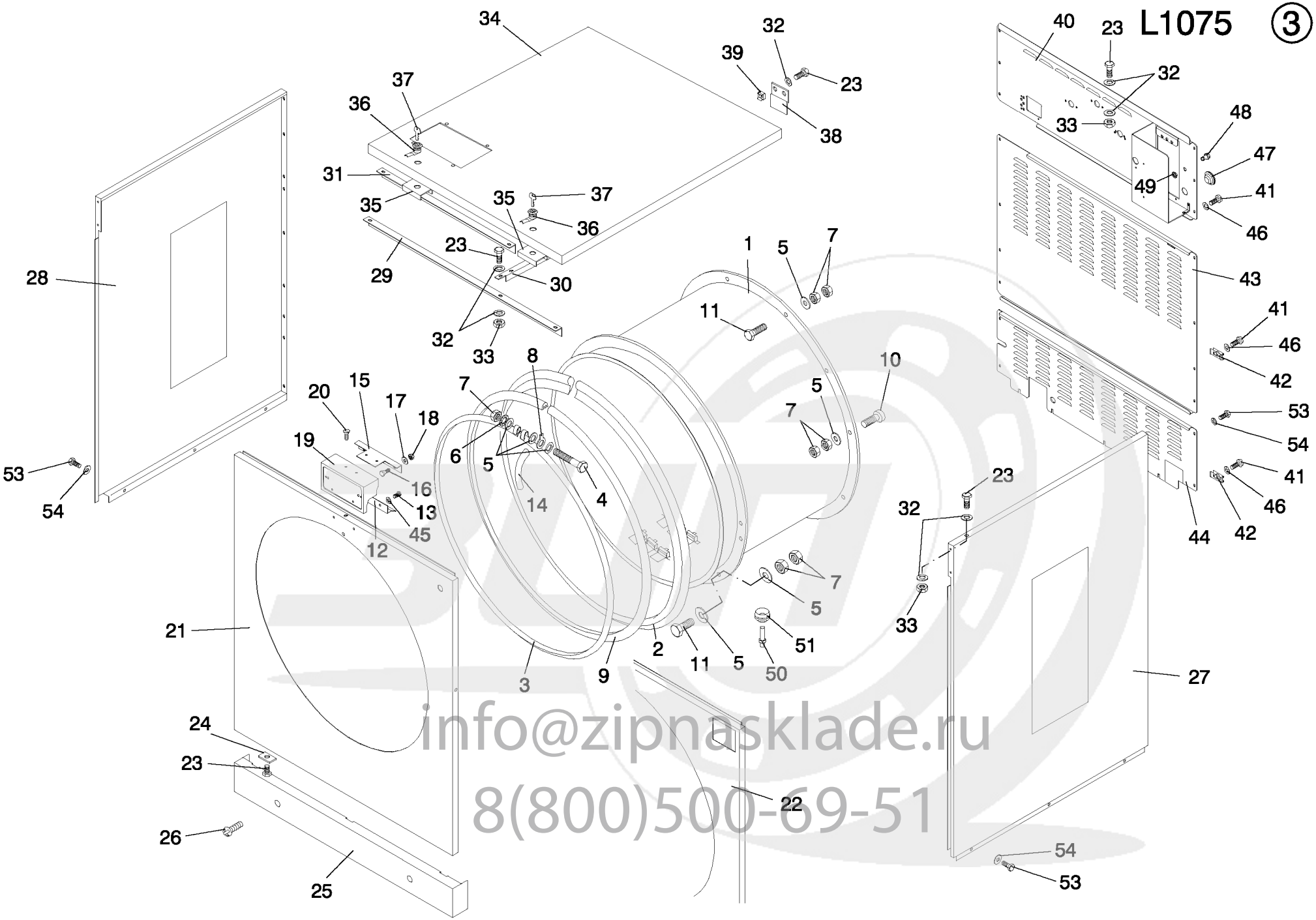

info@zipnasklade.ru
8(800)500-69-51

Nº	REF		DENOMINATION	DENOMINACIÓN	DENOMINATION
1	271692		OUTER-DRUM	ENVOLVENTE	CUVE
2	163808		BLAK PROFILE ETILENO-PROPIL. (L=3190)	PERFIL Ñ ETILENO-PROPIL.NEGRO (L=3190)	PROFILE Ñ ETILENO-PROPIL.NOIR (L=3190)
3	212480		OUTER DRUM FIXING RING	ARO FIJACION ENVOLVENTE	BAGUE FIXATION CUVE
4	146563		BICR HEX SCREW DIN933 M-10X100	TOR.EX.DIN933-88 B.TRI.M10X100	VIS HEX DIN-933-8.8 BI.M10X100
5	149500		BICR.WASHER B DIN125-ST 10,5	ARAN.B DIN125-ST B.TRI.10,5	RONDELLE B DIN125-ST BICR.10,5
6	149690		BICR.EXT TOOT.WASH.DIN6798 M10	ARAN.DEN.EXT.B.TRI.DIN6798M10	RONDEL DEN EX.BICR.DIN6798 M10
7	150193		BICR HEX NUT DIN 934-8 M10	TUER.EX.DIN934-8 B.TRI.M10	ECROU HEX DIN 934-8 BICR.M10
8	280842		EARTH INTAKE	TOMA DE TIERRA	PRISE TERRE
9	131946	@	E PROFILE L.3160 MM	PERFIL E LONGITUD 3160MM ZZ	PROFILE E L.3160 MM
10	144485		ALLEN SCREW DIN 912 M-10X35	TOR.ALLDIN912-8.8 B.TRI.M10X35	VIS ALLEN DIN 912 M-10X35
11	146977		HEX SCREW 8G DIN 933 M-10X35	TOR.EX.DIN933-8.8 B.TRI.M10X35	VIS HEX 8G DIN 933 M-10X35
12	234021		PLATE BRACKET PIECE	PIEZA SOPORTE PLACA	PIECE SUPPORT PLAQUE
13	146019		BICR CYL SCREW DIN 84-4.8 M3X5	TOR.CIL.DIN84-4.8 B.TRI.M 3X5	VIS CYL BICR.DIN 84-4.8 M 3X 5
14	205419		WIRING PROTECTOR	PROTECTOR CABLES	PROTECTEUR CABLES
15	276329		LABEL ASSEMBLY BRACKET	APOYO SOPORTE PLACA	APPUI SUPPORT PLAQUE
16	144881		INOX HEX SCREW DIN933 M 6X16	TOR.EX.DIN933INOX A2-70 M 6X16	VIS HEX INOX DIN933 M 6X16
17	149310		INOX.A2 WASHER DIN125 6,4	ARAN. DIN125 INOX A2 6,4	RONDELLE INOX.A2 DIN125 6,4
18	149971		INOX. HEX. NUT DIN 934 M-6	TUER.EX.DIN934 INOX A2-70 M 6	ECROU HEX. INOX. DIN 934 M-6
19	234062		LABEL BRACKET	SOPORTE PLACA	SUPPORT PLAQUE
20	169060		INOX SCREW DIN 964 M-4X8	TOR.G.SEBO INOX DIN964 M 4X8	VIS T/GOUT.DE SUIF INOX DIN964
21	272385		FRONT COVER	TAPA FRONTAL INOX S-P-C(SIM)	COUVERCLE FRONTAL
22	272401		FRONT COVER	TAPA FRONTAL INOX C(COM)	COUVERCLE FRONTAL
23	146233		BICR.HEX SCREW DIN933-8 M6X15	TOR.EX.DIN933-8.8 B.TRI.M 6X15	VIS HEX DIN933-8.8 BICR.M6X15
24	115741		COVER FIXING PIECE	PIEZA SUJECION TAPA	PIECE ATTACHE COUVERCLES
25	279802		FRONT SOCKET	ZOCALO FRONTAL	SOCLE FRONTAL
26	129932		SCREW DIN 7985 M-6X10	TOR.AL.DIN7985 INOX.PAV.M6X10*	VIS DIN 7985 M-6X10
27	278846		RIGHT SIDE PANEL (INOX)	TAPA LATERAL DERECHA (INOX)	COUVERCLE LATERAL DROIT (INOX)

info@zipnasklade.ru
8(800)500-69-51

Nº	REF	DENOMINATION	DENOMINACIÓN	DENOMINATION
	272765	RIGHT SIDE PANEL (PAINTED)	TAPA LATERAL DERECHA (PINTADA)	COUVERCLE LATERAL DROIT (PEINT)
28	278838	LEFT SIDE PANEL (INOX)	TAPA LATERAL IZQUIERDA (INOX)	COUVERCLE LATERAL GAUCHE (INOX)
	272468	LEFT SIDE PANEL (PAINTED)	TAPA LATERAL IZQUIERDA (PINTADA)	COUVERCLE LATERAL GAUCHE (PEINT)
29	271700	CROSS ANGLE	ANGULO TRANSVERSAL	ANGLE TRANSVERSAL
30	272179	LANE ANGLE	ANGULO LONGITUDINAL	ANGLE LONGITUDINAL
31	275826	SOAP DISPENSER SUPPORT	APOYO DOSIFICADOR	APPUI BAC A PRODUITS
32	149526	BICR.WASHER B DIN125-ST 6,4	ARAN.B DIN125-ST B.TRI. 6,4	RONDELLE B DIN125-ST BICR.6,4
33	150227	BICR HEX NUT DIN934-8 M6	TUER.EX.DIN934-8 B.TRI.M 6	ECROU HEX DIN934-8 BICR.M6
34	276378	UPPER PLATE	TAPA SUPERIOR	COUVERCLE SUPERIEUR
35	242115	UPPER COVER RENFORT	REFUERZO TAPA SUPERIOR	REFORT COUVERCLE SUPERIEUR
36	196915	LOCK RE.20.00.02.05 (KEYS INCLUDED)	CERRADURA REF.20.00.02.05 * (INCLUYE LLAVES)	FERMETURE REF.20.00.02.05 (CLES COMPRISES)
37	196923	LOCK KEY RE.10.41.213	LLAVE REF.10.41.213 COMB.T-205	CLE FERMETURE REF.10.41.213
38	261354	TOP COVER HINGE	BISAGRA TAPA SUPERIOR	CHARNIERE COUVERCLE SUPERIEUR
39	165019	CAGED NUT M-6 0,5-1,5 R.310007-9	TUER.ENJ.M6 0,5-1,5 R.310007-9	*ECROU PRESIONER M-6 0,5-1,5 R.310007-9
40	277707	REAR LID	PANEL POSTERIOR	PANNEAU ARRIERE
41	149153	PLATE SCREW ST-4 80 C/AL.T25	TOR.CHAPA ST-4 80 C/AL.T25 *	VIS PLAQUE ST-4 80 C/AL.T25
42	135228	NUT NUL 506-2A REF. 213048-1	TUERCA SEG.NUL 506-2B 213048-1	ECROU NUL 506-2A REF. 213048-1
43	275909	UPPER REAR PLATE	TAPA POSTERIOR SUPERIOR	COUVERCLE ARRIERE SUPERIEUR
44	275891	LOWER REAR PLATE	TAPA POSTERIOR INFERIOR	COUVERCLE ARRIERE INFERIEUR
45	149484	BICR.WASHER B DIN125-ST 3,2	ARAN.B DIN125-ST B.TRI. 3,2	RONDELLE B.DIN125-ST BICR. 3,2
46	149534	BICR.WASHER B DIN125-ST 5,3	ARAN.B DIN125-ST BICR. 5,3	RONDELLE B BICR.DIN125-ST 5,3
47	139683	CONE ECPC-6	CONO HIMEL ECPC-6	CONE ECPC-6
48	140103	STUFFING-BOX PG-11	PRENSAES.EXADIN 031104 PG-11	PRESSE-ETOUPES PG-11
49	140236	COUNTERNUT PG-11	TUERCA PG 281104 PG-11	CONTREECROU PG-11
50	193862	NTC RESISTANCE	RESISTENCIA NTC	RESISTANCE NTC
51	256149	SENSOR SHEATH LODGING	PASAMUROS SENSOR	LOGEMENT SENSEUR

info@zipnasklade.ru
8(800)500-69-51

Nº	REF	DENOMINATION	DENOMINACIÓN	DENOMINATION
53	328245	SCREW AL.T25 AR.18ESTR.M 6X 10	TOR.ALOM.T25 AR.18ESTR.M 6X10*	VIS.ALOM.T25 AR.18ESTR.M 6X 10
54	153205	WASHER 20X7X2	ARANDELA 20X7X2 TRIVALEN.	RONDELLE 20X7X2

info@zipnasklade.ru
8(800)500-69-51

@	131938	1 METER EPDM E PROFILE	1 METRO PERFIL E EPDM	1 METRE PROFILE E EPDM

Nº	REF	DENOMINATION	DENOMINACIÓN	DENOMINATION
		FROM MACHINE Nr:	A PARTIR DE LA MAQUINA No :	A PARTIR DE LA MACHINE NR:
		1.030.065	1.030.065	1.030.065
44	289868	REAR COVER	TAPA POSTERIOR	COUVERCLE ARRIERE

info@zipnasklade.ru
8(800)500-69-51

Nº	REF	DENOMINATION	DENOMINACIÓN	DENOMINATION
		FROM MACHINE Nr:	A PARTIR DE LA MAQUINA No :	A PARTIR DE LA MACHINE NR:
		1.030.343	1.030.343	1.030.343
22	405704	CGI FRONT COVER (FOR USA AND CANADA ONLY)	TAPA FRONTAL GIRBAU INC.C(COM) (SOLO PARA USA Y CANADA)	COUVERCLE FRONTALE CGI (SEULEMENT POUR USA ET CANADA)

info@zipnasklade.ru
8(800)500-69-51

Nº	REF	DENOMINATION	DENOMINACIÓN	DENOMINATION
		FROM MACHINE Nr: 1.031.522	A PARTIR DE LA MAQUINA No : 1.031.522	A PARTIR DE LA MACHINE NR: 1.031.522
27	447169	RIGHT SIDE PANEL (PRE-COATED)	TAPA LATERAL DERECHA (PRE-COATED)	COUVERCLE LATERAL DROIT (PRE-COATED)
28	447151	LEFT SIDE PANEL (PRE-COATED)	TAPA LATERAL IZQUIERDA (PRE-COATED)	COUVERCLE LATERAL GAUCHE (PRE-COATED)

info@zipnasklade.ru
8(800)500-69-51

info@zipnasklade.ru
8(800)500-69-51

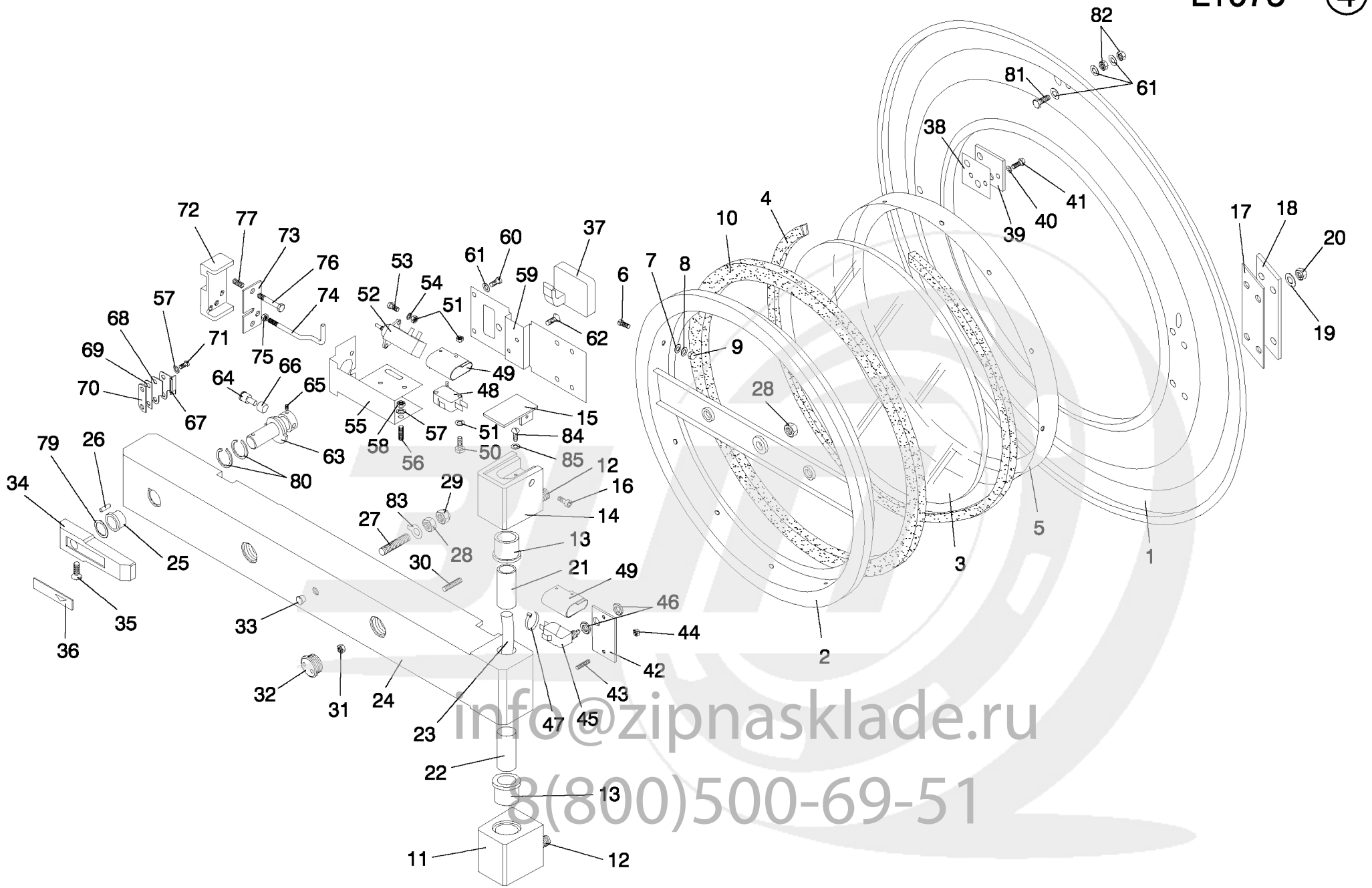

info@zipnasklade.ru
8(800)500-69-51

Nº	REF		DENOMINATION	DENOMINACIÓN	DENOMINATION
1	280974	+	OUTER-DRUM FRONT	FRONTAL ENVOLVENTE	FRONTAL CUVE
2	253336	*	DOOR INNER RING	ARO INTERIOR ESCOTILLA	BAGUE INTERIEUR HUBLOT
3	134353		GLASS SPYHOLE 529X5	MIRILLA CRISTAL D529+-1,5X5 *	VITRE 529X5
4	131904		NEOPRENE A PROFILE L 1665 MM	PERFIL A EPDM BLANCO 1665MM.	PROFILE NEOPRENE A L. 1665 MM
5	248583		OUTER RING	ARO EXTERIOR	BAGUE EXTERIEUR
6	145649		INOX FLAT SCREW DIN85 M 4X10	TOR.PLA.DIN85 INOX A2-70 M4X10	VIS PLAT INOX DIN85 M-4X10 A2
7	116129		SCREW GASKET	JUNTA TORNILLO	JOINT VIS
8	149328		INOX A2 WASHER DIN 125 4,3	ARAN. DIN125 INOX A2 4,3	RONDELLE INOX A2 DIN 125 4,3
9	150151		INOX BLIND NUT DIN 1587 M-4	TUERCA CIE.INOX LAR.DIN1587M 4	ECROU AVEUGLE INOX DIN 1587 M4
10	178996		DOOR GASKET	JUNTA ESCOTILLA	JOINT HUBLOT
11	272989		HINGE (INCLUDING BUMPS AND SLEEVE)	CHARNELA (INCLUYE ESPARRAGO Y COJINETE)	CHARNIÉRE (COMPRIS GOUJONS ET FRETTE)
12	275685		HINGE BUMP	ESPARRAGO CHARNELA	GOUJON CHARNIERE
13	155515		SELFOIL SLEEVE B11B18-25-30/32	COJ. SELFOIL B11B18-25-30/32-4	FRETTE SELFOIL B11B18-25-30/32
14	272971		HINGE (INCLUDING BUMPS AND SLEEVE)	CHARNELA (INCLUYE ESPARRAGO Y COJINETE)	CHARNIÉRE (COMPRIS GOUJONS ET FRETTE)
15	272997		HINGE COVER	TAPA CHARNELA	COUVERCLE CHARNIÉRE
16	161646		ALLEN SCREW DIN 912 M-4X8	TOR.ALLDIN912-8.8 B.TRI.M 4X 8	VIS ALLEN DIN 912 M-4X8
17	161448		HINGE BRACKET GASKET	JUNTA SOPORTE CHARNELA	JOINT SUPPORT CHARNIERE
18	272500		HINGE BRACKET	SOPORTE CHARNELA	SUPPORT CHARNIÉRE
19	149351		INOX A2 WASHER DIN 125 8,4	ARAN. DIN125 INOX A2 8,4	RONDELLE INOX A2 DIN 125 8,4
20	149963		INOX HEX NUT DIN 934 M-8	TUER.EX.DIN934 INOX A2-70 M 8	ECROU HEX. INOX DIN 934 M-8
21	272732		UPPER SEMI-SHAFT	SEMI-EJE SUPERIOR	SEMI-AXE SUPERIEUR
22	272518		LOWER SEMI-SHAFT	SEMI-EJE INFERIOR	SEMI-AXE INFERIEUR
23	205419		WIRING PROTECTOR	PROTECTOR CABLES	PROTECTEUR CABLES
24	272948		DOOR BRACKET	SOPORTE ESCOTILLA	SUPPORT HUBLOT
25	128827		SELFOIL SLEEVE B11B12-17-15/22	COJ. SELFOIL B11B12-17-15/22-3	FRETTE SELFOIL B11B12-17-15/22
26	150771		FLEXIBLE PIN DIN1481 D4X15	PASADOR ELASTICO DIN1481 D4X15	GOUJON ELASTIQUE DIN1481 D4X15
27	254136		DOOR REGULATION BOLT	PERNO REGULACION ESCOTILLA	GOUJON REGLAGE HUBLOT

info@zipnasklade.ru
8(800)500-69-51

Nº	REF	DENOMINATION	DENOMINACIÓN	DENOMINATION
28	149948	INOX. HEX. NUT DIN 934 M-12	TUER.EX.DIN934 INOX A2-70 M12	ECROU HEX. INOX. DIN 934 M-12
29	150656	SELFBLOCKING NUT DIN985 M-12	TUER.AUTOB.DIN985-8 B.TRI.M12	ECROU AUTOBLOCANT DIN985 M-12
30	152116	ALLEN BUMP DIN 913 M-8X45	ESP.ALL.DIN913-10.9 M 8X45	GOUJON ALLEN DIN 913 M-8X45
31	150201	BICR.HEX NUT DIN 934-8 M-8	TUER.EX.DIN934-8 B.TRI.M 8	ECROU HEX.DIN 934-8 BICR.M-8
32	205583	DOOR BRACKET PLUG	TAPON SOPORTE ESCOTILLA	BOUCHON SUPPORT HUBLOT
33	197509	CONICAL END-PIECE REF.26 D12	TOPE CONICO FIG.26 D12	ARRET CONIQUE FIG.26 D12
34	273144	HANDLE	MANECILLA	MANETTE
35	147694	INOX SCREW DIN7991M 5X25	TOR.AV.ALL.INOX DIN7991M 5X 25	VIS INOX DIN7991M 5X25
36	304113	HANDLE PLATE	PLACA MANECILLA	PLAQUE MANETTE
37	128090	LOCKING PIECE	PIEZA CIERRE	PIECE FERMETURE
38	128835	FIXING BASE GASKET	JUNTA BASE FIJACION	JOINT BASE FIXATION
39	201681	FIXING BASE	BASE FIJACION	BASE FIXATION
40	149310	INOX.A2 WASHER DIN125 6,4	ARAN. DIN125 INOX A2 6,4	RONDELLE INOX.A2 DIN125 6,4
41	144923	INOX HEX.SCREW DIN 933 M-6X20	TOR.EX.DIN933INOX A2-70 M 6X20	VIS HEX INOX DIN 933 M-6X20
42	274340	DOOR BRACKET COVER	TAPA SOPORTE ESCOTILLA	COUVERCLE SUPPORT HUBLOT
43	144113	ALLEN BUMP DIN 916 M-6X20	ESP.ALL.DIN916-10.9 M 6X20	GOUJON ALLEN DIN 916 M-6X20
44	150227	BICR HEX NUT DIN934-8 M6	TUER.EX.DIN934-8 B.TRI.M 6	ECROU HEX DIN934-8 BICR.M6
45	196782	MICROSWITCH 83161,344 IW3+161L	MINIRRUPTOR 83161.344 IW3+161L	MINIRRUPTEUR 83161.344 IW3+161
46	272757	MICROSWITCH NUT	TUERCA MICRORRUPTOR	ECROU MICRORRUPTEUR
47	140434	CLAMP 2221	BRIDA UNEX 2221 *	BRIDE 2221
48	279760	MICROSWITCH	MINIRRUPTOR	MICRORRUPTEUR
49	281113	MICROSWITCH ISOLATION	AISLANTE MICRORRUPTOR	ISOLANT MICRORRUPTEUR
50	198127	ZINC HEX SCREW DIN933 M 3X16	TOR.EX.DIN933-4.8 B.TRI.M 3X16	VIS HEX ZINC DIN933 M 3X16
51	149906	INOX. HEX. NUT DIN 934 M-3	TUER.EX.DIN934 INOX A2-70 M 3	ECROU HEX. INOX DIN934 M-3
52	196774	THERMO-ACTUATOR 100331 15	TERMOACTUADOR 100331.15 NTA 6*	THERMO-ACTIONNEMENT 100331 15
53	146035	BICR CYL SCREW DIN84 M-3X10	TOR.CIL.DIN84-4.8 B.TRI.M 3X10	VIS CYL BICR DIN84-4.8 M 3X10
54	152132	INOX A2 WASHER DIN 125	ARAN. DIN125 INOX A2 3,2	RONDELLE INOX A2 DIN 125 3,2
55	272617	THERMO-ACTUATOR BRACKET	SOPORTE TERMOACTUADOR	SUPPORT THERMO-ACTIONNEMENT

info@zipnasklade.ru
8(800)500-69-51

Nº	REF	DENOMINATION	DENOMINACIÓN	DENOMINATION
56	144048	ALLEN BUMP DIN 913 M 5 X 20	ESP.ALL.DIN913-10.9 M 5X20	GOUJON ALLEN DIN 913 M 5X20
57	149534	BICR.WASHER B DIN125-ST 5,3	ARAN.B DIN125-ST BICR. 5,3	RONDELLE B BICR.DIN125-ST 5,3
58	150177	BICR HEX NUT DIN934-8 M5	TUER.EX.DIN934-8 B.TRI.M 5	ECROU HEX DIN934-8 BIC.M5
59	284190	SAFETY LOCK COVER	TAPA CIERRE SEGURIDAD	COUVERCLE FERMETURE SECURITE
60	145656	INOX FLAT SCREW DIN 85 M 5X10	TOR.PLA.DIN85 INOX A2-70 M5X10	VIS PLAT INOX DIN 85 M 5X10 A2
61	149369	INOX A2 WASHER DIN 125 5,3	ARAN. DIN125 INOX A2 5,3	RONDELLE INOX A2 DIN 125 5,3
62	144865	INOX SCREW DIN963 M 5X10 A2-70	TOR.AV.DIN963 INOX A2-70 M5X10	VIS INOX DIN963 M 5X10 A2-70
63	272609	LOCKING BOLT	BULON DE CIERRE	BOULON DE FERMETURE
64	255109	BOLT PIN	PASADOR BULON	GOUJON BOULON
65	184176	ALLEN BUMP DIN916 M5X6	ESP.ALL.DIN916-10.9 M 5X 6	GOUJON ALLEN DIN916 M5X6
66	128033	SELFOIL SLEEVE B11A 8-12-12	COJ. SELFOIL B11A 8-12-12	FRETTE SELFOIL B11A 8-12-12
67	184192	ANTIBLOCKING SPRING	MUELLE ANTIBLOQUEO	RESSORT ANTIBLOCAGE
68	183947	AUXILIARY SPRING	MUELLE AUXILIAR	RESSORT AUXILIAIRE
69	256206	SPRING SUPPLEMENT	SUPLEMENTO MUELLE	SUPPLEMENT RESSORT
70	256172	SPRING SEPARATOR	SEPARADOR MUELLE	SEPARATEUR RESSORT
71	144279	ALLEN SCREW DIN 912 M-5X15	TOR.ALLDIN912-8.8 B.TRI.M 5X15	VIS ALLEN DIN 912 M-5X15
72	272575	SLIDING BLOCKER	BLOQUEADOR DESLIZANTE	BLOQUEUR COULISSANT
73	272583	SLIDING BLOCKING PIECE	PIEZA BLOQUEADOR DESLIZANTE	PIECE BLOCKAGE GLISSANT
74	272591	MICROSWITCH DRIVE	ACCIONADOR MICRORRUPTOR	ACIONNEMENT MICRORRUPTEUR
75	149922	INOX HEX. NUT DIN 934 M-4	TUER.EX.DIN934 INOX A2-70 M 4	ECROU HEX. INOX DIN 934 M-4
76	278622	SLIDING BLOCKING SCREW	TORNILLO BLOQUEADOR DESLIZANTE	VIS BLOQUEUR COULISSANT
77	198069	SPRING	MUELLE COMPENSADOR	RESSORT
79	184200	ADJ. WASHER PS12X18X0,2	ARAN.AJUSTE PS12X18X0,2 DIN988	RONDELLE REGLAGE PS12X18X0,2
80	183566	RING SEEGER SW-18	ANILLO ELASTICO SEEGER SW-18	BAGUE SEEGER SW-18
81	144782	INOX HEX SCREW DIN933 M 5X15	TOR.EX.DIN933INOX A2-70 M 5X15	VIS HEX INOX DIN933 M 5X15
82	149914	INOX HEX. NUT DIN 934 M-5	TUER.EX.DIN934 INOX A2-70 M 5	ECROU HEX. INOX DIN 934 M-5
83	280859	EARTH INTAKE	TOMA DE TIERRA	PRISE DE TERRE
84	146076	BICR ROUND SCREW DIN84 M 4X 8	TOR.CIL.DIN84-4.8 B.TRI.M 4X 8	VIS ROND BICR DIN84-4.8 M 4X 8

info@zipnasklade.ru
8(800)500-69-51

Nº	REF	DENOMINATION	DENOMINACIÓN	DENOMINATION
85	149732	BICR.EXT TOOT.WASH DIN6798 M4	ARAN.DEN.EXT.B.TRI.DIN6798M 4	RONDEL.DEN.EX.BICR.DIN6798 M4

info@zipnasklade.ru
8(800)500-69-51

+	277178	FRONT(WITH DOOR AND LOCK)	FRONTAL(CON ESCOTILLA Y CIERRE	FRONTAL(AVEC HUBLOT ET FERMET)
*	253328	COMPLETE DOOR	ESCOTILLA COMPLETA	HUBLOT COMPLET

Nº	REF	DENOMINATION	DENOMINACIÓN	DENOMINATION
		FROM MACHINE Nr:	A PARTIR DE LA MAQUINA No :	A PARTIR DE LA MACHINE NR:
		1.030.117	1.030.117	1.030.117
72	289389	SLIDING BLOCKER	BLOQUEADOR DESLIZANTE	BLOQUEUR COULISSANT

info@zipnasklade.ru
8(800)500-69-51

Nº	REF	DENOMINATION	DENOMINACIÓN	DENOMINATION
		FROM MACHINE Nr:	A PARTIR DE LA MAQUINA No :	A PARTIR DE LA MACHINE NR:
		1.030.521	1.030.521	1.030.521
34	408823	HANDLE	MANECILLA	MANETTE
35	150862	FLEXIBLE PIN DIN1481 D5X30	PASADOR ELASTICO DIN1481 D5X30	GOUJON ELASTIQUE DIN1481 D5X30
63	408831	LOCKING BOLT	BULON DE CIERRE	BOULON DE FERMETURE

info@zipnasklade.ru
8(800)500-69-51

info@zipnasklade.ru
8(800)500-69-51

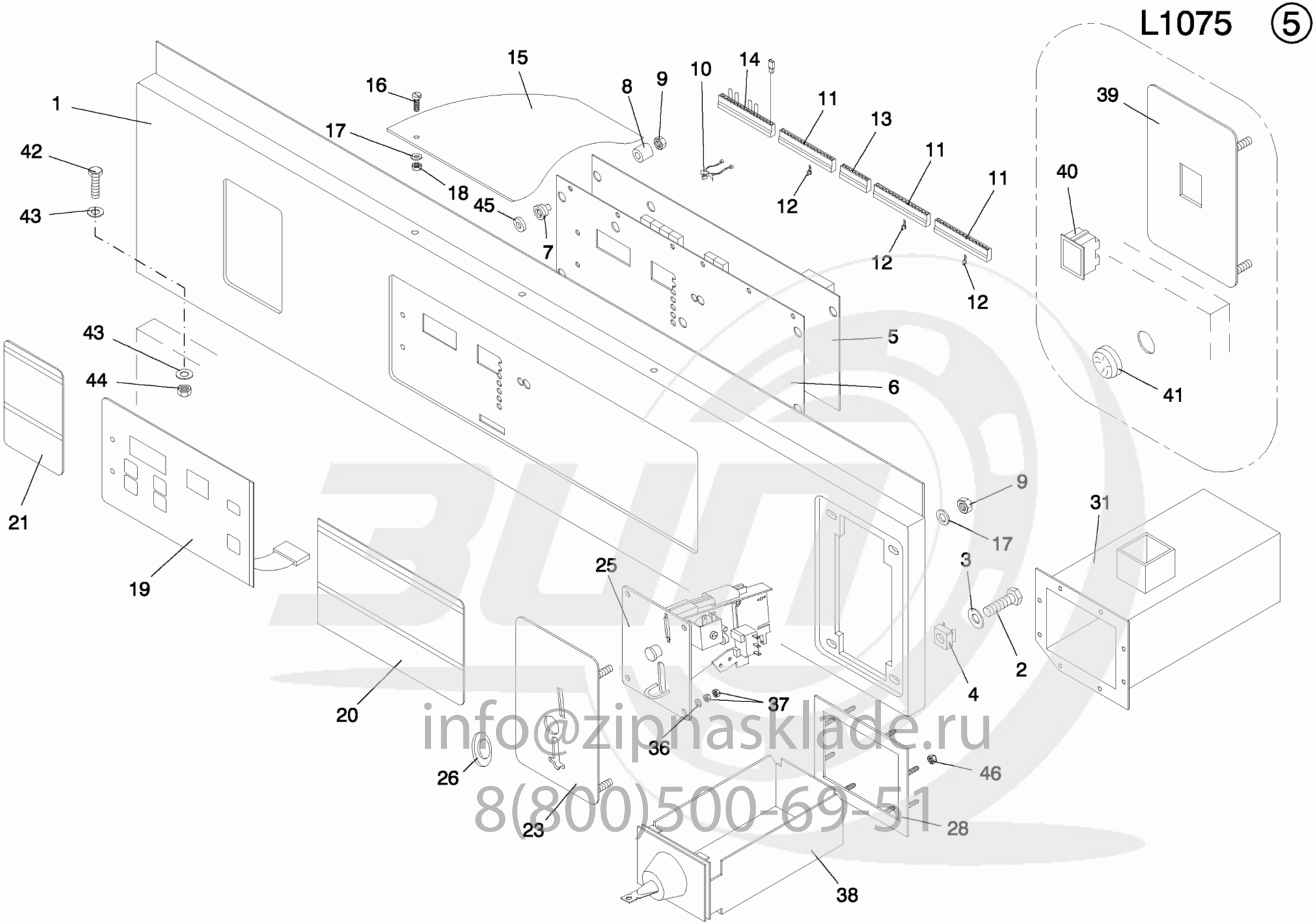

info@zipnasklade.ru
8(800)500-69-51

Nº	REF	DENOMINATION	DENOMINACIÓN	DENOMINATION
1	280776	CONTROL PANEL	PANEL DE MANDOS	PANNEAL COMMANDES
2	144881	INOX HEX SCREW DIN933 M 6X16	TOR.EX.DIN933INOX A2-70 M 6X16	VIS HEX INOX DIN933 M 6X16
3	149310	INOX.A2 WASHER DIN125 6,4	ARAN. DIN125 INOX A2 6,4	RONDELLE INOX.A2 DIN125 6,4
4	165019	CAGED NUT M-6 0,5-1,5 R.310007-9	TUER.ENJ.M6 0,5-1,5 R.310007-9	*ECROU PRESIONER M-6 0,5-1,5 R.310007-9
5	300798	PROCESSOR BOARD SM/CM	PLACA MICROPROCESADOR SM/CM	PLAQUE MICROPROCESSEUR SM/CM
	303354	EPROM FOR WASHER SM3/CM3 VER10	EPROM LAVADORAS SM3/CM3 VER10	EPROM P.MACH.A LAVER SM3/CM3V10
	303933	EEPROM ST24C04	EPROM ST24C04	EEPROM ST24C04
	187203	INPUT OPTOISOLATOR 4N35	OPTOACOPLADOR ENTRADA 4N35	OPTOISOLATOR ENTREE 4N35
	187211	OUTPUT OPTOISOLATOR	OPTOACOPLADOR SALIDA	OPTOISOLATOR SORTIE
	188003	DISPLAY TDSR 5160	DISPLAY TDSR 5160	DISPLAY TDSR 5160
6	278317	PROCESSOR ISOLATOR	AISLANTE MICROPROCESADOR	ISOLANT MICROPROCESSEUR
7	277392	PLATE-CONTROL SEPARATOR	SEPARADOR PANEL-PLACA	SEPARATEUR TABLEAU-PLAQUE
8	277400	NUT-PLATE SEPARATOR	SEPARADOR PLACA-TUERCA	SEPARATEUR PLAQUE-ECROU
9	150185	BICR.HEX.NUT DIN934-8 M4	TUER.EX.DIN934-8 B.TRI.M 4	ECROU HEX.DIN934-8 BICR.M4
10	199893	CLAMP STL-450-3-01	ABRAZADERA STL-3N-450	BRIDE STL-450-3-01
11	197301	PROTECTOR AMP-UNYT 1-640029-6	PROTECTOR 16 VIAS	PROTECTEUR AMP-UNYT 1-640029-6
12	197426	POLARIZATION AMP 640180-1	POSICIONADOR AMP 640180-1	POLARIZATION AMP 640180-1
13	199810	PROTECTOR AMP-UNYT 640029-8	PROTECTOR TE REF. 640136-8	PROTECTEUR AMP-UNYT 640029-8
14	279075	IDENTIFICATION PLUG	CONECTORA IDENTIFICACION	CONNECTEUR IDENTIFICATION
15	258277	PROCESSOR BOARD LID	TAPA PLACA MICROPROCESADOR	COUVERCLE PLAQ.MICROPROCESSEUR
16	145649	INOX FLAT SCREW DIN85 M 4X10	TOR.PLA.DIN85 INOX A2-70 M4X10	VIS PLAT INOX DIN85 M-4X10 A2
17	219758	INOX WASHER 12X4X1,5	ARANDELA 12X4X1.5 INOX	RONDELLE 12X4X1,5 INOX
18	132043	SELFBLOCKING NUT DIN985 M 4	TUER.AUTOBL.DIN985-8 B.TRI.M 4	ECROU AUTOBLOCANT DIN985 M 4
19	340885	CONT.WASHER KEYBOARD CM (FOR USA AND CANADA ONLY)	TECLADO LAVADORA CM CONT. (SOLO PARA USA Y CANADA)	CLAVIER LAVEUSE CM CONT. (SEULEMENT POUR USA ET CANADA)
	300681	WASHER KEYBOARD CM (EXCEPT FOR USA AND CANADA)	TECLADO LAVADORA CM (EXCEPTO PARA USA Y CANADA)	CLAVIER LAVEUSE CM (SAUF POUR USA ET CANADA)
20	327924	CONTINENTAL OPERAT. INST.PLATE (FOR USA AND CANADA ONLY)	PLACA INSTR.FUNCION CONTINENT. (SOLO PARA USA Y CANADA)	PLAQUE INSTR.FONCT.CONTINENTAL (SEULEMENT POUR USA ET CANADA)

info@zipnasklade.ru
8(800)500-69-51

Nº	REF	DENOMINATION	DENOMINACIÓN	DENOMINATION
	301317	ENGLISH OPERATION INSTR.PLATE (EXCEPT FOR USA AND CANADA)	PLACA INSTR.FUNCION. IN. (EXCEPTO PARA USA Y CANADA)	PLAQUE INST.FONCTION ANGLAIS (SAUF POUR USA ET CANADA)
	301325	SPANISH OPERATION INSTR.PLATE	PLACA INSTR.FUNCION. ES.	PLAQUE INST.FONCTION ESPAGNOL
	301333	FRENCH OPERATION INSTR.PLATE	PLACA INSTR.FUNCION. FR.	PLAQUE INST.FONCTION FRANCAIS
21	304030	ENGLISH CONT.SAFETY INS.PLATE (FOR USA AND CANADA ONLY)	PLACA INSTR.SEGURIDAD CONT. (SOLO PARA USA Y CANADA)	PLAQUE INSTR.SECUR.CONTINENTAL (SEULEMENT POUR USA ET CANADA)
	301069	ENGLISH SAFETY INSTR.PLATE (EXCEPT FOR USA AND CANADA)	PLACA INSTR.SEGURIDAD IN. (EXCEPTO PARA USA Y CANADA)	PLAQUE INSTR.SECURITE ANGLAIS (SAUF POUR USA ET CANADA)
	301077	SPANISH SAFETY INSTR.PLATE	PLACA INSTR.SEGURIDAD ES.	PLAQUE INSTR.SECURITE ESPAGNOL
	301085	FRENCH SAFETY INSTR.PLATE	PLACA INSTR.SEGURIDAD FR.	PLAQUE INSTR.SECURITE FRANCAIS
23	278333	COIN METER PLATE	PLACA MONEDERO	PLAQUE MONNAYEUR
25	130831	COIN-METER B-400 TOKEN GIRBAU OTHER COIN-METERS B-400 (TO SPECIFY COIN)	MONEDERO ISMEA B-400 FICHA G.* OTROS MONEDEROS B-400 (ESPECIFICAR MONEDA)	MONNAYEUR B-400 JETON GIRBAU AUTRES MONNAYEURS B-400 (SPECIFIER MONNAI)
	182295	COIN-METER ELECTROMAGNET B-400	ELECT.MONE.ISMEA B400 220V ZZ*	ELECTROAIMANT MONNAYEUR B-400
	177022	COIN-METER MICROSWITCH B400	MICRORRUP.MONEDERO ISMEA B400*	MICRORRUPTEUR MONNAYEUR B400
26	147710	TOKEN GIRBAU 24R15	FICHA 24R15 CON ANAGRAM.GIRBAU	JETON GIRBAU 24R15
27	149476	BICR.WASHER B DIN125-ST 4,3	ARAN.B DIN125-ST B.TRI. 4,3	RONDELLE B DIN125-ST BICR.4,3
28	278234	COIN BOX PLATE	CARATULA CAJON MONEDAS	PLAQUE BOITE MONNAIES
29	280768	BOX BRACKET FIXING	SUJECION APOYO CAJON	FIXATION APPUI BOITE
30	161646	ALLEN SCREW DIN 912 M-4X8	TOR.ALLDIN912-8.8 B.TRI.M 4X 8	VIS ALLEN DIN 912 M-4X8
31	278127	BOX SUPPORT	APOYO CAJON	APPUI BOITE
36	149484	BICR.WASHER B DIN125-ST 3,2	ARAN.B DIN125-ST B.TRI. 3,2	RONDELLE B.DIN125-ST BICR. 3,2
37	149906	INOX. HEX. NUT DIN 934 M-3	TUER.EX.DIN934 INOX A2-70 M 3	ECROU HEX. INOX DIN934 M-3
38	169169	COIN BOX UG400A GI	CAJA MONEDAS UG400A GI *	BOITE MONNAIE UG400A GI
39	279745	PUSH-BUTTON PLATE	PLACA PULSADOR	PLAQUE PULSATEUR
40	138339	PUSH-BUTTON C6061AL	PULSADOR C6061AL *	BOUTON-POUSSOIR C6061AL
41	160101	THERMOSTAT INTAKE STOPPER	TAPON TOMA TERMOSTATO	BOUCHON PRISE THERMOSTAT
42	146274	BICR.HEX SCREW DIN933-8 M-5X10	TOR.EX.DIN933-8.8 B.TRI.M 5X10	VIS HEX.BICR.DIN933-8.8 M-5X10
43	149534	BICR.WASHER B DIN125-ST 5,3	ARAN.B DIN125-ST BICR. 5,3	RONDELLE B BICR.DIN125-ST 5,3

info@zipnasklade.ru
8(800)500-69-51

Nº	REF	DENOMINATION	DENOMINACIÓN	DENOMINATION
44	150177	BICR HEX NUT DIN934-8 M5	TUER.EX.DIN934-8 B.TRI.M 5	ECROU HEX DIN934-8 BIC.M5
45	279901	SEPARATOR WASHER	ARANDELA 13X6.25X 2 NYLON	RONDELLE SEPARATEUR
		MICROPROCESSOR BOARD CHANGE KIT	KIT CAMBIO PLACA MICROPROCESADOR	KIT CHANGEMENT PLAQUE MICROPROCESSEUR
	615633	MICROP.SPARE BOARD SM/CM S-3/4	PLACA MICROP. REC. SM/CM S-3/4	CARTE MICROP.DETACHE SM/CM S-3/4

info@zipnasklade.ru
8(800)500-69-51

Nº	REF	DENOMINATION	DENOMINACIÓN	DENOMINATION
		FROM MACHINE Nr:	A PARTIR DE LA MAQUINA No :	A PARTIR DE LA MACHINE NR:
		1.030.343	1.030.343	1.030.343
27	149476	CANCELLED	ANULADO	ANNULE
28	294405	PLATE (FOR USA AND CANADA ONLY)	CARATULA (SOLO PARA USA Y CANADA)	PLAQUE (SEULEMENT POUR USA ET CANADA)
29	280768	CANCELLED	ANULADO	ANNULE
30	161646	CANCELLED	ANULADO	ANNULE
31	294041	BOX SUPPORT (FOR USA AND CANADA ONLY)	APOYO CAJON (SOLO PARA USA Y CANADA)	APPUI BOITE (SEULEMENT POUR USA ET CANADA)
46	176792	INOX SELF-BLOCK.NUT DIN985 M 4	TUER.AUTOBL.DIN985 INOX M 4*	ECROU AUTOBLOC.INOX DIN985 M 4

info@zipnasklade.ru
8(800)500-69-51

Nº	REF	DENOMINATION	DENOMINACIÓN	DENOMINATION
		FROM MACHINE Nr:	A PARTIR DE LA MAQUINA No :	A PARTIR DE LA MACHINE NR:
		1.031.112	1.031.112	1.031.112
23	281121	COIN-METER PLATE	PLACA MONEDERO	PLAQUE MONNAYEUR
25	338962	COIN-METER D10.WK 0,25 USD	MONEDERO D10.WK 0,25 USD *	MONNAYEUR D10.WK 0,25 USD
	338970	COIN-METER D10.WK TOKEN GIRBAU	MONEDERO D10.WK FICHA GIR.*	MONNAYEUR D10.WK JETON GIRBAU
	177022	CANCELLED	ANULADO	ANNULE
	182295	CANCELLED	ANULADO	ANNULE
	447821	COIN-METER MICROSWITCH MUNZ.D10WK	MICRORRUP.MONEDERO MUNZ.D10WK	MICRORRUP.MONNAYEUR MUNZ.D10WK

info@zipnasklade.ru
8(800)500-69-51

Nº	REF	DENOMINATION	DENOMINACIÓN	DENOMINATION
		FROM MACHINE Nr:	A PARTIR DE LA MAQUINA No :	A PARTIR DE LA MACHINE NR:
		1.031.320	1.031.320	1.031.320
19	350496	WASHER KEYBOARD CM CONT. (FOR USA AND CANADA ONLY)	TECLADO LAVADORA CM CONT. (SOLO PARA USA Y CANADA)	CLAVIER LAVEUSE CM CONT. (SEULEMENT POUR USA ET CANADA)
	515486	BILINGUAL CONT. WASHER KEYBOARD CM (FOR USA AND CANADA ONLY)	TECLADO LAVAD.CM CONT BILINGÜE (SOLO PARA USA Y CANADA)	CLAVIER LAVEUSE CM CONT.BILINGUE (SEULEMENT POUR USA ET CANADA)
20	350504	CONTINENTAL OPERAT.INSTR.PLATE (FOR USA AND CANADA ONLY)	PLACA INSTR.FUNCION.CONTINENT. (SOLO PARA USA Y CANADA)	PLAQUE INST.FONCTION CONTINENT (SEULEMENT POUR USA ET CANADA)
21	350553	CONTINENTAL SAFETY INSTR.PLATE (FOR USA AND CANADA ONLY)	PLACA INSTR.SEGURIDAD CONT. (SOLO PARA USA Y CANADA)	PLAQUE INSTR.SECURITE CONTIN. (SEULEMENT POUR USA ET CANADA)

info@zipnasklade.ru
8(800)500-69-51

Nº	REF	DENOMINATION	DENOMINACIÓN	DENOMINATION
		FROM MACHINE Nr: 1.032.339	A PARTIR DE LA MAQUINA No : 1.032.339	A PARTIR DE LA MACHINE NR: 1.032.339
5	10057628	SM/CM MICROPROCESSOR BOARD S3/4	PLACA MICROPROCESADOR SM/CM S-3/4	CARTE MICROPROCESSEUR SM/CM S3/4

info@zipnasklade.ru
8(800)500-69-51

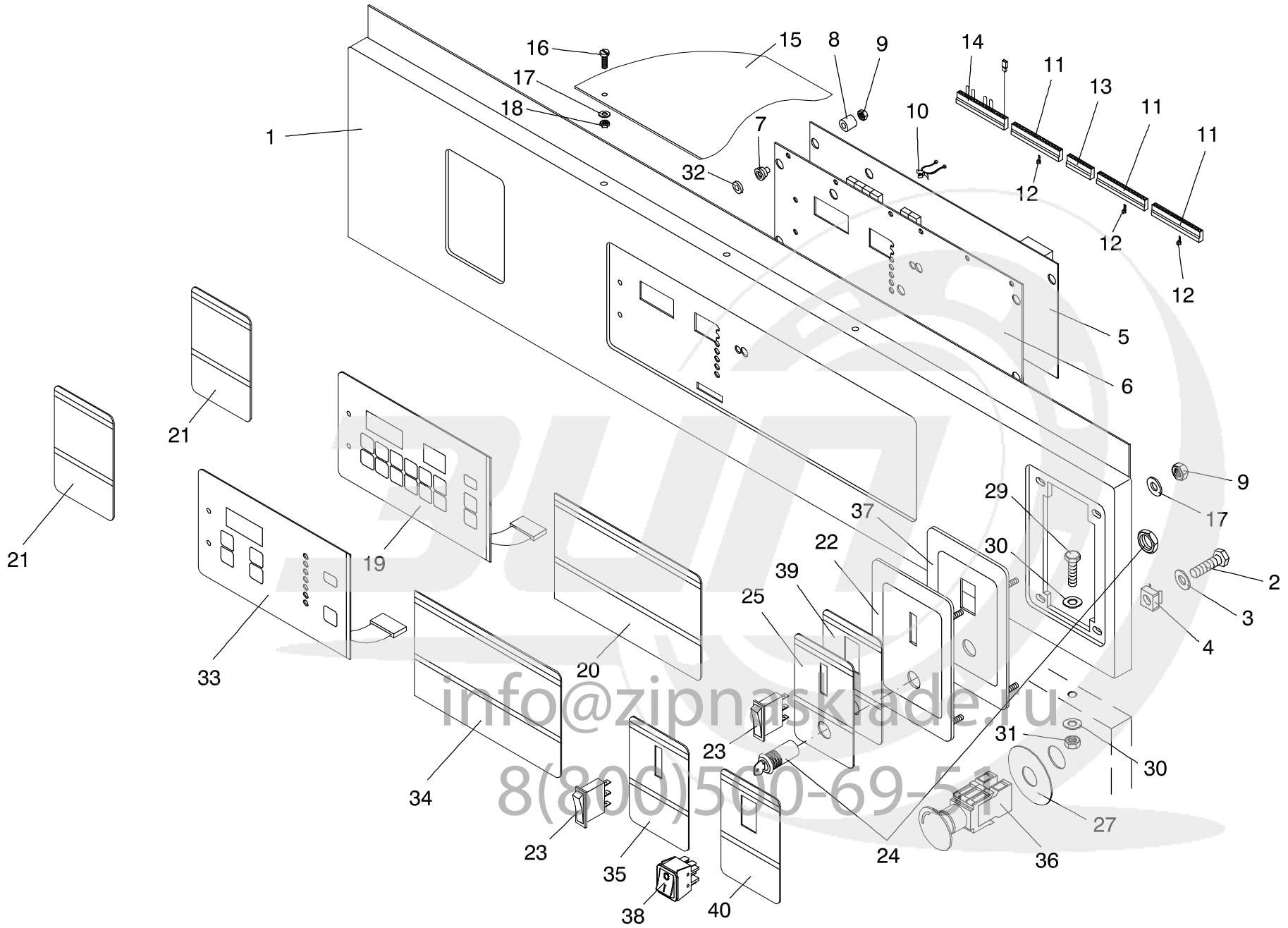

info@zipnasklade.ru
8(800)500-69-51

U.12198

Nº	REF	DENOMINATION	DENOMINACIÓN	DENOMINATION
1	280776	CONTROL PANEL	PANEL DE MANDOS	PANNEAL COMMANDES
2	144881	INOX HEX SCREW DIN933 M 6X16	TOR.EX.DIN933INOX A2-70 M 6X16	VIS HEX INOX DIN933 M 6X16
3	149310	INOX.A2 WASHER DIN125 6,4	ARAN. DIN125 INOX A2 6,4	RONDELLE INOX.A2 DIN125 6,4
4	165019	CAGED NUT M-6 0,5-1,5 R.310007-9	TUER.ENJ.M6 0,5-1,5 R.310007-9	*ECROU PRESIONER M-6 0,5-1,5 R.310007-9
5	300806	PROCESSOR BOARD PM (FOR PM)	PLACA MICROPROCESADOR PM (PARA PM)	PLAQUE MICROPROCESSEUR PM (POUR PM)
	300798	PROCESSOR BOARD SM/CM (FOR SM)	PLACA MICROPROCESADOR SM/CM (PARA SM)	PLAQUE MICROPROCESSEUR SM/CM (POUR SM)
	303347	EPROM FOR WASHER PM3 VER05 (FOR PM)	EPROM LAVADORAS PM3 VER05 (PARA PM)	EPROM POUR MACH.A LAVER PM3 V4 (POUR PM)
	303354	EPROM FOR WASHER SM3/CM3 VER10 (FOR SM)	EPROM LAVADORAS SM3/CM3 VER10 (PARA SM)	EPROM P.MACH.A LAVER SM3/CM3V10 (POUR SM)
	187195	RAM ZERO POWER MK48Z08-10 (FOR PM)	RAM ZERO POWER MK48Z08-10 (PARA PM)	RAM ZERO POWER MK48Z08-10 (POUR PM)
	303933	EEPROM ST24C04 (FOR SM)	EPROM ST24C04 (PARA SM)	EEPROM ST24C04 (POUR SM)
	187203	INPUT OPTOISOLATOR 4N35	OPTOACOPLADOR ENTRADA 4N35	OPTOISOLATOR ENTREE 4N35
	187211	OUTPUT OPTOISOLATOR	OPTOACOPLADOR SALIDA	OPTOISOLATOR SORTIE
	188003	DISPLAY TDSR 5160	DISPLAY TDSR 5160	DISPLAY TDSR 5160
6	278317	PROCESSOR ISOLATOR	AISLANTE MICROPROCESADOR	ISOLANT MICROPROCESSEUR
7	277392	PLATE-CONTROL SEPARATOR	SEPARADOR PANEL-PLACA	SEPARATEUR TABLEAU-PLAQUE
8	277400	NUT-PLATE SEPARATOR	SEPARADOR PLACA-TUERCA	SEPARATEUR PLAQUE-ECROU
9	150185	BICR.HEX.NUT DIN934-8 M4	TUER.EX.DIN934-8 B.TRI.M 4	ECROU HEX.DIN934-8 BICR.M4
10	199893	CLAMP STL-450-3-01	ABRAZADERA STL-3N-450	BRIDE STL-450-3-01
11	197301	PROTECTOR AMP-UNYT 1-640029-6	PROTECTOR 16 VIAS	PROTECTEUR AMP-UNYT 1-640029-6
12	197426	POLARIZATION AMP 640180-1	POSICIONADOR AMP 640180-1	POLARIZATION AMP 640180-1
13	199810	PROTECTOR AMP-UNYT 640029-8	PROTECTOR TE REF. 640136-8	PROTECTEUR AMP-UNYT 640029-8
14	279091	IDENTIFICATION PLUG (FOR PM)	CONECTORA IDENTIFICACION (PARA PM)	CONNECTEUR IDENTIFICATION (POUR PM)
	279083	IDENTIFICATION PLUG (FOR SM)	CONECTORA IDENTIFICACION (PARA SM)	CONNECTEUR IDENTIFICATION (POUR SM)
15	258277	PROCESSOR BOARD LID	TAPA PLACA MICROPROCESADOR	COUVERCLE PLAQ.MICROPROCESSEUR

info@zipnasklade.ru
8(800)500-69-51

Nº	REF	DENOMINATION	DENOMINACIÓN	DENOMINATION
16	145649	INOX FLAT SCREW DIN85 M 4X10	TOR.PLA.DIN85 INOX A2-70 M4X10	VIS PLAT INOX DIN85 M-4X10 A2
17	219758	INOX WASHER 12X4X1,5	ARANDELA 12X4X1.5 INOX	RONDELLE 12X4X1,5 INOX
18	132043	SELFBLOCKING NUT DIN985 M 4	TUER.AUTOBL.DIN985-8 B.TRI.M 4	ECROU AUTOBLOCANT DIN985 M 4
19	300673	WASHER KEYBOARD PM (FOR PM)	TECLADO LAVADORA PM (PARA PM)	CLAVIER LAVEUSE PM (POUR PM)
20	303982	CONTINENTAL OPERAT.INSTR.PLATE (FOR PM) (FOR USA AND CANADA ONLY)	PLACA INSTR. FUNCION CONTINENT (PARA PM) (SOLO PARA USA Y CANADA)	PLAQUE INSTR.FONCT.CONTINENTAL (POUR PM) (SEULEMENT POUR USA ET CANADA)
	301440	ENGLISH OPERATION INSTR.PLATE (FOR PM) (EXCEPT FOR USA AND CANADA)	PLACA INSTR.FUNCION. IN. (PARA PM) (EXCEPTO PARA USA Y CANADA)	PLAQUE INSTR.FONCTION ANGLAIS (POUR PM) (SAUF POUR USA ET CANADA)
	301457	SPANISH OPERATION INSTR.PLATE (FOR PM)	PLACA INSTR.FUNCION. ES. (PARA PM)	PLAQUE INSTR.FONCTION ESPAGNOL (POUR PM)
	301465	FRENCH OPERATION INSTR.PLATE (FOR PM)	PLACA INSTR.FUNCION. FR. (PARA PM)	PLAQUE INSTR.FONCTION FRANCAIS (POUR PM)
21	304030	ENGLISH CONT.SAFETY INS.PLATE (FOR USA AND CANADA ONLY)	PLACA INSTR.SEGURIDAD CONT. (SOLO PARA USA Y CANADA)	PLAQUE INSTR.SECUR.CONTINENTAL (SEULEMENT POUR USA ET CANADA)
	301069	ENGLISH SAFETY INSTR.PLATE (EXCEPT FOR USA AND CANADA)	PLACA INSTR.SEGURIDAD IN. (EXCEPTO PARA USA Y CANADA)	PLAQUE INSTR.SECURITE ANGLAIS (SAUF POUR USA ET CANADA)
	301077	SPANISH SAFETY INSTR.PLATE	PLACA INSTR.SEGURIDAD ES.	PLAQUE INSTR.SECURITE ESPAGNOL
	301085	FRENCH SAFETY INSTR.PLATE	PLACA INSTR.SEGURIDAD FR.	PLAQUE INSTR.SECURITE FRANCAIS
22	277384	MICRO SUPPLEMENT PANEL	PANEL SUPLEMENTO MICRO.	PANNEAU SUPPLEMENT MICRO
23	300780	SWITCH C1500AL AAG WHITE	INTERRUPTOR C1500AL AAG	INTERRUPTEUR C1500AL AAG BLANC
24	256230	FUNCTION SWITCH (FOR PM)	CONMUTADOR FUNCIONES (PARA PM)	COMMUTATEUR FONCTIONS (POUR PM)
25	304097	GENERAL CONTROL PLATE (FOR PM) (FOR USA AND CANADA ONLY)	PLACA MANDOS GENERALES (PARA PM) (SOLO PARA USA Y CANADA)	PLAQUE COMMANDES GENERALES (POUR PM) (SEULEMENT POUR USA ET CANADA)
	301994	GENERAL CONTROL PLATE (FOR PM) (EXCEPT FOR USA AND CANADA)	PLACA MANDOS GENERALES (PARA PM) (EXCEPTO PARA USA Y CANADA)	PLAQUE COMMANDES GENERALES (POUR PM) (SAUF POUR USA ET CANADA)
26	192310	MUSHROOM PUSH-BUTTON	PUL.HONGO ENCL.3SB10 (341529)	PULSATEUR TYPE COUP DE POING
27	192294	YELLOW RING	ARO AMARILLO	BAGUE JAUNE
28	197343	CONNECTION ELEMENT 3SB13 20-0A	ELEMENTO CONEXION 3SB13 20-0A	ELEMENT CONNEXION 3SB13 20-0A
29	146274	BICR.HEX SCREW DIN933-8 M-5X10	TOR.EX.DIN933-8.8 B.TRI.M 5X10	VIS HEX.BICR.DIN933-8.8 M-5X10

info@zipnasklade.ru
8(800)500-69-51

Nº	REF	DENOMINATION	DENOMINACIÓN	DENOMINATION
30	149534	BICR.WASHER B DIN125-ST 5,3	ARAN.B DIN125-ST BICR. 5,3	RONDELLE B BICR.DIN125-ST 5,3
31	150177	BICR HEX NUT DIN934-8 M5	TUER.EX.DIN934-8 B.TRI.M 5	ECROU HEX DIN934-8 BIC.M5
32	279901	SEPARATOR WASHER	ARANDELA 13X6.25X 2 NYLON	RONDELLE SEPARATEUR
33	300699	WASHER KEYBOARD SM (FOR SM)	TECLADO LAVADORA SM (PARA SM)	CLAVIER LAVEUSE SM (POUR SM)
34	303974	CONTINENTAL OPERAT.INSTR.PLATE (FOR SM) (FOR USA AND CANADA ONLY)	PLACA INSTR. FUNCION CONTINENT (PARA SM) (SOLO PARA USA Y CANADA)	PLAQUE INSTR.FONCT.CONTINENTAL (POUR SM) (SEULEMENT POUR USA ET CANADA)
	301192	ENGLISH OPERATION INSTR.PLATE (FOR SM) (EXCEPT FOR USA AND CANADA)	PLACA INSTR.FUNCION. IN. (PARA SM) (EXCEPTO PARA USA Y CANADA)	PLAQUE INSTR.FONCTION ANGLAIS (POUR SM) (SAUF POUR USA ET CANADA)
	301200	SPANISH OPEARATION INSTR.PLATE (FOR SM)	PLACA INSTR.FUNCION. ES. (PARA SM)	PLAQUE INST.FONCTION ESPAGNOL (POUR SM)
	301218	FRENCH OPERATION INSTR.PLATE (FOR SM)	PLACA INSTR.FUNCION. FR. (PARA SM)	PLAQUE INSTR.FONCTION FRANCAIS (POUR SM)
35	304089	START-STOP PLATE (FOR SM) (FOR USA AND CANADA ONLY)	PLACA MARCHA-PARO (PARA SM) (SOLO PARA USA Y CANADA)	PLAQUE MARCHE-ARRET (POUR SM) (SEULEMENT POUR USA ET CANADA)
	301986	START-STOP PLATE (FOR SM) (EXCEPT FOR USA AND CANADA)	PLACA MARCHA PARO (PARA SM) (EXCEPTO PARA USA Y CANADA)	PLAQUE MARCHE-ARRET (POUR SM) (SAUF POUR USA ET CANADA)
		MICROPROCESSOR BOARD CHANGE KIT	KIT CAMBIO PLACA MICROPROCESADOR	KIT CHANGEMENT PLAQUE MICROPROCESSEUR
	571695	MICROP.SPARE BOARD PM S-3/4	PLACA MICROP. REC. PM S-3/4	CARTE MICROP.DETACHE PM S-3/4

info@zipnasklade.ru
8(800)500-69-51

Nº	REF	DENOMINATION	DENOMINACIÓN	DENOMINATION
		FROM MACHINE Nr:	A PARTIR DE LA MAQUINA No :	A PARTIR DE LA MACHINE NR:
		1.030.001	1.030.001	1.030.001
26	192310	CANCELLED	ANULADO	ANNULE
28	197343	CANCELLED	ANULADO	ANNULE
36	341529	EMERGENCY STOP LC	PARO EMERGENCIA LC	ARRET EMERGENCE LC

info@zipnasklade.ru
8(800)500-69-51

Nº	REF	DENOMINATION	DENOMINACIÓN	DENOMINATION
		FROM MACHINE Nr: 1.032.272	A PARTIR DE LA MAQUINA No : 1.032.272	A PARTIR DE LA MACHINE NR: 1.032.272
37	633065	MICRO SUPPLEMENT PANEL	PANEL SUPLEMENTO MICRO.	PANNEAU SUPPLEMENT MICRO
38	587519	SWITCH C1550AL	INTERRUPTOR C1550AL	INTERRUPTEUR C1550AL
39	633099	GENERAL CONTROL PLATE (FOR PM) (FOR USA AND CANADA ONLY)	PLACA MANDOS GENERALES (PARA PM) (SOLO PARA USA Y CANADA)	PLAQUE COMMANDES GENERALES (POUR PM) (SEULEMENT POUR USA ET CANADA)
	633081	GENERAL CONTROL PLATE (FOR PM) (EXCEPT FOR USA AND CANADA)	PLACA MANDOS GENERALES (PARA PM) (EXCEPTO PARA USA Y CANADA)	PLAQUE COMMANDES GENERALES (POUR PM) (SAUF POUR USA ET CANADA)
40	633131	START-STOP PLATE (FOR SM) (FOR USA AND CANADA ONLY)	PLACA MARCHA-PARO (PARA SM) (SOLO PARA USA Y CANADA)	PLAQUE MARCHE-ARRET (POUR SM) (SEULEMENT POUR USA ET CANADA)
	633073	START-STOP PLATE (FOR SM) (EXCEPT FOR USA AND CANADA)	PLACA MARCHA PARO (PARA SM) (EXCEPTO PARA USA Y CANADA)	PLAQUE MARCHE-ARRET (POUR SM) (SAUF POUR USA ET CANADA)

info@zipnasklade.ru
8(800)500-69-51

Nº	REF	DENOMINATION	DENOMINACIÓN	DENOMINATION
		FROM MACHINE Nr: 1.032.328	A PARTIR DE LA MAQUINA No : 1.032.328	A PARTIR DE LA MACHINE NR: 1.032.328
5	10057594	PM MICROPROCESSOR BOARD S3/4	PLACA MICROPROCESADOR PM S-3/4	CARTE MICROPROCESSEUR PM S3/4

info@zipnasklade.ru
8(800)500-69-51

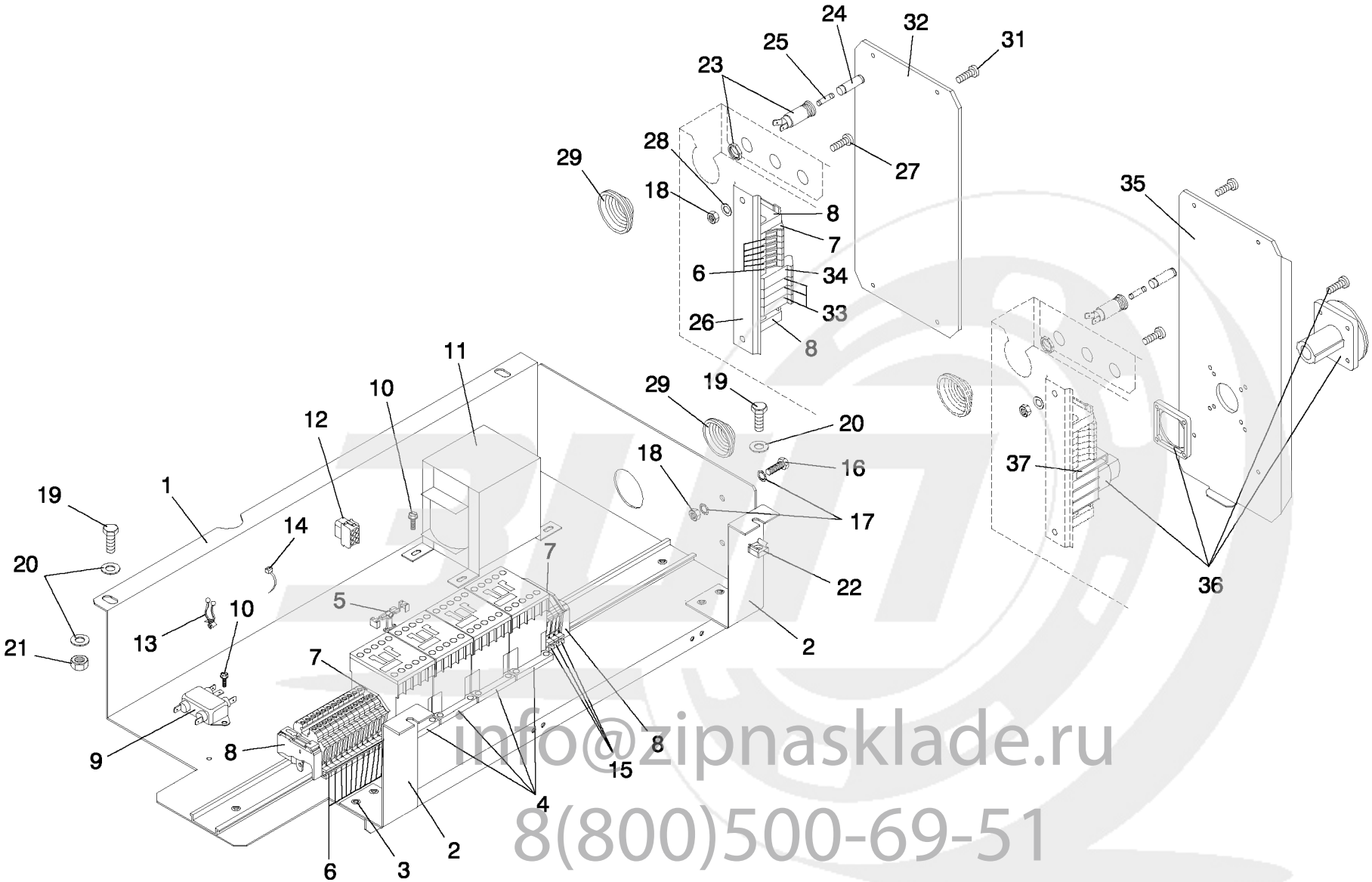

info@zipnasklade.ru
8(800)500-69-51

Nº	REF	DENOMINATION	DENOMINACIÓN	DENOMINATION
1	272344	INSTALLATION BOX PLATE	PLACA CAJA INSTALACION	PLAQUE BOITE INSTALLATION
2	276550	INSTALLATION BOX BRACKET	SOPORTE CAJA INSTALACION	SUPPORT BOITE INSTALLATION
3	151878	RIVET POP TLP/D/636/BS4,8X 9,1	REMA.POP TLP/D/636/BS 4,8X 9,1	RIVET TLP/D/636/BS 4,8X 9,1
4	193433	CONTACTOR 3TF31 01-OAN2	CONTACTOR 3TF31 01-OAN2 ZZ	CONTACTEUR 3TF31 01-OAN2
	194050	COIL 3TY7 403-OAN2	BOBINA 3TY7 403-OAN2 ZZ	BOBINE 3TY7 403-OAN2
5	196592	CONTACT BLOCK 3TX4 091-1A	BLOQUEO 3TX4 091-1A ZZ	BLOC CONTACT 3TX4 091-1A
6	312272	TERMINAL WDU 4 BEIGE	BORNE WDU 4 BEIGE	BORNE WDU 4 BEIGE
7	312264	END PLATE WAP 2,5-10	TAPA FINAL WAP 2,5-10	PLAQUE FERMETURE WAP 2,5-10
8	142331	FIXING CLAMP	TOPE FIJACION PARA RAILES *	BRIDE FIXATION
9	199836	FILTER FRI FA-1Z	FILTRO DE RED RFI TIPO FA-1Z	FILTRE RFI FA-1Z
10	183400	CYL.PLATE SCREW ST-4 20 C/AL	TOR.CHAPA ST-4 20 C/AL.T25	VIS PLAQUE CYL.ST-4 20 C/AL
11	300764	TRANSFORMER IP00 100 VA (FOR 208 AND 240V)	TRANSFORMADOR IP00 100 VA * (PARA 208 Y 240V)	TRANSFORMATEUR IP00 100 VA (POUR 208 ET 240V)
	300756	TRANSFORMER IP00 100 VA (FOR 220 AND 380V)	TRANSFORMADOR IP00 100 VA * (PARA 220 Y 380V)	TRANSFORMATEUR IP00 100 VA (POUR 220 ET 380V)
	300772	TRANSFORMER IP00 100 VA (FOR 200,240 AND 415V) (EXCEPT FOR USA AND CANADA)	TRANSFORMADOR IP00 100 VA * (PARA 200,240 Y 415V) (EXCEPTO PARA USA Y CANADA)	TRANSFORMATEUR IP00 100 VA (POUR 200,240 ET 415V) (SAUF POUR USA ET CANADA)
	306860	TRANSFORMER IP00 160 VA (FOR 440-480V)	TRANSFORMADOR IP00 160 VA * (PARA 440-480V)	TRANSFORMATEUR IP00 160 VA (POUR 440-480V)
12	139444	PROTECTOR 1/480705-0	PROTECTOR 1/480705-0	PROTECTEUR 1/480705-0
13	199893	CLAMP STL-450-3-01	ABRAZADERA STL-3N-450	BRIDE STL-450-3-01
14	140434	CLAMP 2221	BRIDA UNEX 2221 *	BRIDE 2221
15	601773	TERMINAL WDU10 BEIGE	BORNE WDU10 BEIGE	BORNE WDU10 BEIGE
16	146290	BICR.HEX SCREW DIN933-8 M-5X20	TOR.EX.DIN933-8.8 B.TRI.M 5X20	VIS HEX BICR.DIN933-8.8 M-5X20
17	149724	BICR EXT.TOOT.WASH.DIN6798 M5	ARAN.DEN.EXT.B.TRI.DIN6798M 5	RONDEL DEN.EX.BICR.DIN6798 M5
18	150177	BICR HEX NUT DIN934-8 M5	TUER.EX.DIN934-8 B.TRI.M 5	ECROU HEX DIN934-8 BIC.M5
19	146233	BICR.HEX SCREW DIN933-8 M6X15	TOR.EX.DIN933-8.8 B.TRI.M 6X15	VIS HEX DIN933-8.8 BICR.M6X15
20	149526	BICR.WASHER B DIN125-ST 6,4	ARAN.B DIN125-ST B.TRI. 6,4	RONDELLE B DIN125-ST BICR.6,4
21	150227	BICR HEX NUT DIN934-8 M6	TUER.EX.DIN934-8 B.TRI.M 6	ECROU HEX DIN934-8 BICR.M6
22	165019	CAGED NUT M-6 0,5-1,5 R.310007-9	TUER.ENJ.M6 0,5-1,5 R.310007-9	*ECROU PRESIONER M-6 0,5-1,5 R.310007-9

info@zipnasklade.ru
8(800)500-69-51

Nº	REF	DENOMINATION	DENOMINACIÓN	DENOMINATION
23	160119	FUSE HOLDER REF.FEC 031 1631	PORTAFUSIBLES REF.FEC.031.1631	PORTE-FUSIBLE REF.FEC 031 1631
24	137661	BAYONET HEAD (FOR FUSE 6X32)	CABEZA BAYONETA FEK.031.1613 (PARA CARTUCHO 6X32)	TETE BAYONETTE (POUR CARTOUCHE 6X32)
	192286	BAYONET HEAD (FOR FUSE 5X20)	CABEZA BAYONETA FEK.031.1611 (PARA CARTUCHO 5X20)	TETE BAYONETTE (POUR CARTOUCHE 5X20)
25	182485	FUSE FST 0034.5225 1A (FOR FUSE 6X32)	CART.FUSIB.FST 0034.5225 1 A* (PARA CARTUCHO 6X32)	CARTOUCHE FUS.FST 0034.5225 1A (POUR CARTOUCHE 6X32)
	302612	FUSE FST 0034.3117 1A (FOR FUSE 5X20)	CART.FUSIB.FST 0034.3117 1A (PARA CARTUCHO 5X20)	CART.FUSIBLE FST 0034.3117 1A (POUR CARTOUCHE 5X20)
26	245571	CONTACTOR FIXING PROFILE	PERFIL FIJACION CONTACTORES	PROFILE FIXATION CONTACTEURS
27	146175	BICR CYL SCREW DIN84-4 M-5X10	TOR.CIL.DIN84-4.8 B.TRI.M 5X10	VIS CYL BICR DIN84-4.8.M-5X10
28	149534	BICR.WASHER B DIN125-ST 5,3	ARAN.B DIN125-ST BICR. 5,3	RONDELLE B BICR.DIN125-ST 5,3
29	139683	CONE ECPC-6	CONO HIMEL ECPC-6	CONE ECPC-6
31	328229	SCREW ALO.T25 AR.18ESTR M 4X10	TOR.ALOM.T25 AR.18ESTR.M 4X10*	VIS ALOM.T25 AR.18ESTR.M 4X10
32	279836	CURRENT INPUT COVER (WITHOUT SWITCH DISCONNECTOR)	TAPA ENTRADA CORRIENTE (SIN INTERRUPTOR SECCIONADOR)	COUVERCLE ENTRÉE DE COURANT (SANS INTERRUPTEUR SECTIONNER)
33	601773	TERMINAL WDU10 BEIGE (WITHOUT SWITCH DISCONNECTOR) (WITHOUT ELECTRIC HEATING)	BORNE WDU10 BEIGE (SIN INTERRUPTOR SECCIONADOR) (SIN CALEFACCION ELECTRICA)	BORNE WDU10 BEIGE (SANS INTERRUPTEUR SECTIONNER) (SANS CHAUFAGE ELECTRIQUE)
34	601781	TERMINAL WPE10 101030 (WITHOUT SWITCH DISCONNECTOR) (WITHOUT ELECTRIC HEATING)	BORNE TIERRA WPE10 101030 (SIN INTERRUPTOR SECCIONADOR) (SIN CALEFACCION ELECTRICA)	BORNE DE TERRE WPE10 101030 (SANS INTERRUPTEUR SECTIONNER) (SANS CHAUFAGE ELECTRIQUE)
35	277582	CURRENT INPUT COVER (WITH SWITCH DISCONNECTOR)	TAPA ENTRADA CORRIENTE (CON INTERRUPTOR SECCIONADOR)	COUVERCLE ENTRÉE DE COURANT (AVEC INTERRUPTEUR SECTIONNER)
36	300376	POWER SWITCH P1-32/V/SVB (WITH SWITCH DISCONNECTOR) (WITHOUT ELECTRIC HEATING)	INTERRUPT.GENERAL P1-32/V/SVB (CON INTERRUPTOR SECCIONADOR) (SIN CALEFACCION ELECTRICA)	INTERRUP.GRAL.P1-32/V/SVB (AVEC INTERRUPTEUR SECTIONNER) (SANS CHAUFAGE ELECTRIQUE)
37	300400	AUX.CONTACT. HI11.P1/P3Z (WITH SWITCH DISCONNECTOR)	CONTACTO AUXILIAR HI11-P1/P3Z (CON INTERRUPTOR SECCIONADOR)	CONTACT.AUX.HI11-P1/P3Z (AVEC INTERRUPTEUR SECTIONNER)

info@zipnasklade.ru
8(800)500-69-51

Nº	REF	DENOMINATION	DENOMINACIÓN	DENOMINATION
		FROM MACHINE Nr:	A PARTIR DE LA MAQUINA No :	A PARTIR DE LA MACHINE NR:
		1.031.122	1.031.122	1.031.122
4	326231	CONTACTOR 3RT10 17-1AP02	CONTACTOR 3RT10 17-1AP02	CONTACTEUR 3RT10 17-1AP02
	194050	CANCELLED	ANULADO	ANNULE
5	327841	CONTACT BLOCK 3RA19 12-2H	BLOQUEO 3RA19 12-2H	BLOC CONTCAT 3RA19 12-2H

info@zipnasklade.ru
8(800)500-69-51

info@zipnasklade.ru
8(800)500-69-51

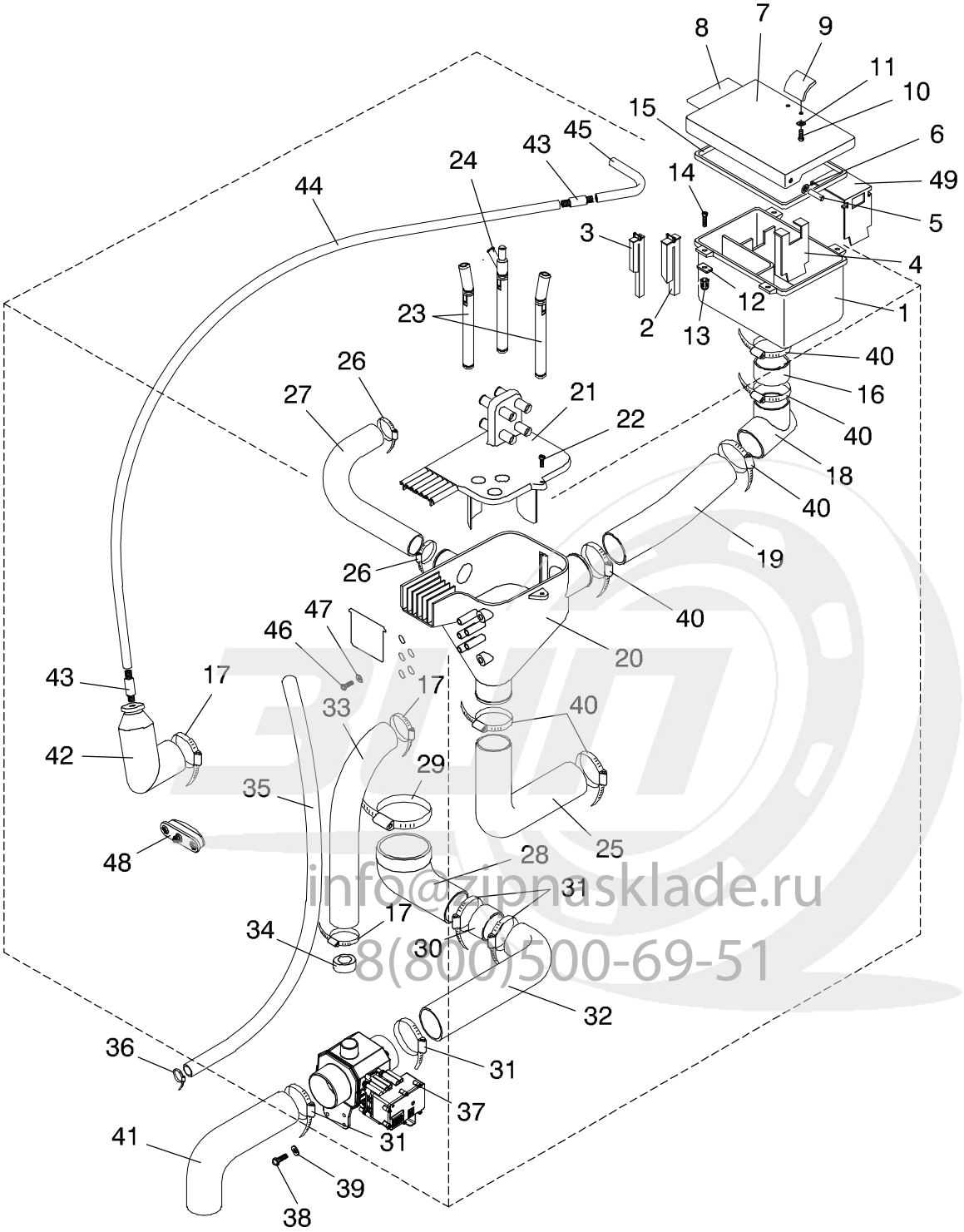

info@zipnasklade.ru
8(800)500-69-51

Nº	REF		DENOMINATION	DENOMINACIÓN	DENOMINATION
1	153502	*	DISPENSER BOX	CAJA DOSIFICADORES	BOITARD BAC A PRODUITS
2	155077		CHLORINE INTAKE HOSE	TUBO ASPIRACION CLORO	TUBE ASPIRATION CHLORE
3	155085		SOFTENER INTAKE HOSE	TUBO ASPIRACION SUAVIZANTE	TUBE ASPIRATION ADOUCISSANT
4	116814		SOLID DETERGENT SEPARATOR (FOR PM) (FOR SM)	SEPARADOR DETERGENTE SOLIDO (PARA PM) (PARA SM)	SEPARATEUR DETERGENT SOLIDE (POUR PM) (POUR SM)
5	116822		DISPENSER LID BRACKET	SOPORTE TAPA DOSIFICADORES	SUPPORT COUVERCLE BAC A PROD.
6	246306		SOAP DISPENSER COVER WASHER	ARANDELA 10X3.2X1 INOX	RONDELLE COUVERCLE BAC PRODUIT
7	116798		DISPENSER LID	TAPA DOSIFICADORES	COUVERCLE BAC A PRODUITS
8	300327		SOAP DISPENSER LID PLATE	PLACA TAPA DOSIFICADORES	PLAQUE COUVERCLE BAC A PRODUIT
9	116806		DISPENSER LID KNOB	TIRADOR TAPA DOSIFICADORES	POIGNEE COUVERCLE BAC A PROD.
10	144832		INOX.HEX.SCREW DIN 933 M-4X10	TOR.EX.DIN933INOX A2-70 M 4X10	VIS HEX INOX. DIN 933 M-4X10
11	149328		INOX A2 WASHER DIN 125 4,3	ARAN. DIN125 INOX A2 4,3	RONDELLE INOX A2 DIN 125 4,3
12	281006		REINFORT WASHER	ARANDELA REFUERZO	RONDELLE RENFORT
13	183541		CYLIN. NUT M5 R-310077-3	TUER.ENJ.M5 CILINDR.R-310077-3	ECROU M5 CYLIN. R-310077-3
14	144741		INOX SCREW DIN 963 M-5X16 A270	TOR.AV.DIN963 INOX A2-70 M5X16	VIS INOX. DIN 963 M-5X16 A2-70
15	110114		PROFILE EXTRA 5463GREY 6X9X4 (1 COIL)	BURL.AISLAN.TESA 5463-22 6X9X4 (1 ROLLO)	PROFILE EXTRA 5463GRIS 6X9X4 (1 ROULEAU)
16	253252		DISPENSER OUTLET HOSE	TUBO SALIDA DOSIFICADOR	TUBE SORTIE BAC A PRODUITS
17	132290		CLAMP 301730-8 D50-70	ABRAZADERA 301730-8 D50- 70	BRIDE 301730-8 D50-70
18	141200		DISPENSER SUPPLEMENT	SUPLEMENTO DOSIFICADOR	SUPPLEMENT BAC A PRODUITS
19	199901		COLLECTOR SOAP DISPENSER HOSE	TUBO DOSIFICADOR COLECTOR	TUBE BAC A PRODUITS COLLECTEUR
20	300061		DISTRIBUTOR BODY	CUERPO DISTRIBUIDOR	CORPS DISTRIBUTEUR
21	300186		DISTRIBUTOR COVER	TAPA DISTRIBUIDOR	COUVERCLE DISTRIBUTEUR
22	149153		PLATE SCREW ST-4 80 C/AL.T25	TOR.CHAPA ST-4 80 C/AL.T25 *	VIS PLAQUE ST-4 80 C/AL.T25
23	199877		WATER INLET RACCORD	RACOR ENTRADA AGUA	RACCORD ENTREE EAU
24	199885		WATER INLET RACCORD	RACOR ENTRADA AGUA	RACCORD ENTREE EAU
25	199067		RUBBER ELBOW D60X450X380	CODO GOMA D60X450X380	COUDE GOMME D60X450X380
26	132282		CLAMP 32-50	ABRAZADERA 32- 50	BRIDE 32-50
27	199414		RUBBER ELBOW D30X350X140	CODO GOMA D30X350X140	COUDE GOMME D30X350X140

info@zipnasklade.ru
8(800)500-69-51

Nº	REF		DENOMINATION	DENOMINACIÓN	DENOMINATION
28	253492		DRAIN HOSE	TUBO DESAGÜE	TUBE VIDANGE
29	155143		CLAMP 110-130	ABRAZADERA 110-130 *	BRIDE 110-130
30	194217		OBTURATOR HOSE	TUBO OBTURADOR	TUBE OBTURATEUR
31	132340		CLAMP REF.30173380-2 D80-100	ABRAZADERA REF.30173380-2 D80-100	BRIDE REF.30173380-2 D80-100
32	250647		DRAIN HOSE	TUBO DESAGÜE	TUBE VIDANGE
33	199059		RUBBER ELBOW D50X700X140	CODO GOMA D50X700X140	COUDE GOMME D50X700X140
34	301853		OVERFLOW HOSE SUPPLEMENT	SUPLEMENTO TUBO REBOSADERO	SUPPLEMENT TUBE DEVERSOIR
35	278259		BEARING BOX DRAIN HOSE	TUBO DESAGUE CAJA COJINETES	TUBE VIDANGE BOITE ROULEMENTS
36	156109		CLAMP 16-27	ABRAZADERA 16- 27 *	BRIDE 16-27
37	600551		DRAIN G3-O-180	DESAGÜE G3-O-180	VIDANGE G3-O-180
38	146233		BICR.HEX SCREW DIN933-8 M6X15	TOR.EX.DIN933-8.8 B.TRI.M 6X15	VIS HEX DIN933-8.8 BICR.M6X15
39	149526		BICR.WASHER B DIN125-ST 6,4	ARAN.B DIN125-ST B.TRI. 6,4	RONDELLE B DIN125-ST BICR.6,4
40	132324		CLAMP 301509-7 D60-80	ABRAZADERA 60- 80 *	BRIDE 301509-7 D60-80
41	163253		DRAIN OUTLET HOSE	TUBO SALIDA DESAGÜE	TUBE SORTIE VIDANGE
42	120964		PRESSURE SWITCH INTAKE BODY	CUERPO TOMA PRESOSTATO	CORPS PRISE PRESSOSTAT
43	120956		LEVEL PRESSURE-SWITCH INTAKE	TOMA PRESOSTATO NIVEL	PRISE PRESSOSTAT NIVEAU
44	244897	&	PRESSOSTAT HOSE	TUBO PRESOSTATOS	TUBE PRESSOSTATS
45	279588		AIR CONDUCTION HOSE	TUBO CONDUCCION AIRE	TUBE CONDUITE AIR
46	146274		BICR.HEX SCREW DIN933-8 M-5X10	TOR.EX.DIN933-8.8 B.TRI.M 5X10	VIS HEX.BICR.DIN933-8.8 M-5X10
47	149534		BICR.WASHER B DIN125-ST 5,3	ARAN.B DIN125-ST BICR. 5,3	RONDELLE B BICR.DIN125-ST 5,3
48	121962		HEATER INLET LID	CIERRE ENTRADA CALEFACTOR *	FERMETURE ENTREE RESISTANCE
49	293647		SOLID DETERGENT SEPARATOR (FOR CM)	SEPARADOR DETERGENTE SOLIDO (PARA CM)	SEPARATEUR DETERGENT SOLIDE (POUR CM)
*	281097		COMPLETE DISPENSER(W.LID&ACC.)	CONJUNTO DOSIFIC(CON TAPA/AC.)	BAC À PRODUITS(AVEC COUV/ACC.)
&	128199		1 METER RUBBER HOSE D 9X 5	1 METRO TUBO GOMA D 9X 5	1 METRE TUBE GOMME D 9X 5

info@zipnasklade.ru
8(800)500-69-51

info@zipnasklade.ru
8(800)500-69-51

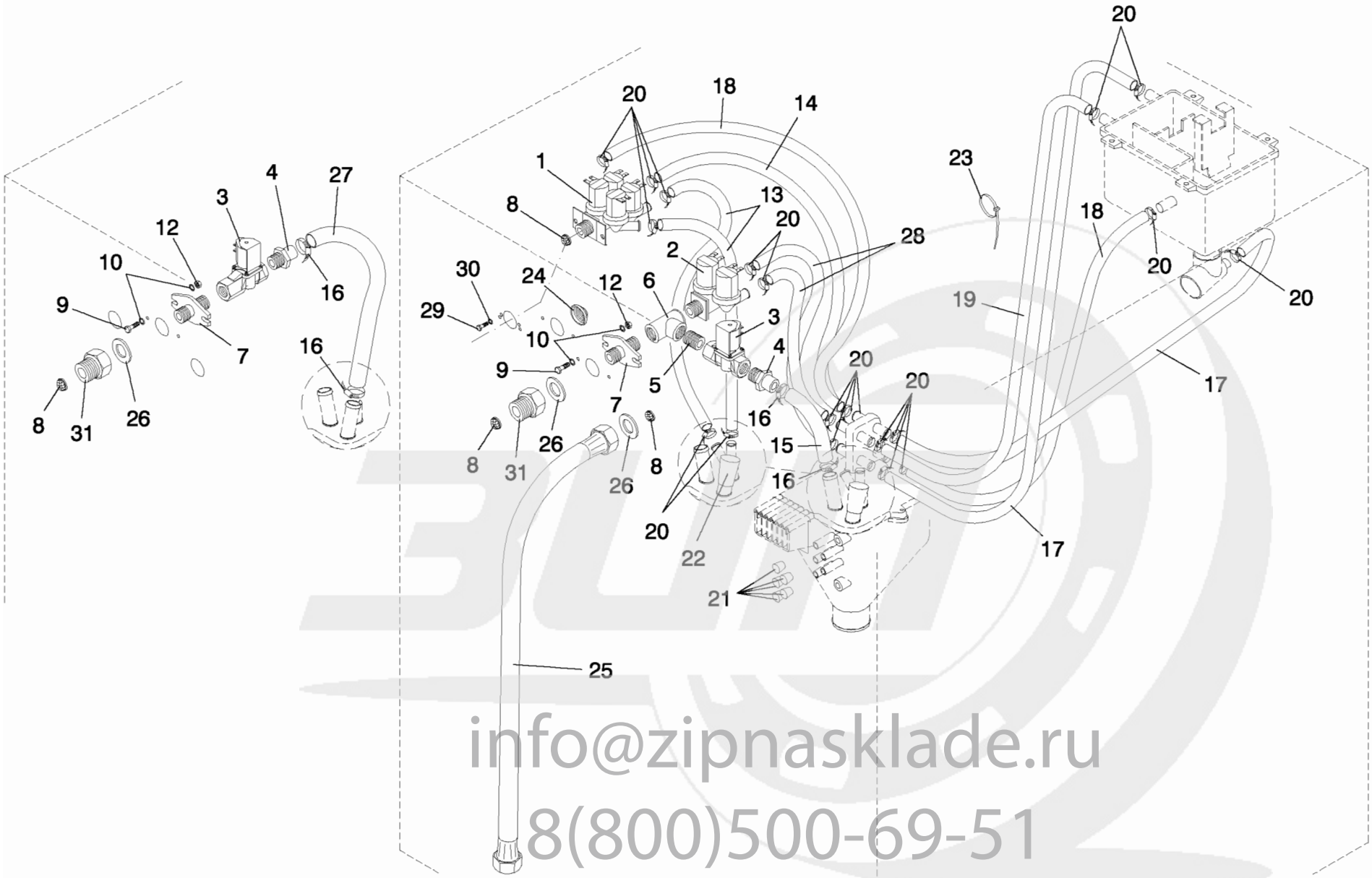

info@zipnasklade.ru
8(800)500-69-51

Nº	REF		DENOMINATION	DENOMINACIÓN	DENOMINATION
1	129411		180 DEG. ELECTROVALVE 389A	ELECTROV.CUADRUPLE 389-A 180º*	ELECTROVANNE 180 DEG.389A
	192054		ELECT.SERIES 300 COIL 220/240V	BOBINA ELEC.SERIE 300 220/240V	BOBINE ELEC.SERIE 300 220/240V
	300194		YELLOW CASE 30053	ESTUCHE AMARILLO 30053	BOITE JAUNE 30053
	300202		INTEGRAL GUIDE-MEMBRANE 30696	MEMBRANA-GUIA INTEGRAL 30696 *	MEMBRANE-GUIDE INTEGRALE 30696
2	256503		TWO TRACK ELECTROVALVE	ELECTROVALVULA DOS VIAS	ELECTROVANNE DEUX VOIES
	192054		ELECT.SERIES 300 COIL 220/240V	BOBINA ELEC.SERIE 300 220/240V	BOBINE ELEC.SERIE 300 220/240V
	300194		YELLOW CASE 30053	ESTUCHE AMARILLO 30053	BOITE JAUNE 30053
	300202		INTEGRAL GUIDE-MEMBRANE 30696	MEMBRANA-GUIA INTEGRAL 30696 *	MEMBRANE-GUIDE INTEGRALE 30696
3	353136		VALVE BODY EV220A G34 042U4031	CUERPO VAL.EV220A G34 042U4031	CORPS VANNE EV220AG34 042U4031
	353144		COIL AB 4.5W230VAC 042NO800	BOBINA AB 4.5W230VAC 042NO800	BOBINE AB 4.5W230VAC 042NO800
	503417		SPARE PARTS KIT EV220A 042U1006	KIT REPUES. EV220A 042U1006	KIT RECHANGES EV220A 042U1006
4	160259		WATER INLET NUT	TUERCA ENTRADA AGUA	ECROU ENTREE EAU
5	130005		INNER SLEEVE FIG.531 3/4" GALV	FIGURA 531 DE 3/4" GALV.	MANCHON INTERIEUR FIG.531 3/4"
6	129569		T. FIG. 130 3/4" GALV.	FIGURA 130 DE 3/4" GALV.	T. FIG. 130 3/4" GALV.
7	116830		ELECTROVALVE BRACKET	SOPORTE ELECTROVALVULA	SUPPORT ELECTROVANNE
8	159996		ELECTROVALVE FILTER	FILTRO ELECTROVALVULA ELBI	FILTRE ELECTROVANNE
9	146233		BICR.HEX SCREW DIN933-8 M6X15	TOR.EX.DIN933-8.8 B.TRI.M 6X15	VIS HEX DIN933-8.8 BICR.M6X15
10	149526		BICR.WASHER B DIN125-ST 6,4	ARAN.B DIN125-ST B.TRI. 6,4	RONDELLE B DIN125-ST BICR.6,4
12	150227		BICR HEX NUT DIN934-8 M6	TUER.EX.DIN934-8 B.TRI.M 6	ECROU HEX DIN934-8 BICR.M6
13	214403	&	WATER INLET HOSE	TUBO ENTRADA AGUA	TUBE ENTREE EAU
14	115816	&	WATER INLET HOSE	TUBO ENTRADA AGUA	TUBE ENTREE EAU
15	278515	@	WATER INLET HOSE	TUBO ENTRADA AGUA	TUBE ENTREE EAU
16	156109		CLAMP 16-27	ABRAZADERA 16- 27 *	BRIDE 16-27
17	214106	&	WATER INLET HOSE	TUBO ENTRADA AGUA	TUBE ENTREE EAU
18	535054	&	WATER INLET HOSE	TUBO ENTRADA AGUA	TUBE ENTREE EAU
19	535062	&	WATER INLET HOSE	TUBO ENTRADA AGUA	TUBE ENTREE EAU
20	155150		CLAMP 8-16	ABRAZADERA 15-17	BRIDE 8-16
21	156679		CONICAL END-PIECE R-16 D10	TOPE CONICO REPRIMSA R-16 D10	BOUCHON CONIQUE R-16 D10

info@zipnasklade.ru
8(800)500-69-51

Nº	REF		DENOMINATION	DENOMINACIÓN	DENOMINATION
22	156687		CONICAL END-PIECE R-16 D16	TOPE CONICO REPRIMSA R-16 D16	ARRET CONIQUE R-16 D16
23	140533		CLAMP 2271-0	BRIDA UNEX 2271-0 *	BRIDE 2271-0
24	181701		LEGRAND CONE 91911	CONO LEGRAND 91911	CONE LEGRAND 91911
25	164137		WATER INLET HOSE RACORDS 3/4" (EXCEPT FOR USA AND CANADA)	TUBO EPDM 3/4"X1500 C.RACORES* (EXCEPTO PARA USA Y CANADA)	TUBE ENTREE EAU RACCORDS 3/4" (SAUF POUR USA ET CANADA)
26	114348		GASKET D24XD13,5X2	JUNTA MIFLEX D24X13, 5X2 EPDM WRC 400105	JOINT D24XD13,5X2
27	156125	@	WATER INLET HOSE	TUBO ENTRADA AGUA	TUBE ENTREE EAU
28	259457	&	WATER INLET HOSE	TUBO ENTRADA AGUA	TUBE ENTREE EAU
29	146258		BIC.HEX SCREW DIN933-4.8 M4X10	TOR.EX.DIN933-4.8 B.TRI.M 4X10	VIS HEX DIN933-4.8 BICR.M 4X10
30	149476		BICR.WASHER B DIN125-ST 4,3	ARAN.B DIN125-ST B.TRI. 4,3	RONDELLE B DIN125-ST BICR.4,3
			(CANCELLED)	(ANULADO)	(ANNULE)
			WITHOUT ILLUSTRATION	SIN ILUSTRACION	SANS ILLUSTRATION
	797027		THIRD WATER INLET KIT	KIT TERCERA ENTRADA AGUA	KIT TROISIEME ENTREE EAU
			(FOR PM)	(PARA PM)	(POUR PM)
			(FOR USA AND CANADA ONLY)	(SOLO PARA USA Y CANADA)	(SEULEMENT POUR USA ET CANADA)
	798058		THIRD WATER INLET KIT	KIT TERCERA ENTRADA AGUA	KIT TROISIEME ENTREE EAU
			(FOR PM)	(PARA PM)	(POUR PM)
			(EXCEPT FOR USA AND CANADA)	(EXCEPTO PARA USA Y CANADA)	(SAUF POUR USA ET CANADA)

info@zipnasklade.ru
8(800)500-69-51

&	323469	1 METER HOSE PARIGI D10XD16	1 METRO TUBO PARIGI D10XD16	1 METRE TUBE PARIGI D10XD16
@	156638	1 METER HOSE EPDM D15X23	1 METRO TUBO EPDM D15X23	1 METRE TUBE EPDM D15X23

Nº	REF	DENOMINATION	DENOMINACIÓN	DENOMINATION
		FROM MACHINE Nr:	A PARTIR DE LA MAQUINA No :	A PARTIR DE LA MACHINE NR:
		1.030.185	1.030.185	1.030.185
8	315614	CONICAL FILTER REF.4008-2-1	FILTRO CONICO REF.4008-2-1	FILTRE CONIQUE REF.4008-2-1
31	315309	FILTER BODY (FOR USA AND CANADA ONLY)	CUERPO FILTRO (SOLO PARA USA Y CANADA)	CORPS FILTRE (SEULEMENT POUR USA ET CANADA)
	315317	FILTER BODY (EXCEPT FOR USA AND CANADA)	CUERPO FILTRO (EXCEPTO PARA USA Y CANADA)	CORPS FILTRE (SAUF POUR USA ET CANADA)

info@zipnasklade.ru
8(800)500-69-51

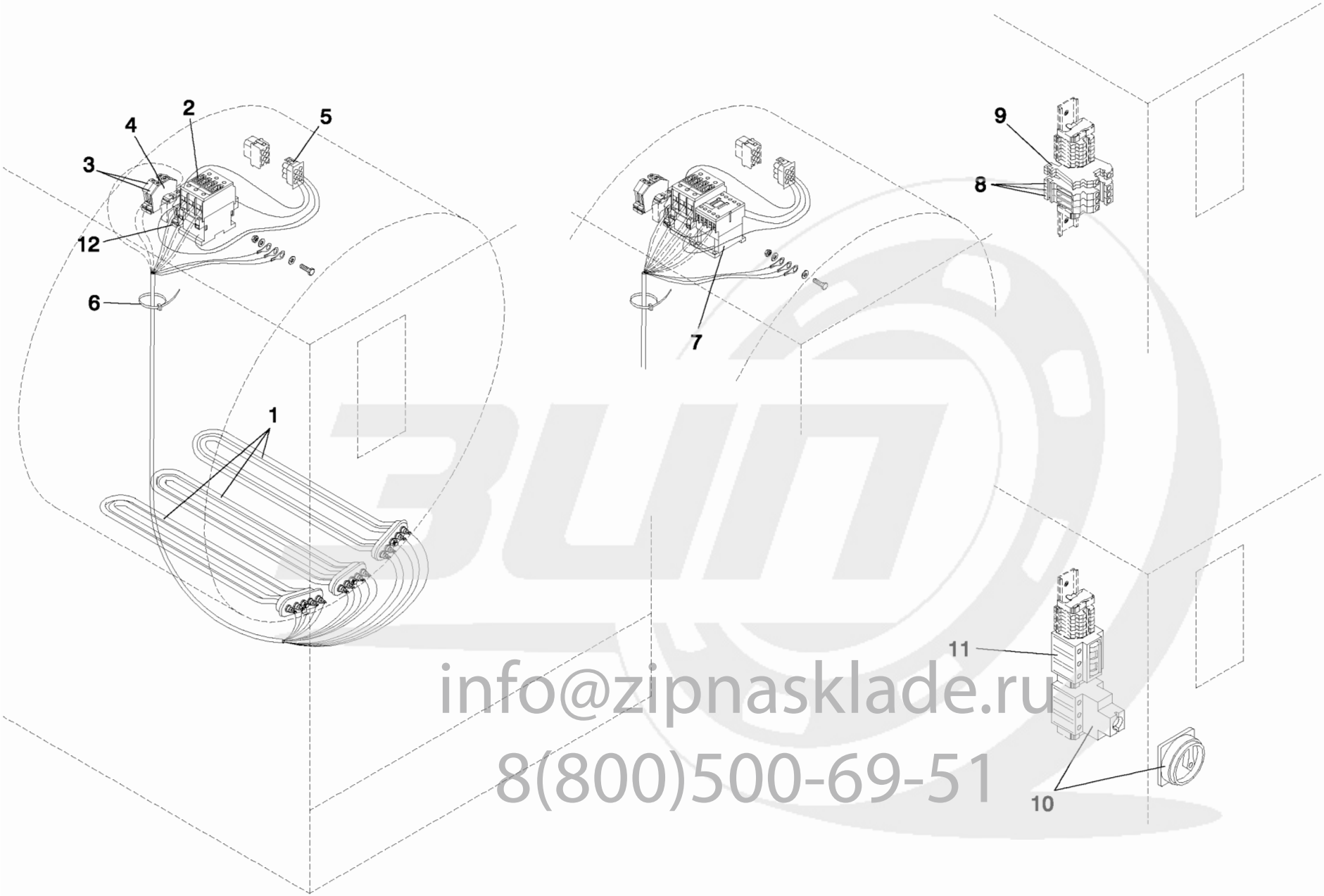

info@zipnasklade.ru
8(800)500-69-51

Nº	REF	DENOMINATION	DENOMINACIÓN	DENOMINATION
		ELECTRIC HEATING KITS (WITHOUT SWITCH DISCONNECTOR)	KITS CALEFACCION ELECTRICA (SIN INTERRUPTOR SECCIONADOR) .	KITS CHAUFFAGE ELECTRIQUE (SANS INTERRUPTEUR SECTIONNER)
	797399	KIT E.H.FOR 200-208-220V	KIT CAL.ELEC.200-208-220V.	KIT CH.E.POUR 200-208-220V
	797407	KIT E.H.FOR 240V	KIT CAL.ELEC.240V.	KIT CH.E.POUR 240V
	797415	KIT E.H.FOR 380V	KIT CAL.ELEC.380V.	KIT CH.E.POUR 380V
	797423	KIT E.H. FOR 415-440V	KIT CAL.ELEC.415-440V. .	KIT CH.E.POUR 415-440V
		ELECTRIC HEATING KITS (WITH SWITCH DISCONNECTOR)	KITS CALEFACCION ELECTRICA (CON INTERRUPTOR SECCIONADOR) .	KITS CHAUFFAGE ELECTRIQUE (AVEC INTERRUPTEUR SECTIONNER)
	797316	KIT E.H.FOR 200-208-220V	KIT CAL.ELEC.200-208-220V	KIT CH.E.POUR 200-208-220V
	797324	KIT E.H.FOR 240V	KIT CAL.ELEC.240V	KIT CH.E.POUR 240V
	797332	KIT E.H.FOR 380V	KIT CAL.ELEC.380V	KIT CH.E.POUR 380V
	797340	KIT E.H.FOR 415-440V	KIT CAL.ELEC.415-440V. .	KIT CH.E.POUR 415-440V
1	302695	HEATER 230V 7000W (FOR 200,208,220 AND 380V)	CALEFACTOR 230V 7000W (PARA 200,208,220 Y 380V)	RESISTANCE 230V 7000W (POUR 200,208,220 ET 380V)
	302703	HEATER 240V 7000W (FOR 240-415-440V)	CALEFACTOR 240V 7000W (PARA 240-415-440V)	RESISTANCE 240V 7000W (POUR 240-415-440V)
2	300251	CONTACTOR 3TF34 11-OAN2	CONTACTOR 3TF34 11-OAN2	CONTACTEUR 3TF34 11-OAN2
	302810	COIL 37Y7 443-OAN2	BOBINA 3TY7 443-OAN2 ZZ	BOBINE 3TY7 443-OAN2
3	312314	TERMINAL WDU16 BEIGE 102040	BORNE WDU16 BEIGE 102040	BORNE WDU16 BEIGE 102040
4	312330	BORNE COVER WAP16-35 105010	TAPA BORNE WAP16-35 105010	COUVERCLE BORNE WAP16-35 105010
5	139394	PROTECTOR 1/480704-0	PROTECTOR 1/480704-0	PROTECTEUR 1/480704-0
6	140525	CLAMP 2244-0	BRIDA UNEX 2244-0 *	BRIDE 2244-0
7	193433	CONTACTOR 3TF31 01-OAN2 (FOR 200,208,220 AND 240V)	CONTACTOR 3TF31 01-OAN2 ZZ (PARA 200,208,220 Y 240V)	CONTACTEUR 3TF31 01-OAN2 (POUR 200,208,220 ET 240V)
	194050	COIL 3TY7 403-OAN2	BOBINA 3TY7 403-OAN2 ZZ	BOBINE 3TY7 403-OAN2
8	313650	TERMINAL WDU35 BEIGE 102050 (WITHOUT SWITCH DISCONNECTOR)	BORNE WDU35 BEIGE 102050 (SIN INTERRUPTOR SECCIONADOR)	BORNE WDU35 BEIGE 102050 (SANS INTERRUPTEUR SECTIONNER)
9	312355	EARTH TERMINAL WPE35 101050 (WITHOUT SWITCH DISCONNECTOR)	BORNE TIERRA WPE35 101050 (SIN INTERRUPTOR SECCIONADOR)	BORNE DE TERRE WPE35 101050 (SANS INTERRUPTEUR SECTIONNER)
10	300392	PAQUET.SWITCH P3-100/V/SVB (WITH SWITCH DISCONNECTOR)	INTERRUPT.GENERAL P3-100/V/SVB* (CON INTERRUPTOR SECCIONADOR)	INTERRUP.PAQUET P3-100/V/SVB (AVEC INTERRUPTEUR SECTIONNER)

info@zipnasklade.ru
8(800)500-69-51

Nº	REF	DENOMINATION	DENOMINACIÓN	DENOMINATION
11	279273	MOTOR PROTECTION SWITCH (WITH SWITCH DISCONNECTOR)	INTERRUPTOR PROTECCION MOTOR (CON INTERRUPTOR SECCIONADOR)	INTERRUPTEUR.PROTECTION MOTEUR (AVEC INTERRUPTEUR SECTIONNER)

info@zipnasklade.ru
8(800)500-69-51

Nº	REF	DENOMINATION	DENOMINACIÓN	DENOMINATION
		FROM MACHINE Nr:	A PARTIR DE LA MAQUINA No :	A PARTIR DE LA MACHINE NR:
		1.031.122	1.031.122	1.031.122
2	320853	CONTACTOR 3RT10 34-1AL2	CONTACTOR 3RT10 34-1AL2	CONTACTEUR 3RT10 34-1AL2
	321257	COIL 3RT1934-5AL21 230-50/60	BOBINA 3RT1934-5AL21 230-50/60	BOBINE 3RT1934-5AL21 230-50/60
7	326231	CONTACTOR 3RT10 17-1AP02	CONTACTOR 3RT10 17-1AP02	CONTACTEUR 3RT10 17-1AP02
	194050	CANCELLED	ANULADO	ANNULE
12	332254	AUX.CONTACT BLOCK3RH1921-1DA11	BLOQUE CONTAC.AUX3RH1921-1DA11	BLOC CONTACT AUX.3RH1921-1DA11

info@zipnasklade.ru
8(800)500-69-51

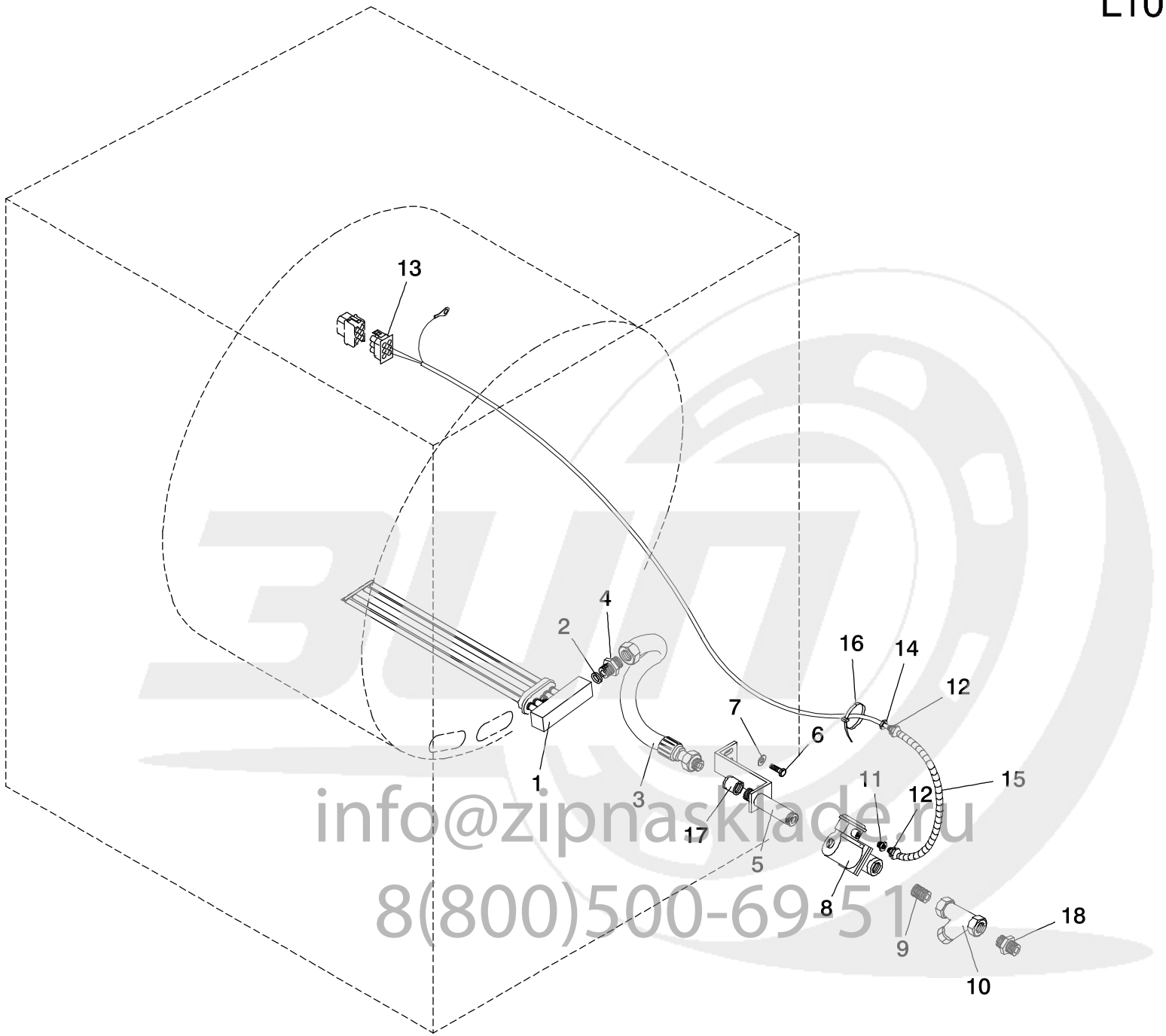

info@zipnasklade.ru
8(800)500-69-51

U.12203

Nº	REF	DENOMINATION	DENOMINACIÓN	DENOMINATION
		STEAM HEATING KITS	KITS CALEFACCION VAPOR	KITS CHAUFFAGE VAPEUR
	719997	STEAM KIT FOR 60HZ (FOR USA AND CANADA ONLY)	KIT CALEFACCION VAPOR 60HZ (SOLO PARA USA Y CANADA)	KIT VAPEUR POUR 60HZ (SEULEMENT POUR USA ET CANADA)
	717256	STEAM KIT FOR 60HZ (EXCEPT FOR USA AND CANADA)	KIT CALEFACCION VAPOR 60HZ (EXCEPTO PARA USA Y CANADA)	KIT VAPEUR POUR 60HZ (SAUF POUR USA ET CANADA)
	717249	STEAM KIT FOR 50HZ	KIT CALEFACCION VAPOR 50HZ	KIT VAPEUR POUR 50HZ
1	163345	STEAM DISTRIBUTOR	DISTRIBUIDOR VAPOR	DISTRIBUTEUR VAPEUR
2	109777	COPPER GASKET 1/2"	12504 JUNTA COBRE 1/2"	JOINT CUIVRE 1/2"
3	162305	STEAM INLET JOINTING	UNION ENTRADA VAPOR	UNION ENTREE VAPEUR
4	156216	JOINTING SCREW 10903 1/2"	10903 TORNILLO UNION MM1/2"	VIS UNION 10903 1/2"
5	163337	STEAM INLET	ENTRADA VAPOR	ENTREE VAPEUR
6	146233	BICR.HEX SCREW DIN933-8 M6X15	TOR.EX.DIN933-8.8 B.TRI.M 6X15	VIS HEX DIN933-8.8 BICR.M6X15
7	149526	BICR.WASHER B DIN125-ST 6,4	ARAN.B DIN125-ST B.TRI. 6,4	RONDELLE B DIN125-ST BICR.6,4
8	583369	STEAM VALVE BODY 1/2"	CUERPO VALV. VAPOR 1/2" *	CORPS VANNE VAPEUR 1/2"
	583385	STEAM VALVE COIL 208-240V 50/60Hz	BOBINA V.VAPOR 208-240V 50/60Hz *	BOBINE V. VAPEUR 208-240V 50/60Hz
9	129999	FIG. 531 1/2" GALV	FIGURA 531 DE 1/2" GALV.	FIG. 531 1/2" GALV
10	133728	STRAINER THREADED 1/2" O'3 PN16	FILTRO GG25 ROSC.1/2" PN16 0'3MM INOX	FILTRE FILETE 1/2" 0,3 PN16
11	140319	REDUCER PG 13'5-9	REDUCTOR 130904 PG 13'5-9	REDUCTEUR PG 13'5-9
12	140152	RACCORD PG- 9	RACOR PG- 9 REF.330904	RACCORD PG- 9
13	139394	PROTECTOR 1/480704-0	PROTECTOR 1/480704-0	PROTECTEUR 1/480704-0
14	140228	COUNTERNUT PG-9	TUERCA PG 280904 PG- 9	CONTREECROU PG-9
15	140707	HOSE HELIPLAST NO 9 REF.77009 (1 METER)	TUBO HELIPLAST NO. 9 REF.77009 (1 METRO)	TUBE HELIPLAST NO 9 REF.77009 (1 METRE)
16	140525	CLAMP 2244-0	BRIDA UNEX 2244-0 *	BRIDE 2244-0
17	129759	FIG 270 1/2" GALV	FIGURA 270 DE 1/2" GALV.	FIG 270 1/2" GALV
18	251355	STEAM INLET SLEEVE (FOR USA AND CANADA ONLY)	MANGUITO ENTRADA VAPOR (SOLO PARA USA Y CANADA)	MANCHON ENTREE VAPEUR (SEULEMENT POUR USA ET CANADA)

info@zipnasklade.ru
8(800)300-69-51