Mod.	From serial Nº. A partir máq. Nº.
HS-6085	2.490.001
EH190	2.490.001

Parts Handbook for Washers
Manual de Despiece para lavadoras
Notice Vues Eclatées pour laveuses
HS-6085 / EH190

GIRBAU, SA
Crta de Manlleu, km. 1
08500 VIC (Barcelona) • SPAIN
Tel.(+ 34) 938 861 100
Fax(+ 34) 938 860 785
girbau@girbau.es
www.girbau.com

USA y CANADÁ:
CONTINENTAL GIRBAU Inc.
2500 State Road 44
WI 54904 Oshkosh • USA
Tel. 1(920) 231-8222
Fax 1(920) 231-4666
info@cont-girbau.com
www.cont-girbau.com

info@zipnasklade.ru
8(800)500-69-51

Parts Handbook
Despiece
Vues Eclatées

HS-6085
EH190

Cod. 693598 Alt.01
Rev. 01/0218

NOTES TO USE PARTS LIST

Sheets no. 1,2,3,4,5,6,7,8,9 & 10:
Are common for all versions.

Sheet no. 11:
The top just refers to machines with third water inlet.

Sheet no. 12:
Relates to steam heated machines.

Sheet no. 13:
Relates to “TILT” system machines only.

Sheet no. 14:
Relates to machines equipped with second drain.

Sheet no. 15:
Relates to machines equipped with remote control.

ACLARACIONES PARA EL USO DEL DESPIECE

Hojas nº 1,2,3,4,5,6,7,8,9 y 10:
Son comunes a todas las variantes.

Hoja nº 11:
La parte superior es sólo para las máquinas con tercera entrada de agua.

Hoja nº 12:
Corresponde a las máquinas con calefacción a vapor.

Hoja nº 13:
Es sólo para las máquinas con sistema “VOLQUETE”.

Hoja nº 14:
Corresponde a las máquinas con segundo desagüe.

Hoja nº 15:
Corresponde a las máquinas con mando a distancia.

NOTES UTILISATION VUES ECLATEES

Feuilles no.1,2,3,4,5,6,7,8,9 et 10:
Sont communes à toutes les versions.

Feuille no. 11:
La partie supérieure est seulement pour les machines à troisième arrivée d’eau.

Feuille no. 12:
Correspond aux machines à chauffage à vapeur.

Feuille no. 13:
Est seulement pour machines avec système “BASCULANT”.

Feuille no. 14:
Correspond à machines avec deuxième vidange.

Feuille no. 15:
Correspond à machines avec télécommande.

info@zipnasklade.ru
8(800)500-69-51

VERY IMPORTANT:
Before ordering parts be sure they have not been modified. Check it on modification sheet, after the corresponding sheet.

MUY IMPORTANTE:
Al pedir una pieza cerciorarse antes de que la misma no ha sido modificada. Si lo hubiese sido, estaría situada como hoja de modificaciones, detrás de la hoja correspondiente.

TRES IMPORTANT:
Avant de commander une pièce, s’assurer qu’elle n’a pas été modifiée. Le vérifier sur feuille de modifications, derrière la feuille correspondante.

HS-6085 (1)

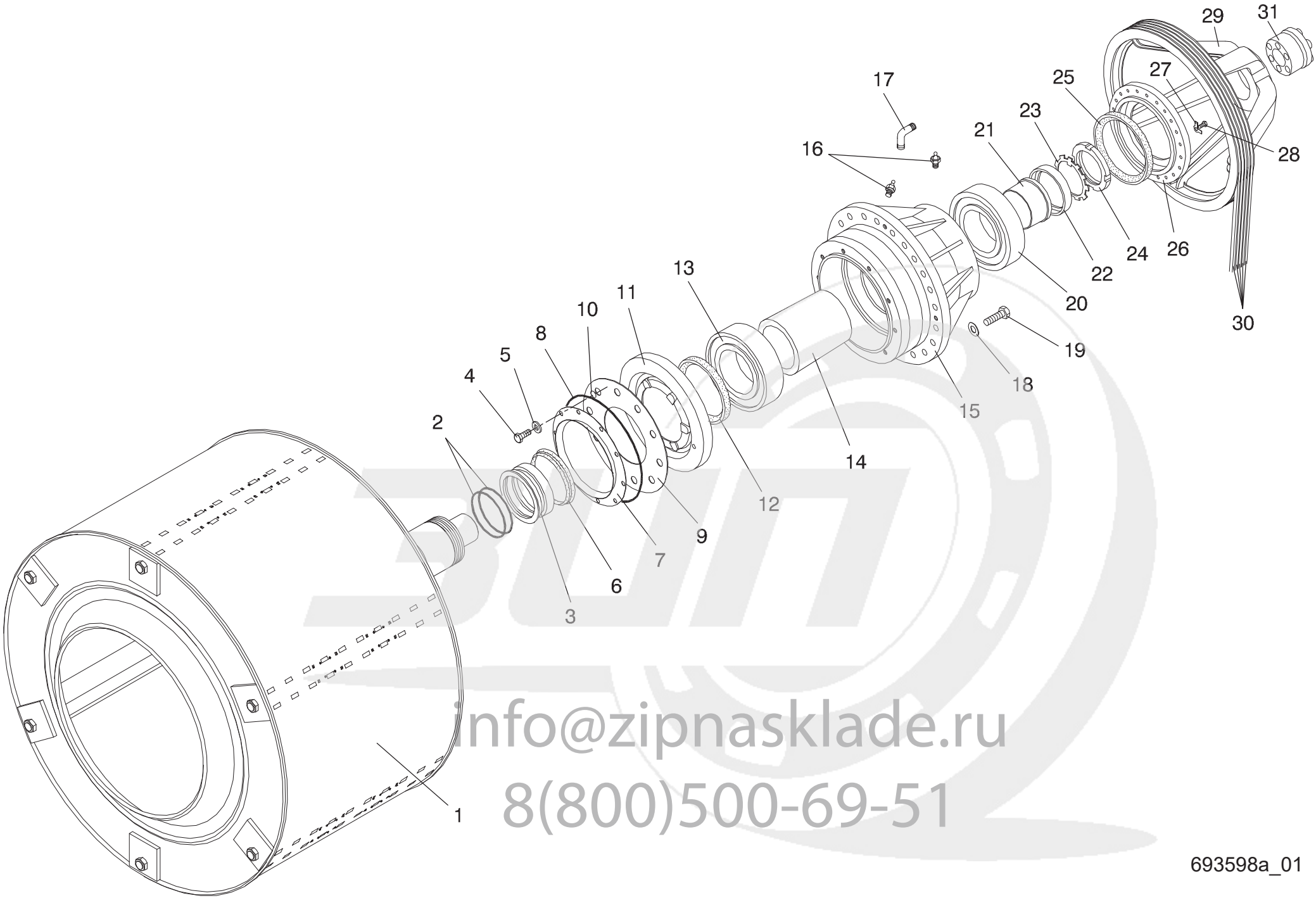

info@zipnasklade.ru
8(800)500-69-51

693598a_01

Nº	REF	DENOMINATION	DENOMINACIÓN	DENOMINATION
1	10288179	DRUM	TAMBOR	TAMBOUR
2	185579	TORIC GASKET 189X203,85X6,99	JUNTA TORICA189,90X203,88X6,99	JOINT TORIQUE 189X203,85X6,99
3	420869	SEAL RING	ANILLO RETENES	BAGUE RESERVES
4	185629	INOX HEX SCREW DIN933 M10X80	TOR.EX.DIN933INOX A2-70 M10X80	VIX HEX INOX DIN933 M10X80
5	254144	WASHER D35XD10.25X6	ARANDELA 35X10.25X6 INOX	RONDELLE D35XD10.25X6
6	317651	RING V-RING V-250 A VITON	ANILLO V-RING V-250 A VITON	BAGUE V-RING V-250 A VITON
7	255703	V-RING PROTECTION	PROTECCION V-RING	PROTECTION V-RING
8	185561	TORIC GASKET EPIDOR OR-420X10	JUNTA TORICA EPIDOR OR-420X10	JOINT TORIQUE EPIDOR OR-420X10
9	420877	SEAL LID	TAPA RETEN	COUVERCLE RESERVES
10	147991	TORIC GASKET 10X23X6,5	JUNTA TORICA 10X23X6,5	JOINT TORIQUE 10X23X6,5
11	255646	FRONT SEAL COVER	TAPA RETEN ANTERIOR	COUVERCLE RESERVE AVANT
12	185587	SEAL	RETEN	RESERVE
13	185504	BEARING NU-2238E	RODAMIENTO NU 2238 ECMA	ROULEMENT NU-2238E
14	255604	BEARING END PIECE	TOPE COJINETES	ARRET ROULEMENTS
15	266981	BEARING BOX	CAJA COJINETES	BOITE ROULEMENTS
16	177378	PRES.GREASE-CUP1/4"STRAIGHTGAS	ENGRASADOR PRES.1/4"GAS RECTO	GRAISEUR PRES.1/4"GAZ DROIT
17	122531	HOSE ELBOW 90º de 20mm	CODO MANGUERA 90º de 20mm	COUDE TUYAU 90º de 20mm
18	149385	BICR.WASHER B DIN125-ST 17	ARAN.B DIN125-ST B.TRI.17	RONDELLE B DIN125-ST BICR.17
19	147082	HEX SCREW 8G DIN933 M16X60	TOR.EX.DIN933-8.8 B.TRI.M16X60	VIS HEX. 8G DIN933 M16X60
20	185512	BEARING 23036CCK/W33	RODAMIENTO 23036 CCK/W33	ROULEMENT 23036CCK/W33
21	185520	DISASSEMBLY SLEEVE AH-3036	MANGUITO DESMONTAJE AH-3036	MANCHON DEMONTAGE AH-3036
22	185256	SEAL RING	ANILLO RETEN	BAGUE RESERVE
23	185397	LOCKING WASHER MB-34	ARANDELA CIERRE MB-34	RONDELLE FERMETURE MB-34
24	185546	FIXING NUT KM-34	TUERCA FIJACION KM-34 KSM	ECROU FIXATION KM-34
25	185595	SEAL 220X250X15 BA	RETEN 220X250X15 DIN 3760-A NBR	RESERVE 220X250X15 BA
26	263541	REAL SEAL COVER	TAPA RETEN POSTERIOR	COUVERCLE RESERVE ARRIERE
27	195735	SAFETY WASHER 6,4 DIN 463	ARANDELA SEGURIDAD 6,4 DIN 463	RONDELLE SECURITE 6,4 DIN 463
28	195743	HEX SCREW DIN933-8.8 M 6X 40	TOR.EX.DIN933-8.8 B.TRI.M 6X40	VIS HEX. DIN933-8,8 M 6X 40

info@zipnasklade.ru
8(800)500-69-51

Nº	REF	DENOMINATION	DENOMINACIÓN	DENOMINATION
29	255588	BASKET PULLEY	POLEA TAMBOR	POULIE TAMBOUR
30	327254	TRAPECIAL BELT SPA-3350	CORREA TRAPECIAL SPA-3350	COURROIE TRAPECIAL SPA-3350
31	185538	SELFCENT.FIX. UNIT 5B 100X145	UNIDAD FIJ.AUTOCENT.5B 100X145	UNITE FIX.SELFCENT.5B 100X145

info@zipnasklade.ru
8(800)500-69-51

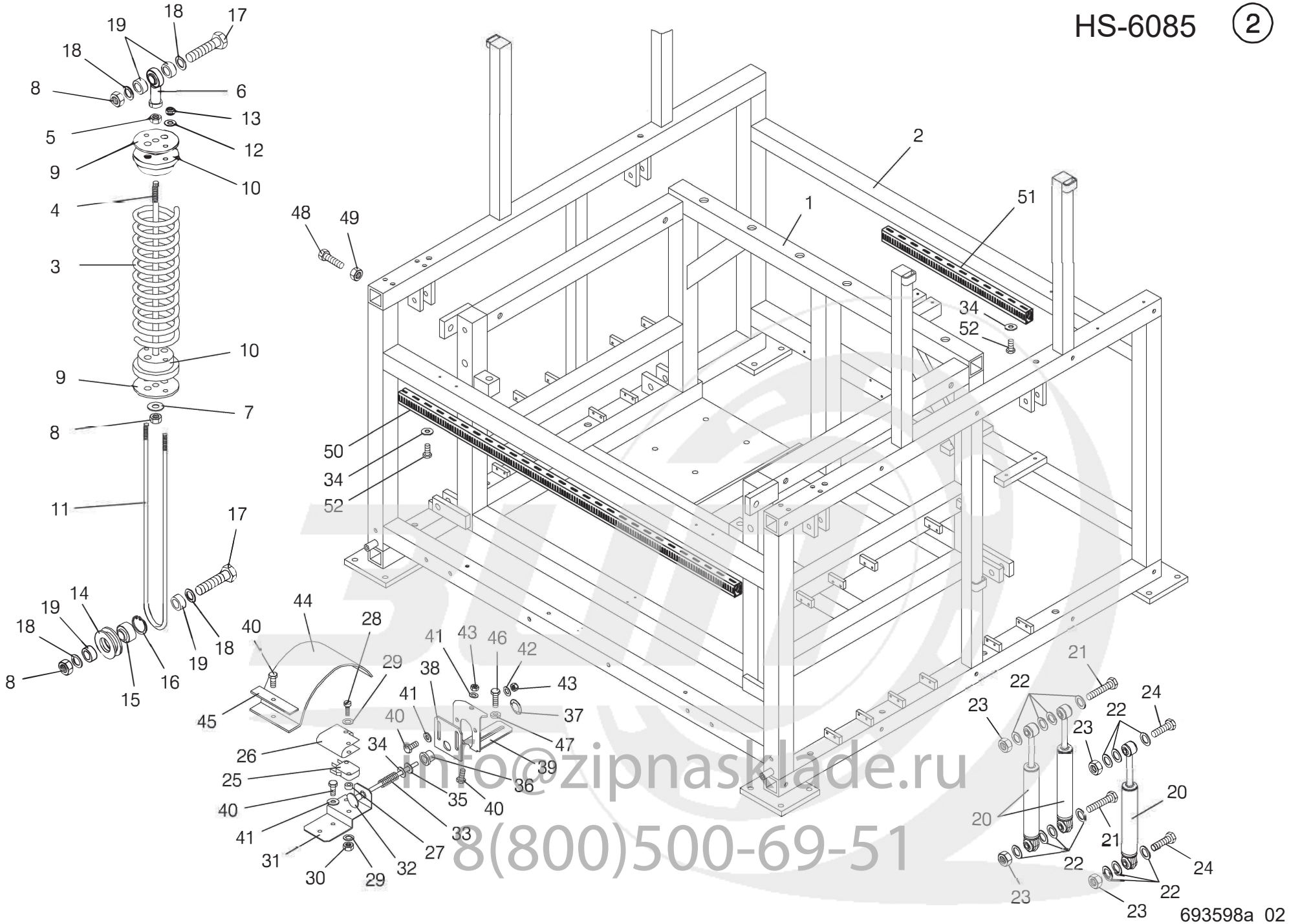

info@zipnasklade.ru
8(800)500-69-51

Nº	REF	DENOMINATION	DENOMINACIÓN	DENOMINATION
1	10118065	SUSPENDED CHASSIS	CHASIS FLOTANTE	CHASSIS SUSPENDU
2	10117927	FIXED CHASSIS	CHASIS FIJO	CHASSIS FIXE
3	300350	SUSPENSION SPRING	MUELLE SUSPENSION	RESSORT SUSPENSION
	278432	SUSPENSION SET (COMPLETE)	CONJUNTO SUSPENSION (COMPLETO)	ENSEMBLE SUSPENSION (COMPLET)
4	278457	SUSPENSION BAR	VARILLA SUSPENSION	BAGUETTE SUSPENSION
5	150276	BICR HEX.NUT DIN934-8 M-16	TUER.EX.DIN934-8 B.TRI.M16	ECROU HEX.DIN934-8 BICR M-16
6	174870	HINGE JOINT HEAD TYPE GIR 17UK	CABEZA DE ROTULA TIPO GIR 17UK	TETE DE ROTULE TYPE GIR 17UK
7	255992	WASHER 36X17X6	ARANDELA 36X17X6 TRIVALEN.	RONDELLE 36X17X6
8	173260	SELF-LOCKING NUT DIN985-8B.TRI.M16	TUER.AUTOBL.DIN985-8B.TRI.M16	ECROU AUTOBLOCANT DIN985-8B.TRI.M16
9	278473	CLAMP SUPPLEMENT	SUPLEMENTO BRIDA	SUPPLEMENT BRIDE
10	278440	SUSPENSION CLAMP	BRIDA SUSPENSION	BRIDE SUSPENSION
11	278465	SUSPENSION PIECE	HORQUILLA SUSPENSION	PIECE SUSPENSION
12	278861	WASHER 26X12,5X6	ARANDELA 26X12.5X6 TRIVALEN.	RONDELLE 26X12,5X6
13	150656	SELF-LOCKING NUT DIN985-8 B.TRI.M12	TUER.AUTOB.DIN985-8 B.TRI.M12	ECROU AUTOBLOCANT DIN985-8 B.TRI.M12
14	206565	SUSPENSION SLEEVE	CASQUILLO SUSPENSION	FRETTE SUSPENSION
15	185728	RADIAL HINGE JOINT TYPE GE	ROTULA RADIAL TIPO GE 17UK	ROTULE RADIAL TYPE GE 17UK
16	185736	RING SEEGER-V JV-30	ANILLO SEEGER-V JV-30	BAGUE SEEGER-V JV-30
17	175729	HEX SCREW 8G DIN 931 M-16X100	TOR.EX.DIN931-8.8B.TRI.M16X100	VIS HEX 8G DIN 931 M-16X100
18	149385	BICR.WASHER B DIN125-ST 17	ARAN.B DIN125-ST B.TRI.17	RONDELLE B DIN125-ST BICR.17
19	238055	HINGE JOINT SEPARATOR	SEPARADOR ROTULA	SEPARATEUR ROTULE
20	333476	SHOCK-ABSORBER SUSPA RD10 120N	AMORTIGUADOR SUSPA RD10 120N	AMORTISSEUR SUSPA RD10 120N
21	191684	HEX SCREW 8G DIN931 M 8X 80	TOR.EX.DIN931-8.8 B.TRI.M 8X80	VIS HEX 8G DIN931 M 8X 80
22	149518	BICR.WASHER B DIN125-ST 8,4	ARAN.B DIN125-ST B.TRI. 8,4	RONDELLE.B DIN125-ST BICR.8,4
23	164285	SELF-LOCKING NUT DIN985-8 B.TRI.M8	TUER.AUTOBL.DIN985-8 B.TRI.M8	ECROU AUTOBLOCANT DIN985-8 B.TRI.M8
24	501965	HEX SCREW 8G DIN931 M 8X 60	TOR.EX.DIN931-8.8 B.TRI.M 8X60	VIS HEX 8G DIN931 M 8X 60
25	197046	MINISWITCH 83161.344 I W3	MINIRRUPTOR 83161.344 I W3	MINIRRUPTEUR 83161.344 I W3
26	281113	MICROSWITCH ISOLATION	AISLANTE MICRORRUPTOR	ISOLANT MICRORRUPTEUR
27	175364	PLASTIC SEPARATOR 6MM SP78/10	SEPARADOR PLASTICO 6MM.SP78/10	SEPARATEUR PLASTIQUE 6MM

info@zipnasklade.ru
8(800)500-69-51

Nº	REF	DENOMINATION	DENOMINACIÓN	DENOMINATION
28	302554	CYL.BICR.SCREW DIN84-4.8 M3X25	TOR.CIL.DIN84-4.8 B.TRI.M 3X25	VIS.CYL DIN84-4.8 BICR M 3X25
29	149484	WASHER DIN 125B M3 ST TRIVALENT	ARANDELA DIN 125B M3 ST TRIVALENTE	RONDELLE DIN 125B M3 ST TRIVALENT
30	149906	INOX. HEX. NUT DIN 934 M-3	TUER.EX.DIN934 INOX A2-70 M 3	ECROU HEX. INOX DIN934 M-3
31	261784	MICROSWITCH DRIVE BRACKET	SOPORTE ACCIONADOR MICRORRUP.	SUPPORT ACTIONNEMENT MICRORRUP
32	189407	MICROSWITCH DRIVE	ACCIONADOR MICRORRUPTOR	ACCIONNEMENT MICRORRUPTEUR
33	189399	MICROSWITCH DRIVE SPRING	MUELLE ACCIONADOR MICRORRUPTOR	RESSORT ACTIONNEMENT MICRORRUP
34	149534	BICR.WASHER B DIN125-ST 5,3	ARAN.B DIN125-ST BICR. 5,3	RONDELLE B BICR.DIN125-ST 5,3
35	147918	QUICK FIXING 211039-6	SUJEC.RAPIDA MIKALOR 211039-6	FIXATION RAPIDE 211039-6
36	278051	MICRO.DRIVE SLEEVE	CASQUILLO ACCIONADOR MICRO	FRETTE ACTIONNEMENT MICRO
37	134924	QUICK FIXING 211044-1	SUJEC.RAPIDA MIKALOR 211044-1	FIXATION RAPIDE 211044-1
38	278069	MICROSWITH ACTIVATOR END-PIECE	TOPE ACCIONADOR MICRORRUPTOR	ARRET ACCIONNATEUR MICROINT.
39	278093	MICRO ACTIV. END-PIECE BRACKET	SOPORTE TOPE ACCIONADOR MICRO.	SUPPORT ARRET ACCIONNAT.MICRO
40	146266	BICR.HEX SCREW DIN933-8 M-4X15	TOR.EX.DIN933-4.8 B.TRI.M 4X15	VIS HEX BICR.DIN933-8.8 M-4X15
41	219758	INOX WASHER 12X4X1,5	ARANDELA 12X4X1.5 INOX	RONDELLE 12X4X1,5 INOX
42	149476	BICR.WASHER B DIN125-ST 4,3	ARAN.B DIN125-ST B.TRI. 4,3	RONDELLE B DIN125-ST BICR.4,3
43	132043	SELF-LOCKING NUT DIN985-8 B.TRI.M 4	TUER.AUTOBL.DIN985-8 B.TRI.M 4	ECROU AUTOBLOCANT DIN985-8 B.TRI.M 4
44	283192	MICROSWITCH PROTECTION COVER	TAPA PROTECCION MICRORRUPTOR	COUVERCLE PROT. MICRORRUPTEUR
45	283200	MICRO PROTECTION FIXING-PIECE	FIJACION PROTECCION MICRO.	FIXATION PROTECTION MICRO
46	165621	BIC HEX SCREW DIN933-8,8 M6X10	TOR.EX.DIN933-8.8 B.TRI.M 6X10	VIS HEX DIN933-8,8 BICR M6X10
47	115733	WASHER 16X7X3	ARANDELA 16X7X3 TRIVALEN.	RONDELLE 16X7X3
48	147082	HEX SCREW 8G DIN933 M16X60	TOR.EX.DIN933-8.8 B.TRI.M16X60	VIS HEX. 8G DIN933 M16X60
49	150276	BICR HEX.NUT DIN934-8 M-16	TUER.EX.DIN934-8 B.TRI.M16	ECROU HEX.DIN934-8 BICR M-16
50	505495	WIRE-STOP DUCT	CANAL PASACABLES	CANAL PASSECABLES
51	505487	WIRE-STOP DUCT	CANAL PASACABLES	CANAL PASSECABLES
52	146274	BICR.HEX SCREW DIN933-8 M-5X10	TOR.EX.DIN933-8.8 B.TRI.M 5X10	VIS HEX.BICR.DIN933-8.8 M-5X10

info@zipnasklade.ru
8(800)500-69-51

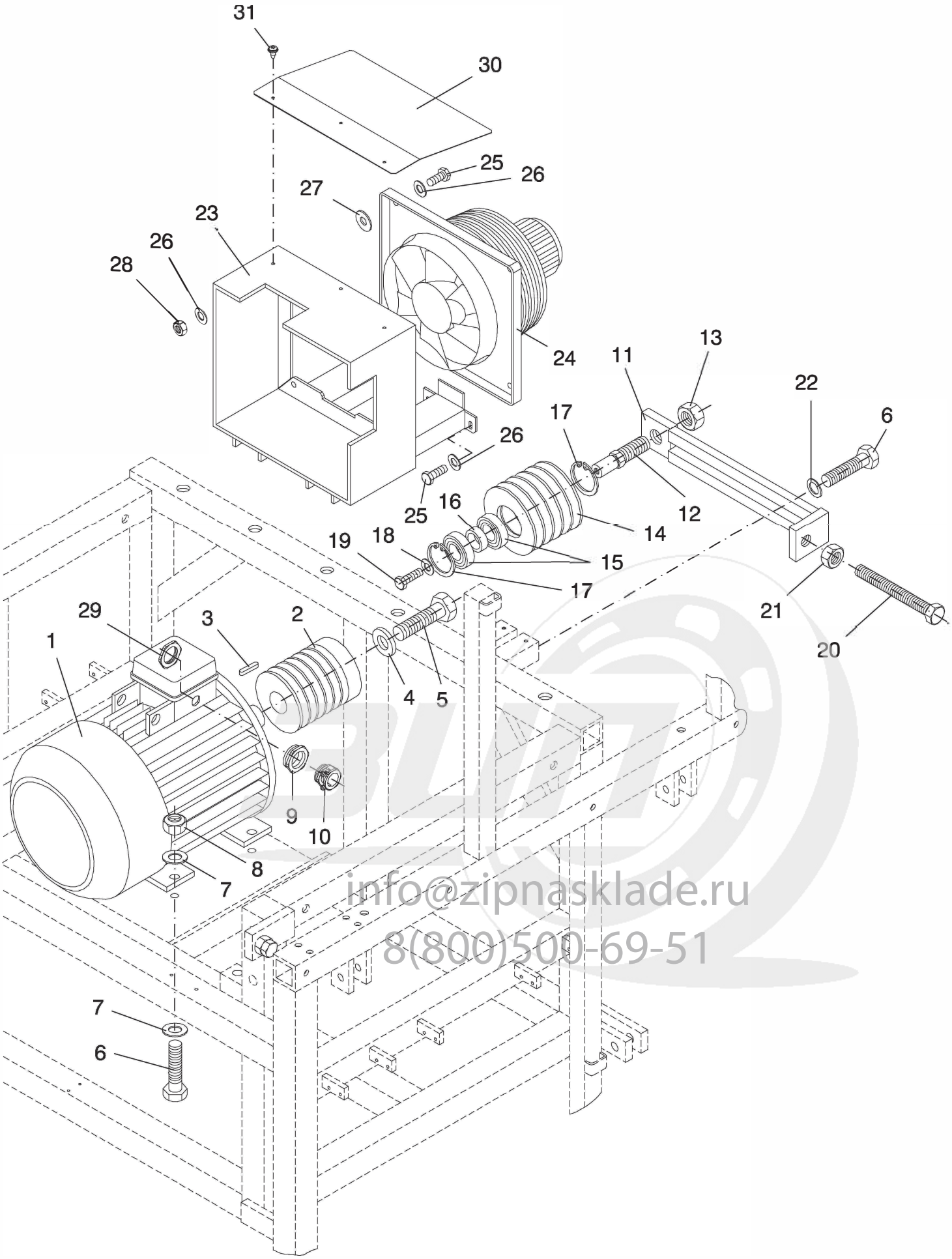

info@zipnasklade.ru
8(800)500-69-51

Nº	REF	DENOMINATION	DENOMINACIÓN	DENOMINATION
1	323816	MOTOR M3AA180LB4 200/400 30KW	MOTOR M3AA180LB4 200/400 30KW*	MOTEUR M3AA180LB4 200/400 30KW
	516849	BEARING NU-310 E (END PULLEY)	RODAMIENTO NU 310 ECP (EXTREMO POLEA)	ROULEMENT NU-310 E (FINAL POULIE)
	315556	BEARING 6209-2Z C3 (OPPOSITE END PULLEY)	RODAMIENTO 6209-2Z C3 (EXTREMO OPUESTO POLEA)	ROULEMENT 6209-2Z C3 (FINAL OPPOSE POULIE)
2	409201	MOTOR PULLEY	POLEA MOTOR	POULIE MOTEUR
3	307637	PIN DIN 6885-A 100X14X9	CHAVETA DIN 6885-A 100X14X9	CLAVETTE DIN 6885-A 100X14X9
4	269126	WASHER 60X17X12	ARANDELA 60X17X12 TRIVALEN.	RONDELLE 60X17X12
5	147066	HEX SCREW 8G DIN933 M16X50	TOR.EX.DIN933-8.8 B.TRI.M16X50	VIS HEX. 8G DIN933 M16X50
6	176172	HEX SCREW DIN 933 8,8 M14x55 TRIVALENT	TORNILLO HEXAGONAL DIN 933 8,8 M14x55 TR	VIS HEXAGONALE DIN 933 8,8 M14x55 TRIVAL
7	149393	WASHER DIN 125B M14 ST TRIVALENT	ARANDELA DIN 125B M14 ST TRIVALENTE	RONDELLE DIN 125B M14 ST TRIVALENT
8	164350	SELF-LOCKING NUT DIN 985 8 M14 TRIVALENT	TUERCA AUTOBLOCANTE DIN 985 8 M14 TRIVAL	ECROU AUTOFREINE DIN 985 8 M14 TRIVALENT
9	326876	ADAPTER M-PG 904029 M40-PG29	ADAPTADOR M40-PG29 *	ADAPTEUR M-PG 904029 M40-PG29
10	326462	STUFFING-BOX EXADIN CLAMP PG29 BRASS	PRENSAESTOPAS EXADIN PG29 LATON	PRESSE-ETOUPES EXADIN BRIDE PG29 LAITON
11	409128	TIGHTENER	TENSOR	TENDEUR
12	409185	TIGHTENER PULLEY SHAFT	MUÑON POLEA TENSOR	AXE POULIE TENDEUR
13	150326	BICR.HEX NUT DIN 934-8 M 24	TUER.EX.DIN934-8 B.TRI.M24	ECROU HEX BICR DIN 934-8 M 24
14	409177	TIGHTENER PULLEY	POLEA TENSORA	POULIE TENDEUSE
15	186841	BEARING 6305-2Z	RODAMIENTO 6305-2Z	ROULEMENT 6305-2Z
16	409193	TIGHTENER BEARING SEPARATOR	SEPARADOR COJINETES TENSOR	SEPARATEUR ROULEMENTS TENDEUR
17	316687	FLEXIBLE RING I-62 DIN 472	ANILLO ELASTICO I- 62 DIN 472	BAGUE ELASTIQUE I-62 DIN 472
18	115428	WASHER 30X10,5X3	ARANDELA 30X10,5X3 TRIVALEN.	RONDELLE 30X10,5X3
19	146480	BICR.HEX SCREW DIN933-8 M10X20	TOR.EX.DIN933-8.8 B.TRI.M10X20	VIS HEX BICR.DIN933-8 M 10X20
20	409151	TIGHTENER SCREW	TORNILLO TENSOR	VIS TENDEUR
21	150250	BICR HEX.NUT DIN 934-8 M 14	TUER.EX.DIN934-8 B.TRI.M14	ECROU HEX.BICR DIN 934-8 M 14
22	219071	WASHER 40X15X5	ARANDELA 40X15X5 TRIVALEN.	RONDELLE 40X15X5
23	10119113	FAN BOX	CAJA VENTILADOR	BOITE VENTILATEUR
24	508036	FAN HEP-25-4T/H-GIRB	VENT.HEP-25-4T/H-GIRB CSA-CE *	VENTILATEUR HEP-25-4T/H-GIRB
25	166652	BIC.HEX SCREW DIN933-8.8 M8X15	TOR.EX.DIN933-8.8 B.TRI.M 8X15	VIS HEX DIN933-8.8 BICR. M8X15

info@zipnasklade.ru
8(800)500-69-51

Nº	REF	DENOMINATION	DENOMINACIÓN	DENOMINATION
26	149518	BICR.WASHER B DIN125-ST 8,4	ARAN.B DIN125-ST B.TRI. 8,4	RONDELLE.B DIN125-ST BICR.8,4
27	258822	WASHER 19X8.5X4	ARANDELA 19X8.5X4 TRIVALEN.	RONDELLE 19X8.5X4
28	150201	BICR.HEX NUT DIN 934-8 M-8	TUER.EX.DIN934-8 B.TRI.M 8	ECROU HEX.DIN 934-8 BICR.M-8
29	326884	NUT M40	TUERCA M314005 M40	ECROU M40
30	10119311	DRAIN PROTECTION	PROTECCIÓN VENTILADOR	PROTECTION VIDANGE
31	183400	PLATE SCREW ST-4, 20 P.F. C/AL.T25	TORNILLO CHAPA ST-4 (ESPECIAL)*	VIS PLAQUE ST-4, 20 P.F. C/AL.T25

info@zipnasklade.ru
8(800)500-69-51

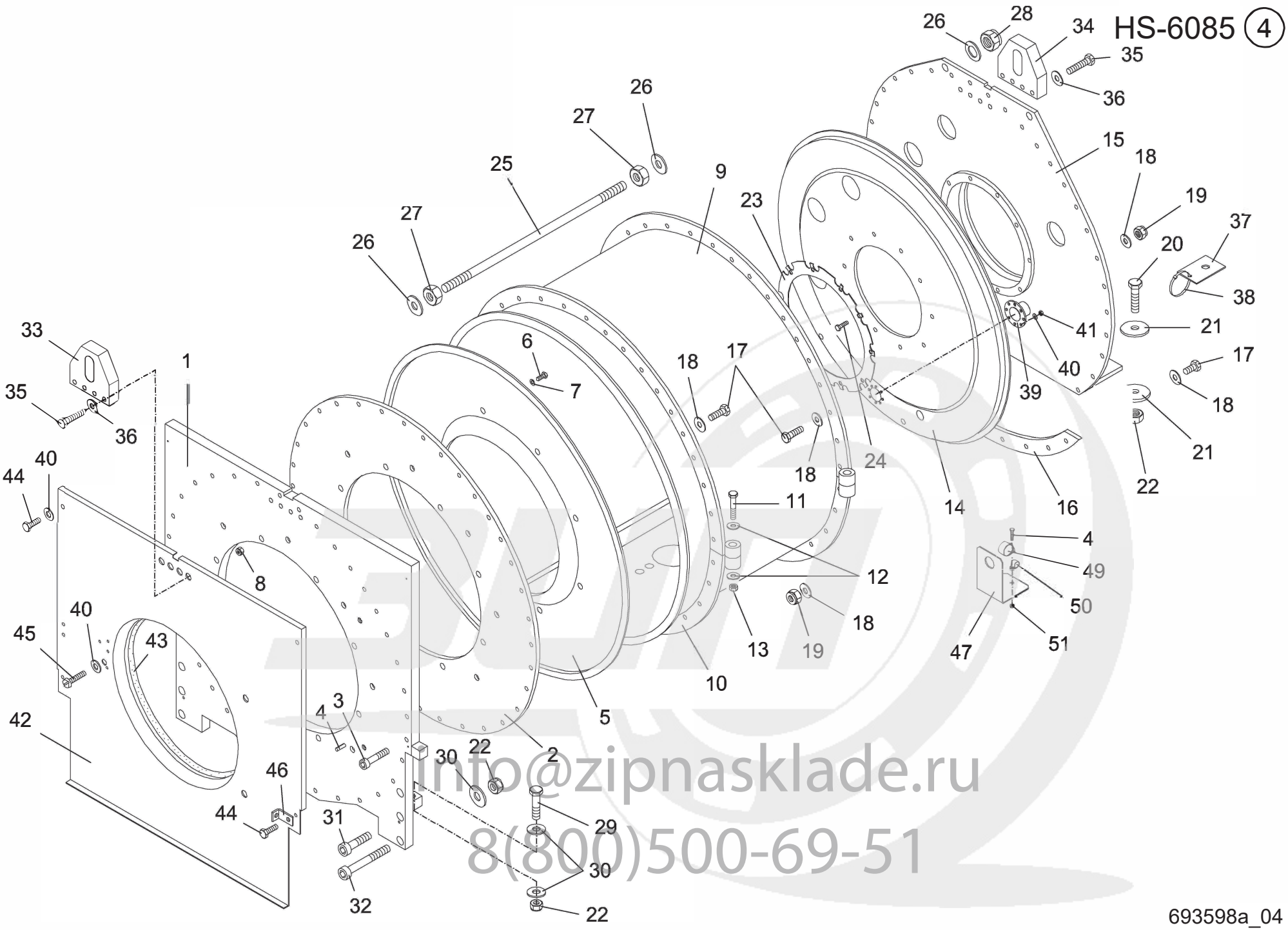

info@zipnasklade.ru
8(800)500-69-51

693598a_04

Nº	REF	DENOMINATION	DENOMINACIÓN	DENOMINATION
1	277301	FRONT PLATE	PLACA FRONTAL	PLAQUE FRONTAL
2	255711	OUTER DRUM FRONT CROWN	CORONA FRONTAL ENVOLVENTE	COURONNE FRONTAL CUVE
3	134981	SCREW ALLEN DIN912 M-16X60	TOR.ALLDIN912-8.8 B.TRI.M16X60	VIS ALLEN DIN912 M-16X60
4	150763	FLEXIBLE PIN DIN1481 D4X10	PASADOR ELASTICO DIN1481 D4X10	GOUJON ELASTIQUE DIN1481 D4X10
5	255638	OUTER DRUM FRONT PANEL	FRONTAL ENVOLVENTE	FRONTAL CUVE
6	145003	INOX HEX SCREW DIN 933 M-10X50	TOR.EX.DIN933INOX A2-70 M10X50	VIS HEX INOX DIN 933 M-10X50
7	175273	USIT GASKET TYPE UA 16X10X1,5	JUNTA USIT TIPO UA 16X10X1,5	JOINT USIT TYPE UA 16X10X1,5
8	150649	SELF-LOCKING NUT DIN985-8 B.TRI.M10	TUER.AUTOB.DIN985-8 B.TRI.M10	ECROU AUTOBLOCANT DIN985-8 B.TRI.M10
9	10293249	EXTERNAL OUTER DRUM	ENVOLVENTE	CUVE
10	200394	OUTER DRUM FIXING RING	ARO FIJACION ENVOLVENTE	BAGUE FIXATION CUVE
11	175703	HEX SCREW 8G DIN 931 M-14X100	TOR.EX.DIN931-8.8B.TRI.M14X100	VIS HEX 8G DIN 931 M-14X100
12	149393	WASHER DIN 125B M14 ST TRIVALENT	ARANDELA DIN 125B M14 ST TRIVALENTE	RONDELLE DIN 125B M14 ST TRIVALENT
13	164350	SELF-LOCKING NUT DIN 985 8 M14 TRIVALENT	TUERCA AUTOBLOCANTE DIN 985 8 M14 TRIVAL	ECROU AUTOFREINE DIN 985 8 M14 TRIVALENT
14	411041	OUTER-DRUM BOTTOM	FONDO ENVOLVENTE	FOND CUVE
15	454793	REAR PLATE	PLACA POSTERIOR	PLAQUE ARRIERE
16	255679	OUTER DRUM SEMI-RING	SEMI-ARO ENVOLVENTE	SEMI-BAGUE CUVE
17	186908	HEX SCREW 8G DIN931 M16X70	TOR.EX.DIN931-8.8 B.TRI.M16X70	VIS HEX 8G DIN931 M16X70
18	255992	WASHER 36X17X6	ARANDELA 36X17X6 TRIVALEN.	RONDELLE 36X17X6
19	173260	SELF-LOCKING NUT DIN985-8B.TRI.M16	TUER.AUTOBL.DIN985-8B.TRI.M16	ECROU AUTOBLOCANT DIN985-8B.TRI.M16
20	186890	HEX SCREW 8G DIN931 M20X170	TOR.EX.DIN931-8.8B.TRI.M20X170	VIS HEX 8G DIN931 M20X170
21	216796	WASHER 65X21X15	ARANDELA 65X21X15 TRIVALEN.	RONDELLE 65X21X15
22	186866	SELF-LOCKING NUT DIN985-8B.TRI.M20	TUER.AUTOBL.DIN985-8B.TRI.M20	ECROU AUTOBLOCANT DIN985-8B.TRI.M20
23	255737	SCREW FIXING DISK	DISCO SUJECION TORNILLOS	DISQUE FIXATION VIS
24	144931	HEX SCREW DIN 933 A2-70 M10x20	TORNILLO HEXAGONAL DIN 933 A2-70 M10x20	VIS HEXAGONALE DIN 933 A2-70 M10x20
25	10293348	SUPPORT STRETCHER OUTER DRUM	TIRANTE ENVOLVENTE	TIRANT SUPPORT CUVE
26	149559	BICR WASHER B DIN125-ST 31	ARAN.B DIN125-ST B.TRI.31	RONDELLE B BICR. DIN125-ST 31
27	150334	BICR.NUT DIN934-8 BICR.M 30	TUER.EX.DIN934-8 B.TRI.M30	ECROU HEX DINN934-8 BICR.M 30
28	185637	SELF-LOCKING NUT DIN985-8B.TRI.M30	TUER.AUTOBL.DIN985-8B.TRI.M30	ECROU AUTOBLOCANT DIN985-8B.TRI.M30

info@zipnasklade.ru
8(800)500-69-51

Nº	REF	DENOMINATION	DENOMINACIÓN	DENOMINATION
29	147132	HEX SCREW 8G DIN931 M20X130	TOR.EX.DIN931-88 B.TRI.M20X130	VIS HEX 8G DIN931 M20X130
30	149427	BICR WASHER B DIN125-ST 21	ARAN.B DIN125-ST B.TRI.21	RONDELLE B BICR.DIN125-ST 21
31	175752	ALLEN SCREW DIN 912 M-20X60	TOR.ALLDIN912-8.8 B.TRI.M20X60	VIS ALLEN DIN 912 M-20X60
32	186858	ALLEN SCREW DIN912 M20X130	TOR.ALLDIN912-8.8B.TRI.M20X130	VIS ALLEN DIN912 M20X130
33	255687	LOADING HOOK	GANCHO DE CARGA	CROCHET DE CHARGEMENT
34	263400	LOADING HOOK	GANCHO DE CARGA	CROCHET DE CHARGEMENT
35	188292	HEX SCREW DIN933-8.8 BICR.	TOR.EX.DIN933-8.8 B.TRI.M16X55	VIS HEX DIN933-8.8 BICR.M16X55
36	149385	BICR.WASHER B DIN125-ST 17	ARAN.B DIN125-ST B.TRI.17	RONDELLE B DIN125-ST BICR.17
37	258442	PRESSOSTAT HOSE BRACKET	SOPORTE TUBO PRESOSTATO	SUPPORT TUBE PRESSOSTAT
38	140509	BLACK POLYAMIDE CLAMP 7.5X360MM	BRIDA POLIAMIDA NEGRA 7.5X360MM	BRIDE POLYAMIDE NOIR 7.5X360MM
39	433755	STEAM INLET PLATE	PLATINA ENTRADA VAPOR	PLAT ENTREE VAPEUR
40	149351	WASHER DIN 125B M8 INOX A2	ARANDELA DIN 125B M8 INOX A2	RONDELLE DIN 125B M8 INOX A2
41	149963	INOX HEX NUT DIN 934 M-8	TUER.EX.DIN934 INOX A2-70 M 8	ECROU HEX. INOX DIN 934 M-8
42	277319	FRONT COVER	TAPA FRONTAL	COUVERCLE FRONTAL
43	165472	ETHILENE-PROP. PROFILE	PERFIL ETILENO-PROP.REF.44117L	PROFILE ETHILENE-PROP.
44	144964	HEX SCREW DIN 933 A2-70 M8x16	TORNILLO HEXAGONAL DIN 933 A2-70 M8x16	VIS HEXAGONALE DIN 933 A2-70 M8x16
45	145342	SCREW DIN 85 M8X20	TOR.ALOM.INOX DIN 85 M 8X20	VIS DIN 85 M8X20
46	264689	MOTOR TIGHTENER	TENSOR MOTORES	TENDEUR MOTEURS
47	511071	PRESSOSTAT HOSE BRACKET	SOPORTE MANGUERAS	SUPPORT TUBE PRESSOSTAT
48	184184	BIC HEX SCREW DIN933-8.8 M4X20	TOR.EX.DIN933-4.8 B.TRI.M 4X20	VIS HEX DIN933-8.8 BICR.M 4X20
49	510644	ALUMINIUM WASHER AL16	ABRAZADERA ALUMINIO AL16	RONDELLE ALUMINIUM AL16
50	354761	ALUMINIUM WASHER AL7	ABRAZADERA ALUMINIO AL7	RONDELLE ALUMINIUM AL7
51	132043	SELF-LOCKING NUT DIN985-8 B.TRI.M 4	TUER.AUTOBL.DIN985-8 B.TRI.M 4	ECROU AUTOBLOCANT DIN985-8 B.TRI.M 4

info@zipnasklade.ru
8(800)500-69-51

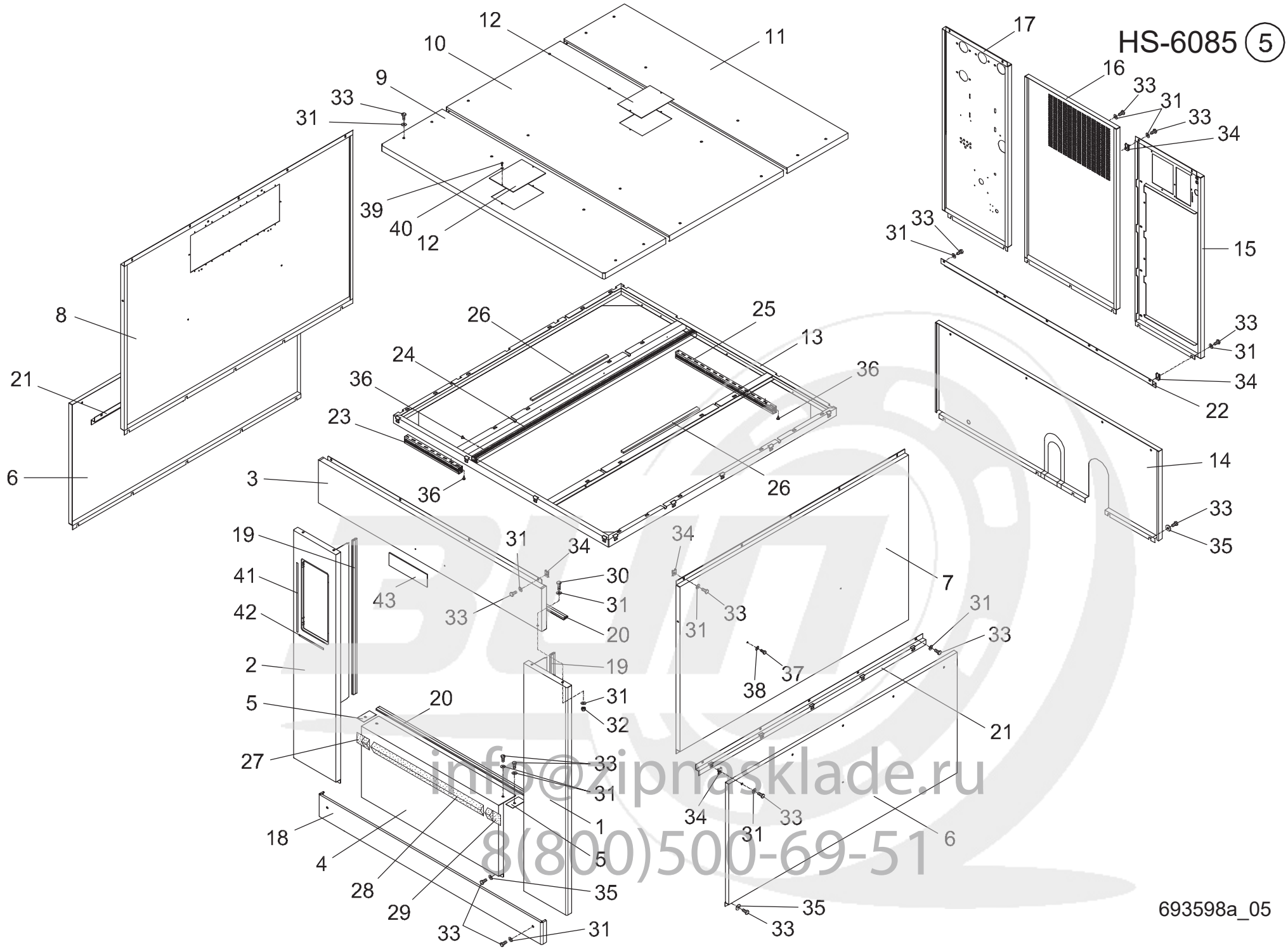

info@zipnasklade.ru
8(800)500-69-51

Nº	REF	DENOMINATION	DENOMINACIÓN	DENOMINATION
1	454348	RIGHT FRONT COVER (INOX)	TAPA FRONTAL DERECHA (INOX)	COUVERCLE FRONTAL DROIT (INOX)
	456590	RIGHT FRONT COVER (PRE-COATED)	TAPA FRONTAL DERECHA (PRE-COATED)	COUVERCLE FRONTAL DROIT (PRE-COATED)
2	454355	LEFT FRONT COVER (INOX)	TAPA FRONTAL IZQUIERDA (INOX)	COUVERCLE FRONTAL GAUCHE (INOX)
	456574	LEFT FRONT COVER (PRE-COATED)	TAPA FRONTAL IZQUIERDA (PRE-COATED)	COUVERCLE FRONTAL GAUCHE (PRE-COATED)
3	454546	CONTROL PANEL	PANEL DE MANDOS	PANNEAU DE COMMANDES
4	454322	LOWER FRONT COVER (INOX)	T. FRONTAL INFERIOR INOX (INOX)	COUVERCLE FRONTAL INFERIEUR (INOX)
	533166	LOWER FRONT COVER (PRE-COATED)	T. FRONTAL INFERIOR PRECOATED (PRE-COATED)	COUVERCLE FRONTAL INFERIEUR (PRE-COATED)
5	277970	LOWER PLATE SUPPLEMENT	SUPLEMENTO TAPA INFERIOR	SUPPLEMENT COUVERCLE INFERIEUR
6	454116	LOWER SIDE COVER (INOX)	TAPA LATERAL INFERIOR (INOX)	COUVERCLE LATERAL INFERIEUR (INOX)
	456566	LOWER SIDE COVER (PRE-COATED)	TAPA LATERAL INFERIOR (PRE-COATED)	COUVERCLE LATERAL INFERIEUR (PRE-COATED)
7	411058	UPPER SIDE COVER (INOX)	TAPA LATERAL SUPERIOR (INOX)	COUVERCLE LATERAL SUPERIEUR (INOX)
	446021	UPPER SIDE COVER (PRE-COATED)	TAPA LATERAL SUPERIOR (PRE-COATED)	COUVERCLE LATE.SUPERIEUR (PRE-COATED)
8	240333	UPPER SIDE COVER (INOX)	TAPA LATERAL SUPERIOR (INOX)	COUVERCLE LATERAL SUPERIEUR (INOX)
	446039	UPPER SIDE COVER (PRE-COATED)	TAPA LATERAL SUPERIOR (PRE-COATED)	COUVERCLE LATE.SUPERIEUR (PRE-COATED)
9	454660	FRONT UPPER COVER	TAPA SUPERIOR ANTERIOR	COUVERCLE SUPERIEUR ANTERIEUR
10	10357283	CENTRAL UPPER COVER	TAPA SUPERIOR CENTRAL	COUVERCLE SUPERIEUR CENTRAL
11	454611	REAR UPPER COVER	TAPA SUPERIOR POSTERIOR	COUVERCLE SUPERIEUR ARRIERE
12	446872	LOADING HOOK COVER	TAPA GANCHOS CARGA	COUVERCLE CROCHET CHARGEMENT
13	358614	UPPER FRAME	BASTIDOR SUPERIOR	BATI SUPERIEUR
14	455808	LOWER REAR COVER	TAPA POSTERIOR INFERIOR	COUVERCLE ARRIERE INFERIEUR
15	455741	RIGHT REAR COVER	TAPA POSTERIOR DERECHA	COUVERCLE ARRIERE DROIT
16	410878	CENTRAL REAR COVER	TAPA POSTERIOR CENTRAL	COUVERCLE ARRIERE CENTRAL

info@zipnasklade.ru
8(800)500-69-51

Nº	REF	DENOMINATION	DENOMINACIÓN	DENOMINATION
17	454066	LEFT REAR COVER	TAPA POSTERIOR IZQUIERDA	COUVERCLE ARRIERE GAUCHE
18	454561	BASE	ZOCALO	SOCLE
19	278697	RIGHT & LEFT FRONT PROFILE	PERFIL FRONTAL DER.E IZQU.	PROFILE FRONTAL DROIT/GAUCHE
20	278747	LOWER FRONT PROFILE	PERFIL FRONTAL INFERIOR	PROFILE FRONTAL INFERIEUR
21	357772	LOWER COVER PROFILE	PERFIL TAPA INFERIOR	PROFILE COUVERCLE INFERIEUR
22	357780	LOWER COVER PROFILE	PERFIL TAPA INFERIOR	PROFILE COUVERCLE INFERIEUR
23	505479	WIRE-STOP DUCT	CANAL PASACABLES	CANAL PASSECABLES
24	505503	WIRE-STOP DUCT	CANAL PASACABLES	CANAL PASSECABLES
25	453621	WIRETHROUGH CHANNEL	CANAL PASACABLES	CANAL PASSECABLES
26	454041	COVER ABSORBER PROFILE	PERFIL AMORTIGUADOR TAPA	PROFILE AMORTISSEUR COUVERCLE
27	174599	TERMINAL RE V-4 LEFT	TERMINAL REF.V-4 IZQUIERDA	TERMINAL REF V-4 GAUCHE
28	206128	PROTECTION PROFILE	PERFIL PROTECCION	PROFILE PROTECTION
29	174581	TERMINAL RE. V-4 RIGHT	TERMINAL REF.V-4 DERECHA	TERMINAL REF.V-4 DROITE
30	146399	BICR HEX SCREW DIN933-8 M8X20	TOR.EX.DIN933-8.8 B.TRI.M 8X20	VIS HEX DIN933-8.8 BICR.M8X20
31	149518	BICR.WASHER B DIN125-ST 8,4	ARAN.B DIN125-ST B.TRI. 8,4	RONDELLE.B DIN125-ST BICR.8,4
32	164285	SELF-LOCKING NUT DIN985-8 B.TRI.M8	TUER.AUTOBL.DIN985-8 B.TRI.M8	ECROU AUTOBLOCANT DIN985-8 B.TRI.M8
33	166652	BIC.HEX SCREW DIN933-8.8 M8X15	TOR.EX.DIN933-8.8 B.TRI.M 8X15	VIS HEX DIN933-8.8 BICR. M8X15
34	354597	QUICK NUT TRT M8-1 0212829	TUER.RAPIDA TRT M8-1 0212829	ECROU RAPIDE TRT M8-1 0212829
35	358101	WASHER PL.DIN9021 24X8.4X2ST.TRI	ARAN.PL.DIN9021 24X8.4X2ST.TRI	ROND.PL.DIN9021 24X8.4X2ST.TRI
36	183400	PLATE SCREW ST-4, 20 P.F. C/AL.T25	TORNILLO CHAPA ST-4 (ESPECIAL)*	VIS PLAQUE ST-4, 20 P.F. C/AL.T25
37	165621	BIC HEX SCREW DIN933-8,8 M6X10	TOR.EX.DIN933-8.8 B.TRI.M 6X10	VIS HEX DIN933-8,8 BICR M6X10
38	149526	BICR.WASHER B DIN125-ST 6,4	ARAN.B DIN125-ST B.TRI. 6,4	RONDELLE B DIN125-ST BICR.6,4
39	146076	BICR ROUND SCREW DIN84 M 4X 8	TOR.CIL.DIN84-4.8 B.TRI.M 4X 8	VIS ROND BICR DIN84-4.8 M 4X 8
40	149476	BICR.WASHER B DIN125-ST 4,3	ARAN.B DIN125-ST B.TRI. 4,3	RONDELLE B DIN125-ST BICR.4,3
41	505511	ANTI-VIBRATION TGRIM	BURLETE ANTIVIBRANTE	GARNITURE ANTI-VIBRATION
42	505446	ANTI-VIBRATI0N TGRIM	BURLETE ANTIVIBRANTE	GARNITURE ANTI-VIBRATION
43	304568	CONTINENTAL PLATE	PLACA CONTINENTAL	PLAQUE CONTINENTAL

info@zipnasklade.ru
8(800)500-69-51

Nº	REF	DENOMINATION	DENOMINACIÓN	DENOMINATION
	147918	QUICK FIXING 211039-6 (2 UNITS)	SUJEC.RAPIDA MIKALOR 211039-6 (2 UNIDADES)	FIXATION RAPIDE 211039-6 (2 UNITES)
	511907	GIRBAU PLATE	PLACA GIRBAU	GIRBAU PLAQUE
	147918	QUICK FIXING 211039-6 (2 UNITS)	SUJEC.RAPIDA MIKALOR 211039-6 (2 UNIDADES)	FIXATION RAPIDE 211039-6 (2 UNITES)

info@zipnasklade.ru
8(800)500-69-51

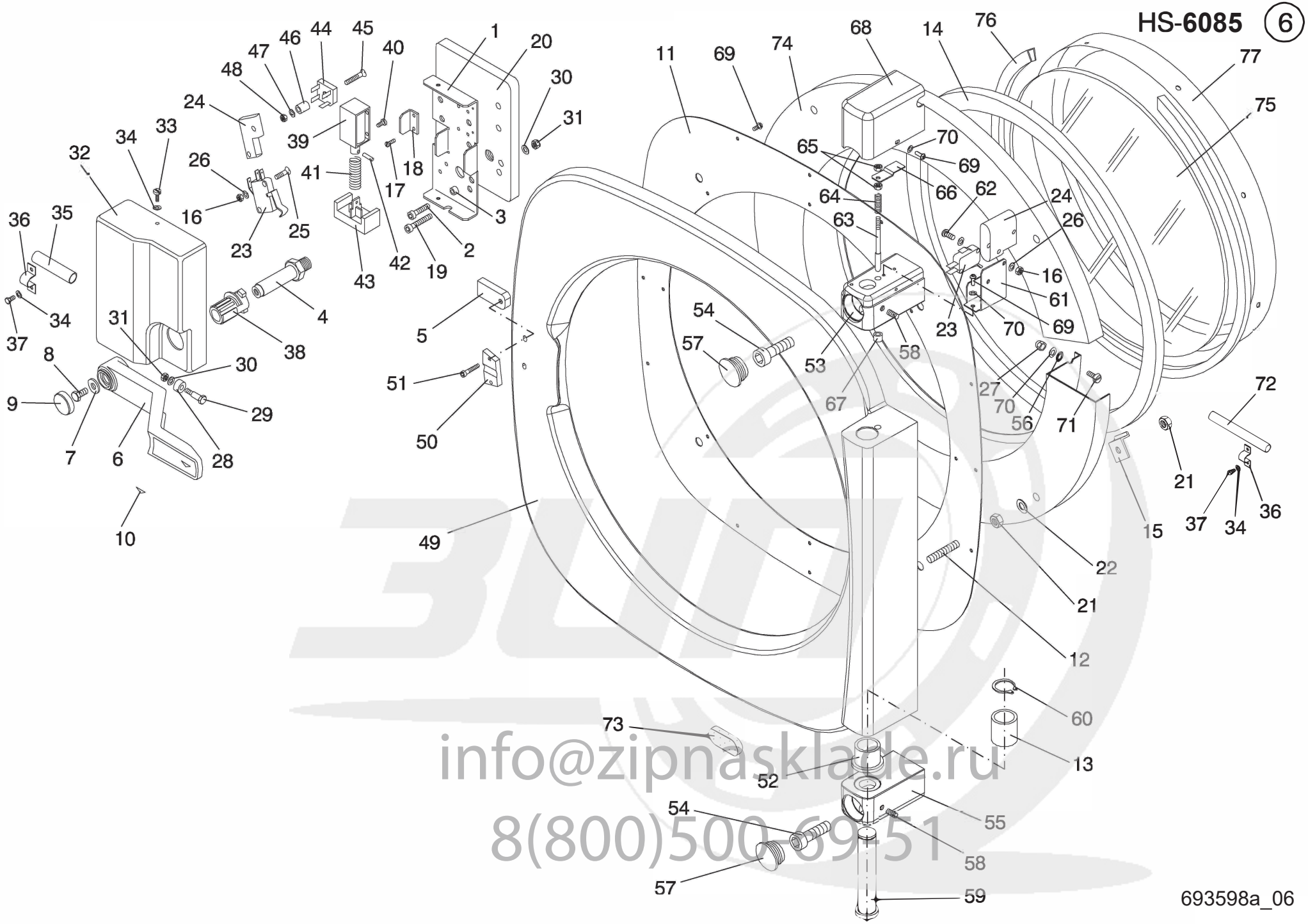

693598a_06

info@zipnasklade.ru
8(800)500-69-51

Nº	REF	DENOMINATION	DENOMINACIÓN	DENOMINATION
1	512517	SAFETY LOCK BRACKET	SOPORTE CIERRE SEGURIDAD	SUPPORT FERMETURE DE SECURITE
2	144352	ALLEN SCREW DIN 912 8,8 M6x25 TRIVALENT	TORNILLO ALLEN DIN 912 8,8 M6x25 TRIVALE	VIS ALLEN DIN 912 8,8 M6x25 TRIVALENT
3	276527	LOCK END-PIECE	TOPE CIERRE	ARRET FERMETURE
4	276485	LOCK SHAFT	EJE CIERRE	AXE FERMETURE
5	506311	18X18 PLATE	PLETINA DE 18X8	PLAQUE DE 18X18
6	199257	KNOB	EMPUÑADURA	POIGNEE
7	115733	WASHER 16X7X3	ARANDELA 16X7X3 TRIVALEN.	RONDELLE 16X7X3
8	165621	BIC HEX SCREW DIN933-8,8 M6X10	TOR.EX.DIN933-8.8 B.TRI.M 6X10	VIS HEX DIN933-8,8 BICR M6X10
9	189993	KNOB STOPPER	TAPON EMPUÑADURA	BOUCHON POIGNEE
10	193599	KNOB PLATE	PLACA EMPUÑADURA	PLAQUE POIGNEE
11	453167	SPYHOLE HOLDER	PORTA-MIRILLA	SUPPORT VITRE
12	290627	DOOR BUMP	ESPARRAGO ESCOTILLA	GOUJON HUBLOT
13	350561	SELFOIL SLEEVE B11A22-28-30	COJ. SELFOIL B11A22-28-30	FRETTE SELFOIL B11A22-28-30
14	183624	DOOR GASKET	JUNTA ESCOTILLA	JOINT HUBLOT
	342634	SILICONE DOOR GASKET (SPARE PARTS ONLY)	JUNTA ESCOTILLA SILICONA (SOLO RECAMBIOS)	JOIN HUBLOT SILICONE (SEULEMENT PIECES DETACHEES)
15	216820	DOOR GASKET CLIP	GRAPA JUNTA ESCOTILLA	CLIP JOINT HUBLOT
16	149906	INOX. HEX. NUT DIN 934 M-3	TUER.EX.DIN934 INOX A2-70 M 3	ECROU HEX. INOX DIN934 M-3
17	146035	BICR CYL SCREW DIN84 M-3X10	TOR.CIL.DIN84-4.8 B.TRI.M 3X10	VIS CYL BICR DIN84-4.8 M 3X10
18	279810	LOCKING BOX COVER	TAPETA CAJA CIERRE	COUVERCLE BOITE FERMETURE
19	302331	ALLEN SCREW DIN 912 8,8 M6x35 TRIVALENT	TORNILLO ALLEN DIN 912 8,8 M6x35 TRIVALE	VIS ALLEN DIN 912 8,8 M6x35 TRIVALENT
20	276543	LOCKING BASE	BASE CIERRE	BASE FERMETURE
21	149948	HEX NUT DIN 934 A2-70 M12	TUERCA HEXAGONAL DIN 934 A2-70 M12	ECROU HEXAGONALE DIN 934 A2-70 M12
22	149302	INOX.A2 WASHER DIN 125 13	ARAN. DIN125 INOX A2 13	RONDELLE INOX.A2 DIN 125 13
23	279760	MICROSWITCH	MINIRRUPTOR	MICRORRUPTEUR
24	281113	MICROSWITCH ISOLATION	AISLANTE MICRORRUPTOR	ISOLANT MICRORRUPTEUR
25	303131	COUNTERSUNK SCREW DIN 963 4,8 M3x20 TRIV	TORNILLO AVELLANADO DIN 963 4,8 M3x20 TR	VIS FRAISEE DIN 963 4,8 M3x20 TRIVALENT
26	149484	WASHER DIN 125B M3 ST TRIVALENT	ARANDELA DIN 125B M3 ST TRIVALENTE	RONDELLE DIN 125B M3 ST TRIVALENT
27	281113	MICROSWITCH ISOLATION	AISLANTE MICRORRUPTOR	ISOLANT MICRORRUPTEUR

info@zipnasklade.ru
8(800)500-69-51

Nº	REF	DENOMINATION	DENOMINACIÓN	DENOMINATION
28	276519	KNOB ROLL	RODILLO EMPUÑADURA	ROULEAU POIGNEE
29	276477	KNOB BOLT	BULON EMPUÑADURA	BOULON POIGNEE
30	149526	BICR.WASHER B DIN125-ST 6,4	ARAN.B DIN125-ST B.TRI. 6,4	RONDELLE B DIN125-ST BICR.6,4
31	176834	SELF-LOCKING NUT DIN985-8 B.TRI.M6	TUER.AUTOBL.DIN985-8 B.TRI.M6	ECROU AUTOBLOCANT DIN985-8 B.TRI.M6
32	199307	SAFETY LOCK BOX	CAJA CIERRE SEGURIDAD	BOITE FERMETURE SECURITE
33	300632	INOX A2-70 SCREW DIN85 M5X 8	TOR.PLA.DIN85 INOX A2-70 M5X 8	VIS DIN85 INOX A2-70 M5X 8
34	149369	INOX A2 WASHER DIN 125 5,3	ARAN. DIN125 INOX A2 5,3	RONDELLE INOX A2 DIN 125 5,3
35	276899	WIRE PROTECTION HOSE	TUBO PROTECCION CABLES	TUBE PROTECTION CABLES
36	276824	WIRE PROTECTION CLAMP	BRIDA PROTECCION CABLES	BRIDE PROTECTION CABLES
37	144774	HEX SCREW DIN 933 A2-70 M5x10	TORNILLO HEXAGONAL DIN 933 A2-70 M5x10	VIS HEXAGONALE DIN 933 A2-70 M5x10
38	283689	LOCK KNOB JOINTING	UNION EMPUÑADURA CIERRE	UNION POIGNEE FERMETURE
39	283697	SAFETY LOCK COIL	BOBINA CIERRE SEGURIDAD	BOBINE FERMETURE SECURITE
40	147561	SCREW DIN963-4.8 M 3X 7	TOR.AV.DIN963-4.8 B.TRI.M 3X 7	VIS DIN963-4.8 BICR M 3X 7
41	300665	COIL SPRING	MUELLE BOBINA	RESSORT BOBINE
42	150698	FLEXIBLE PIN DIN1481 D3X10	PASADOR ELASTICO DIN1481 D3X10	GOUJON ELASTIQUE DIN1481 D3X10
43	276402	SLIDING BLOCKER	BLOQUEADOR DESLIZANTE	BLOQUEUR COULISSANT
44	175224	RECTIFIER BRIDGE	PUENTE RECTIFICADOR *	PONT RECTIFIEUR
45	199240	BICR.SCREW DIN963-4.8 M4X30	TOR.AV.DIN963-4.8 B.TRI M 4X30	VIS T/FRAIS.DIN963-4 BIC.M4X30
46	300467	CYLINDER SEPARATOR SS10-4 CPVC	SEPARADOR CILINDR.SS10-4 CPVC	SEPARATEUR CYLINDR.SS10-4 CPVC
47	149476	BICR.WASHER B DIN125-ST 4,3	ARAN.B DIN125-ST B.TRI. 4,3	RONDELLE B DIN125-ST BICR.4,3
48	150185	BICR.HEX.NUT DIN934-8 M4	TUER.EX.DIN934-8 B.TRI.M 4	ECROU HEX.DIN934-8 BICR.M4
49	453076	DOOR BODY	CUERPO ESCOTILLA	CORPS HUBLOT
50	604272	DOOR LOCK PIECE	PIEZA CIERRE SEGURIDAD	PIECE FERMETURE HUBLOT
51	144295	BICR.SCREW ALLEN912-8.8 M 5X25	TOR.ALLDIN912-8.8 B.TRI.M 5X25	VIS ALLDIN912-8.8 BICR.M 5X 25
52	174482	SELFOIL SLEEVE B11B22-28-25/33	COJ. SELFOIL B11B22-28-25/33-4	FRETTE SELFOIL B11B22-28-25/33
53	438283	HINGE	BISAGRA	CHARNIERE
54	175752	ALLEN SCREW DIN 912 M-20X60	TOR.ALLDIN912-8.8 B.TRI.M20X60	VIS ALLEN DIN 912 M-20X60
55	438291	HINGE	BISAGRA	CHARNIERE

info@zippasklade.ru
8(800)500-69-51

Nº	REF	DENOMINATION	DENOMINACIÓN	DENOMINATION
56	116129	SCREW GASKET	JUNTA TORNILLO	JOINT VIS
57	176776	CONICAL END FIG. 26 D38	TOPE CONICO FIG.26 D38	ARRET CONIQUE FIG. 26 D38
58	175778	ALLEN BUMP DIN 916 M-8X15	ESP.ALL.DIN916-10.9 M 8X15	GOUJON ALLEN DIN 916 M-8X15
59	206995	DOOR BOLT	BULON ESCOTILLA	BOULON HUBLOT
60	174524	FLEXIBLE RING E-22 DIN 471	ANILLO ELASTICO E-22 DIN 471	BAGUE ELASTIQUE E-22 DIN 471
61	276857	MICROSWITCH BRACKET	SOPORTE MICRORRUPTOR	SUPPORT MICRORRUPTEUR
62	146043	BIC CYL SCREW DIN84-4,8 M3X16	TOR.CIL.DIN84-4.8 B.TRI.M 3X16	VIS CYL DIN84-4,8 BICR.M3X16
63	276907	MICROSWITCH ACTIVATOR BOLT	PERNO ACCIONADOR MICRORRUPTOR	BOULON ACCIONATEUR MICRORRUPT.
64	198069	SPRING	MUELLE COMPENSADOR	RESSORT
65	149922	INOX HEX. NUT DIN 934 M-4	TUER.EX.DIN934 INOX A2-70 M 4	ECROU HEX. INOX DIN 934 M-4
66	276873	MICROSWITCH DRIVE	ACCIONADOR MICRORRUPTOR	ACTIONNEMENT MICRORRUPTEUR
67	276840	GUIDE SLEEVE	CASQUILLO GUIA	FRETTE GUIDE
68	439430	PROTECTION COVER	TAPA PROTECCION	COUVERCLE PROTECTION
69	326116	SCREW 410TT85T 4X10 INOX	TORNILLO 410TT85T 4X10 INOX (ESPECIAL)	VIS 410TT85T 4X10 INOX
70	149328	INOX A2 WASHER DIN 125 4,3	ARAN. DIN125 INOX A2 4,3	RONDELLE INOX A2 DIN 125 4,3
71	145649	INOX FLAT SCREW DIN85 M 4X10	TOR.PLA.DIN85 INOX A2-70 M4X10	VIS PLAT INOX DIN85 M-4X10 A2
72	276931	WIRE PROTECTION HOSE	TUBO PROTECCION CABLES	TUBE PROTECTION CABLES
73	200212	DOOR END-PIECE	TOPE ESCOTILLA	ARRET HUBLOT
74	206664	DOOR RING	ARO ESCOTILLA	BAGUE HUBLOT
	206656	(COMPLETE) DOOR	ESCOTILLA COMPLETA	HUBLOT (COMPLET)
75	185751	VITRE D645+-1,5X5	MIRILLA CRISTAL D645+-1,5X5 *	GLASS SPYHOLE D645+-1,5X5
76	197889	PROFILE A EPDM TERPOL-68/COL.	PERFIL A EPDM TERPOL-68/COL.	A EPDM TERPOL-68/COL. PROFILE
77	206672	OUTER RING	ARO EXTERIOR	BAGUE EXTERIEUR

info@zipnasklade.ru
8(800)500-69-51

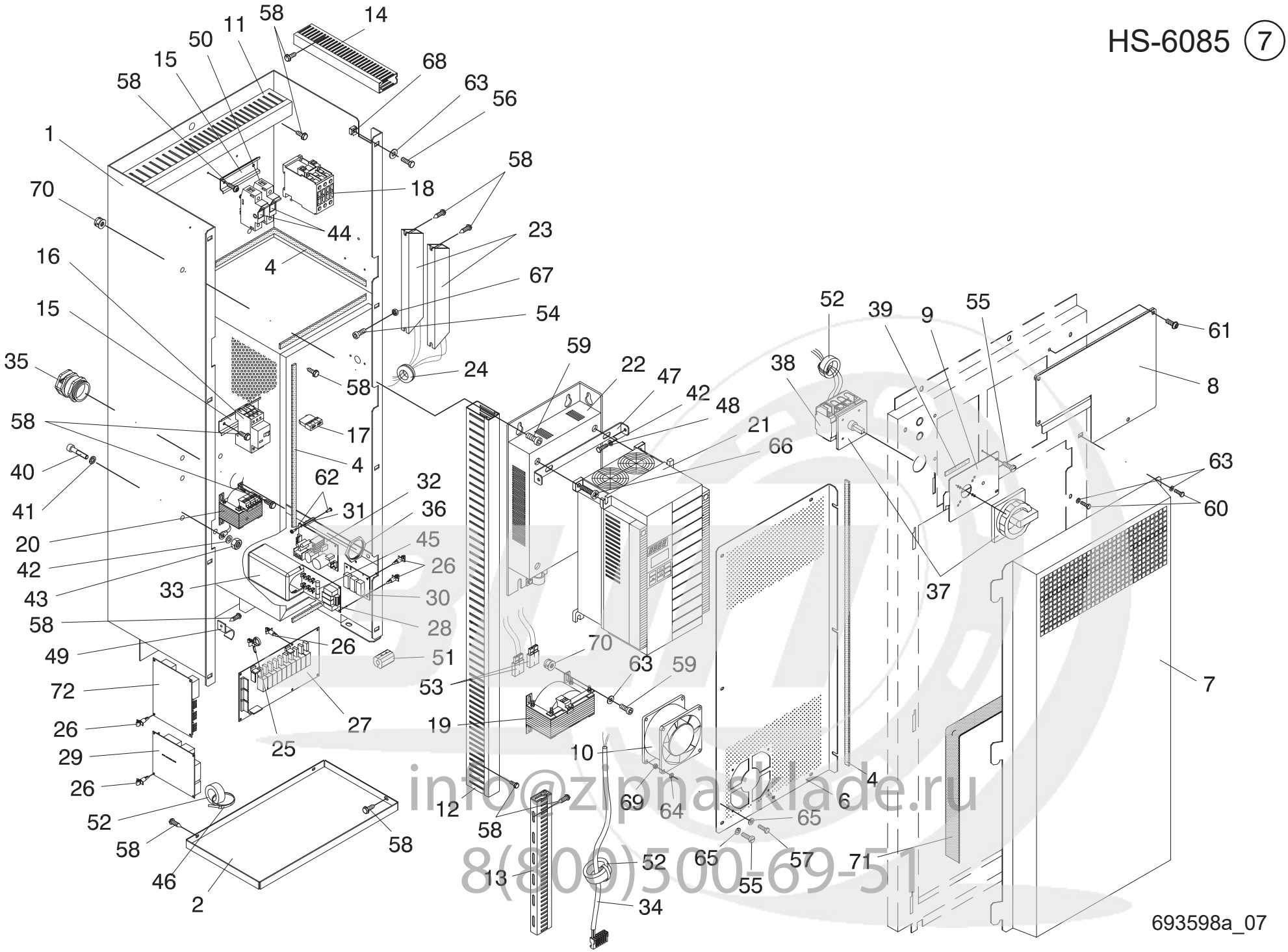

info@zipnasklade.ru
8(800)500-69-51

Nº	REF	DENOMINATION	DENOMINACIÓN	DENOMINATION
1	455725	INVERTER INSTALLATION PLATE	PLACA INSTALACION CONVERTIDOR	PLAQUE INSTALLATION CONVERTISSEUR
2	455691	LOWER CEM COVER	TAPA CEM INFERIOR	COUVERCLE CEM INFERIEUR
3	455493	CEM BOVER OUTERDRUM	ENVOLVENTE CAJA CEM	CUVE BOITE CEM
4	321273	PROFILE E0813T00000 UL94HB (1 METER)	PERFIL E0813R00000 UL94HB (1 METRO)	PROFILE E0813T00000 UL94HB (1 METRE)
5	321273	PROFILE E0813T00000 UL94HB (1 METER)	PERFIL E0813R00000 UL94HB (1 METRO)	PROFILE E0813T00000 UL94HB (1 METRE)
6	455428	CEM COVER	TAPA CEM	COUVERCLE CEM
7	455279	AIR CONDUCTION COVER (PROFILE INCLUDED)	TAPA CONDUCCION AIRE (INCLUYE PERFIL)	COUVERCLE CONDUCTION AIR (COMPRIS PROFILE)
8	455659	POWER INLET COVER (PROFILE INCLUDED)	TAPA ENTRADA CORRIENTE (INCLUYE PERFIL)	COUVERCLE ENTREE COURANT (COMPRIS PROFILE)
9	431114	SELECTOR COVER	TAPA SELECTOR	COUVERCLE SELECTEUR
10	147884	FAN 120X120C38 220-240V	VENTILADOR 120X120X38 220-240*	VENTILATEUR 120X120C38 220-240
11	506584	WIRE-STOP DUCT	CANAL PASACABLES	CHANEL PASSECABLES
12	506592	WIRE-STOP DUCT	CANAL PASACABLES	CHANEL PASSECABLES
13	506360	WIRE-STOP DUCT	CANAL PASACABLES	CANAL PASSECABLES
14	506576	WIRE-STOP DUCT	CANAL PASACABLES	CHANEL PASSECABLES
15	424697	CONTACTOR FIXING PROFILE	PERFIL FIJACION CONTACTORES	PROFILE FIXATION CONTACTEURS
16	326322	AUT.SWITCH 3RV10 11-0DA1.0 (FOR 380V-400V-415V-440V-480V) (FOR (440÷480)V)	INTERRUPT.AUT.3RV10 11-0DA1.0 (PARA 380V-400V-415V-440V-480V) (PARA (440÷480)V)	INTERRUPTEUR AUT.3RV10 11-0DA1 (POUR 380V-400V-415V-440V-480V) (POUR (440÷480)V)
	326330	AUT.SWITCH 3RV10 11-0FA1.0 (FOR 200V-208V-220V-230V-240V) (FOR (208÷240)V)	INTERRUPT.AUT.3RV10 11-0FA1.0 (PARA 200V-208V-220V-230V-240V) (PARA (208÷240)V)	INTERRUPTEUR AUT.3RV10 11-0FA1 (POUR 200V-208V-220V-230V-240V) (POUR (208÷240)V)
17	326306	AUXILIARY CONTACT 3RV19 01-1E	CONTACTO AUXILIAR 3RV19 01-1E	CONTACT AUXILIARE 3RV19 01-1E
18	326348	CONTACTOR 3RT10 36-1AL2	CONTACTOR 3RT10 36-1AL200	CONTACTEUR 3RT10 36-1AL2
19	318451	INDUCTANCE DCR004 (FOR 380V-400V-415V-440V-480V) (FOR (440÷480)V)	INDUCTANCIA DCR004 CSA * (PARA 380V-400V-415V-440V-480V) (PARA (440÷480)V)	INDUCTANCE DCR004 (POUR 380V-400V-415V-440V-480V) (POUR (440÷480)V)
	326090	INDUCTANCE DCR006 (FOR 200V-208V-220V-230V-240V) (FOR (208÷240)V)	INDUCTANCIA DCR006 CSA * (PARA 200V-208V-220V-230V-240V) (PARA (208÷240)V)	INDUCTANCE DCR006 (POUR 200V-208V-220V-230V-240V) (POUR (208÷240)V)

info@zipnasklade.ru
8(800)500-69-51

Nº	REF	DENOMINATION	DENOMINACIÓN	DENOMINATION
20	320218	TRANSFORMER IP 100 VA (FOR 380V-400V-415V-440V-480V) (FOR (440÷480)V)	TRANSFORMADOR IP00 100VA CSA * (PARA 380V-400V-415V-440V-480V) (PARA (440÷480)V)	TRANSFORMATEUR IP00 100 VA (POUR 380V-400V-415V-440V-480V) (POUR (440÷480)V)
	320614	TRANSFORMER IP00 100 VA CSA (FOR 200V-208V-220V-230V-240V) (FOR (208÷240)V)	TRANSFORMADOR IP00 100 VA CSA* (PARA 200V-208V-220V-230V-240V) (PARA (208÷240)V)	TRANSFORMATEUR IP00 100 VA CSA (POUR 200V-208V-220V-230V-240V) (POUR (208÷240)V)
21	365122	INVERTER FRN FRN 22 G1E-4E (FOR 380V-400V-415V-440V-480V) (FOR (440÷480)V)	CONVERTIDOR FRN 22 G1E-4E * (PARA 380V-400V-415V-440V-480V) (PARA (440÷480)V)	CONVERTISSEUR FRN 22 G1E-4E (POUR 380V-400V-415V-440V-480V) (POUR (440÷480)V)
	365114	INVERTER FRN 22 G1S-2J (FOR 200V-208V-220V-230V-240V) (FOR (208÷240)V)	CONVERTIDOR FRN 22 G1S-2J * (PARA 200V-208V-220V-230V-240V) (PARA (208÷240)V)	CONVERTISSEUR FRN 22 G1S-2J (POUR 200V-208V-220V-230V-240V) (POUR (208÷240)V)
22	318444	FILTER TYPE FS5536-72-07	FILTRO TIPO FS5536-72-07	FILTRE TYPE FS5536-72-07
23	456681	RESISTENCIA FRENO 100W 40OHM (FOR 200V-208V-220V-230V-240V) (FOR (208÷240)V)	RESISTENCIA FRENO 100W 40OHM (PARA 200V-208V-220V-230V-240V) (PARA (208÷240)V)	RESISTENCIA FRENO 100W 40OHM (POUR 200V-208V-220V-230V-240V) (POUR (208÷240)V)
	456699	BRAKING RESISTANCE 100W 160OHM (FOR 380V-400V-415V-440V-480V) (FOR (440÷480)V)	RESISTENCIA FRENO 100W 160OHM (PARA 380V-400V-415V-440V-480V) (PARA (440÷480)V)	RESISTENCE FREIN 100W 160OHM (POUR 380V-400V-415V-440V-480V) (POUR (440÷480)V)
24	332601	SHEATH-LODGING DGB-7	PASAMUROS DGB-7	LOGEMENT DGB-7
25	326132	CABLE TIE Ø35 NATURAL	ABRAZADERA Ø35 NATURAL	BRIDE Ø35 NATUREL
26	332809	CIRCUIT BRACKET LCBS-4-7-01	SOPORTE CIRCUITO LCBS-4-7-01	SUPPORT CIRCUIT LCBS-4-7-01
27	353326	INTELI LABEL E/S-1/D	PLACA INTELI E/S-1/D	PLAQUE INTELI E/S-1/D
28	332395	AUXILIARY BOARD HS-60**	PLACA AUXILIAR HS-60**	PLAQUE AUXILIAIRE HS-60**
29	332544	INTELI BOARD E/S-2/A	PLACA INTELI E/S-2/A	PLAQUE INTELI E/S-2/4
30	504787	ADAPTER PLATE AC-DC/A	PLACA ADAPTADOR AC-DC/A	PLAQUE ADAPTEUR AC-DC/A
31	322685	SEPARATOR HEX.HS6-8	SEPARADOR EXAGONAL HS6-8	SEPARATEUR HEX. HS6-8
32	332718	POWER SOURCE MW PS-25-12	FUENTE ALIMENT.MW PS-25-12	FONT ALIMENT.MW PS-25-12
33	326843	MICROPROCESSOR PLATE COVER	TAPA PLACA MICROPROCESADOR	COUVERCLE PLAQUE MICROPROSSEUR
34	506006	ELEC. INST. RS-485	INST. ELEC. RS-485	INST. ELEC. RS-485
35	326462	STUFFING-BOX EXADIN CLAMP PG29 BRASS	PRENSAESTOPAS EXADIN PG29 LATON	PRESSE-ETOUPES EXADIN BRIDE PG29 LAITON
36	140277	COUNTERNUT PG29 BRASS	TUERCA PG29 LATON	CONTREECROU PG29 LAITON
37	344135	IPAQUET SWITCH.3LD2 504-0TK53	INTERRUP.PAQUET.3LD2 504-0TK53	INTERRUP.PAQUET.3LD2 504-0TK53
38	344150	TERMINAL PE 3LD9250-2BA	BORNE PE 3LD9250-2BA	BORNE PE 3LD9250-2BA

info@zipnasklade.ru
8(800)500-69-51

Nº	REF	DENOMINATION	DENOMINACIÓN	DENOMINATION
39	321265	CONNECTION TERMINAL PLATE	PLACA BORNES CONEXION	PLAQUE BORNE CONNECTION
40	144295	BICR.SCREW ALLEN912-8.8 M 5X25	TOR.ALLDIN912-8.8 B.TRI.M 5X25	VIS ALLDIN912-8.8 BICR.M 5X 25
41	149724	BICR EXT.TOOT.WASH.DIN6798 M5	ARAN.DEN.EXT.B.TRI.DIN6798M 5	RONDEL DEN.EX.BICR.DIN6798 M5
42	149534	BICR.WASHER B DIN125-ST 5,3	ARAN.B DIN125-ST BICR. 5,3	RONDELLE B BICR.DIN125-ST 5,3
43	150177	BICR HEX NUT DIN934-8 M5	TUER.EX.DIN934-8 B.TRI.M 5	ECROU HEX DIN934-8 BIC.M5
44	544411	AUTOMATIC SWITCH 0,5A (FOR 380V-400V-415V-440V-480V) (FOR (440÷480)V)	INTERRUPTOR AUT. 0,5A CURVA D* (PARA 380V-400V-415V-440V-480V) (PARA (440÷480)V)	INTERRUPTEUR AUT.0,5A (POUR 380V-400V-415V-440V-480V) (POUR (440÷480)V)
	518167	AUTOMATIC SWITCH 1A (FOR 200V-208V-220V-230V-240V) (FOR (208÷240)V)	INTERRUPTOR AUT. 1A CURVA D* (PARA 200V-208V-220V-230V-240V) (PARA (208÷240)V)	INTERRUPTEUR AUT.1A (POUR 200V-208V-220V-230V-240V) (POUR (208÷240)V)
45	319152	FUSE SPT 0001.2521 0,5A	CART.FUSIB.SPT 0001.2521 0,5A*	CARTOUCHE FUSIBLE SPT
46	140434	CLAMP 2221	BRIDA UNEX 2221 *	BRIDE 2221
47	506428	FILTER-INVERTER BRACKET	SOPORTE FILTRO-CONVERTIDOR	SUPPORT FILTRE-CONVERTISSEUR
48	146282	BICR.HEX SCREW DIN933-8 M 5X15	TOR.EX.DIN933-8.8 B.TRI.M 5X15	VIS HEX BICR.DIN933-8.8 M 5X15
49	197319	FIXING CLAMP 1X15 DIN 72571	ABRAZ.FIJACION 1X15 DIN 72571	BRIDE FIXATION 1X15 DIN 72571
51	321182	FERRITE SPLIT GRFC-13	FERRITA SPLIT GRFC-13	FERRITE SPLIT GRFC-13
52	508317	FERRITE 40X24 *	FERRITA 40X24 *	FERRITE 40X24 *
53	456715	BRAKE RESISTANCE WIRES	CABLES RESISTENCIA FRENO	CÂBLES RÉSISTANCE FREIN
54	191254	ALLEN SCREW DIN 912 M 4X 15	TOR.ALLDIN912-8.8 B.TRI.M 4X15	VIS ALLEN DIN 912 M 4X 15
55	146084	BICR CYL SCREW DIN84 M 4X 10	TOR.CIL.DIN84-4.8 B.TRI.M 4X10	VIS CYL BICR DIN84-4.8 M 4X 10
56	146233	BICR.HEX SCREW DIN933-8 M6X15	TOR.EX.DIN933-8.8 B.TRI.M 6X15	VIS HEX DIN933-8.8 BICR.M6X15
57	146266	BICR.HEX SCREW DIN933-8 M-4X15	TOR.EX.DIN933-4.8 B.TRI.M 4X15	VIS HEX BICR.DIN933-8.8 M-4X15
58	183400	PLATE SCREW ST-4, 20 P.F. C/AL.T25	TORNILLO CHAPA ST-4 (ESPECIAL)*	VIS PLAQUE ST-4, 20 P.F. C/AL.T25
59	144337	ALLEN SCREW DIN912 M 6X15	TOR.ALLDIN912-8.8 B.TRI.M 6X15	VIS ALLEN DIN912 M 6X15
60	146233	BICR.HEX SCREW DIN933-8 M6X15	TOR.EX.DIN933-8.8 B.TRI.M 6X15	VIS HEX DIN933-8.8 BICR.M6X15
61	328229	SCREW ALO.T25 AR.18ESTR.M 4X10	TORNILLO ALOM.T25 M 4X10 (ESPECIAL)*	VIS ALOM.T25 AR.18ESTR.M 4X10
62	322693	SCREW PT KN35X10 WN1412	TORNILLO PT KN35X10 WN1412 (ESPECIAL)	VIS PT KN35X10 WN1412
63	149526	BICR.WASHER B DIN125-ST 6,4	ARAN.B DIN125-ST B.TRI. 6,4	RONDELLE B DIN125-ST BICR.6,4
64	279901	SEPARATOR WASHER	ARANDELA 13X6.25X 2 NYLON	RONDELLE SEPARATEUR

info@zipnasklade.ru
8(800)500-69-51

Nº	REF	DENOMINATION	DENOMINACIÓN	DENOMINATION
65	149476	BICR.WASHER B DIN125-ST 4,3	ARAN.B DIN125-ST B.TRI. 4,3	RONDELLE B DIN125-ST BICR.4,3
66	144394	ALLEN SCREW DIN 912 8,8 M8x20 TRIVALENT	TORNILLO ALLEN DIN 912 8,8 M8x20 TRIVALE	VIS ALLEN DIN 912 8,8 M8x20 TRIVALENT
67	149922	INOX HEX. NUT DIN 934 M-4	TUER.EX.DIN934 INOX A2-70 M 4	ECROU HEX. INOX DIN 934 M-4
68	321117	NUT ENJ.M6 1,6-2,5 R.310008-7	TUER.ENJ.M6 1,6-2,5 R.310008-7	ECROU ENJ.M6 1,6-2.5 R310008-7
69	132043	SELF-LOCKING NUT DIN985-8 B.TRI.M 4	TUER.AUTOBL.DIN985-8 B.TRI.M 4	ECROU AUTOBLOCANT DIN985-8 B.TRI.M 4
70	128934	CYLINDRICAL CAGED NUT M-6	TUER.ENJ.M6 CILINDR.R-310078-1	ECROU ENCAGE CYLINDRIQUE M-6
71	411108	PROFILE	PERFIL OBTURADOR	PROFILE
72	456509	INTELI BOARD E/S-3/A (TILT) (WITH TILTING)	PLACA INTELI E/S-3/A (TILT) (CON VOLQUETE)	PLAQUE INTELI E/S-3/A (TILT) (AVEC SOCLE BASCULANT)

info@zipnasklade.ru
8(800)500-69-51

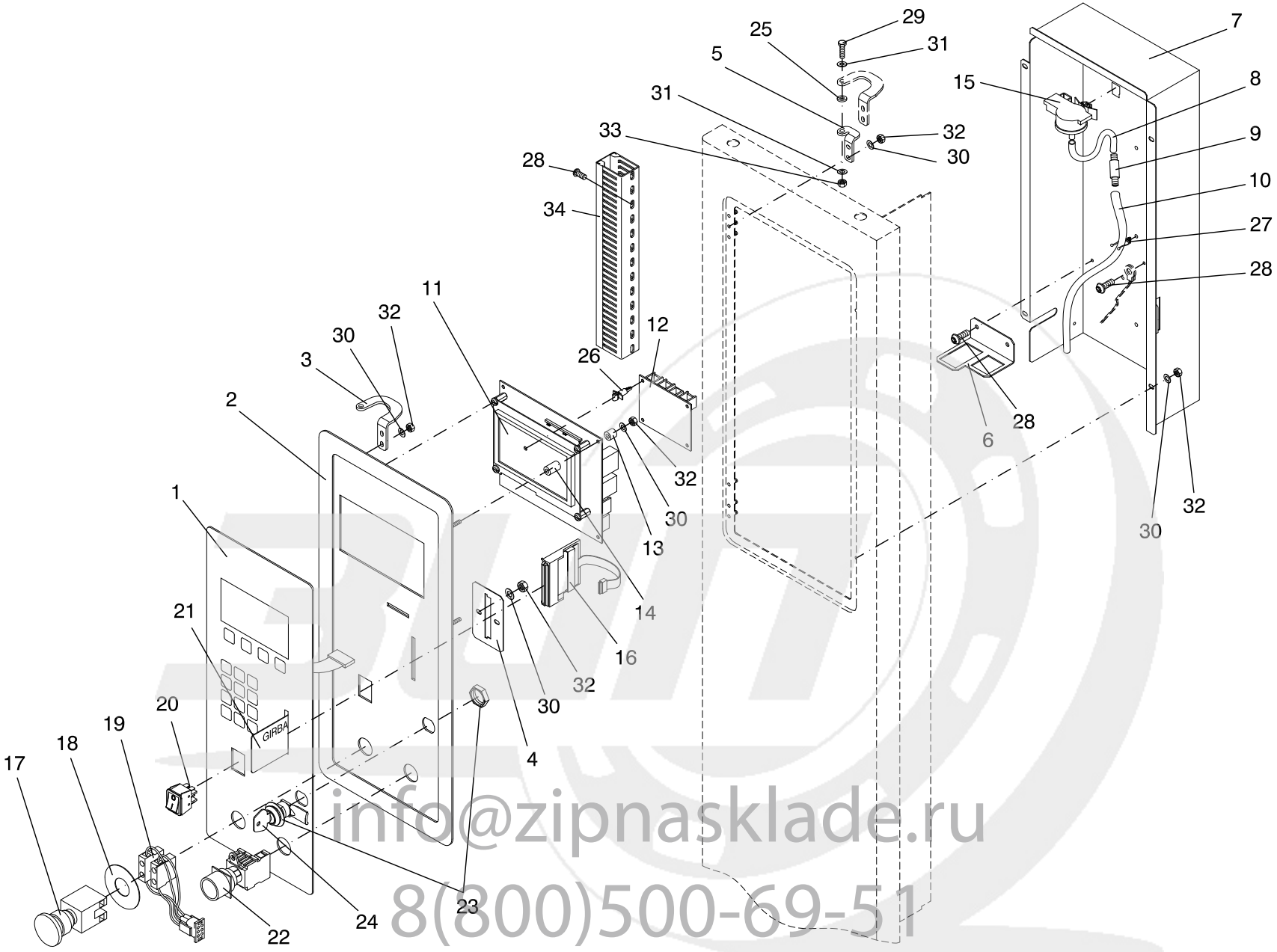

info@zipnasklade.ru
8(800)500-69-51

Nº	REF	DENOMINATION	DENOMINACIÓN	DENOMINATION
1	632612	KEYBOARD IC	TECLADO LAVADORA IC	CLAVIER IC
	632604	KEYBOARD IC (WITH TILTING)	TECLADO LAVADORA IC (CON VOLQUETE)	CLAVIER IC (AVEC SOCLE BASCULANT)
2	632653	SIDE CONTROL PANEL	PANEL DE MANDOS LATERAL	PANNEAU DE COMMANDES LATERAL
3	353797	HINGE CONTROL PANEL	BISAGRA PANEL DE MANDOS LAT.	CHARNIERE TABLEAU COMMANDE
4	423020	CARD FIXING-PIECE SMARTCARD	FIJACION TARJETA SMARTCARD	FIXATION TARGETTE SMARTCARD
5	349993	CONTROL PANEL HINGE	BISAGRA PANEL DE MANDOS	CHARNIERE TABLEAU COMMANDE
6	286823	CONNECTOR BRACKET	SOPORTE CONECTORAS	SUPPORT CONNECTEURS
7	447136	CONTROL PANEL BOX	CAJA PANEL DE MANDOS	BOITE PANNEAU DE COMMANDES
8	279588	AIR CONDUCTION HOSE	TUBO CONDUCCION AIRE	TUBE CONDUITE AIR
9	120956	LEVEL PRESSURE-SWITCH INTAKE	TOMA PRESOSTATO NIVEL	PRISE PRESSOSTAT NIVEAU
10	283523	PRESSOSTAT HOSE	TUBO PRESOSTATO	TUBE PRESSOSTAT
11	506808	SCREEN KIT LCD IC	CONJUNTO PANTALLA LCD IC	ENSEMBLE ÉCRAN LCD IC
12	343616	COM-B COMMUNICATIONS BOARD (WITH COM)	PLACA COMUNICACIONES COM-B * (PARA COM)	PLAQUE COMMUNICATIONS COM-B (AVEC COM)
13	322768	MICRO BOARD SEPARATOR	SEPARADOR PLACA MICRO	SEPARATEUR PLAQUE MICRO
14	338038	MICRO BOARD SPACER	SEPARADOR PLACA MICRO	SEPARATEUR PLAQUE MICRO
15	322784	PRESSURE TRANSMITTER 400.95100	TRANSM.PRESION HUBA 400.95100	PRESSOSTAT HUBA 400.95100
16	332684	INTELI SMARTCARD SOCKET	ZOCALO TARJETA INTELI *	SOCLE TARGETTE SMARTCARD INTEL
17	341511	EMERGENCY STOP IC	PARO EMERGENCIA IC	ARRET EMERGENCE IC
18	192294	YELLOW RING	ARO AMARILLO	BAGUE JAUNE
19	447094	EMERGENCY STOP PLUG	CONECTORA PARO EMERGENCIA	CONNECTEUR ARRET EMERGENCE
20	587519	SWITCH C1550AL	INTERRUPTOR C1550AL	INTERRUPTEUR C1550AL
21	340539	INTELI SMARTCARD CARD	TARJETA SMARTCARD INTELI	CARTE SMARTCARD INTELI
22	510677	TILT PUSH-BUTTON/HELP SERIAL-6 (WITH TILTING)	PULSADOR TILT/HELP SERIE-6 (CON VOLQUETE)	BOUTON-POUSSOIR TILT/HELP SERIE-6 (AVEC SOCLE BASCULANT)
23	196915	LOCK RE.20.00.02.05	CERRADURA REF.20.00.02.05 *	FERMETURE REF.20.00.02.05
24	196923	LOCK KEY RE.10.41.213	LLAVE REF.10.41.213 COMB.T-205	CLE FERMETURE REF.10.41.213
25	279901	SEPARATOR WASHER	ARANDELA 13X6.25X 2 NYLON	RONDELLE SEPARATEUR
26	332809	CIRCUIT BRACKET LCBS-4-7-01	SOPORTE CIRCUITO LCBS-4-7-01	SUPPORT CIRCUIT LCBS-4-7-01

info@zipnasklade.ru
8(800)500-69-51

Nº	REF	DENOMINATION	DENOMINACIÓN	DENOMINATION
27	199893	CLAMP STL-450-3-01	ABRAZADERA STL-450-3-01	BRIDE STL-450-3-01
28	183400	PLATE SCREW ST-4, 20 P.F. C/AL.T25	TORNILLO CHAPA ST-4 (ESPECIAL)*	VIS PLAQUE ST-4, 20 P.F. C/AL.T25
29	146290	BICR.HEX SCREW DIN933-8 M-5X20	TOR.EX.DIN933-8.8 B.TRI.M 5X20	VIS HEX BICR.DIN933-8.8 M-5X20
30	149476	BICR.WASHER B DIN125-ST 4,3	ARAN.B DIN125-ST B.TRI. 4,3	RONDELLE B DIN125-ST BICR.4,3
31	149534	BICR.WASHER B DIN125-ST 5,3	ARAN.B DIN125-ST BICR. 5,3	RONDELLE B BICR.DIN125-ST 5,3
32	150185	BICR.HEX.NUT DIN934-8 M4	TUER.EX.DIN934-8 B.TRI.M 4	ECROU HEX.DIN934-8 BICR.M4
33	176826	SELF-LOCKING NUT DIN985-8 B.TRI.M5	TUER.AUTOBL.DIN985-8 B.TRI.M5	ECROU AUTOBLOCANT DIN 985-8 B.TRI.M5
34	453639	WIRETHROUGH CHANNEL	CANAL PASACABLES	CANAL PASSECABLES

info@zipnasklade.ru
8(800)500-69-51

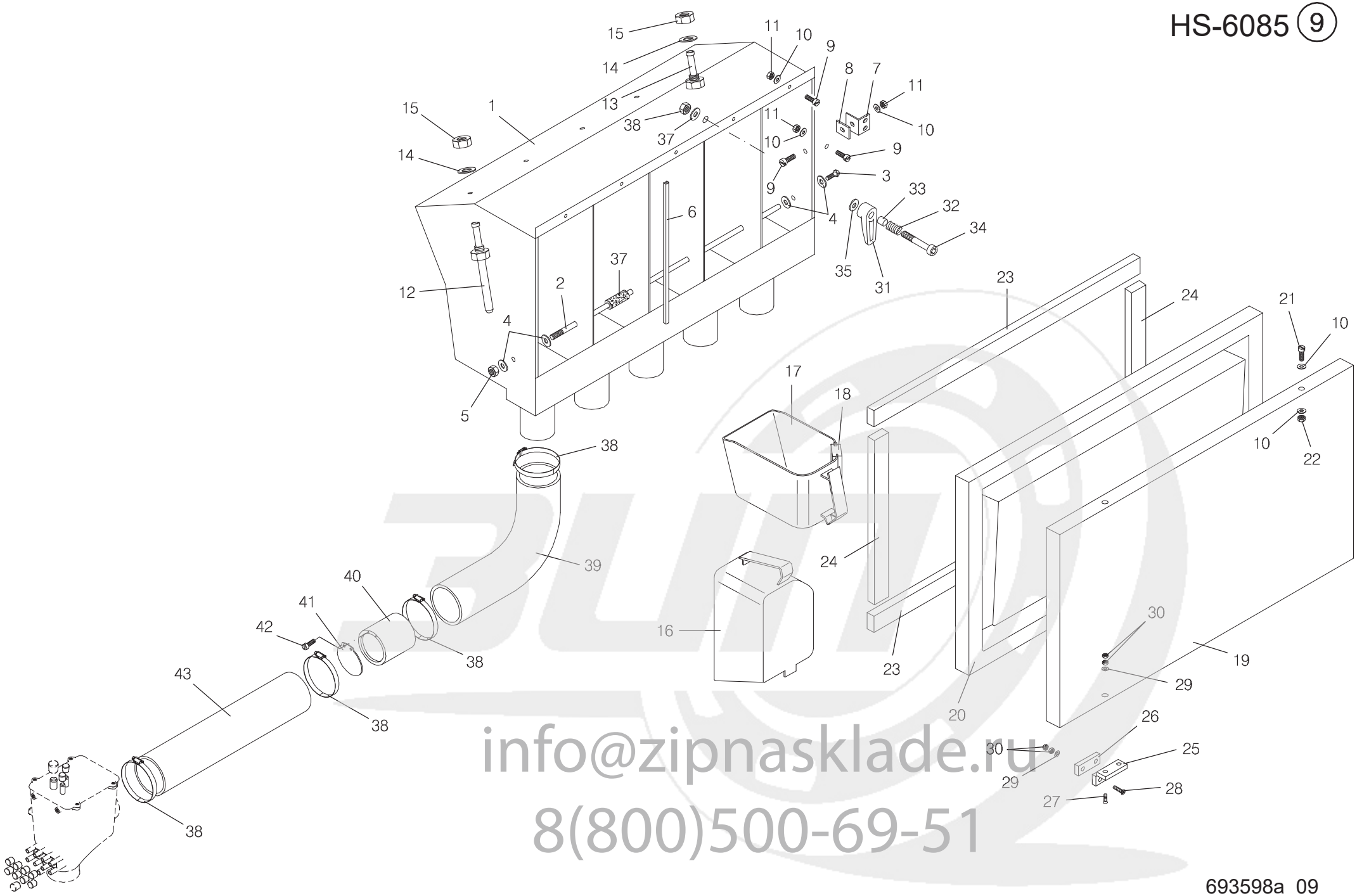

info@zipnasklade.ru
8(800)500-69-51

Nº	REF	DENOMINATION	DENOMINACIÓN	DENOMINATION
1	255539	SOAP DISPENSER SET (PIN AND PROFILES INCLUDES)	CONJUNTO DOSIFICADORES (INCLUYE VARILLA Y PERFILES)	ENSEMBLE BACS A PRODUITS BAGUETTEE ET PROFILES COMPRIS
2	255554	SOAP DISPENSER BAR	VARILLA DOSIFICADOR	BAGUETTE BAC A PRODUITS
3	144782	INOX HEX SCREW DIN933 M 5X15	TOR.EX.DIN933INOX A2-70 M 5X15	VIS HEX INOX DIN933 M 5X15
4	160838	WASHER 14X6X1,5	ARANDELA 14X6X1.5 INOX	RONDELLE 14X6X1,5
5	176826	SELF-LOCKING NUT DIN985-8 B.TRI.M5	TUER.AUTOBL.DIN985-8 B.TRI.M5	ECROU AUTOBLOCANT DIN 985-8 B.TRI.M5
6	255547	SOAP DISPENSER PROFILE	PERFIL DOSIFICADOR	PROFILE BACS A PRODUITS
7	256370	SOAP DISPENSER FIXING	FIJACION DOSIFICADOR	FIXATION BAC A PRODUITS
8	256446	SOAP DISPENSER BRACKET PIECE	PIEZA SOPORTE DOSIFICADOR	PIECE SUPPORT BAC A PRODUITS
9	145631	INOX FLAT SCREW DIN85 A2-70 M4X16	TOR.PLA.DIN85 INOX A2-70 M4X16	VIS PLAT INOX DIN85 A2-70 M4X16
10	149328	INOX A2 WASHER DIN 125 4,3	ARAN. DIN125 INOX A2 4,3	RONDELLE INOX A2 DIN 125 4,3
11	176792	SELF-LOCKING NUT DIN985 INOX M 4	TUER.AUTOBL.DIN985 INOX M 4*	ECROU AUTOBLOCANT DIN985 INOX M 4
12	244467	DISPENSER HOSE	TUBO DOSIFICADOR	TUBE BAC A PRODUITS
13	242883	DISPENSER HOSE COUPLING	RACOR TUBO DOSIFICADOR	RACCORD TUBE BAC A PRODUITS
14	149393	WASHER DIN 125B M14 ST TRIVALENT	ARANDELA DIN 125B M14 ST TRIVALENTE	RONDELLE DIN 125B M14 ST TRIVALENT
15	150250	BICR HEX.NUT DIN 934-8 M 14	TUER.EX.DIN934-8 B.TRI.M14	ECROU HEX.BICR DIN 934-8 M 14
16	244806	SOLID SOAP DISPENSER	DOSIFICADOR DETERGENTE SOLIDO	BAC A PRODUIT DETERGENT SOLIDE
17	244855	LIQUID SOAP DISPENSER (HOSE INCLUDED)	DOSIFICADOR DETERGENTE LIQUIDO (INCLUYE TUBO)	BAC A PRODUIT DETERG.LIQUIDE (TUBE COMPRIS)
18	234930	CHLORINE INTAKE HOSE	TUBO ASPIRACION CLORO	TUBE ASPIRATION CHLORE
19	240291	SOAP DISPENSER LID (INOX)	TAPA DOSIFICADORES (INOX)	COUVERCLE BAC A PRODUITS (INOX)
	446898	SOAP DISPENSER LID (PRE-COATED)	TAPA DOSIFICADDORES (PRE-COATED)	COUVERCLE BAC A PRODUITS (PRE-COATED)
20	199992	SOAP DISPENSER COUNTERLID	CONTRATAPA DOSIFICADORES	CONTRECOUVERCLE BAC A PRODUITS
21	145649	INOX FLAT SCREW DIN85 M 4X10	TOR.PLA.DIN85 INOX A2-70 M4X10	VIS PLAT INOX DIN85 M-4X10 A2
22	149922	INOX HEX. NUT DIN 934 M-4	TUER.EX.DIN934 INOX A2-70 M 4	ECROU HEX. INOX DIN 934 M-4
23	359018	SOAP DISPENSER COVER GASKET	JUNTA TAPA DOSIFICADORES	JOINT COUVERCLE BAC A PRODUITS
24	357855	SOAP DISPENSER COVER GASKET	JUNTA TAPA DOSIFICADORES	JOINT COUVERCLE BAC A PRODUITS
25	176800	HINGE 72-7-3329 CHROMED	BISAGRA PINET 72-7-3329 CROM.	CHARNIERE 72-7-3329 CHROM

info@zipnasklade.ru
8(800)500-69-51

Nº	REF	DENOMINATION	DENOMINACIÓN	DENOMINATION
26	244590	HINGE SUPPLEMENT	SUPLEMENTO BISAGRA	SUPPLEMENT CHARNIERE
27	176784	INOX SCREW DIN 963 M-3X10 A270	TOR.AV.DIN963 INOX A2-70 M3X10	VIS INOX DIN 963 M-3X10 A2-70
28	144758	INOX LENS HEAD S.DIN963 M 3X16	TOR.AV.DIN963 INOX A2-70 M3X16	VIS T/FRAI.INOX DIN963 M 3X16
29	152132	INOX A2 WASHER DIN 125	ARAN. DIN125 INOX A2 3,2	RONDELLE INOX A2 DIN 125 3,2
30	149906	INOX. HEX. NUT DIN 934 M-3	TUER.EX.DIN934 INOX A2-70 M 3	ECROU HEX. INOX DIN934 M-3
31	187393	LOCKING HANDLE	MANECILLA CIERRE	POIGNEE FERMETURE
32	187401	LOCKING HANDLE SPRING	MUELLE MANECILLA CIERRE	RESSORT POIGNEE FERMETURE
33	257469	HANDLE HOSE	TUBO MANECILLA	TUBE POIGNEE
34	144436	ALLEN SCREW DIN 912 8,8 M8x45 TRIVALENT	TORNILLO ALLEN DIN 912 8,8 M8x45 TRIVALE	VIS ALLEN DIN 912 8,8 M8x45 TRIVALENT
35	149351	WASHER DIN 125B M8 INOX A2	ARANDELA DIN 125B M8 INOX A2	RONDELLE DIN 125B M8 INOX A2
36	164285	SELF-LOCKING NUT DIN985-8 B.TRI.M8	TUER.AUTOBL.DIN985-8 B.TRI.M8	ECROU AUTOBLOCANT DIN985-8 B.TRI.M8
37	271924	SOAP DISPENSER ROD PROTECTION	FUNDA VARILLA DOSIFICADOR	FOURREAU BAGUET.BAC À PRODUITS
38	132340	CLAMP REF.30173380-2 D80-100	ABRAZADERA REF.30173380-2 D80-100	BRIDE REF.30173380-2 D80-100
39	163253	DRAIN OUTLET HOSE	TUBO SALIDA DESAGÜE	TUBE SORTIE VIDANGE
40	263962	STOPPER	OBTURADOR	OBTURATEUR
41	263954	STOPPER MEMBRANE	MEMBRANA OBTURADOR	OBTURATEUR MEMBRANE
42	192203	INOX PLATE SCREW DIN7971 4X1/2	TOR.CHAPA INOX.DIN7971 4X1/2"	VIS PLAQUE INOX DIN7971 4X1/2"
43	405357	RUBBER HOSE D73XD83X395	TUBO GOMA D73XD83X395	TUBE GOMME D73XD83X395

info@zipnasklade.ru
8(800)500-69-51

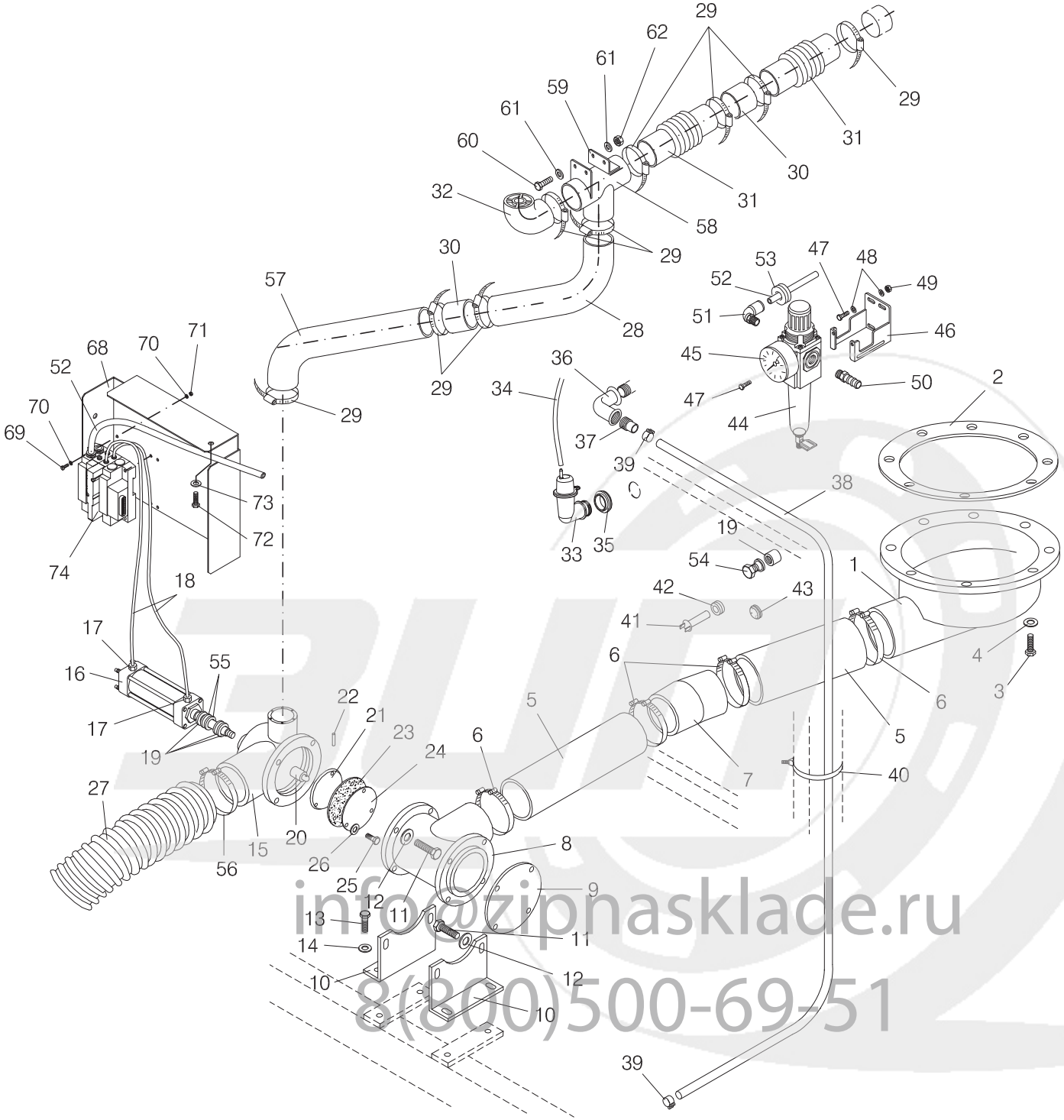

info@zipnasklade.ru
8(800)500-69-51

Nº	REF	DENOMINATION	DENOMINACIÓN	DENOMINATION
1	255976	DRAIN PLATE	PLATINA DESAGÜE	PLATINE VIDANGE
2	255984	PLATE GASKET	JUNTA PLATINA	JOINT PLATINE
3	145037	INOX HEX SCREW DIN 933 M-10X30	TOR.EX.DIN933INOX A2-70 M10X30	VIS HEX INOX DIN 933 M-10X30
4	149500	BICR.WASHER B DIN125-ST 10,5	ARAN.B DIN125-ST B.TRI.10,5	RONDELLE B DIN125-ST BICR.10,5
5	185330	DRAIN HOSE	TUBO DESAGÜE	TUBE VIDANGE
6	196501	CLAMP D140-148	ABRAZADERA 140-148 *	BRIDE D140-148
7	408534	DRAIN HOSE SLEEVE	MANGUITO TUBOS DESAGÜE	FRETTE TUBES VIDANGE
8	255885	DRAIN BODY	CUERPO DESAGÜE	CORPS VIDANGE
9	255877	DRAIN BODY COVER	TAPA CUERPO DESAGÜE	COUVERCLE CORPS VIDANGE
10	256255	DRAIN BRACKET	SOPORTE DESAGÜE	SUPPORT VIDANGE
11	147025	HEX SCREW 8G DIN 933 M-12X30	TOR.EX.DIN933-8.8 B.TRI.M12X30	VIS HEX. 8G DIN933 M-12X30
12	149419	BICR.WASHER B DIN125-ST 13	ARAN.B DIN125-ST B.TRI.13	RONDELLE B DIN125-ST BICR.13
13	146480	BICR.HEX SCREW DIN933-8 M10X20	TOR.EX.DIN933-8.8 B.TRI.M10X20	VIS HEX BICR.DIN933-8 M 10X20
14	149500	BICR.WASHER B DIN125-ST 10,5	ARAN.B DIN125-ST B.TRI.10,5	RONDELLE B DIN125-ST BICR.10,5
15	213496	DRAIN BODY COVER	TAPA CUERPO DESAGÜE	COUVERCLE CORPS VIDANGE
16	186551	PNEUMATIC CYLINDER M-920/75	CILINDRO NEUMATICO CARRERA 75MM	CYLINDRE PNEUMATIQUE M-920/75
	193532	KIT FOR CYLINDER M920	KIT(BOLSA C)PARA CILINDRO M920	KIT POUR CYLINDRE M920
17	186569	CONNECTION RE. 3101.06.13	CONEXION RECTA REF.3101.06.13	CONNEXION REF. 3101.06.13
18	359752	POLYURETANE HOSE D6X4 TU0604BU (1 METER)	TUBO POLIURETANO D6X4 TU0604BU (1 METRO)	TUBE POLYURETANE D6X4 TU0604BU (1 METRE)
19	185165	TEIGHTNESS GASKET TYPE G	JUNTA ESTAN.TIPO G REF.1383300	JOINT ETANCHEITE TYPE G
20	213520	LOCK HEAD	CABEZA DEL CIERRE	TETE DE LA FERMETURE
21	213512	DRAIN LOCK	CIERRE DESAGÜE	FERMETURE VIDANGE
22	216762	DRAIN LOCKING BOLT	PASADOR CIERRE DESAGÜE	GOUJON FERMETURE VIDANGE
23	213538	DRAIN MEMBRANE	MEMBRANA DESAGÜE	MEMBRANE VIDANGE
24	216598	MEMBRANE FIXING DISK	DISCO FIJACION MEMBRANA	DISQUE FIXATION MEMBRANE
25	144964	HEX SCREW DIN 933 A2-70 M8x16	TORNILLO HEXAGONAL DIN 933 A2-70 M8x16	VIS HEXAGONALE DIN 933 A2-70 M8x16
26	149351	WASHER DIN 125B M8 INOX A2	ARANDELA DIN 125B M8 INOX A2	RONDELLE DIN 125B M8 INOX A2
27	257170	DRAIN OUTLET HOSE	TUBO SALIDA DESAGÜE	TUBE SORTIE VIDANGE

info@zipnasklade.ru
8(800)500-69-51

Nº	REF	DENOMINATION	DENOMINACIÓN	DENOMINATION
28	255745	OUTER DRUM COLLECTOR HOSE	TUBO COLECTOR ENVOLVENTE	TUBE COLLECTEUR CUVE
29	132340	CLAMP REF.30173380-2 D80-100	ABRAZADERA REF.30173380-2 D80-100	BRIDE REF.30173380-2 D80-100
30	194217	OBTURATOR HOSE	TUBO OBTURADOR	TUBE OBTURATEUR
31	10356350	VAPOUR OUTLET JOINTING	UNION SALIDA VAHOS	UNION SORTIE VAPEURS
32	300442	EXHAUST ELBOW	CODO SALIDA VAHOS	COUDE SORTIE VAPEURS
33	320382	PRESSURE TRANSMITT INTAKE BODY	CUERPO TOMA PRESOSTATO	CORPS PRISE PRESSOSTAT
34	283556	PRESSOSTAT HOSE	TUBO PRESOSTATO	TUBE PRESSOSTAT
	128199	1 METER RUBBER HOSE D 9X 5	1 METRO TUBO GOMA D 9X 5	1 METRE TUBE GOMME D 9X 5
35	320036	PRESSURE T.BODY SHEATH-LODGING	PASAMUROS CUERPO PRESOSTATO	LOGEMENT CORPS PRESSOSTAT
36	129445	FIG. 90 1/2" GALV.	FIGURA 90 DE 1/2" GALV.	FIG. 90 1/2" GALV.
37	200063	BEARING CASE DRAIN	DESAGUE CAJA COJINETES	VIDANGE BOITE ROULEMENTS
38	10357036	BEARING BOX DRAIN HOSE	TUBO DESAGÜE CAJA COJINETES	TUBE VIDANGE BOITE ROULEMENTS
39	156109	CLAMP 16-27	ABRAZADERA 16- 27 *	BRIDE 16-27
40	140509	BLACK POLYAMIDE CLAMP 7.5X360MM	BRIDA POLIAMIDA NEGRA 7.5X360MM	BRIDE POLYAMIDE NOIR 7.5X360MM
41	193862	NTC RESISTANCE	RESISTENCIA NTC	RESISTANCE NTC
42	256149	SENSOR SHEATH LODGING	PASAMUROS SENSOR	LOGEMENT SENSEUR
43	160101	THERMOSTAT INTAKE STOPPER	TAPON TOMA TERMOSTATO	BOUCHON PRISE THERMOSTAT
44	307371	REG.FILTER B72G-2GK-QT3-RMN	FILTRO/REGUL.B72G-2GK-QT3-RMN	FILTRE/REG.B72G-2GK-QT3-RMN
45	186593	MANOMETER 3-50/10/A	MANOMETRO 3-50/10/A	MANOMETRE 3-50/10/A
46	307389	STD AY-4224-50 BRACKET	SOPORTE STANDARD AY-4224-50	SUPPORT STD AY-4224-50
47	146258	BIC.HEX SCREW DIN933-4.8 M4X10	TOR.EX.DIN933-4.8 B.TRI.M 4X10	VIS HEX DIN933-4.8 BICR.M 4X10
48	149476	BICR.WASHER B DIN125-ST 4,3	ARAN.B DIN125-ST B.TRI. 4,3	RONDELLE B DIN125-ST BICR.4,3
49	150185	BICR.HEX.NUT DIN934-8 M4	TUER.EX.DIN934-8 B.TRI.M 4	ECROU HEX.DIN934-8 BICR.M4
50	186619	SLEEVE 1/4" REF. 1231013	ESPIGA ROSCADA 1/4"REF.1231013	MANCHON 1/4" REF. 1231013
51	186627	ELBOW CONNECTION RE.3109.10.13	CONEXION CODO REF.3109.10.13	CONNEXION COUDE REF.3109.10.13
52	359760	POLYURETANE HOSE D10X6.5 TU1065BU (1 METER)	TUBO POLIURET.D10X6.5 TU1065BU (1 METRO)	TUBE POLYURETANE D10X6.5 TU1065BU (1 METRE)
53	157198	THERMOSTAT SHEATH LODGING	PASAMUROS TERMOSTATO *	LOGEMENT THERMOSTAT

info@zippasklade.ru
8(800)500-69-51

Nº	REF	DENOMINATION	DENOMINACIÓN	DENOMINATION
54	185207	10805 PLUG 1" (FOR MACHINES WITHOUT STEAM)	10805 TAPON 1" (PARA MODELOS SIN VAPOR)	10805 BOUCHON 1" (POUR MACHINES SANS VAPEUR)
55	259606	INOX WASHER 41X34X0,4	ARANDELA 41X34X0.4 INOX	RONDELLE 41X34X0,4 INOX
56	166660	CLAMP 131-139	ABRAZADERA 131-139 *	BRIDE D131-139
57	405027	RUBBER HOSE D73X747X150	CODO GOMA D73X747X150	TUBE GOMME D73X747X150
58	178152	UNION T	TE UNION	T UNION
59	290106	JOINTING T RENFORT	REFUERZO TE UNION	REFORT T UNION
60	146233	BICR.HEX SCREW DIN933-8 M6X15	TOR.EX.DIN933-8.8 B.TRI.M 6X15	VIS HEX DIN933-8.8 BICR.M6X15
61	149526	BICR.WASHER B DIN125-ST 6,4	ARAN.B DIN125-ST B.TRI. 6,4	RONDELLE B DIN125-ST BICR.6,4
62	150227	BICR HEX NUT DIN934-8 M6	TUER.EX.DIN934-8 B.TRI.M 6	ECROU HEX DIN934-8 BICR.M6
68	455709	PNEUMATIC INSTALLATION PLATE	PLACA INSTALACION NEUMATICA	PLAQUE INSTALLATION PNEUMATIQUE
69	146183	BICR CYL SCREW DIN 84 M-4X25	TOR.CIL.DIN84-4.8 B.TRI.M 4X25	VIS CYL BICR DIN 84 M-4X25
70	149476	BICR.WASHER B DIN125-ST 4,3	ARAN.B DIN125-ST B.TRI. 4,3	RONDELLE B DIN125-ST BICR.4,3
71	150185	BICR.HEX.NUT DIN934-8 M4	TUER.EX.DIN934-8 B.TRI.M 4	ECROU HEX.DIN934-8 BICR.M4
72	166652	BIC.HEX SCREW DIN933-8.8 M8X15	TOR.EX.DIN933-8.8 B.TRI.M 8X15	VIS HEX DIN933-8.8 BICR. M8X15
73	149518	BICR.WASHER B DIN125-ST 8,4	ARAN.B DIN125-ST B.TRI. 8,4	RONDELLE.B DIN125-ST BICR.8,4
74	364372	DRAIN PNEUMATIC GROUP	GRUPO NEUMATICO DESAGÜE *	GROUPE PNEUMATIQUE VIDANGE

info@zipnasklade.ru
8(800)500-69-51

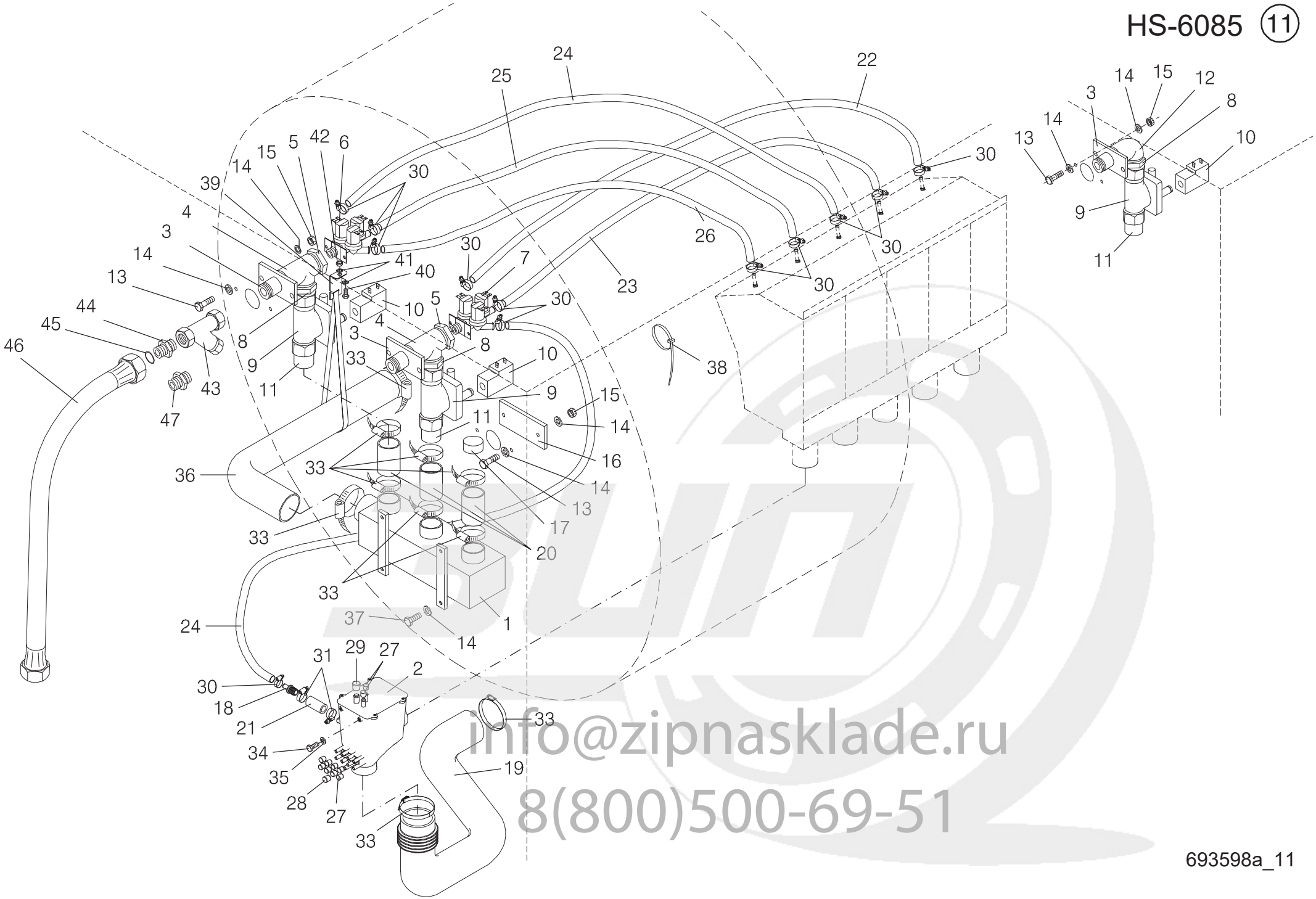

info@zipnasklade.ru
8(800)500-69-51

Nº	REF	DENOMINATION	DENOMINACIÓN	DENOMINATION
1	278184	WATER INLET COLLECTOR	COLECTOR ENTRADA AGUA	COLLECTEUR ENTREE EAU
2	350371	DISTRIBUTOR	DISTRIBUIDOR	DISTRIBUTEUR
3	206037	ELECTROVALVE BRACKET	SOPORTE ELECTROVALVULA	SUPPORT ELECTROVANNE
4	185678	FIG. 130 2"	FIGURA 130 DE 2" GALV.	FIG. 130 2"
5	185660	FIG. 241 2-3/4" GALV.	FIGURA 241 DE 2-3/4" GALV.	FIG. 241 2-3/4" GALV.
6	333674	TRIPLE ELECTROVALVE 369 180º	ELECTROV.TRIPLE 369 180º12VCC*	ELECTROVANNE TRIPLE 369 180º
	300194	YELLOW CASE 30053	ESTUCHE AMARILLO 30053	BOITE JAUNE 30053
	300202	INTEGRAL GUIDE-MEMBRANE 30696	MEMBRANA-GUIA INTEGRAL 30696 *	MEMBRANE-GUIDE INTEGRALE 30696
	332296	COIL 255043000000 12VCC	BOBINA 255043000000 12VCC	BOBINE 255043000000 12VCC
7	447045	THREE TRACK ELECTROVALVE	ELECTROVALVULA TRES VIAS	ELECTROVANNE TROIS VOIES
	156257	REGULATOR 8 L/MIN (RED)	REGULADOR DE 8 L/MIN. (ROJO)	REGULATEUR 8 L/MIN (ROUGE)
	300194	YELLOW CASE 30053	ESTUCHE AMARILLO 30053	BOITE JAUNE 30053
	300202	INTEGRAL GUIDE-MEMBRANE 30696	MEMBRANA-GUIA INTEGRAL 30696 *	MEMBRANE-GUIDE INTEGRALE 30696
	332296	COIL 255043000000 12VCC	BOBINA 255043000000 12VCC	BOBINE 255043000000 12VCC
8	185652	FIG. 280 2"	FIGURA 280 DE 2" GALV.	FIG. 280 2"
9	354027	VAL. BODY EV220A G2 042U4089	CUERPO VAL.EV220A G2 042U4089	CORPS VANNE EV220A G2 04U4089
	513598	SPARE PARTS KIT EV220A G2 042U1041	KIT REPUES. EV220A G2 042U1041	KIT RECHANGES EV220A G2 042U1041
10	333716	COIL AB 5W 12V CC 042N0806	BOBINA AB 5W 12V CC 042N0806	BOBINE AB 5W 12V CC 042N0806
11	205914	SLEEVE	MANGUITO	FRETTE
12	185686	FIG. 90 2" GALV. (FOR 3 INLET MACHINES)	FIGURA 90 DE 2" GALV. (PARA MODELOS 3 ENTRADAS AGUA)	FIG. 90 2" GALV. (POUR MACHINES 3 ENTREES)
13	146399	BICR HEX SCREW DIN933-8 M8X20	TOR.EX.DIN933-8.8 B.TRI.M 8X20	VIS HEX DIN933-8.8 BICR.M8X20
14	149518	BICR.WASHER B DIN125-ST 8,4	ARAN.B DIN125-ST B.TRI. 8,4	RONDELLE.B DIN125-ST BICR.8,4
15	150201	BICR.HEX NUT DIN 934-8 M-8	TUER.EX.DIN934-8 B.TRI.M 8	ECROU HEX.DIN 934-8 BICR.M-8
16	206490	WATER INLET COVER (FOR 2 INLET MACHINES)	TAPA ENTRADA AGUA (PARA MODELOS 2 ENTRADAS AGUA)	COUVERCLE ENTREE EAU (POUR MACHINES 2 ENTREES)
17	255927	PLUG (FOR 2 INLET MACHINES)	TAPON (PARA MODELOS 2 ENTRADAS AGUA)	BOUCHON (POUR MACHINES 2 ENTREES)
18	327825	WATER INLET RACCORD	RACOR ENTRADA AGUA	RACCORD ENTREE EAU
19	357707	DRAIN HOSE	TUBO DESAGÜE	TUBE VIDANGE

info@zipnasklade.ru
8(800)500-69-51

Nº	REF	DENOMINATION	DENOMINACIÓN	DENOMINATION
20	253252	DISPENSER OUTLET HOSE	TUBO SALIDA DOSIFICADOR	TUBE SORTIE BAC A PRODUITS
21	502161	WATER INLET HOSE	TUBO ENTRADA AGUA	TUBE ENTREE EAU
22	455287	WATER INLET HOSE	TUBO ENTRADA AGUA	TUBE ENTREE EAU
	323469	1 METER HOSE PARIGI D10XD16	1 METRO TUBO PARIGI D10XD16	1 METRE TUBE PARIGI D10XD16
23	453704	WATER INLET HOSE	TUBO ENTRADA AGUA	TUBE ENTREE EAU
	323469	1 METER HOSE PARIGI D10XD16	1 METRO TUBO PARIGI D10XD16	1 METRE TUBE PARIGI D10XD16
24	214395	WATER INLET HOSE	TUBO ENTRADA AGUA	TUBE ENTREE EAU
	323469	1 METER HOSE PARIGI D10XD16	1 METRO TUBO PARIGI D10XD16	1 METRE TUBE PARIGI D10XD16
25	432187	WATER INLET HOSE	TUBO ENTRADA AGUA	TUBE ENTREE EAU
	323469	1 METER HOSE PARIGI D10XD16	1 METRO TUBO PARIGI D10XD16	1 METRE TUBE PARIGI D10XD16
26	430934	WATER INLET HOSE	TUBO ENTRADA AGUA	TUBE ENTREE EAU
	323469	1 METER HOSE PARIGI D10XD16	1 METRO TUBO PARIGI D10XD16	1 METRE TUBE PARIGI D10XD16
27	156679	CONICAL END-PIECE R-16 D10	TOPE CONICO REPRIMSA R-16 D10	BOUCHON CONIQUE R-16 D10
28	357624	CONICAL END-PECE R-16 D12	TOPE CONICO REPRIMSA R-16 D12	BOUCHON CONIQUE R-16 D12
29	156687	CONICAL END-PIECE R-16 D16	TOPE CONICO REPRIMSA R-16 D16	ARRET CONIQUE R-16 D16
30	155150	HOSE CLIP ASFA-L W2 8-16	ABRAZADERA ASFA-L W2 8-16	COLLIER ASFA-L W2 8-16
31	156109	CLAMP 16-27	ABRAZADERA 16- 27 *	BRIDE 16-27
32	132290	CLAMP 301730-8 D50-70	ABRAZADERA 301730-8 D50- 70	BRIDE 301730-8 D50-70
33	132340	CLAMP REF.30173380-2 D80-100	ABRAZADERA REF.30173380-2 D80-100	BRIDE REF.30173380-2 D80-100
34	146274	BICR.HEX SCREW DIN933-8 M-5X10	TOR.EX.DIN933-8.8 B.TRI.M 5X10	VIS HEX.BICR.DIN933-8.8 M-5X10
35	149534	BICR.WASHER B DIN125-ST 5,3	ARAN.B DIN125-ST BICR. 5,3	RONDELLE B BICR.DIN125-ST 5,3
36	10356319	OUTER DRUM COLLECTOR HOSE	TUBO COLECTOR ENVOLVENTE	TUBE COLLECTEUR CUVE
37	166652	BIC.HEX SCREW DIN933-8.8 M8X15	TOR.EX.DIN933-8.8 B.TRI.M 8X15	VIS HEX DIN933-8.8 BICR. M8X15
38	140525	CLAMP 2244-0	BRIDA UNEX 2244-0 *	BRIDE 2244-0
39	454694	CLAMP FIXING-PIECE	FIJACION BRIDA	FIXATION BRIDE
40	146233	BICR.HEX SCREW DIN933-8 M6X15	TOR.EX.DIN933-8.8 B.TRI.M 6X15	VIS HEX DIN933-8.8 BICR.M6X15
41	149526	BICR.WASHER B DIN125-ST 6,4	ARAN.B DIN125-ST B.TRI. 6,4	RONDELLE B DIN125-ST BICR.6,4
42	150227	BICR HEX NUT DIN934-8 M6	TUER.EX.DIN934-8 B.TRI.M 6	ECROU HEX DIN934-8 BICR.M6

info@zipnasklade.ru
8(800)500-69-51

Nº	REF	DENOMINATION	DENOMINACIÓN	DENOMINATION
43	185173	BRASS FILTER FLT THREADED 2"	FILTRO LATON FLT ROSC. 2" 0,5	FILTRE LAITON FLT FILETE 2"
44	237404	WATER INLET SLEEVE (EXCEPT FOR USA AND CANADA)	MANGUITO ENTRADA AGUA (EXCEPTO PARA USA Y CANADA)	FRETTE ENTREE EAU (SAUF POUR USA ET CANADA)
45	240382	GASKET D57XD42,5X3 (EXCEPT FOR USA AND CANADA)	JUNTA D57XD42,5X3 (EXCEPTO PARA USA Y CANADA)	JOINT D57XD42,5X3 (SAUF POUR USA ET CANADA)
46	186833	WATER INLET HOSE RACCORDS 2" (EXCEPT FOR USA AND CANADA)	TUBO EPDM 2"X1500 C.RACORES* (EXCEPTO PARA USA Y CANADA)	TUBE ENTREE EAU RACCORDS 2" (SAUF POUR USA ET CANADA)
47	271163	WATER INLET SLEEVE (FOR USA AND CANADA ONLY)	MANGUITO ENTRADA AGUA (SOLO PARA USA Y CANADA)	FRETTE ENTREE EAU (SEULEMENT POUR USA ET CANADA)
		THIRD WATER INLET KITS	KITS TERCERA ENTRADA AGUA	KITS TROISIEME ENTREE EAU
	793620	THIRD WATER INLET KIT	KIT TERCERA ENTRADA AGUA HS-6110	KIT TROISIEME ENTREE EAU

info@zipnasklade.ru
8(800)500-69-51

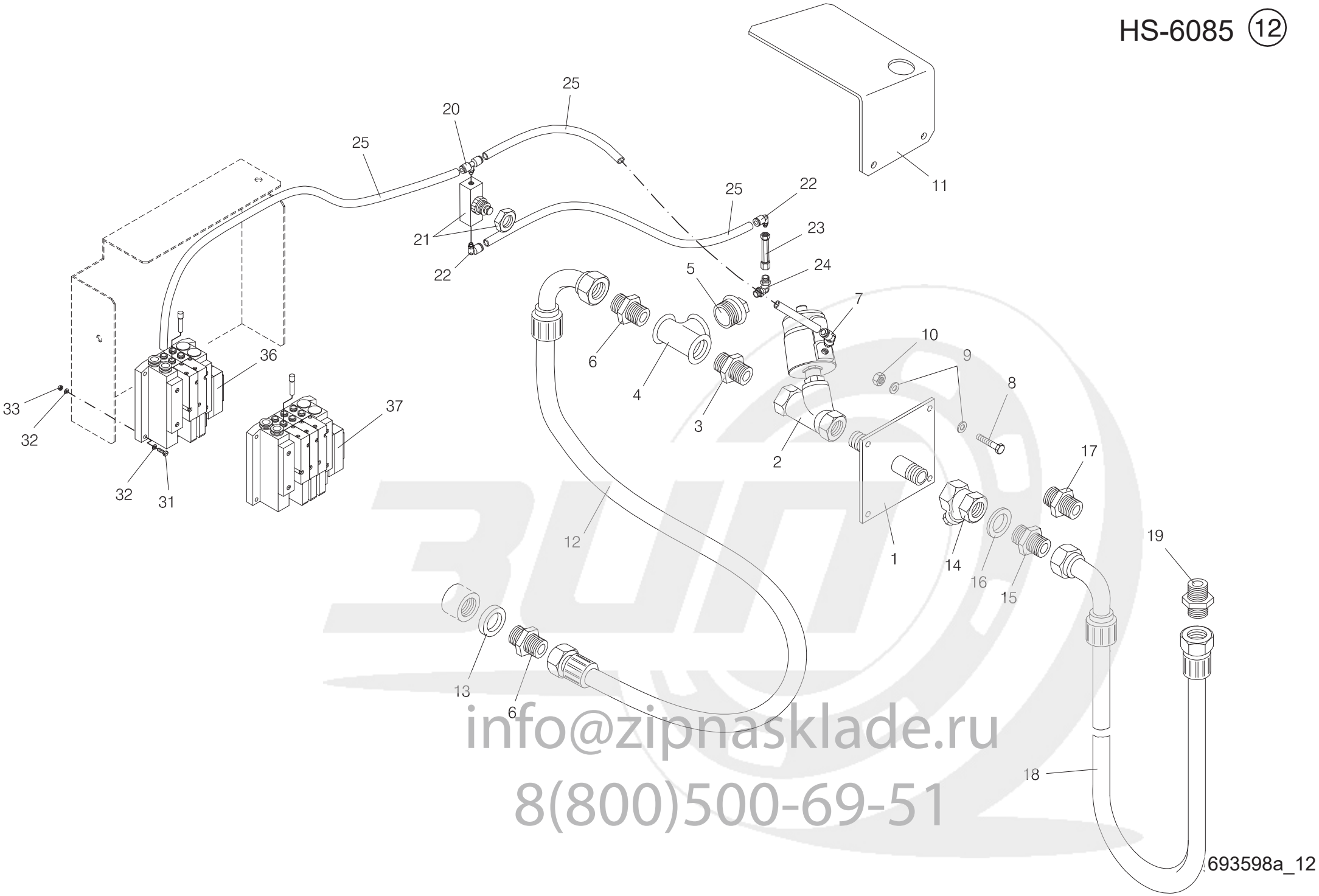

info@zipnasklade.ru
8(800)500-69-51

Nº	REF	DENOMINATION	DENOMINACIÓN	DENOMINATION
		STEAM HEATING KITS	KITS CALEFACCION VAPOR	KITS CHAUFFAGE VAPEUR
	793836	STEAM KIT HS-6110	KIT CAL.VAPOR HS-6110	KIT CHAUF.VAP. HS-6110
	792523	STEAM KIT HS-6110 2D (2 DRAINS)	KIT CAL.VAPOR HS-6110 2D (2 DESAGÜES)	KIT CHAUF.VAP. HS-6110 2D (2 VIDANGES)
	793844	STEAM KIT HS-6110 TILT	KIT CAL.VAPOR HS-6110 TILT	KIT CHAUF.VAP. HS-6110 TILT
	792531	STEAM KIT HS-6110 TILT 2D (2 DRAINS)	KIT CAL.VAPOR HS-6110 TILT 2D (2 DESAGÜES)	KIT CHAUF.VAP. HS-6110 TILT 2D (2 VIDANGES)
1	221093	STEAM INLET BRACKET	SOPORTE ENTRADA VAPOR	SUPPORT ENTREE VAPEUR
2	355982	VALVE GSR AU61072	VÁLVULA VAPOR GSR 2000 F865 *	VANNE GSR AU61072
3	129791	FIG 280 1" GALV	FIGURA 280 DE 1" GALV.	FIG 280 1" GALV
4	129577	FIG. 130 1" GALV.	FIGURA 130 DE 1" GALV.	FIG. 130 1" GALV.
5	219147	AIR INTAKE PLUG	TAPON TOMA AIRE	BOUCHON PRISE AIR
6	185199	JOINTING SCREW 1"	10905 TORNILLO UNION MM1"	VIS UNION 1"
7	357640	CONNECTION 45ºREF.3113.06.10	CONEXION 45ºREF.3113.06.10	CONNEXION 45ºREF.3113.06.10
8	146233	BICR.HEX SCREW DIN933-8 M6X15	TOR.EX.DIN933-8.8 B.TRI.M 6X15	VIS HEX DIN933-8.8 BICR.M6X15
9	149526	BICR.WASHER B DIN125-ST 6,4	ARAN.B DIN125-ST B.TRI. 6,4	RONDELLE B DIN125-ST BICR.6,4
10	150227	BICR HEX NUT DIN934-8 M6	TUER.EX.DIN934-8 B.TRI.M 6	ECROU HEX DIN934-8 BICR.M6
11	408369	STEAM VALVE PROTECTION	PROTECCION VALVULA VAPOR	PROTECTION VANNE VAPEUR
12	344895	STEAM INLET JOINTING	UNION ENTRADA VAPOR	UNION ENTREE VAPEUR
13	185165	TEIGHTNESS GASKET TYPE G	JUNTA ESTAN.TIPO G REF.1383300	JOINT ETANCHEITE TYPE G
14	156950	THREADED FILTER 1" 0,3 PN16	FILTRO GG25 ROSC.1" PN16 0,3MM INOX	FILTRE FILETE 1" 0,3 PN16
15	185199	JOINTING SCREW 1" (WITH TILTING)	10905 TORNILLO UNION MM1" (CON VOLQUETE)	VIS UNION 1" (AVEC SOCLE BASCULANT)
16	185165	TEIGHTNESS GASKET TYPE G	JUNTA ESTAN.TIPO G REF.1383300	JOINT ETANCHEITE TYPE G
17	249516	WATER INLET SLEEVE (WITHOUT TILTING) (FOR USA AND CANADA ONLY)	MANGUITO ENTRADA AGUA-VAPOR (SIN VOLQUETE) (SOLO PARA USA Y CANADA)	MANCHON ENTREE EAU (SANS SOCLE BASCULANT) (SEULEMENT POUR USA ET CANADA)
18	306134	STEAM INLET JOINTING (WITH TILTING)	UNION ENTRADA VAPOR (CON VOLQUETE)	UNION ENTREE VAPEUR (AVEC SOCLE BASCULANT)
19	289413	STEAM INLET JOINTING SCREW (WITH TILTING) (FOR USA AND CANADA ONLY)	RACOR 1" GAS-1" NPT M-M (CON VOLQUETE) (SOLO PARA USA Y CANADA)	VIS UNION ENTREE VAPEUR (AVEC SOCLE BASCULANT) (SEULEMENT POUR USA ET CANADA)

info@zipnasklade.ru
8(800)500-69-51

Nº	REF	DENOMINATION	DENOMINACIÓN	DENOMINATION
	185199	JOINTING SCREW 1" (WITH TILTING) (EXCEPT FOR USA AND CANADA)	10905 TORNILLO UNION MM1" (CON VOLQUETE) (EXCEPTO PARA USA Y CANADA)	VIS UNION 1" (AVEC SOCLE BASCULANT) (SAUF POUR USA ET CANADA)
20	505321	RACCORD IN T D6 1/4" 31080613	RACOR EN T D6 1/4" 31080613 *	RACCORD EN T D6 1/4" 31080613
21	186734	FLOW REGULATOR T1000C2800	REGULADOR CAUDAL T1000C2800	REGULATEUR DEBIT T1000C2800
22	186668	ELBOW CONNEXION REF.3109.06.13	RACOR CODO D6 1/4" 31090613	CONNECTION COUDE RE.3109.06.13
23	186742	ANTIRETURN VALVE TS/521	VALVULA ANTIRETORNO TS/521	VANNE ANTIRETOUR TS/521
24	189829	MALE ELBOW RE. 152.13.13	CODO MACHO REF.152.13.13	COUDE MALE REF. 152.13.13
25	359752	POLYURETANE HOSE D6X4 TU0604BU (1 METER)	TUBO POLIURETANO D6X4 TU0604BU (1 METRO)	TUBE POLYURETANE D6X4 TU0604BU (1 METRE)
31	146183	BICR CYL SCREW DIN 84 M-4X25	TOR.CIL.DIN84-4.8 B.TRI.M 4X25	VIS CYL BICR DIN 84 M-4X25
32	149476	BICR.WASHER B DIN125-ST 4,3	ARAN.B DIN125-ST B.TRI. 4,3	RONDELLE B DIN125-ST BICR.4,3
33	150185	BICR.HEX.NUT DIN934-8 M4	TUER.EX.DIN934-8 B.TRI.M 4	ECROU HEX.DIN934-8 BICR.M4
36	364380	DRAIN/STEAM PNEUMATIC GROUP	GRUPO NEUMATICO DESAGÜE/VAPOR*	GROUPE PNEUMATIQUE VIDANGE/VAPEUR
37	364406	2D/STEAM PNEUMATIC GROUP (2 DRAINS)	GRUPO NEUMATICO 2D/VAPOR * (2 DESAGÜES)	GROUPE PNEUMATIQUE 2D/VAPEUR (2 VIDANGES)

info@zipnasklade.ru
8(800)500-69-51

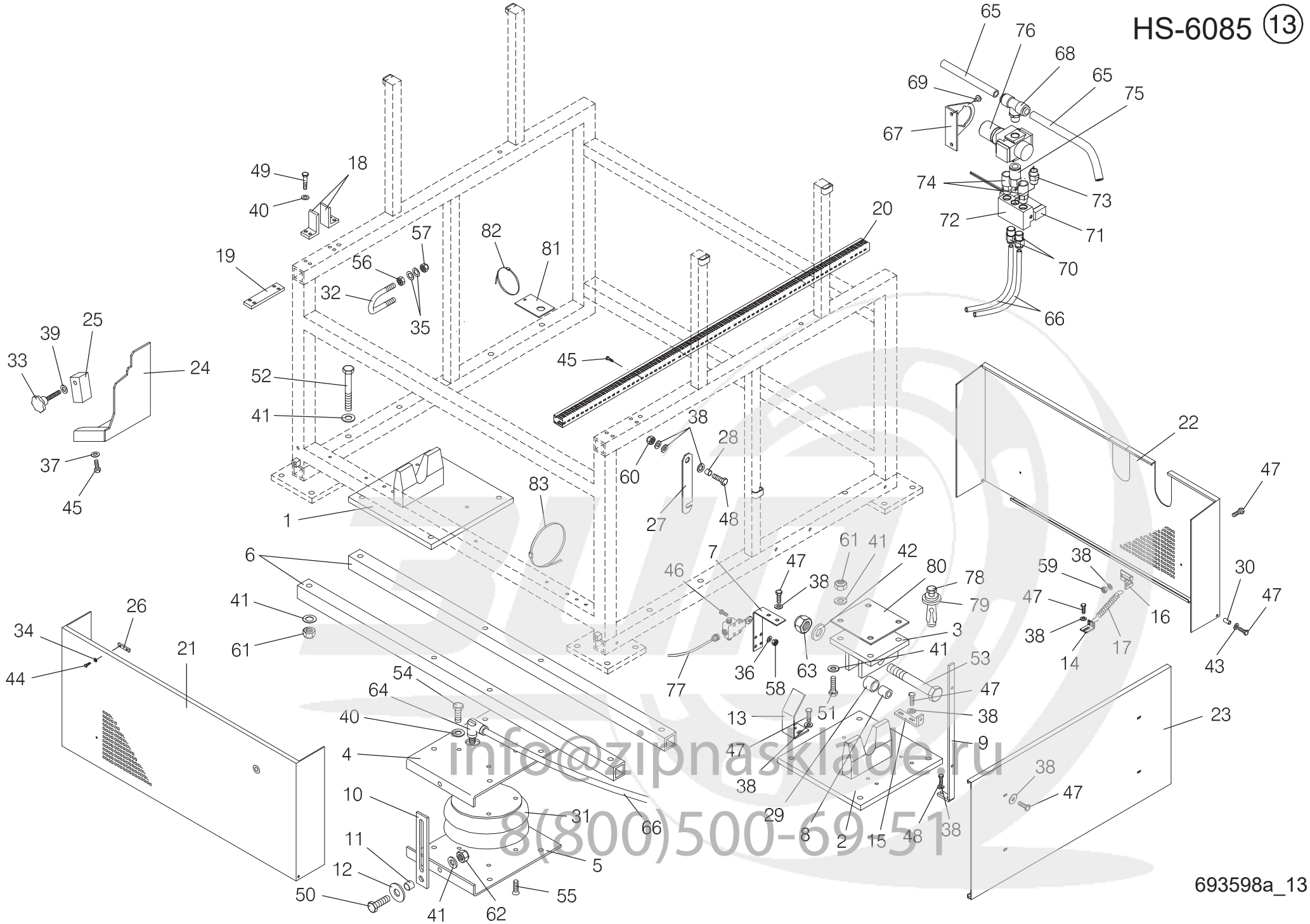

info@zipnasklade.ru
8(800)500-69-51

Nº	REF	DENOMINATION	DENOMINACIÓN	DENOMINATION
1	283184	HOLDING-DOWN PIECE	HORQUILLA ANCLAJE	PIECE SCELLEMENT
2	283242	HOLDING-DOWN PIECE	HORQUILLA ANCLAJE	PIECE SCELLEMENT
3	257865	TILTING HINGE	CHARNELA BASCULANTE	CHARNIERE BASCULANT
4	293019	ACTUATOR BRACKET	MENSULA ACTUADOR	SUPPORT ACTUATEUR
5	293027	ACTUATOR BRACKET	MENSULA ACTUADOR	SUPPORT ACTUATEUR
6	257071	ACTUATOR BEAM	VIGA ACTUADOR	POUTRE AGISSEMENT
7	283044	LIMIT SWITCH BRACKET	SOPORTE FINAL DE CARRERA	SUPPORT FIN DE COURSE
8	257873	ARTICULATION SLEEVE	CASQUILLO ARTICULACION	FRETTE ARTICULATION
9	283093	SIDE PANEL BRACKET	SOPORTE TAPAS LATERALES	SUPPORT COUVERCLE LATERAL
10	293050	ACTUATOR COURSE LIMITATOR	LIMITADOR CARRERA ACTUADOR	LIMITATUER COURSE ACTUATEUR
11	293035	SEPARATOR 22X14,5X12	SEPARADOR 22X14,5X12	SEPARATEUR 22X14,5X12
12	219071	WASHER 40X15X5	ARANDELA 40X15X5 TRIVALEN.	RONDELLE 40X15X5
13	283069	LIMIT SWITCH DRIVE	ACCIONADOR FINAL DE CARRERA	ACCIONNEMENT FIN DE COURSE
14	289116	SPRING FIXING	FIJACION MUELLE	FIXATION RESSORT
15	283127	PANEL HINGE	CHARNELA TAPA	CHARNIERE COUVERCLE
16	283085	SPRING FIXING-PIECE	FIJACION MUELLE	FIXATION RESSORT
17	177329	FINGER PROTECTION SPRING	MUELLE GUARDAMANOS	RESSORTS PROTECTION DOIGTS
18	257840	SUSPENDED SET END-PIECE	TOPE GRUPO FLOTANTE	ARRET GROUPE SUSPENDU
19	257998	END-PIECE FIXING	FIJACION TOPES	FIXATION ARRETS
20	505495	WIRE-STOP DUCT	CANAL PASACABLES	CANAL PASSECABLES
21	456046	FRONT PROTECTION COVER	TAPA PROTECCION ANTERIOR	COUVERCLE PROTECTION FRONTAL
22	283168	REAR PROTECTION COVER	TAPA PROTECCION POSTERIOR	COUVERCLE PROTECTION ARRIERE
23	283176	SIDE PROTECTION COVER	TAPA PROTECCION LATERAL	COUVERCLE PROTECTION LATERAL
24	284950	KNOB PROTECTION	PROTECCION EMPUÑADURA	PROTECTION POIGNEE
25	284943	KNOB PROTECTION PIECE	PIEZA PROTECCION EMPUÑADURA	PIECE PROTECTION POIGNEE
26	289397	COVERS SEPARATOR	SEPARADOR TAPAS	SEPARATEUR COUVERCLES
27	258228	DOOR HOOK	GANCHO ESCOTILLA	CROCHET HUBLOT
28	189696	SELFOIL SLEEVE B11A 6-10-5	COJ. SELFOIL B11A 6-10- 5	FRETTE SELFOIL B11A 6-10-5

info@zipnasklade.ru
8(800)500-69-51

Nº	REF	DENOMINATION	DENOMINACIÓN	DENOMINATION
29	187245	SELFOIL SLEEVE B11A40-50-40	COJ. SELFOIL B11A40-50-40	FRETTE SELFOIL B11A40-50-40
30	276527	LOCK END-PIECE	TOPE CIERRE	ARRET FERMETURE
31	187237	PNEUMATIC DRIVE MOD.21	ACCIONADOR NEUMATICO ORIA M-100*	ACTIONNEMENT PNEUMATIQUE
32	258210	DOOR HOOK FIXING	SUJECCION GANCHO ESCOTILLA	FIXATION CROCHET HUBLOT
33	304394	KNOB 1126.E DIN 6336.D	POMO 1126.E DIN 6336.D M8X47	POIGNEE 1126.E DIN 6336.D
34	149476	BICR.WASHER B DIN125-ST 4,3	ARAN.B DIN125-ST B.TRI. 4,3	RONDELLE B DIN125-ST BICR.4,3
35	149328	INOX A2 WASHER DIN 125 4,3	ARAN. DIN125 INOX A2 4,3	RONDELLE INOX A2 DIN 125 4,3
36	149534	BICR.WASHER B DIN125-ST 5,3	ARAN.B DIN125-ST BICR. 5,3	RONDELLE B BICR.DIN125-ST 5,3
37	149369	INOX A2 WASHER DIN 125 5,3	ARAN. DIN125 INOX A2 5,3	RONDELLE INOX A2 DIN 125 5,3
38	149526	BICR.WASHER B DIN125-ST 6,4	ARAN.B DIN125-ST B.TRI. 6,4	RONDELLE B DIN125-ST BICR.6,4
39	149351	WASHER DIN 125B M8 INOX A2	ARANDELA DIN 125B M8 INOX A2	RONDELLE DIN 125B M8 INOX A2
40	149500	BICR.WASHER B DIN125-ST 10,5	ARAN.B DIN125-ST B.TRI.10,5	RONDELLE B DIN125-ST BICR.10,5
41	149393	WASHER DIN 125B M14 ST TRIVALENT	ARANDELA DIN 125B M14 ST TRIVALENTE	RONDELLE DIN 125B M14 ST TRIVALENT
42	149427	BICR WASHER B DIN125-ST 21	ARAN.B DIN125-ST B.TRI.21	RONDELLE B BICR.DIN125-ST 21
43	115758	WASHER 20X7X2	ARANDELA 20X7X2 INOX	RONDELLE 20X7X2
44	146241	BICR.HEX SCREW DIN933-8.8 M4X6	TOR.EX.DIN933-4.8 B.TRI.M 4X 6	VIS HEX DIN933-8.8 BICR M 4X 6
45	144774	HEX SCREW DIN 933 A2-70 M5x10	TORNILLO HEXAGONAL DIN 933 A2-70 M5x10	VIS HEXAGONALE DIN 933 A2-70 M5x10
46	145748	SCREW DIN85 INOX A2-70 M5X45	TOR.PLA.DIN85 INOX A2-70 M5X45	VIS P DIN85 INOX A2-70 M5X45
47	146233	BICR.HEX SCREW DIN933-8 M6X15	TOR.EX.DIN933-8.8 B.TRI.M 6X15	VIS HEX DIN933-8.8 BICR.M6X15
48	146316	BICR.HEX SCREW DIN933-8 M-6X20	TOR.EX.DIN933-8.8 B.TRI.M 6X20	VIX HEX BICR.DIN933-8.8 M-6X20
49	146977	HEX SCREW 8G DIN 933 M-10X35	TOR.EX.DIN933-8.8 B.TRI.M10X35	VIS HEX 8G DIN 933 M-10X35
50	146720	BI HEX SCREW DIN-933-8.M14X40	TOR.EX.DIN933-8.8 B.TRI.M14X40	VIS HEX DIN-933-8.8 BIC.M14X40
51	176172	HEX SCREW DIN 933 8,8 M14x55 TRIVALENT	TORNILLO HEXAGONAL DIN 933 8,8 M14x55 TR	VIS HEXAGONALE DIN 933 8,8 M14x55 TRIVAL
52	147033	BIC.HEX SCREW DIN931-8 M14X130	TOR.EX.DIN931-88 B.TRI.M14X130	VIS HEX BICR DIN931-8 M14X130
53	146993	BIC.HEX SCREW DIN931-8 M20X100	TOR.EX.DIN931-88 B.TRI.M20X100	VIS HEX DIN931-8 BICR.M20X100
54	148106	ZINC HEC SCREW DIN933 W3/8"X25	TOR.EX.DIN933-88B.TRI.W3/8"X25	VIS HEX ZINC DIN933 W3/8"X25
55	304071	ALLEN SCREW SIN7991-8.8 3/8X25	TOR.AV.ALL.8.8 DIN7991 B.TRI.3/8X25	VIS ALLEN DIN7991-8.8 3/8X25
56	149922	INOX HEX. NUT DIN 934 M-4	TUER.EX.DIN934 INOX A2-70 M 4	ECROU HEX. INOX DIN 934 M-4

info@zipnasklade.ru
8(800)500-69-51

Nº	REF	DENOMINATION	DENOMINACIÓN	DENOMINATION
57	176792	SELF-LOCKING NUT DIN985 INOX M 4	TUER.AUTOBL.DIN985 INOX M 4*	ECROU AUTOBLOCANT DIN985 INOX M 4
58	176826	SELF-LOCKING NUT DIN985-8 B.TRI.M5	TUER.AUTOBL.DIN985-8 B.TRI.M5	ECROU AUTOBLOCANT DIN 985-8 B.TRI.M5
59	150227	BICR HEX NUT DIN934-8 M6	TUER.EX.DIN934-8 B.TRI.M 6	ECROU HEX DIN934-8 BICR.M6
60	176834	SELF-LOCKING NUT DIN985-8 B.TRI.M6	TUER.AUTOBL.DIN985-8 B.TRI.M6	ECROU AUTOBLOCANT DIN985-8 B.TRI.M6
61	164350	SELF-LOCKING NUT DIN 985 8 M14 TRIVALENT	TUERCA AUTOBLOCANTE DIN 985 8 M14 TRIVAL	ECROU AUTOFREINE DIN 985 8 M14 TRIVALENT
62	150342	BICR.HEX.NUT REB.DIN934-8 M 14	TUER.EX.RB.DIN936-8 B.TRI.M14	ECROU HEX.REB DIN936-8 BIC.M14
63	186866	SELF-LOCKING NUT DIN985-8B.TRI.M20	TUER.AUTOBL.DIN985-8B.TRI.M20	ECROU AUTOBLOCANT DIN985-8B.TRI.M20
64	359786	ELBOW RACCORD D6 1/4" 31290613	RACOR CODO EL D6 1/4" 31290613	RACCORD COUDE D6 1/4" 31290613
65	359760	POLYURETANE HOSE D10X6.5 TU1065BU (1 METER)	TUBO POLIURET.D10X6.5 TU1065BU (1 METRO)	TUBE POLYURETANE D10X6.5 TU1065BU (1 METRE)
66	359752	POLYURETANE HOSE D6X4 TU0604BU (1 METER)	TUBO POLIURETANO D6X4 TU0604BU (1 METRO)	TUBE POLYURETANE D6X4 TU0604BU (1 METRE)
67	454710	PRESSURE ADJUSTING SQUARE	ESCUADRA REGULADOR PRESION	EQUERRE REGLAGE PRESSION
68	360115	T RACCORD D10 1/4" 31081013 *	RACOR EN T D10 1/4" 31081013 *	RACCORD T D10 1/4" 31081013 *
69	183400	PLATE SCREW ST-4, 20 P.F. C/AL.T25	TORNILLO CHAPA ST-4 (ESPECIAL)*	VIS PLAQUE ST-4, 20 P.F. C/AL.T25
70	359588	RACCORD IN REC D6 1/4 KQ2H06-02S	RACOR EN REC D6 1/4 KQ2H06-02S	RACCORD EN REC D6 1/4 KQ2H06-02S
71	359596	E.V N/C DOUBLE 12DC SV2A00-6W3A	E.V N/C DOBLE 12DC SV2A00-6W3A	E.V N/C DOUBLE 12DC SV2A00-6W3A
72	359661	BASE PLATE SY5000-27-1F-Q	PLACA BASE SY5000-27-1F-Q	PLAQUE BASE SY5000-27-1F-Q
73	359679	STRAIGHT UNION 1/4 2500 1/4	UNION RECTA 1/4 2500 1/4	UNION DROITE 1/4 2500 1/4
74	359687	SILENCER AN203-02	SILENCIADOR AN203-02	SILENCIEUX AN203-02
75	359695	EXTENSION 1/4 2525-1/4-27	ALARGADERA 1/4 2525-1/4-27	EXTENSION 1/4 2525-1/4-27
76	359703	PRESSURE REGULATOR AR20-F02H	REGULADOR PRESION AR20-F02H-B	REGULATEUR DE PRESSION AR20-F02H
77	505891	TILT ELECT. INSTALLATION	INST. ELEC. TILT	INST. ELEC. TILT
	327304	LIMIT SWITCH M4VH 355-20ZM20	FINAL CARRERA M4VH 355-20ZM20*	FIN DE COURSE M4VH 355-20ZM20
	456673	DISTRIBUTOR REF.TSD-171717G	DISTRIBUIDOR REF.TSD-171717G	DISTRIBUTEUR REF.TSD-171717G
	456665	RACCORD M20 REF.MIR-17M20G	RACOR M20 REF.MIR-17M20G	RACCORD M20 REF.MIR-17M20G
	330324	NYLOFIX HOSE DIN17 REF.AGT-17G (1 METER)	TUBO NYLOFIX DN17 REF.AGT-17G (1 METRO)	TUBE NYLOFIX DIN17 REF.AGT-17G (1 METRE)
78	189746	METALLIC END PIECE REIDO T-16 C	TACO METALICO REIDO T-16 C	ARRET METALLIQUE REIDO T-16 C
79	110726	WASHER	ARANDELA 34X13X4 TRIVALEN.	RONDELLE

info@zipnasklade.ru
8(800)500-69-51

Nº	REF	DENOMINATION	DENOMINACIÓN	DENOMINATION
80	259614	HOLDING-DOWN SUPPLEMENT	SUPLEMENTO ANCLAJE	SUPPLEMENT SCELLEMENT
81	258442	PRESSOSTAT HOSE BRACKET	SOPORTE TUBO PRESOSTATO	SUPPORT TUBE PRESSOSTAT
82	140525	CLAMP 2244-0	BRIDA UNEX 2244-0 *	BRIDE 2244-0
83	140509	BLACK POLYAMIDE CLAMP 7.5X360MM	BRIDA POLIAMIDA NEGRA 7.5X360MM	BRIDE POLYAMIDE NOIR 7.5X360MM

info@zipnasklade.ru
8(800)500-69-51

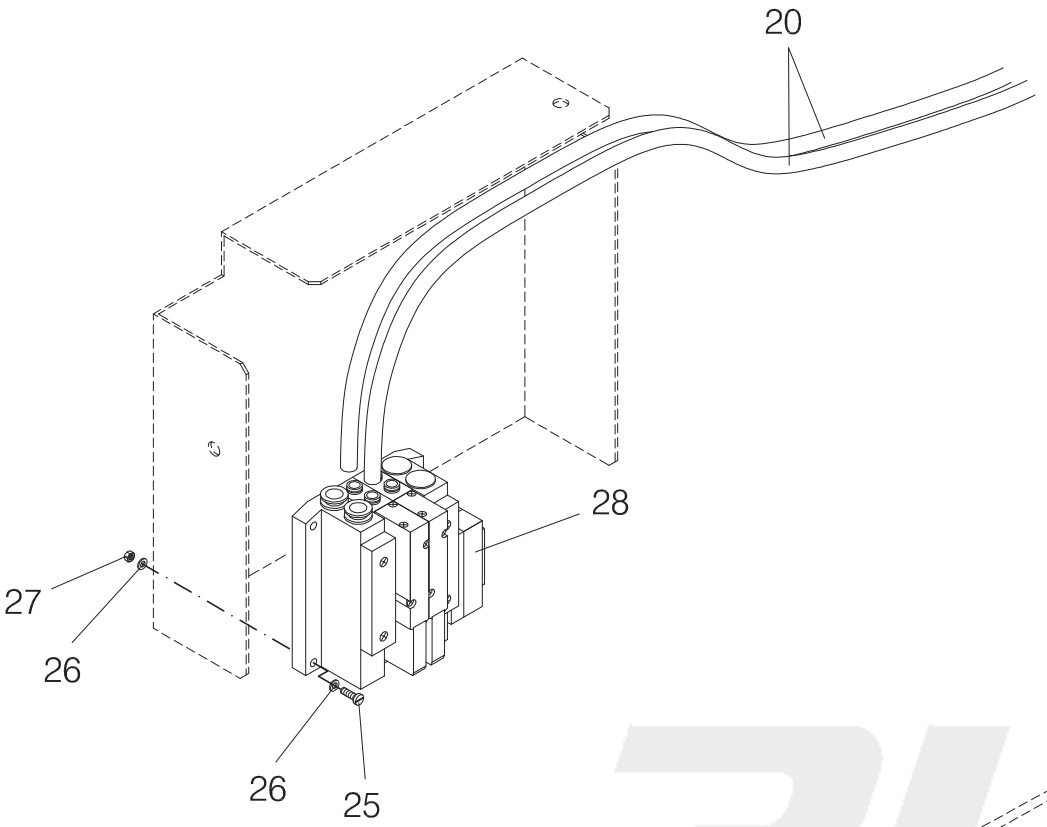

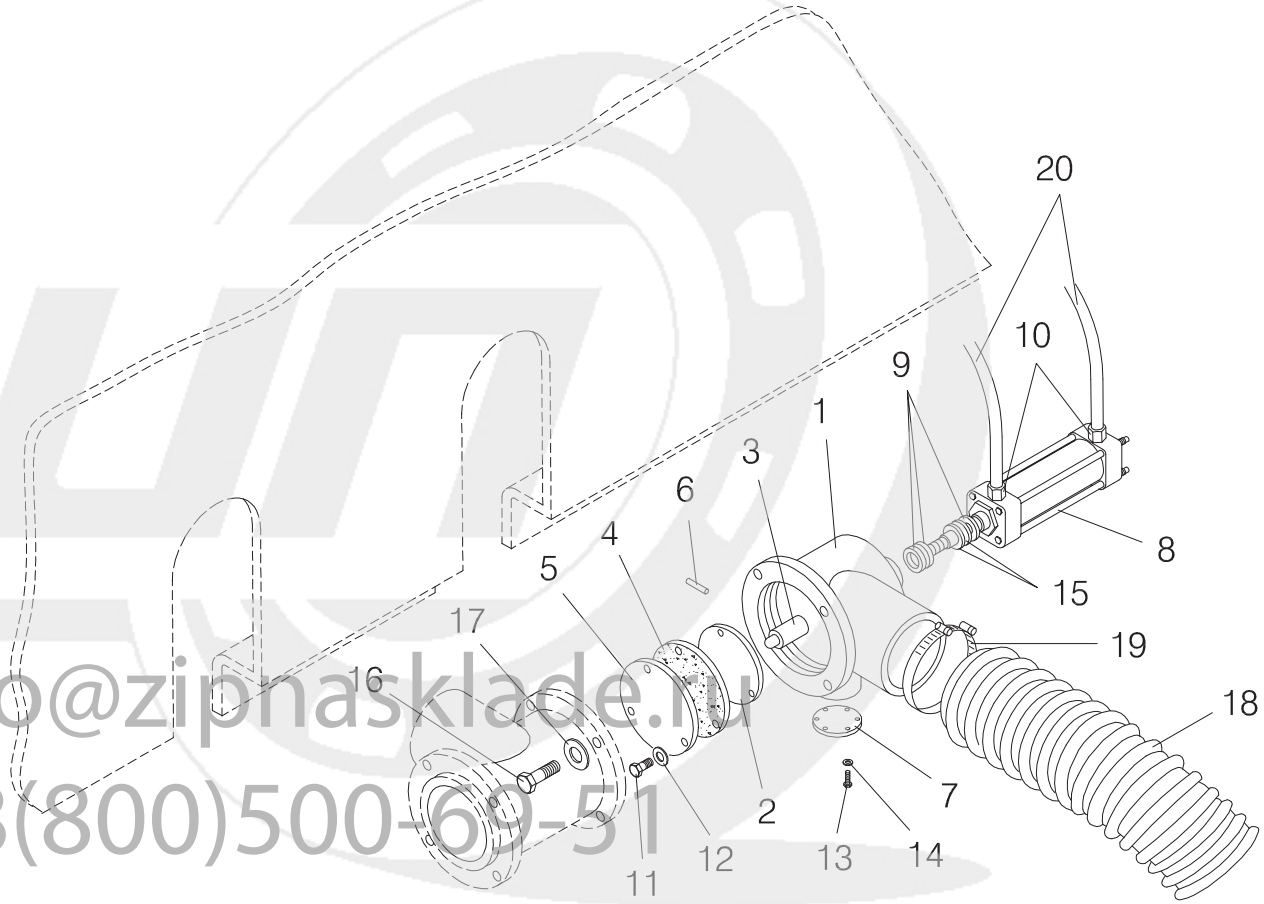

info@zipnasklade.ru
8(800)500-69-51

693598a_14

Nº	REF	DENOMINATION	DENOMINACIÓN	DENOMINATION
1	258632	DRAIN BODY COVER	TAPA CUERPO DESAGÜE	COUVERCLE CORPS VIDANGE
2	213512	DRAIN LOCK	CIERRE DESAGÜE	FERMETURE VIDANGE
3	213520	LOCK HEAD	CABEZA DEL CIERRE	TETE DE LA FERMETURE
4	213538	DRAIN MEMBRANE	MEMBRANA DESAGÜE	MEMBRANE VIDANGE
5	216598	MEMBRANE FIXING DISK	DISCO FIJACION MEMBRANA	DISQUE FIXATION MEMBRANE
6	216762	DRAIN LOCKING BOLT	PASADOR CIERRE DESAGÜE	GOUJON FERMETURE VIDANGE
7	258624	VAPOUR OUTLET COVER	TAPA SALIDA VAHOS	COUVERCLE SORTIE VAPEURS
8	186551	PNEUMATIC CYLINDER M-920/75	CILINDRO NEUMATICO CARRERA 75MM	CYLINDRE PNEUMATIQUE M-920/75
9	185165	TEIGHTNESS GASKET TYPE G	JUNTA ESTAN.TIPO G REF.1383300	JOINT ETANCHEITE TYPE G
10	186569	CONNECTION RE. 3101.06.13	CONEXION RECTA REF.3101.06.13	CONNEXION REF. 3101.06.13
11	144964	HEX SCREW DIN 933 A2-70 M8x16	TORNILLO HEXAGONAL DIN 933 A2-70 M8x16	VIS HEXAGONALE DIN 933 A2-70 M8x16
12	149351	WASHER DIN 125B M8 INOX A2	ARANDELA DIN 125B M8 INOX A2	RONDELLE DIN 125B M8 INOX A2
13	144832	INOX.HEX.SCREW DIN 933 M-4X10	TOR.EX.DIN933INOX A2-70 M 4X10	VIS HEX INOX. DIN 933 M-4X10
14	149328	INOX A2 WASHER DIN 125 4,3	ARAN. DIN125 INOX A2 4,3	RONDELLE INOX A2 DIN 125 4,3
15	259606	INOX WASHER 41X34X0,4	ARANDELA 41X34X0.4 INOX	RONDELLE 41X34X0,4 INOX
16	147025	HEX SCREW 8G DIN 933 M-12X30	TOR.EX.DIN933-8.8 B.TRI.M12X30	VIS HEX. 8G DIN933 M-12X30
17	149419	BICR.WASHER B DIN125-ST 13	ARAN.B DIN125-ST B.TRI.13	RONDELLE B DIN125-ST BICR.13
18	257170	DRAIN OUTLET HOSE	TUBO SALIDA DESAGÜE	TUBE SORTIE VIDANGE
19	166660	CLAMP 131-139	ABRAZADERA 131-139 *	BRIDE D131-139
20	359752	POLYURETANE HOSE D6X4 TU0604BU (1 METER)	TUBO POLIURETANO D6X4 TU0604BU (1 METRO)	TUBE POLYURETANE D6X4 TU0604BU (1 METRE)
25	146183	BICR CYL SCREW DIN 84 M-4X25	TOR.CIL.DIN84-4.8 B.TRI.M 4X25	VIS CYL BICR DIN 84 M-4X25
26	149476	BICR.WASHER B DIN125-ST 4,3	ARAN.B DIN125-ST B.TRI. 4,3	RONDELLE B DIN125-ST BICR.4,3
27	150185	BICR.HEX.NUT DIN934-8 M4	TUER.EX.DIN934-8 B.TRI.M 4	ECROU HEX.DIN934-8 BICR.M4
28	364398	2 DRAINS PNEUMATIC GROUP	GRUPO NEUMATICO 2 DESAGÜES *	GROUPE PNEUMATIQUE 2 VIDANGES
		WITHOUT ILLUSTRATION	SIN ILUSTRACION	SANS ILLUSTRATION
	793588	SECOND DRAIN KIT	KIT 2º DESAGUE HS-6110	KIT DEUXIEME VIDANGE

info@zipnasklade.ru
8(800)500-69-51

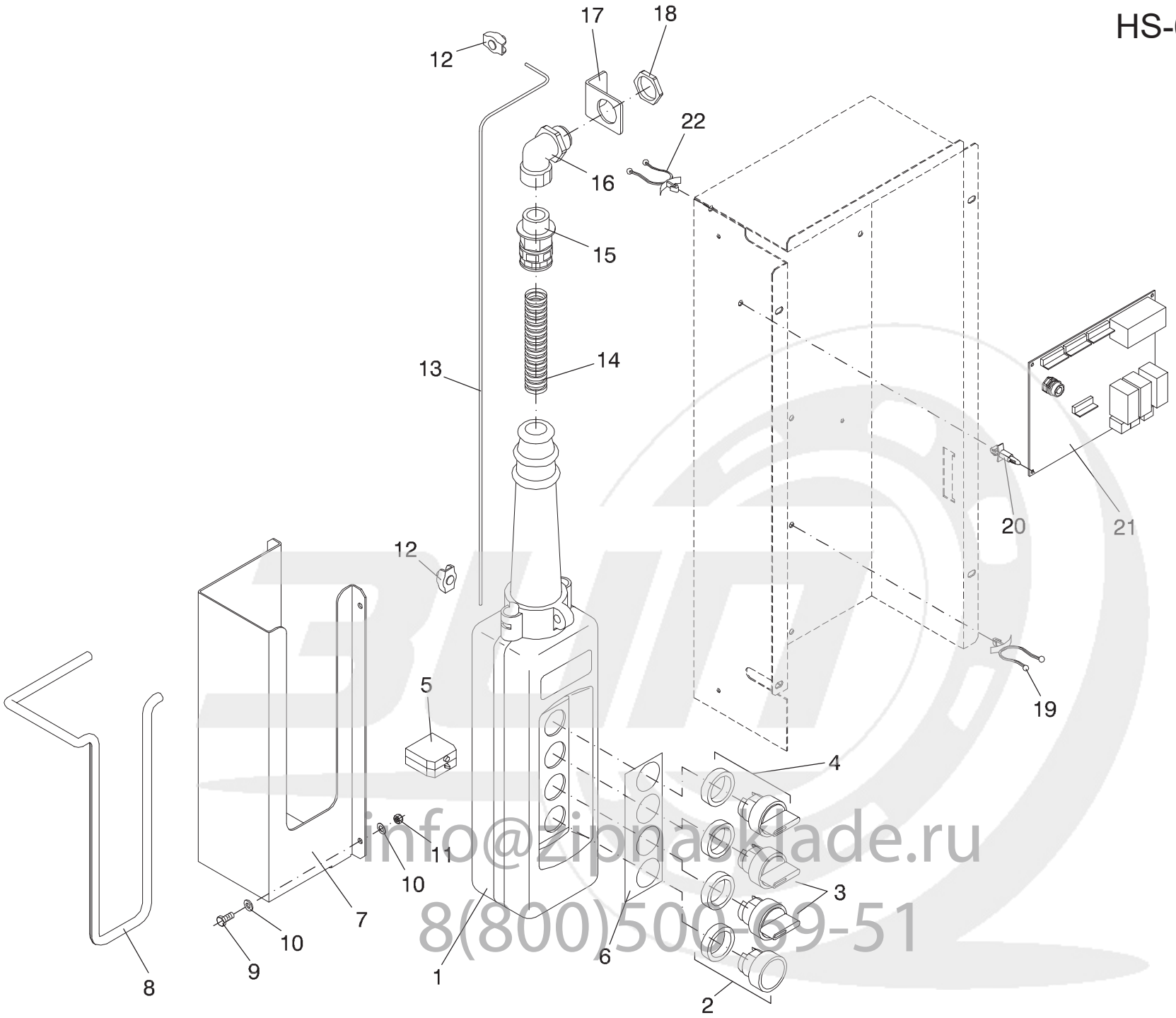

info@zipnacklade.ru
8(800)500-69-51

Nº	REF	DENOMINATION	DENOMINACIÓN	DENOMINATION
1	553156	PENDANT CONTROL ST. 4 BUTTONS	CAJA COLGANTE 4 BOTONES *	BOITE PENDANTE 4 BOUTONS
2	553131	BLACK RND.RAS.PUSH-BUTTON ZA2-	PULSADOR RAS.RED.NEGR.ZA2-BA2*	PULSATEUR RAS.RND.NOIR ZA2-BA2
3	553123	BLACK 3POS.SELECTOR ZA2-BD3	SELECTOR 3POS.EMB.NEG.ZA2-BD3*	SELECTEUR 3POS.GAR.NOI.ZA2-BD3
4	553115	BLACK 3POS.SELECTOR ZA2-BD5	SELECTOR 3POS.EMB.NEG.ZA2-BD5*	SELECTEUR 3POS.GAR.NOI.ZA2-BD5
5	153163	CONTACT 1*NA ZB2-BE101	CONTACTO 1*NA ZB2-BE101 *	CONTACT 1*NA ZB2-BE101
6	552083	CONTROL LABEL	ETIQUETA MANDO	ETIQUETTE COMMANDE
7	549014	CONTROL BRACKET	SOPORTE MANDO	SUPPORT COMMANDE
8	165472	ETHILENE-PROP. PROFILE (1 METER)	PERFIL ETILENO-PROP.REF.44117L (1 METRO)	PROFILE ETHILENE-PROP. (1 METRE)
9	146258	BIC.HEX SCREW DIN933-4.8 M4X10	TOR.EX.DIN933-4.8 B.TRI.M 4X10	VIS HEX DIN933-4.8 BICR.M 4X10
10	149476	BICR.WASHER B DIN125-ST 4,3	ARAN.B DIN125-ST B.TRI. 4,3	RONDELLE B DIN125-ST BICR.4,3
11	132043	SELF-LOCKING NUT DIN985-8 B.TRI.M 4	TUER.AUTOBL.DIN985-8 B.TRI.M 4	ECROU AUTOBLOCANT DIN985-8 B.TRI.M 4
12	112219	CABLE CLIP 3 MM	SUJETA CABLES VIMI DE 3 MM.	ATTACHE CABLE 3 MM
13	553149	STEEL WIRE D2 (1 METER)	CABLE ACERO D2 (1 METRO)	CABLE ACIER D2 (1 METRE)
14	510529	NYLOFIX HOSE DN12 REF.AGT-12G (1 METER)	TUBO NYLOFIX DN12 REF.AGT-12G (1 METRO)	TUBE NYLOFIX DN12 REF.AGT-12G (1 METRE)
15	510552	RACCORD M20 REF.MIR-12M20G	RACOR M20 REF.MIR-12M20G	RACCORD M20 REF.MIR-12M20G
16	553164	ELBOW 90º METALLIC 572054 M20	CODO 90º METALICO 572054 M20	COUDE 90º METALLIQUE 572054M20
17	552182	CTRL. HANGING CABLE END-PIECE	TOPE CABLE RETENCION MANDO	ARRET CABLE RETENTION COMMANDE
18	341354	NUT M 312005 M20	TUERCA M 312005 M20	ECROU M 312005 M20
19	352237	TORSION CLAMP 20MM	ABRAZADERA TORSION 20MM	TORSION CLAMP 20MM
20	332809	CIRCUIT BRACKET LCBS-4-7-01	SOPORTE CIRCUITO LCBS-4-7-01	SUPPORT CIRCUIT LCBS-4-7-01
21	549386	INTELI BOARD E/S-4/A (TILT)	PLACA INTELI E/S-4/A (MD)	PLAQUE INTELI E/S-4/A (TILT)
22	199893	CLAMP STL-450-3-01	ABRAZADERA STL-450-3-01	BRIDE STL-450-3-01

info@zipnasklade.ru
8(800)500-69-51