Mod.	From serial no. A partir máq. nº
HS-6040	2.150.001
EH090	1.500.001

Parts Handbook for Washers
Manual de Recambios para lavadoras
Notice Vues Eclatées pour laveuses

HS-6040
EH090

info@zipnasklade.ru
8(800)500-69-51

GIRBAU, S.A.
Crta de Manlleu, km. 1
08500 VIC (Barcelona) • SPAIN
Tel. 34 93 8861100
Fax 34 93 8860785
girbau@girbau.es
www.girbau.com

USA, CANADA:

CONTINENTAL GIRBAU Inc.
2500 State Road 44
WI 54904 Oshkosh • USA
Tel. 1(920) 231-8222
Fax 1(920) 231-4666
info@cont-girbau.com
www.cont-girbau.com

Parts Handbook
Manual de recambios
Vues Eclatées

HS-6040
EH090

Cod. 503383 D
Rev. 03/0616

NOTES TO USE PARTS LIST

Sheets no. 1, 2, 3, 5, 8:
Are common for all versions.

Sheets no. 4: Type of furniture.

Sheets no. 6: Inteli Control.

Sheets no. 7: Electrical box.

Sheets no. 9: Type of inlets.

Sheets no. 10:
Electric heating

Sheets no. 11:
Steam heating

Sheet no. 12:
Double drain

Sheet no. 13:
Relates to "TILT" system machines only.

Sheet no. 14: Relates to machines equipped with remote control.

Sheet no. 15: Coin Control.

ACLARACIONES PARA EL USO DEL MANUAL DE RECAMBIOS

Hojas nº 1, 2, 3, 5, 8: Son comunes a todas las variantes.

Hojas nº 4: Tipo de mueble.

Hojas nº 6: Inteli Control.

Hojas nº 7: Caja eléctrica.

Hojas nº 9: Tipo de entradas de agua.

Hojas nº 10: Calefacción eléctrica.

Hojas nº 11:
Calefacción a vapor.

Hoja nº 12:
Doble desagüe.

Hoja nº 13: Máquinas con sistema "VOLQUETE".

Hoja nº 14: Corresponde a las máquinas con mando a distancia.

Hoja nº 15: Coin Control.

NOTES UTILISATION VUES ECLATEES

Feuilles no.1, 2, 3, 5, 8:
Sont communes à toutes les versions.

Feuilles no. 4: Type de meuble.

Feuilles no. 6: Inteli Control.

Feuilles no. 7: Boîte électrique.

Feuilles no. 9: Type d'entrées.

Feuilles no. 10: Chauffage électrique.

Feuilles no. 11:
Chauffage à vapeur.

Feuille no. 12:
Double vidange

Feuille no. 13:
Est seulement pour machines avec système "BASCULANT"

Feuille no. 14:
Correspond à machines avec télécommande.

Feuille no. 15 : Coin Control.

info@zipnasklade.ru
8(800)500-69-51

VERY IMPORTANT:
Before ordering parts be sure they have not been modified. Check it on modification sheet, after the corresponding sheet.

MUY IMPORTANTE:
Al pedir una pieza cerciorarse antes de que la misma no ha sido modificada. Si lo hubiese sido, estaría situada como hoja de modificaciones, detrás de la hoja correspondiente.

TRES IMPORTANT:
Avant de commander une pièce, s'assurer qu'elle n'a pas été modifiée. Le vérifier sur feuille de modifications, derrière la feuille correspondante.

HS-6040 1

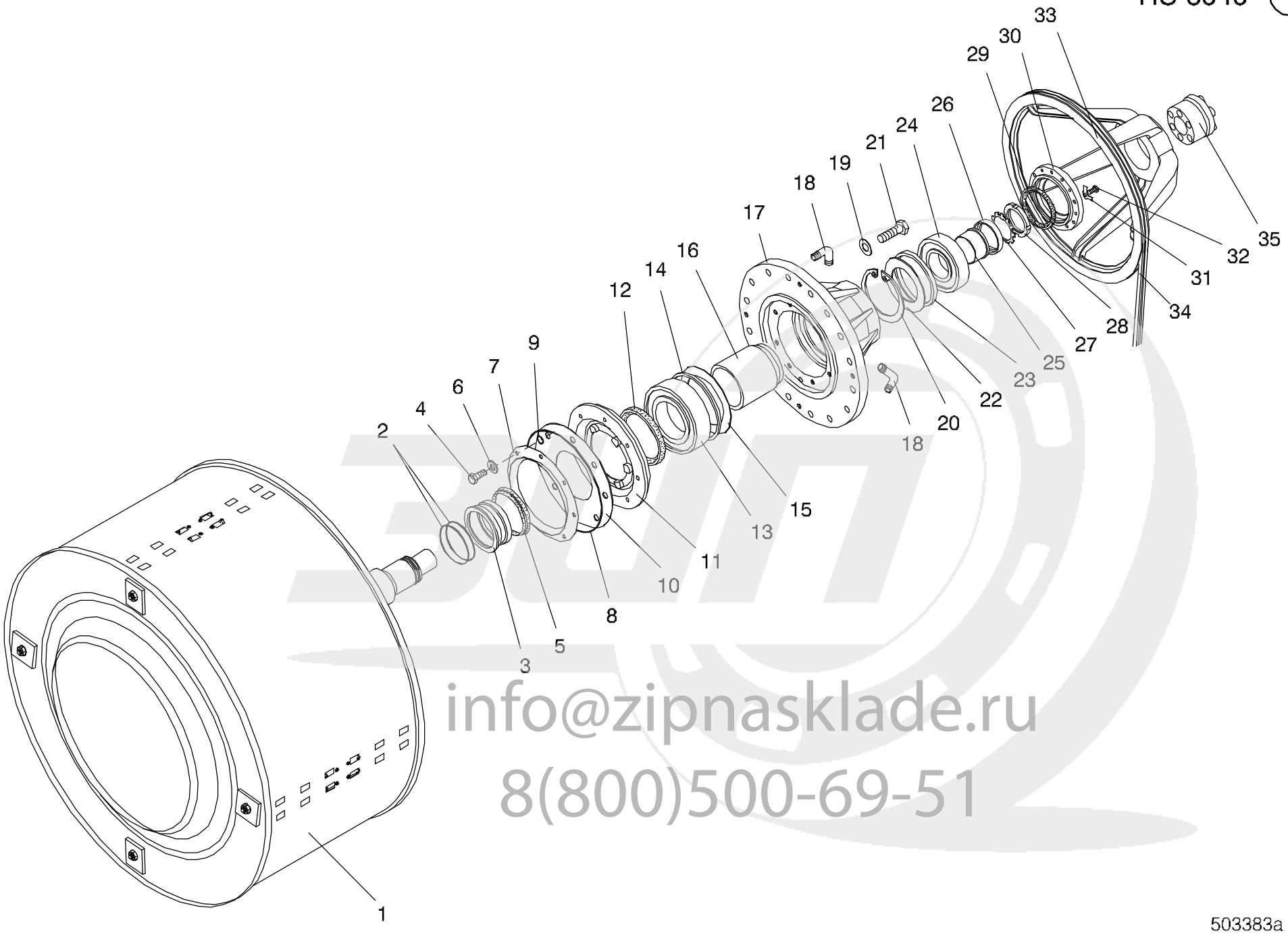

info@zipnasklade.ru
8(800)500-69-51

503383a_01

Nº	REF	DENOMINATION	DENOMINACIÓN	DENOMINATION
1	452110	BASKET	TAMBOR	TAMBOUR
2	193987	TORIC GASKET 120X132X6	JUNTA TORICA 120X132X6	JOINT TORIQUE 120X132X6
3	294470	SEAL RING	ANILLO RETENES	BAGUE RESERVES
4	175687	INOX HEX SCREW DIN 933 M-10X60	TOR.EX.DIN933INOX A2-70 M10X60	VIS HEX.INOX DIN 933 M-10X60
5	316588	RING V-RING V-150 A VITON	ANILLO V-RING V-150 A VITON	BAGUE V-RING V-150 A VITON
6	254144	WASHER D35XD10.25X6	ARANDELA 35X10.25X6 INOX	RONDELLE D35XD10.25X6
7	294462	V-RING PROTECTION	PROTECCION V-RING	PROTECTION V-RING
8	315580	TORIC GASKET	JUNTA TORICA316,87X330,85X6,99	JOINT TORIQUE
9	147991	TORIC GASKET 10X23X6,5	JUNTA TORICA 10X23X6,5	JOINT TORIQUE 10X23X6,5
10	294322	SEAL COVER	TAPA RETEN	COUVERCLE RESERVE
11	294314	FRONT SEAL COVER	TAPA RETEN ANTERIOR	COUVERCLE RESERVE AVANT
12	147538	SEAL 150X180X15 BA	RETEN 150X180X15 DIN 3760-A NBR	RESERVE 150X180X15 BA
13	316497	BEARING NU-2224E	RODAMIENTO NU 2224 ECP	ROULEMENT NU-2224E
14	316521	GUIDE RING FRB-10/215	ANILLO DE GUIA FRB 10/215	BAGUE DE GUIDE FRB-10/215
15	294488	GREASE OBTURATION PLATE	PLACA OBTURACION GRASA	PLAQUE OBTURATION GRAISSE
16	294348	BEARING END-PIECE	TOPE COJINETES	ARRET ROULEMENTS
17	294306	BEARING BOX	CAJA COJINETES	BOITE ROULEMENTS
18	122531	HOSE ELBOW 90º de 20mm	CODO MANGUERA 90º de 20mm	COUDE TUYAU 90º de 20mm
19	149385	BICR.WASHER B DIN125-ST 17	ARAN.B DIN125-ST B.TRI.17	RONDELLE B DIN125-ST BICR.17
20	316539	FLEXIBLE RING I-160 DIN472	ANILLO ELASTICO I-160 DIN 472	BAGUE ELASTIQUE I-160 DIN472
21	147082	HEX SCREW 8G DIN933 M16X60	TOR.EX.DIN933-8.8 B.TRI.M16X60	VIS HEX. 8G DIN933 M16X60
22	294496	GREASE OBTURATION PLATE	PLACA OBTURACION GRASA	PLAQUE OBTURATION GRAISSE
23	316513	GUIDE RING FRB-12,5/160	ANILLO DE GUIA FRB 12.5/160	BAGUE DE GUIDE FRB-12,5/160
24	316505	BEARING 22218 CK	RODAMIENTO 22218 EK	ROULEMENT 22218 CK
25	316547	DIASSEMBLY SLEEVE AHX-318	MANGUITO DESMONTAJE AHX-318	MANCHON DEMONTAGE AHX-318
26	294504	SEAL RING	ANILLO RETEN	BAGUE RESERVE
27	316570	LOCKING WASHER MB-17	ARANDELA CIERRE MB-17	RONDELLE FERMETURE MB-17
28	316562	FIXING NUT KM-17	TUERCA FIJACION KM-17 KSM	ECROU FIXATION KM-17

info@zipnasklade.ru
8(800)500-69-51

Nº	REF	DENOMINATION	DENOMINACIÓN	DENOMINATION
29	121517	SEAL 130X110X12 BA	RETEN 130X110X12 DIN 3760-A NBR	RESERVE 130X110X12 BA
30	294330	REAR SEAL COVER	TAPA RETEN POSTERIOR	COUVERCLE RESERVE ARRIERE
31	195735	SAFETY WASHER 6,4 DIN 463	ARANDELA SEGURIDAD 6,4 DIN 463	RONDELLE SECURITE 6,4 DIN 463
32	192385	BICR.HEX.SCREW DIN933-8 M6X35	TOR.EX.DIN933-8.8 B.TRI.M 6X35	VIS.HEX.DIN933-8,8 BICR.M6X35
33	294355	BASKET PULLEY	POLEA TAMBOR	POULIE TAMBOUR
34	321109	TRAPEZOIDAL BELT SPA-2532	CORREA TRAPECIAL SPA-2532	COURROIE TRAPEZOIDALE SPA-2532
35	316554	SELFCENT.FIX.UNIT 5B 70X110	UNIDAD FIJ.AUTOCENT.5B 70X110	UNITE FIX.SELFCENT.5B 70X110

info@zipnasklade.ru
8(800)500-69-51

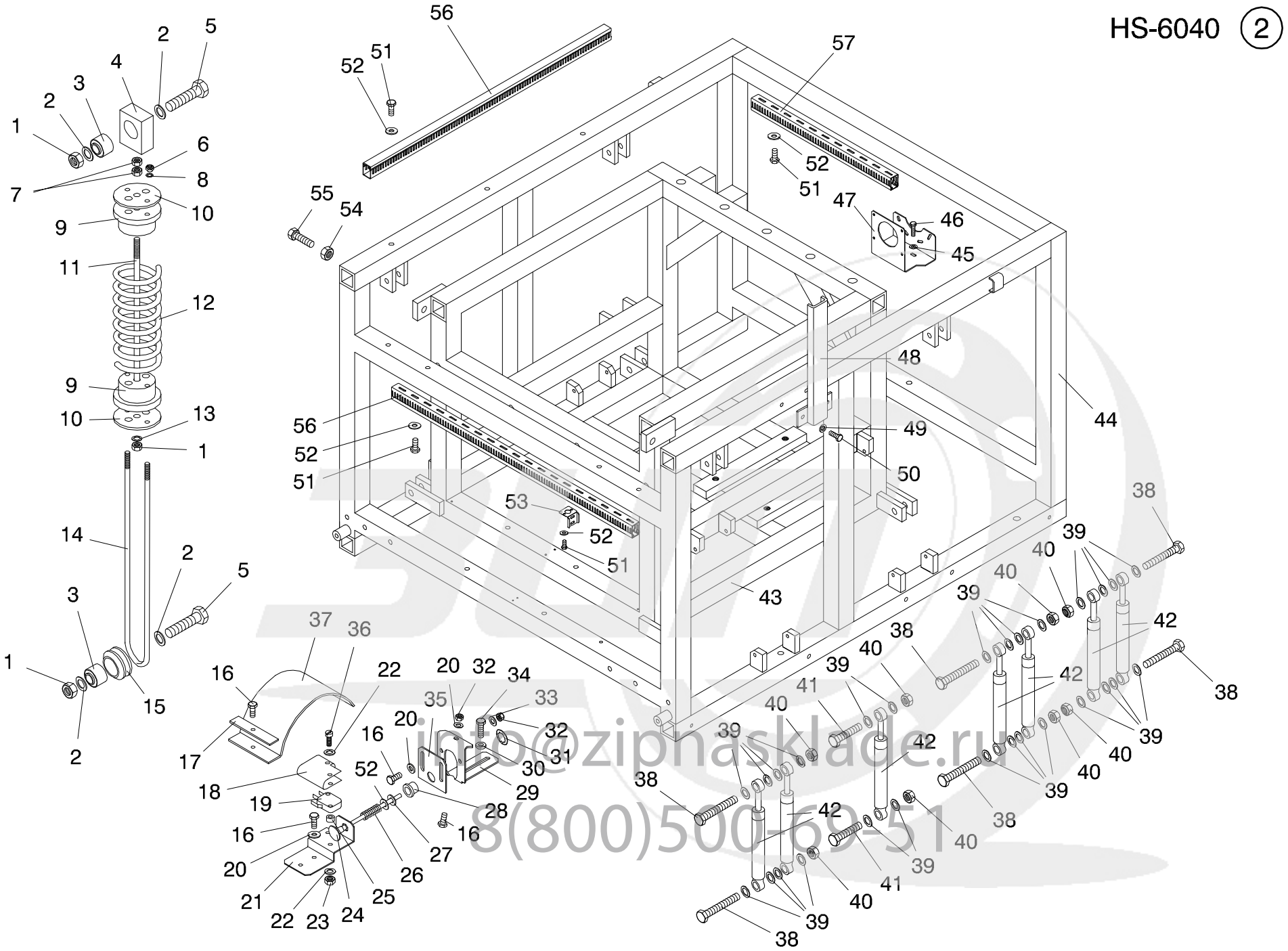

info@zipnasklade.ru
8(800)500-69-51

503383a_02

Nº	REF	DENOMINATION	DENOMINACIÓN	DENOMINATION
1	164350	SELF-LOCKING NUT DIN985-8 B.TRI.M14	TUER.AUTOB.DIN985-8 B.TRI.M14	ECROU AUTOBLOCANT DIN985-8 B.TRI.M14
2	149393	BICR WASHER B DIN125-ST 15	ARAN.B DIN125-ST B.TRI.15	RONDELLE B BICR DIN125-ST 15
3	307025	FLEXIBLOC 14X27X45X40ATC265042	FLEXIBLOC 14X27X45X40ATC265042	FLEXIBLOC 14X27X45X40ATC265042
4	294769	SUSPENSION HINGE	CHARNELA SUSPENSION	CHARNIERE SUSPENSION
5	316760	HEX.BIC.SCREW DIN931-8 M14X 90	TOR.EX.DIN931-8.8 B.TRI.M14X90	VIS HEX DIN931-8.8 BIC.M14X 90
6	150649	SELF-LOCKING NUT DIN985-8 B.TRI.M10	TUER.AUTOB.DIN985-8 B.TRI.M10	ECROU AUTOBLOCANT DIN985-8 B.TRI.M10
7	150250	BICR HEX.NUT DIN 934-8 M 14	TUER.EX.DIN934-8 B.TRI.M14	ECROU HEX.BICR DIN 934-8 M 14
8	217133	WASHER 27X10.3X3	ARANDELA 27X10.3X3 INOX	RONDELLE 27X10.3X3
9	294710	SUSPENSION CLAMP	BRIDA SUSPENSION	BRIDE SUSPENSION
10	294751	CLAMP SUPPLEMENT	SUPLEMENTO BRIDA	SUPPLEMENT BRIDE
11	294728	SUSPENSION BAR	VARILLA SUSPENSION	BAGUETTE SUSPENSION
12	316737	SUSPENSION SPRING	MUELLE SUSPENSION	RESSORT SUSPENSION
13	294777	WASHER 33X15X5	ARANDELA 33X15X5 TRIVALEN.	RONDELLE 33X15X5
14	504464	SUSPENSION PIECE	HORQUILLA SUSPENSION	PIECE SUSPENSION
15	294744	SUSPENSION SLEEVE	CASQUILLO SUSPENSION	FRETTE SUSPENSION
16	146266	BICR.HEX SCREW DIN933-8 M-4X15	TOR.EX.DIN933-4.8 B.TRI.M 4X15	VIS HEX BICR.DIN933-8.8 M-4X15
17	283200	MICRO PROTECTION FIXING-PIECE	FIJACION PROTECCION MICRO.	FIXATION PROTECTION MICRO
18	281113	MICROSWITCH ISOLATION	AISLANTE MICRORRUPTOR	ISOLANT MICRORRUPTEUR
19	197046	MINISWITCH 83161.344 I W3	MINIRRUPTOR 83161.344 I W3	MINIRRUPTEUR 83161.344 I W3
20	219758	INOX WASHER 12X4X1,5	ARANDELA 12X4X1.5 INOX	RONDELLE 12X4X1,5 INOX
21	261784	MICROSWITCH DRIVE BRACKET	SOPORTE ACCIONADOR MICRORRUP.	SUPPORT ACTIONNEMENT MICRORRUP
22	149484	BICR.WASHER B DIN125-ST 3,2	ARAN.B DIN125-ST B.TRI. 3,2	RONDELLE B.DIN125-ST BICR. 3,2
23	149906	INOX. HEX. NUT DIN 934 M-3	TUER.EX.DIN934 INOX A2-70 M 3	ECROU HEX. INOX DIN934 M-3
24	189407	MICROSWITCH DRIVE	ACCIONADOR MICRORRUPTOR	ACCIONNEMENT MICRORRUPTEUR
25	175364	PLASTIC SEPARATOR 6MM SP78/10	SEPARADOR PLASTICO 6MM.SP78/10	SEPARATEUR PLASTIQUE 6MM
26	189399	MICROSWITCH DRIVE SPRING	MUELLE ACCIONADOR MICRORRUPTOR	RESSORT ACTIONNEMENT MICRORRUP
27	147918	QUICK FIXING 211039-6	SUJEC.RAPIDA MIKALOR 211039-6	FIXATION RAPIDE 211039-6
28	278051	MICRO.DRIVE SLEEVE	CASQUILLO ACCIONADOR MICRO	FRETTE ACTIONNEMENT MICRO

info@zipnasklade.ru
8(800)500-69-51

Nº	REF	DENOMINATION	DENOMINACIÓN	DENOMINATION
29	278085	MICRO ACTIV. END-PIECE BRACKET	SOPORTE TOPE ACCIONADOR MICRO.	SUPPORT ARRET ACCIONNAT.MICRO
30	115733	WASHER 16X7X3	ARANDELA 16X7X3 TRIVALEN.	RONDELLE 16X7X3
31	134924	QUICK FIXING 211044-1	SUJEC.RAPIDA MIKALOR 211044-1	FIXATION RAPIDE 211044-1
32	132043	SELF-LOCKING NUT DIN985-8 B.TRI.M 4	TUER.AUTOBL.DIN985-8 B.TRI.M 4	ECROU AUTOBLOCANT DIN985-8 B.TRI.M 4
33	149476	BICR.WASHER B DIN125-ST 4,3	ARAN.B DIN125-ST B.TRI. 4,3	RONDELLE B DIN125-ST BICR.4,3
34	146233	BICR.HEX SCREW DIN933-8 M6X15	TOR.EX.DIN933-8.8 B.TRI.M 6X15	VIS HEX DIN933-8.8 BICR.M6X15
35	278069	MICROSWITH ACTIVATOR END-PIECE	TOPE ACCIONADOR MICRORRUPTOR	ARRET ACCIONNATEUR MICROINT.
36	302554	CYL.BICR.SCREW DIN84-4.8 M3X25	TOR.CIL.DIN84-4.8 B.TRI.M 3X25	VIS.CYL DIN84-4.8 BICR M 3X25
37	283192	MICROSWITCH PROTECTION COVER	TAPA PROTECCION MICRORRUPTOR	COUVERCLE PROT. MICRORRUPTEUR
38	191684	HEX SCREW 8G DIN931 M 8X 80	TOR.EX.DIN931-8.8 B.TRI.M 8X80	VIS HEX 8G DIN931 M 8X 80
39	149518	BICR.WASHER B DIN125-ST 8,4	ARAN.B DIN125-ST B.TRI. 8,4	RONDELLE.B DIN125-ST BICR.8,4
40	164285	SELF-LOCKING NUT DIN985-8 B.TRI.M8	TUER.AUTOBL.DIN985-8 B.TRI.M8	ECROU AUTOBLOCANT DIN985-8 B.TRI.M8
41	501965	HEX SCREW 8G DIN931 M 8X 60	TOR.EX.DIN931-8.8 B.TRI.M 8X60	VIS HEX 8G DIN931 M 8X 60
42	333476	SHOCK-ABSORBER SUSPA RD10 120N	AMORTIGUADOR SUSPA RD10 120N	AMORTISSEUR SUSPA RD10 120N
43	354480	SUSPENDED CHASSIS	CHASIS FLOTANTE	CHASSIS SUSPENDU
44	452508	FIXED CHASSIS	CHASIS FIJO	CHASSIS FIXE
45	149351	INOX A2 WASHER DIN 125 8,4	ARAN. DIN125 INOX A2 8,4	RONDELLE INOX A2 DIN 125 8,4
46	144964	INOX HEX SCREW DIN 933 M-8X16	TOR.EX.DIN933INOX A2-70 M 8X16	VIS HEX INOX DIN 933 M-8X16
47	451609	DRAIN BRACKET	SOPORTE DESAGÜE	SUPPORT VIDANGE
48	290981	SIDE PANEL FIXATION	FIJACION TAPAS LATERALES	FIXATION COUVERCLES LATERAUX
49	149518	BICR.WASHER B DIN125-ST 8,4	ARAN.B DIN125-ST B.TRI. 8,4	RONDELLE.B DIN125-ST BICR.8,4
50	166652	BIC.HEX SCREW DIN933-8.8 M8X15	TOR.EX.DIN933-8.8 B.TRI.M 8X15	VIS HEX DIN933-8.8 BICR. M8X15
51	146274	BICR.HEX SCREW DIN933-8 M-5X10	TOR.EX.DIN933-8.8 B.TRI.M 5X10	VIS HEX.BICR.DIN933-8.8 M-5X10
52	149534	BICR.WASHER B DIN125-ST 5,3	ARAN.B DIN125-ST BICR. 5,3	RONDELLE B BICR.DIN125-ST 5,3
53	245142	CLAMP	BRIDA	BRIDE
54	150235	BICR.HEX NUT DIN 934-8 M-12	TUER.EX.DIN934-8 B.TRI.M12	ECROU HEX DIN 934-8 BICR.M-12
55	157354	HEX SCREW 8G DIN 933 M-12X45	TOR.EX.DIN933-8.8 B.TRI.M12X45	VIS HEX 8G DIN 933 M-12X45
56	456632	WIRETHROUGH CHANNEL	CANAL PASACABLES	CHANNEL PASSECABLES

info@zipnasklade.ru
8(800)500-69-51

Nº	REF	DENOMINATION	DENOMINACIÓN	DENOMINATION
57	455238	WIRETHROUGH CHANNEL	CANAL PASACABLES	CHANNEL PASSECABLES

info@zipnasklade.ru
8(800)500-69-51

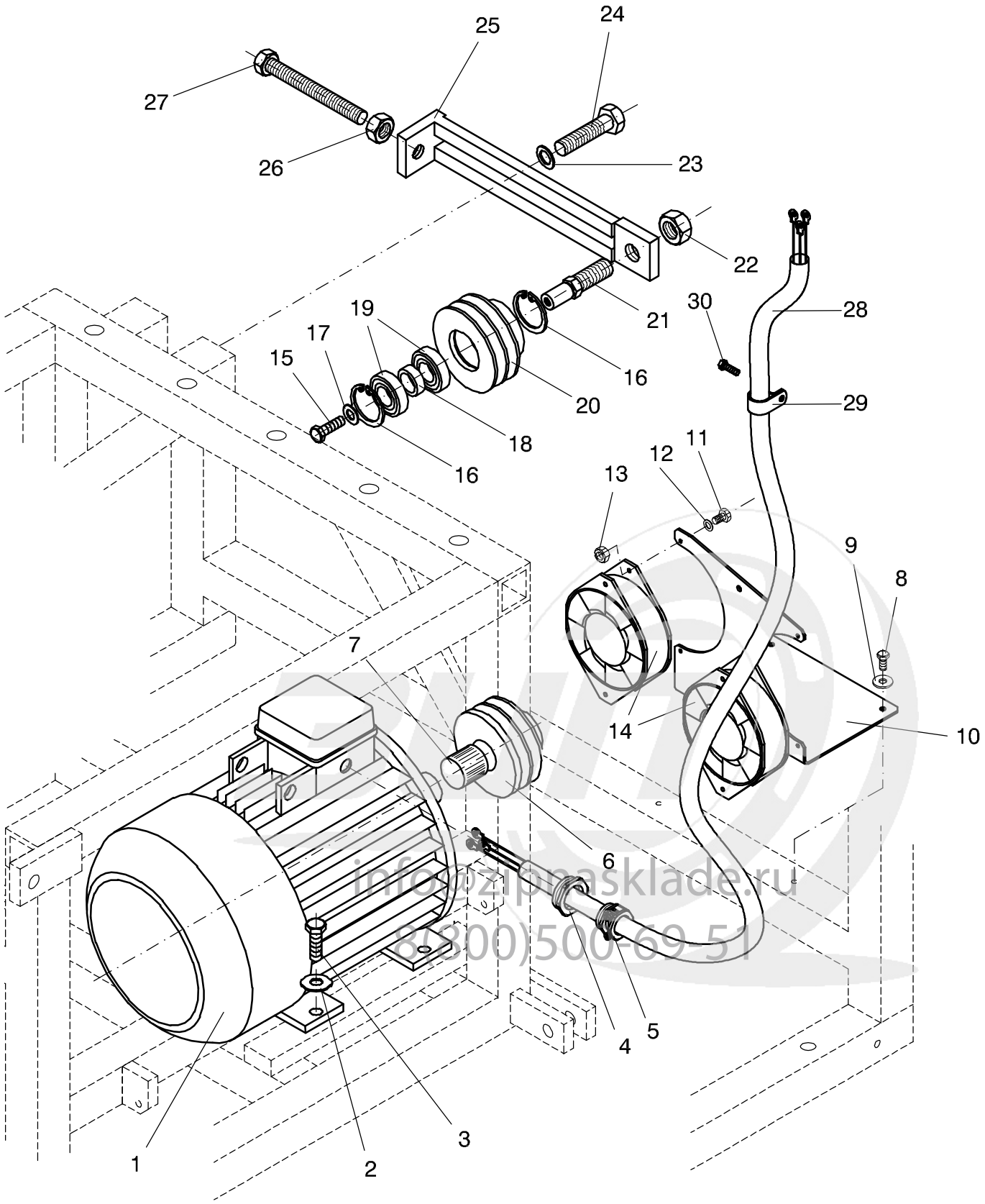

info@zipmasklade.ru
8(800)500-69-51

Nº	REF	DENOMINATION	DENOMINACIÓN	DENOMINATION
1	320952	MOTOR MT125-170/4	MOTOR MT125-170/4	MOTEUR MT125-170/4
	128678	BEARING 6308-2Z/C3	RODAMIENTO 6308-2Z/C3	ROULEMENT 6308-2Z/C3
2	115428	WASHER 30X10,5X3	ARANDELA 30X10,5X3 TRIVALEN.	RONDELLE 30X10,5X3
3	147017	BICR.HEX SCREW DIN933-8 M10X40	TOR.EX.DIN933-8.8 B.TRI.M10X40	VIS HEX DIN933-8,8 BICR.M10X40
4	140384	REDUCER PG 21-16	REDUCTOR 211604 PG 21-16	REDUCTEUR PG 21-16
5	197418	STUFFING-BOX EXAD.CLAMP PG16	PRENSAE.EXAD.BRIDA 81604 PG16*	PRESSE-ETOUPES EXAD.BRIDE PG16
6	320960	MOTOR PULLEY	POLEA MOTOR	POULIE MOTEUR
7	321190	STAR TOLERANCE RING	ANILLO TOLER.STAR 0820-040-06	BAGUE TOLERANCE STAR
8	146233	BICR.HEX SCREW DIN933-8 M6X15	TOR.EX.DIN933-8.8 B.TRI.M 6X15	VIS HEX DIN933-8.8 BICR.M6X15
9	149526	BICR.WASHER B DIN125-ST 6,4	ARAN.B DIN125-ST B.TRI. 6,4	RONDELLE B DIN125-ST BICR.6,4
10	447284	FAN BRACKET	SOPORTE VENTILADORES	SUPPORT VENTILATEURS
11	146266	BICR.HEX SCREW DIN933-8 M-4X15	TOR.EX.DIN933-4.8 B.TRI.M 4X15	VIS HEX BICR.DIN933-8.8 M-4X15
12	149476	BICR.WASHER B DIN125-ST 4,3	ARAN.B DIN125-ST B.TRI. 4,3	RONDELLE B DIN125-ST BICR.4,3
13	132043	SELF-LOCKING NUT DIN985-8 B.TRI.M 4	TUER.AUTOBL.DIN985-8 B.TRI.M 4	ECROU AUTOBLOCANT DIN985-8 B.TRI.M 4
14	321083	FAN	VENT.NMB 5915PC-23T-B30-A00	VENTILATEUR
15	146480	BICR.HEX SCREW DIN933-8 M10X20	TOR.EX.DIN933-8.8 B.TRI.M10X20	VIS HEX BICR.DIN933-8 M 10X20
16	131557	FLEXIBLE RING I-47 DIN 472	ANILLO ELASTICO I- 47 DIN 472	BAGUE ELASTIQUE I-47 DIN 472
17	115428	WASHER 30X10,5X3	ARANDELA 30X10,5X3 TRIVALEN.	RONDELLE 30X10,5X3
18	244509	TIGHTENER BEARING SEPARATOR	SEPARADOR COJINETES TENSOR	SEPARATEUR ROULEMENTS TENDEUR
19	128512	BEARING 6005-2Z	RODAMIENTO 6005-2Z	ROULEMENT 6005-2Z
20	219048	TIGHTENER PULLEY	POLEA TENSORA	POULIE TENDEUSE
21	218941	TIGHTENER PULLEY SHAFT	MUÑON POLEA TENSOR	AXE POULIE TENDEUR
22	150326	BICR.HEX NUT DIN 934-8 M 24	TUER.EX.DIN934-8 B.TRI.M24	ECROU HEX BICR DIN 934-8 M 24
23	219071	WASHER 40X15X5	ARANDELA 40X15X5 TRIVALEN.	RONDELLE 40X15X5
24	176172	HEX SCREW DIN 933 8,8 M14x55 TRIVALENT	TORNILLO HEXAGONAL DIN 933 8,8 M14x55 TR	VIS HEXAGONALE DIN 933 8,8 M14x55 TRIVAL
25	408674	TIGHTENER	TENSOR	TENDEUR
26	150250	BICR HEX.NUT DIN 934-8 M 14	TUER.EX.DIN934-8 B.TRI.M14	ECROU HEX.BICR DIN 934-8 M 14
27	219014	TIGHTENER SCREW	TORNILLO TENSOR	VIS TENDEUR

info@zipnasklade.ru
8(800)500-69-51

Nº	REF	DENOMINATION	DENOMINACIÓN	DENOMINATION
28	505750	ELEC. INST. MOTOR	INST. ELEC. MOTOR	INST. ELEC. MOTEUR
29	521443	CEM S-6 CLAMP	ABRAZADERA CEM S-6	BRIDE CEM S-6
30	144279	ALLEN SCREW DIN 912 M-5X15	TOR.ALLDIN912-8.8 B.TRI.M 5X15	VIS ALLEN DIN 912 M-5X15

info@zipnasklade.ru
8(800)500-69-51

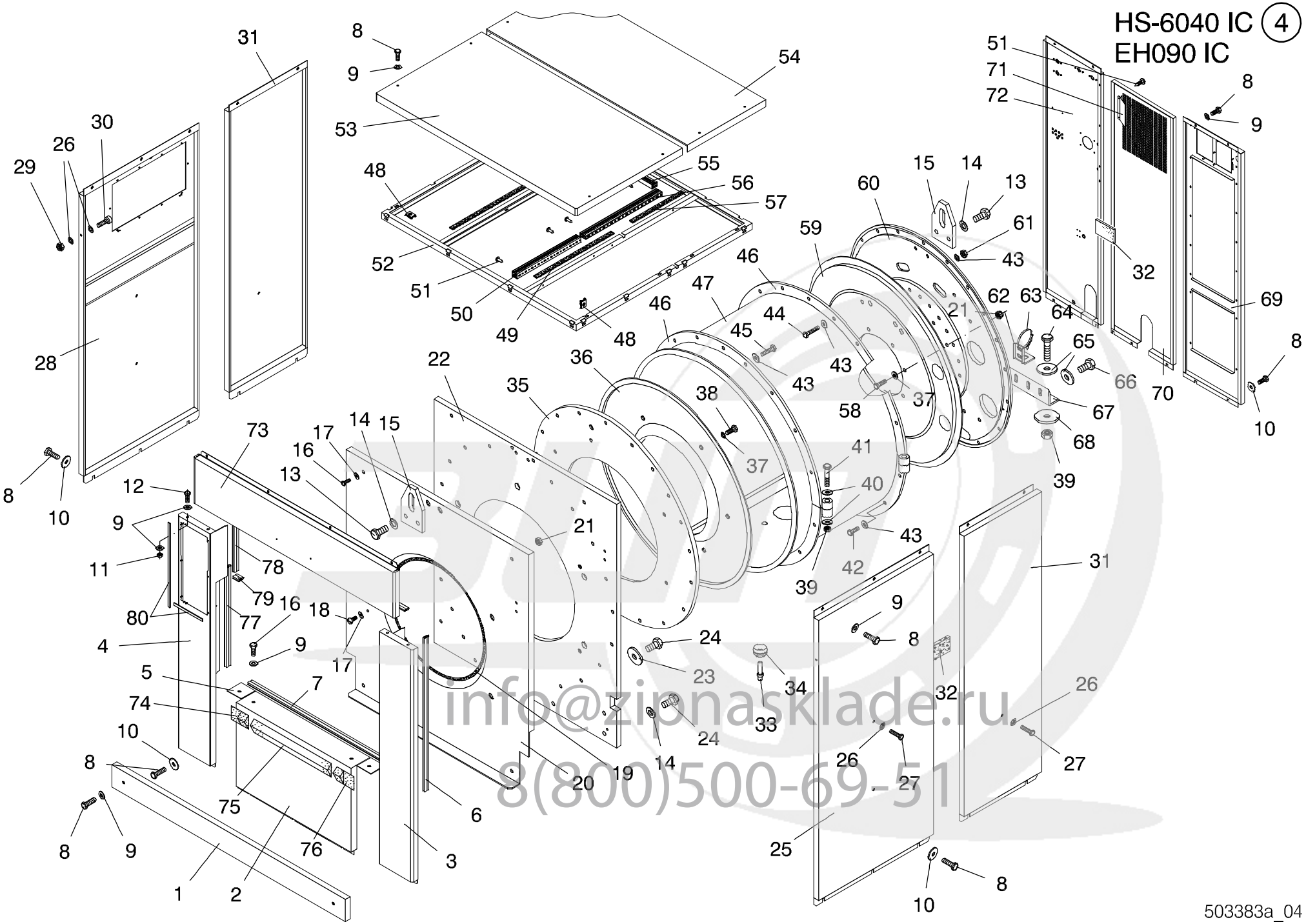

info@zipnasklade.ru
8(800)500-69-51

Nº	REF	DENOMINATION	DENOMINACIÓN	DENOMINATION
1	453878	BASE	ZOCALO	SOCLE
2	547851	LOWER FRONT COVER (INOX)	T. FRONTAL INFERIOR INOX (INOX)	COUVERCLE FRONTAL INFERIEUR (INOX)
	547869	LOWER FRONT COVER (PRE-COATED)	T. FRONTAL INFERIOR PRECOATED (PRE-COATED)	COUVERCLE FRONTAL INFERIEUR (PRE-COATED)
3	547836	RIGHT FRONT COVER (INOX)	TAPA FRONTAL DERECHA (INOX)	COUVERCLE FRONTAL DROIT (INOX)
	547844	RIGHT FRONT COVER (PRE-COATED)	TAPA FRONTAL DERECHA (PRE-COATED)	COUVERCLE FRONTAL DROIT (PRE-COATED)
4	547661	LEFT FRONT COVER SET (INOX)	CONJUNTO TAPA FRONTAL IZQ. (INOX)	ENSEM. COUVERCLE FRONTAL GAU. (INOX)
	547679	LEFT FRONT COVER SET (PRE-COATED)	CONJUNTO TAPA FRONTAL IZQ. (PRE-COATED)	ENSEM. COUVERCLE FRONTAL GAU. (PRE-COATED)
5	548024	LOWER COVER SUPPLEMENT	SUPLEMENTO TAPA INFERIOR	SUPPLEMENT COUVERCLE INFERIEUR
6	455170	RIGHT & LEFT FRONT PROFILE	PERFIL FRONTAL DER. E IZQ.	PROFILE FRONTAL DROIT ET GAUCHE
7	278713	LOWER FRONT PROFILE	PERFIL FRONTAL INFERIOR	PROFILE FRONTAL INFERIEUR
8	166652	BIC.HEX SCREW DIN933-8.8 M8X15	TOR.EX.DIN933-8.8 B.TRI.M 8X15	VIS HEX DIN933-8.8 BICR. M8X15
9	149518	BICR.WASHER B DIN125-ST 8,4	ARAN.B DIN125-ST B.TRI. 8,4	RONDELLE.B DIN125-ST BICR.8,4
10	358101	WASHER PL.DIN9021 24X8.4X2ST.TRI	ARAN.PL.DIN9021 24X8.4X2ST.TRI	ROND.PL.DIN9021 24X8.4X2ST.TRI
11	164285	SELF-LOCKING NUT DIN985-8 B.TRI.M8	TUER.AUTOBL.DIN985-8 B.TRI.M8	ECROU AUTOBLOCANT DIN985-8 B.TRI.M8
12	146399	BICR HEX SCREW DIN933-8 M8X20	TOR.EX.DIN933-8.8 B.TRI.M 8X20	VIS HEX DIN933-8.8 BICR.M8X20
13	175786	BIC.HEX SCREW DIN933-8.M16X40	TOR.EX.DIN933-8.8 B.TRI.M16X40	VIS HEX.DIN933-8,8 BICR M16X40
14	149385	BICR.WASHER B DIN125-ST 17	ARAN.B DIN125-ST B.TRI.17	RONDELLE B DIN125-ST BICR.17
15	438721	LOADING HOOK	GANCHO DE CARGA	CROCHET DE CHARGEMENT
16	144964	INOX HEX SCREW DIN 933 M-8X16	TOR.EX.DIN933INOX A2-70 M 8X16	VIS HEX INOX DIN 933 M-8X16
17	149351	INOX A2 WASHER DIN 125 8,4	ARAN. DIN125 INOX A2 8,4	RONDELLE INOX A2 DIN 125 8,4
18	145342	SCREW DIN 85 M8X20	TOR.ALOM.INOX DIN 85 M 8X20	VIS DIN 85 M8X20
19	165472	ETHILENE-PROP. PROFILE	PERFIL ETILENO-PROP.REF.44117L	PROFILE ETHILENE-PROP.
20	294991	FRONT PANEL	TAPA FRONTAL	COUVERCLE FRONTAL
21	150649	SELF-LOCKING NUT DIN985-8 B.TRI.M10	TUER.AUTOB.DIN985-8 B.TRI.M10	ECROU AUTOBLOCANT DIN985-8 B.TRI.M10
22	294371	FRONT PLATE	PLACA FRONTAL	PLAQUE FRONTAL

info@zipnasklade.ru
8(800)500-69-51

Nº	REF	DENOMINATION	DENOMINACIÓN	DENOMINATION
23	269126	WASHER 60X17X12	ARANDELA 60X17X12 TRIVALEN.	RONDELLE 60X17X12
24	175711	HEX SCREW 8G DIN 931 M-16X90	TOR.EX.DIN931-8.8 B.TRI.M16X90	VIS HEX 8G DIN 931 M-16X90
25	502468	RIGHT FRONT SIDE PANEL (INOX)	TAPA LATERAL ANTERIOR DERECHA (INOX)	COUVERCLE LATERAL AVANT DROITE (INOX)
	502484	RIGHT FRONT SIDE PANEL (PRE-COATED)	TAPA LATERAL ANTERIOR DERECHA (PRE-COATED)	COUVERCLE LATERAL AVANT DROITE (PRE-COATED)
26	149526	BICR.WASHER B DIN125-ST 6,4	ARAN.B DIN125-ST B.TRI. 6,4	RONDELLE B DIN125-ST BICR.6,4
27	146233	BICR.HEX SCREW DIN933-8 M6X15	TOR.EX.DIN933-8.8 B.TRI.M 6X15	VIS HEX DIN933-8.8 BICR.M6X15
28	502377	LEFT FRONT SIDE PANEL (INOX)	TAPA LATERAL ANTERIOR IZQUIER. (INOX)	COUVERCLE LATERAL AVANT GAUCHE (INOX)
	502450	LEFT FRONT SIDE PANEL (PRE-COATED)	TAPA LATERAL ANTERIOR IZQUIER. (PRE-COATED)	COUVERCLE LATERAL AVANT GAUCHE (PRE-COATED)
29	176834	SELF-LOCKING NUT DIN985-8 B.TRI.M6	TUER.AUTOBL.DIN985-8 B.TRI.M6	ECROU AUTOBLOCANT DIN985-8 B.TRI.M6
30	146233	BICR.HEX SCREW DIN933-8 M6X15	TOR.EX.DIN933-8.8 B.TRI.M 6X15	VIS HEX DIN933-8.8 BICR.M6X15
31	453472	REAR SIDE COVER (INOX)	TAPA LATERAL POSTERIOR (INOX)	COUVERCLE LATERAL ARRIERE (INOX)
	453480	REAR SIDE COVER (PRE-COATED)	TAPA LATERAL POSTERIOR (PRE-COATED)	COUVERCLE LATERAL ARRIERE (PRE-COATED)
32	219543	ANTI-VIBRATION PIECE	PIEZA ANTI-VIBRACION	PIECE ANTI-VIBRATION
33	193862	NTC RESISTANCE	RESISTENCIA NTC	RESISTANCE NTC
34	256149	SENSOR SHEATH LODGING	PASAMUROS SENSOR	LOGEMENT SENSEUR
35	294389	OUTER-DRUM FRONT CROWN	CORONA FRONTAL ENVOLVENTE	COURRONE FRONTAL CUVE
36	294421	OUTER-DRUM FRONT PANEL	FRONTAL ENVOLVENTE	FRONTAL CUVE
37	175273	USIT GASKET TYPE UA 16X10X1,5	JUNTA USIT TIPO UA 16X10X1,5	JOINT USIT TYPE UA 16X10X1,5
38	145003	INOX HEX SCREW DIN 933 M-10X50	TOR.EX.DIN933INOX A2-70 M10X50	VIS HEX INOX DIN 933 M-10X50
39	164350	SELF-LOCKING NUT DIN985-8 B.TRI.M14	TUER.AUTOB.DIN985-8 B.TRI.M14	ECROU AUTOBLOCANT DIN985-8 B.TRI.M14
40	149393	BICR WASHER B DIN125-ST 15	ARAN.B DIN125-ST B.TRI.15	RONDELLE B BICR DIN125-ST 15
41	175703	HEX SCREW 8G DIN 931 M-14X100	TOR.EX.DIN931-8.8B.TRI.M14X100	VIS HEX 8G DIN 931 M-14X100
42	176883	BIC.HEX SCREW DIN933-8 M12X35	TOR.EX.DIN933-8.8 B.TRI.M12X35	VIS HEX DIN933-8,8 BICR.M12X35
43	278853	WASHER 30X12,5X4	ARANDELA 30X12,5X4 TRIVALEN.	RONDELLE 30X12,5X4
44	146985	HEX SCREW 8G DIN933 M-12X55	TOR.EX.DIN933-8.8 B.TRI.M12X55	VIS HEX. 8G DIN933 M-12X55

info@zipnasklade.ru
8(800)500-69-51

Nº	REF	DENOMINATION	DENOMINACIÓN	DENOMINATION
45	146688	BI HEX.SCREW DIN933-8. M12X 50	TOR.EX.DIN933-8.8 B.TRI.M12X50	VIS HEX.DIN933-8.8 BICR.M12X50
46	294538	OUTER-DRUM FIXING RING	ARO FIJACION ENVOLVENTE	BAGUE FIXATION CUVE
47	452193	OUTER-DRUM	ENVOLVENTE	CUVE
48	354597	QUICK NUT TRT M8-1 0212829	TUER.RAPIDA TRT M8-1 0212829	ECROU RAPIDE TRT M8-1 0212829
49	454058	COVER ABSORBER PROFILE	PERFIL AMORTIGUADOR TAPA	PROFILE AMORTISSEUR COUVERCLE
50	453639	WIRETHROUGH CHANNEL	CANAL PASACABLES	CANAL PASSECABLES
51	183400	PLATE SCREW ST-4, 20 P.F. C/AL.T25	TORNILLO CHAPA ST-4 (ESPECIAL)*	VIS PLAQUE ST-4, 20 P.F. C/AL.T25
52	355032	UPPER FRAME	BASTIDOR SUPERIOR	BATI SUPERIEUR
53	454678	FRONT UPPER COVER	TAPA SUPERIOR ANTERIOR	COUVERCLE SUPERIEUR ANTERIEUR
54	453845	REAR UPPER COVER	TAPA SUPERIOR POSTERIOR	COUVERCLE SUPERIEUR ARRIERE
55	506378	WIRE-STOP DUCT	CANAL PASACABLES	CANAL PASSECABLES
56	506360	WIRE-STOP DUCT	CANAL PASACABLES	CANAL PASSECABLES
57	439000	COVER ABSORBER PROFILE	PERFIL AMORTIGUADOR TAPA	PROFILE AMORTISSEUR COUVERCLE
58	157271	INOX HEX SCREW DIN933 M10X35	TOR.EX.DIN933INOX A2-70 M10X35	VIS HEX INOX DIN933 M10X35
59	452441	OUTER-DRUM BOTTOM PLATE	FONDO ENVOLVENTE	FOND CUVE
60	294397	REAR PLATE	PLACA POSTERIOR	PLAQUE ARRIERE
61	150656	SELF-LOCKING NUT DIN985-8 B.TRI.M12	TUER.AUTOB.DIN985-8 B.TRI.M12	ECROU AUTOBLOCANT DIN985-8 B.TRI.M12
62	245142	CLAMP	BRIDA	BRIDE
63	140525	CLAMP 2244-0	BRIDA UNEX 2244-0 *	BRIDE 2244-0
64	147058	BICR.HEX.SCREW DIN931 M14X110	TOR.EX.DIN931-88 B.TRI.M14X110	VIS HEX.DIN931-8 BICRM M14X110
65	294512	WASHER 40X15X8	ARANDELA 40X15X8 TRIVALEN.	RONDELLE 40X15X8
66	186312	HEX SCREW 8G DIN933 M14X35	TOR.EX.DIN933-8.8 B.TRI.M14X35	VIS HEX 8G DIN933 M14X35
67	294520	REAR PLATE ANGLE	ANGULO PLACA POSTERIOR	ANGLE PLAQUE ARRIERE
68	290973	WASHER 50X15X10	ARANDELA 50X15X10 TRIVALEN.	RONDELLE 50X15X10
69	455089	RIGHT SIDE REAR COVER	TAPA POSTERIOR LATERAL DERECHA	COUVERCLE ARRIERE LATERAL DROITE
70	453514	CENTRAL REAR COVER	TAPA POSTERIOR CENTRAL	COUVERCLE ARRIERE CENTRAL
71	409599	PROTECTION SCREEN	PANTALLA PROTECCION	ÉCRAN PROTECTION
72	453506	LEFT SIDE REAR COVER	TAPA POSTERIOR LATERAL IZQDA.	COUVERCLE ARRIERE LATERAL GAUCHE

info@zipnasklade.ru
8(800)500-69-51

Nº	REF	DENOMINATION	DENOMINACIÓN	DENOMINATION
73	548057	UPPER FRONT COVER	TAPA FRONTAL SUPERIOR	COUVERCLE FRONTAL SUPERIEUR
74	174599	TERMINAL RE V-4 LEFT	TERMINAL REF.V-4 IZQUIERDA	TERMINAL REF V-4 GAUCHE
75	554477	PROTECTION PROFILE	PERFIL PROTECCION	PROFILE PROTECTION
76	174581	TERMINAL RE. V-4 RIGHT	TERMINAL REF.V-4 DERECHA	TERMINAL REF.V-4 DROITE
77	548081	RIGHT & LEFT FRONT PROFILE	PERFIL FRONTAL IZQUIERDO	PROFILE FRONTAL DROIT ET GAUCHE
78	548107	RIGHT & LEFT FRONT PROFILE	PERFIL FRONTAL IZQUIERDO	PROFILE FRONTAL DROIT ET GAUCHE
79	548115	RIGHT & LEFT FRONT PROFILE	PERFIL FRONTAL IZQUIERDO	PROFILE FRONTAL DROIT ET GAUCHE
80	110114	PROFILE EXTRA 5463GREY 6X9X4	BURL.AISLAN.TESA 5463-22 6X9X4	PROFILE EXTRA 5463GRIS 6X9X4

info@zipnasklade.ru
8(800)500-69-51

EH090 CC (4)

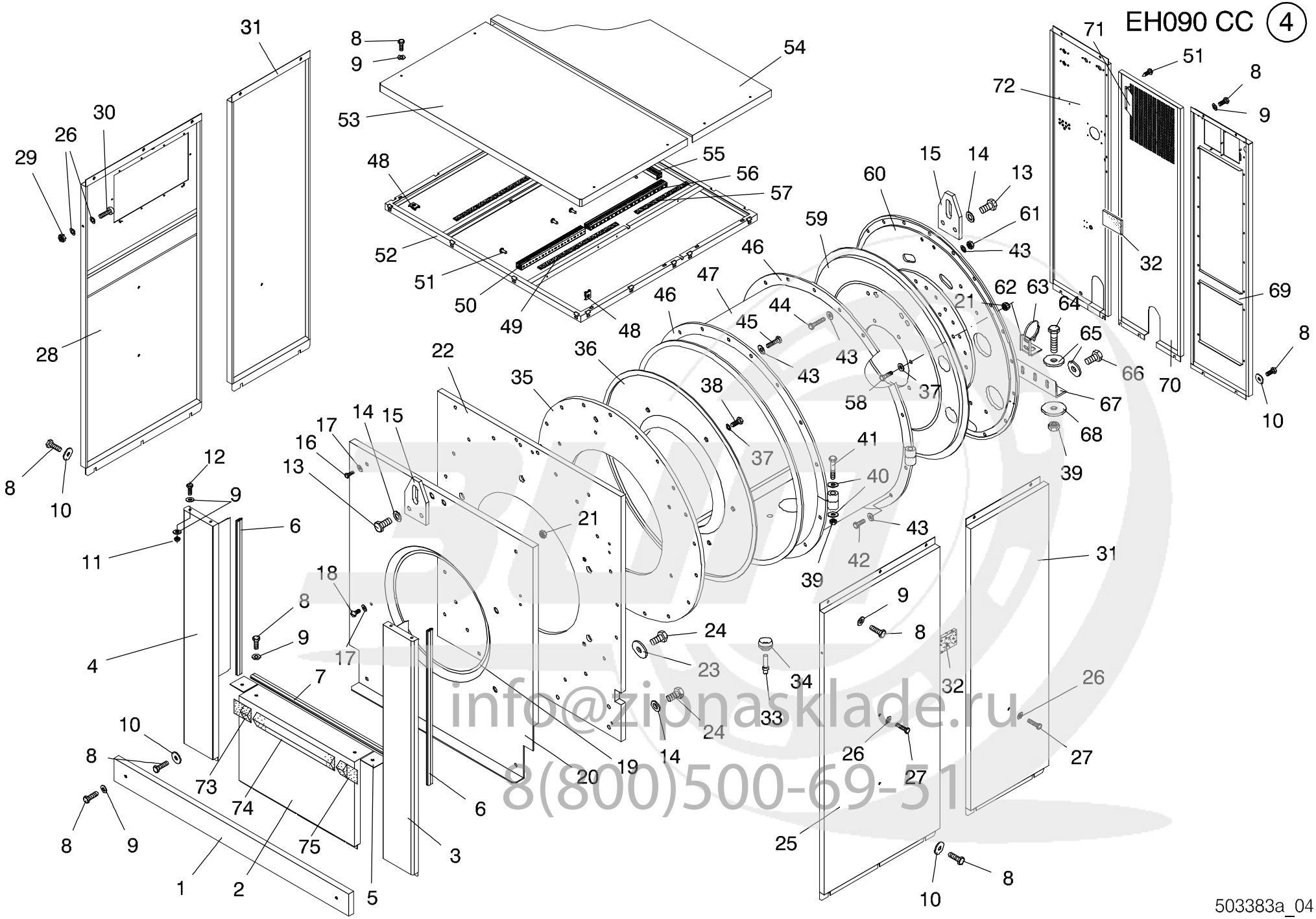

info@zipnasklade.ru
8(800)500-69-51

503383a_04

Nº	REF	DENOMINATION	DENOMINACIÓN	DENOMINATION
1	453878	BASE	ZOCALO	SOCLE
2	438945	LOWER FRONT COVER (INOX)	T. FRONTAL INFERIOR INOX (INOX)	COUVERCLE FRONTAL INFERIEUR (INOX)
	533117	LOWER FRONT COVER (PRE-COATED)	T. FRONTAL INFERIOR PRECOATED (PRE-COATED)	COUVERCLE FRONTAL INFERIEUR (PRE-COATED)
3	453134	RIGHT FRONT COVER (INOX)	TAPA FRONTAL DERECHA (INOX)	COUVERCLE FRONTAL DROIT (INOX)
	453233	RIGHT FRONT COVER (PRE-COATED)	TAPA FRONTAL DERECHA (PRE-COATED)	COUVERCLE FRONTAL DROIT (PRE-COATED)
4	606921	LEFT FRONT COVER (INOX)	TAPA FRONTAL IZQUIERDA (INOX)	COUVERCLE FRONTAL GAUCHE (INOX)
	530964	LEFT FRONT COVER (PRE-COATED)	TAPA FRONTAL IZQUIERDA (PRE-COATED)	COUVERCLE FRONTAL GAUCHE (PRE-COATED)
5	277814	LOWER COVER SUPPLEMENT	SUPLEMENTO TAPA INFERIOR	SUPPLEMENT COUVERCLE INFERIEUR
6	455170	RIGHT & LEFT FRONT PROFILE	PERFIL FRONTAL DER. E IZQ.	PROFILE FRONTAL DROIT ET GAUCHE
7	278713	LOWER FRONT PROFILE	PERFIL FRONTAL INFERIOR	PROFILE FRONTAL INFERIEUR
8	166652	BIC.HEX SCREW DIN933-8.8 M8X15	TOR.EX.DIN933-8.8 B.TRI.M 8X15	VIS HEX DIN933-8.8 BICR. M8X15
9	149518	BICR.WASHER B DIN125-ST 8,4	ARAN.B DIN125-ST B.TRI. 8,4	RONDELLE.B DIN125-ST BICR.8,4
10	358101	WASHER PL.DIN9021 24X8.4X2ST.TRI	ARAN.PL.DIN9021 24X8.4X2ST.TRI	ROND.PL.DIN9021 24X8.4X2ST.TRI
11	164285	SELF-LOCKING NUT DIN985-8 B.TRI.M8	TUER.AUTOBL.DIN985-8 B.TRI.M8	ECROU AUTOBLOCANT DIN985-8 B.TRI.M8
12	146399	BICR HEX SCREW DIN933-8 M8X20	TOR.EX.DIN933-8.8 B.TRI.M 8X20	VIS HEX DIN933-8.8 BICR.M8X20
13	175786	BIC.HEX SCREW DIN933-8.M16X40	TOR.EX.DIN933-8.8 B.TRI.M16X40	VIS HEX.DIN933-8,8 BICR M16X40
14	149385	BICR.WASHER B DIN125-ST 17	ARAN.B DIN125-ST B.TRI.17	RONDELLE B DIN125-ST BICR.17
15	438721	LOADING HOOK	GANCHO DE CARGA	CROCHET DE CHARGEMENT
16	144964	INOX HEX SCREW DIN 933 M-8X16	TOR.EX.DIN933INOX A2-70 M 8X16	VIS HEX INOX DIN 933 M-8X16
17	149351	INOX A2 WASHER DIN 125 8,4	ARAN. DIN125 INOX A2 8,4	RONDELLE INOX A2 DIN 125 8,4
18	145342	SCREW DIN 85 M8X20	TOR.ALOM.INOX DIN 85 M 8X20	VIS DIN 85 M8X20
19	165472	ETHILENE-PROP. PROFILE	PERFIL ETILENO-PROP.REF.44117L	PROFILE ETHILENE-PROP.
20	294991	FRONT PANEL	TAPA FRONTAL	COUVERCLE FRONTAL
21	150649	SELF-LOCKING NUT DIN985-8 B.TRI.M10	TUER.AUTOB.DIN985-8 B.TRI.M10	ECROU AUTOBLOCANT DIN985-8 B.TRI.M10
22	294371	FRONT PLATE	PLACA FRONTAL	PLAQUE FRONTAL

info@zipnasklade.ru
8(800)500-69-51

Nº	REF	DENOMINATION	DENOMINACIÓN	DENOMINATION
23	269126	WASHER 60X17X12	ARANDELA 60X17X12 TRIVALEN.	RONDELLE 60X17X12
24	175711	HEX SCREW 8G DIN 931 M-16X90	TOR.EX.DIN931-8.8 B.TRI.M16X90	VIS HEX 8G DIN 931 M-16X90
25	502468	RIGHT FRONT SIDE PANEL (INOX)	TAPA LATERAL ANTERIOR DERECHA (INOX)	COUVERCLE LATERAL AVANT DROITE (INOX)
	502484	RIGHT FRONT SIDE PANEL (PRE-COATED)	TAPA LATERAL ANTERIOR DERECHA (PRE-COATED)	COUVERCLE LATERAL AVANT DROITE (PRE-COATED)
26	149526	BICR.WASHER B DIN125-ST 6,4	ARAN.B DIN125-ST B.TRI. 6,4	RONDELLE B DIN125-ST BICR.6,4
27	146233	BICR.HEX SCREW DIN933-8 M6X15	TOR.EX.DIN933-8.8 B.TRI.M 6X15	VIS HEX DIN933-8.8 BICR.M6X15
28	502377	LEFT FRONT SIDE PANEL (INOX)	TAPA LATERAL ANTERIOR IZQUIER. (INOX)	COUVERCLE LATERAL AVANT GAUCHE (INOX)
	502450	LEFT FRONT SIDE PANEL (PRE-COATED)	TAPA LATERAL ANTERIOR IZQUIER. (PRE-COATED)	COUVERCLE LATERAL AVANT GAUCHE (PRE-COATED)
29	176834	SELF-LOCKING NUT DIN985-8 B.TRI.M6	TUER.AUTOBL.DIN985-8 B.TRI.M6	ECROU AUTOBLOCANT DIN985-8 B.TRI.M6
30	146233	BICR.HEX SCREW DIN933-8 M6X15	TOR.EX.DIN933-8.8 B.TRI.M 6X15	VIS HEX DIN933-8.8 BICR.M6X15
31	453472	REAR SIDE COVER (INOX)	TAPA LATERAL POSTERIOR (INOX)	COUVERCLE LATERAL ARRIERE (INOX)
	453480	REAR SIDE COVER (PRE-COATED)	TAPA LATERAL POSTERIOR (PRE-COATED)	COUVERCLE LATERAL ARRIERE (PRE-COATED)
32	219543	ANTI-VIBRATION PIECE	PIEZA ANTI-VIBRACION	PIECE ANTI-VIBRATION
33	193862	NTC RESISTANCE	RESISTENCIA NTC	RESISTANCE NTC
34	256149	SENSOR SHEATH LODGING	PASAMUROS SENSOR	LOGEMENT SENSEUR
35	294389	OUTER-DRUM FRONT CROWN	CORONA FRONTAL ENVOLVENTE	COURRONE FRONTAL CUVE
36	294421	OUTER-DRUM FRONT PANEL	FRONTAL ENVOLVENTE	FRONTAL CUVE
37	175273	USIT GASKET TYPE UA 16X10X1,5	JUNTA USIT TIPO UA 16X10X1,5	JOINT USIT TYPE UA 16X10X1,5
38	145003	INOX HEX SCREW DIN 933 M-10X50	TOR.EX.DIN933INOX A2-70 M10X50	VIS HEX INOX DIN 933 M-10X50
39	164350	SELF-LOCKING NUT DIN985-8 B.TRI.M14	TUER.AUTOB.DIN985-8 B.TRI.M14	ECROU AUTOBLOCANT DIN985-8 B.TRI.M14
40	149393	BICR WASHER B DIN125-ST 15	ARAN.B DIN125-ST B.TRI.15	RONDELLE B BICR DIN125-ST 15
41	175703	HEX SCREW 8G DIN 931 M-14X100	TOR.EX.DIN931-8.8B.TRI.M14X100	VIS HEX 8G DIN 931 M-14X100
42	176883	BIC.HEX SCREW DIN933-8 M12X35	TOR.EX.DIN933-8.8 B.TRI.M12X35	VIS HEX DIN933-8,8 BICR.M12X35
43	278853	WASHER 30X12,5X4	ARANDELA 30X12,5X4 TRIVALEN.	RONDELLE 30X12,5X4
44	146985	HEX SCREW 8G DIN933 M-12X55	TOR.EX.DIN933-8.8 B.TRI.M12X55	VIS HEX. 8G DIN933 M-12X55

info@zipnasklade.ru
8(800)500-69-51

Nº	REF	DENOMINATION	DENOMINACIÓN	DENOMINATION
45	146688	BI HEX.SCREW DIN933-8. M12X 50	TOR.EX.DIN933-8.8 B.TRI.M12X50	VIS HEX.DIN933-8.8 BICR.M12X50
46	294538	OUTER-DRUM FIXING RING	ARO FIJACION ENVOLVENTE	BAGUE FIXATION CUVE
47	452193	OUTER-DRUM	ENVOLVENTE	CUVE
48	354597	QUICK NUT TRT M8-1 0212829	TUER.RAPIDA TRT M8-1 0212829	ECROU RAPIDE TRT M8-1 0212829
49	454058	COVER ABSORBER PROFILE	PERFIL AMORTIGUADOR TAPA	PROFILE AMORTISSEUR COUVERCLE
50	453639	WIRETHROUGH CHANNEL	CANAL PASACABLES	CANAL PASSECABLES
51	183400	PLATE SCREW ST-4, 20 P.F. C/AL.T25	TORNILLO CHAPA ST-4 (ESPECIAL)*	VIS PLAQUE ST-4, 20 P.F. C/AL.T25
52	355032	UPPER FRAME	BASTIDOR SUPERIOR	BATI SUPERIEUR
53	454678	FRONT UPPER COVER	TAPA SUPERIOR ANTERIOR	COUVERCLE SUPERIEUR ANTERIEUR
54	453845	REAR UPPER COVER	TAPA SUPERIOR POSTERIOR	COUVERCLE SUPERIEUR ARRIERE
55	506378	WIRE-STOP DUCT	CANAL PASACABLES	CANAL PASSECABLES
56	506360	WIRE-STOP DUCT	CANAL PASACABLES	CANAL PASSECABLES
57	439000	COVER ABSORBER PROFILE	PERFIL AMORTIGUADOR TAPA	PROFILE AMORTISSEUR COUVERCLE
58	157271	INOX HEX SCREW DIN933 M10X35	TOR.EX.DIN933INOX A2-70 M10X35	VIS HEX INOX DIN933 M10X35
59	452441	OUTER-DRUM BOTTOM PLATE	FONDO ENVOLVENTE	FOND CUVE
60	294397	REAR PLATE	PLACA POSTERIOR	PLAQUE ARRIERE
61	150656	SELF-LOCKING NUT DIN985-8 B.TRI.M12	TUER.AUTOB.DIN985-8 B.TRI.M12	ECROU AUTOBLOCANT DIN985-8 B.TRI.M12
62	245142	CLAMP	BRIDA	BRIDE
63	140525	CLAMP 2244-0	BRIDA UNEX 2244-0 *	BRIDE 2244-0
64	147058	BICR.HEX.SCREW DIN931 M14X110	TOR.EX.DIN931-88 B.TRI.M14X110	VIS HEX.DIN931-8 BICRM M14X110
65	294512	WASHER 40X15X8	ARANDELA 40X15X8 TRIVALEN.	RONDELLE 40X15X8
66	186312	HEX SCREW 8G DIN933 M14X35	TOR.EX.DIN933-8.8 B.TRI.M14X35	VIS HEX 8G DIN933 M14X35
67	294520	REAR PLATE ANGLE	ANGULO PLACA POSTERIOR	ANGLE PLAQUE ARRIERE
68	290973	WASHER 50X15X10	ARANDELA 50X15X10 TRIVALEN.	RONDELLE 50X15X10
69	455089	RIGHT SIDE REAR COVER	TAPA POSTERIOR LATERAL DERECHA	COUVERCLE ARRIERE LATERAL DROITE
70	453514	CENTRAL REAR COVER	TAPA POSTERIOR CENTRAL	COUVERCLE ARRIERE CENTRAL
71	409599	PROTECTION SCREEN	PANTALLA PROTECCION	ÉCRAN PROTECTION
72	453506	LEFT SIDE REAR COVER	TAPA POSTERIOR LATERAL IZQDA.	COUVERCLE ARRIERE LATERAL GAUCHE

info@zipnasklade.ru
8(800)500-69-51

Nº	REF	DENOMINATION	DENOMINACIÓN	DENOMINATION
73	174599	TERMINAL RE V-4 LEFT	TERMINAL REF.V-4 IZQUIERDA	TERMINAL REF V-4 GAUCHE
74	242966	PROTECTION PROFILE	PERFIL PROTECCION	PROFILE PROTECTION
75	174581	TERMINAL RE. V-4 RIGHT	TERMINAL REF.V-4 DERECHA	TERMINAL REF.V-4 DROITE

info@zipnasklade.ru
8(800)500-69-51

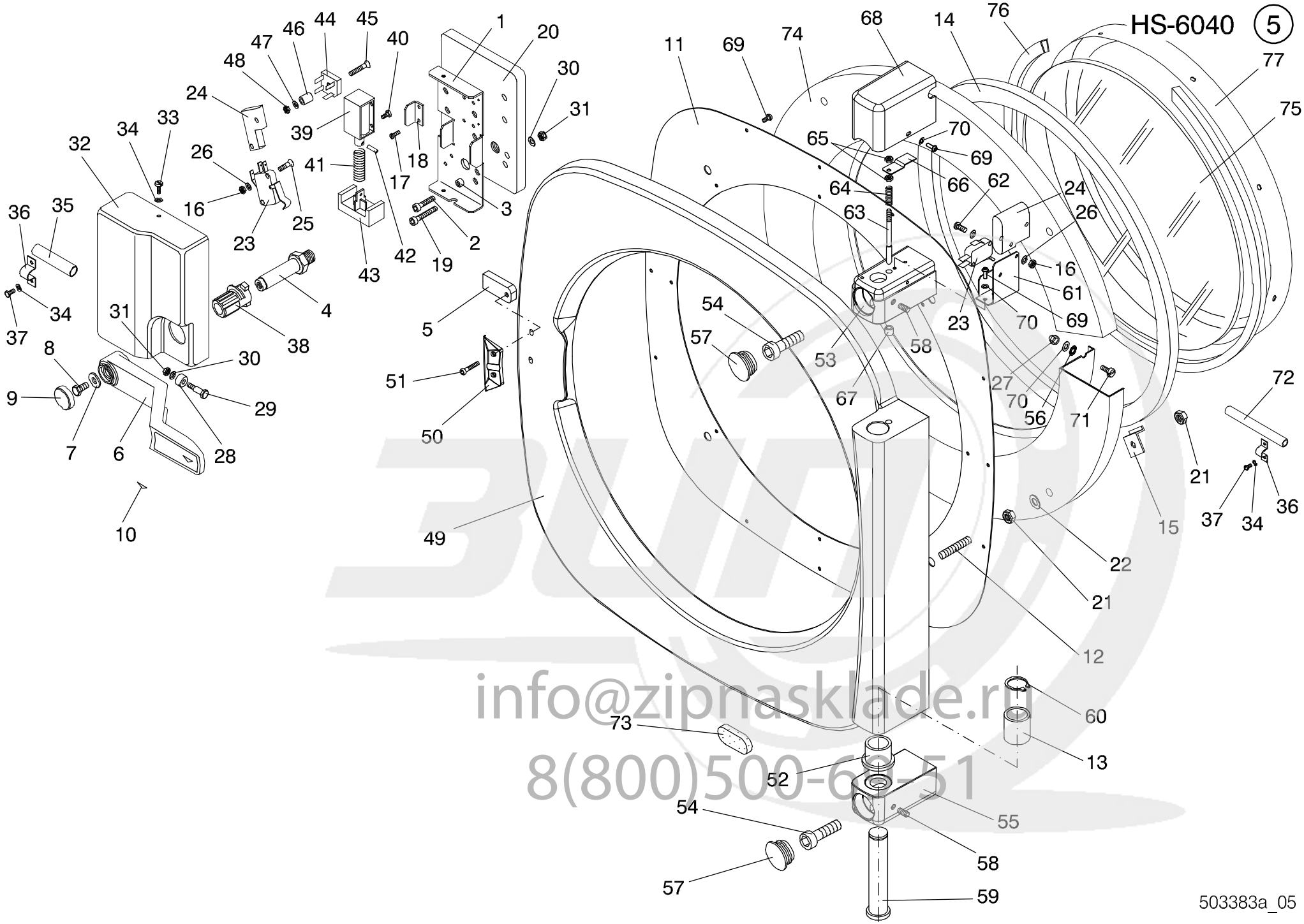

info@zipnasklade.ru
8(800)500-62-51

Nº	REF	DENOMINATION	DENOMINACIÓN	DENOMINATION
1	276469	SAFETY LOCK BRACKET	SOPORTE CIERRE SEGURIDAD	SUPPORT FERMETURE DE SECURITE
2	144352	ALLEN SCREW DIN912 M-6X25	TOR.ALLDIN912-8.8 B.TRI.M 6X25	VIS ALLEN DIN912 M-6X25
3	276527	LOCK END-PIECE	TOPE CIERRE	ARRET FERMETURE
4	276485	LOCK SHAFT	EJE CIERRE	AXE FERMETURE
5	506311	18X18 PLATE	PLETINA DE 18X8	PLAQUE DE 18X18
6	199257	KNOB	EMPUÑADURA	POIGNEE
7	115733	WASHER 16X7X3	ARANDELA 16X7X3 TRIVALEN.	RONDELLE 16X7X3
8	165621	BIC HEX SCREW DIN933-8,8 M6X10	TOR.EX.DIN933-8.8 B.TRI.M 6X10	VIS HEX DIN933-8,8 BICR M6X10
9	189993	KNOB STOPPER	TAPON EMPUÑADURA	BOUCHON POIGNEE
10	193599	KNOB PLATE	PLACA EMPUÑADURA	PLAQUE POIGNEE
11	438309	DOOR HOLDER	PORTA-MIRILLA	SUPPORT HUBLOT
12	290627	DOOR BUMP	ESPARRAGO ESCOTILLA	GOUJON HUBLOT
13	350561	SELFOIL SLEEVE B11A22-28-30	COJ. SELFOIL B11A22-28-30	FRETTE SELFOIL B11A22-28-30
14	176008	DOOR GASKET	JUNTA ESCOTILLA	JOINT HUBLOT
	342626	SILICON DOOR GASKET * (SPARE PARTS ONLY)	JUNTA ESCOTILLA SILICONA * (SOLO RECAMBIOS)	JOINT HUBLOT SILICON * (SEULEMENT PIECES DETACHEES)
15	216820	DOOR GASKET CLIP	GRAPA JUNTA ESCOTILLA	CLIP JOINT HUBLOT
16	149906	INOX. HEX. NUT DIN 934 M-3	TUER.EX.DIN934 INOX A2-70 M 3	ECROU HEX. INOX DIN934 M-3
17	146035	BICR CYL SCREW DIN84 M-3X10	TOR.CIL.DIN84-4.8 B.TRI.M 3X10	VIS CYL BICR DIN84-4.8 M 3X10
18	279810	LOCKING BOX COVER	TAPETA CAJA CIERRE	COUVERCLE BOITE FERMETURE
19	302331	ALLEN SCREW DIN912-8.8 BICR.	TOR.ALLDIN912-8.8 B.TRI.M 6X35	VIS ALLDIN912-8.8 BICR.M6X35
20	276543	LOCKING BASE	BASE CIERRE	BASE FERMETURE
21	149948	INOX. HEX. NUT DIN 934 M-12	TUER.EX.DIN934 INOX A2-70 M12	ECROU HEX. INOX. DIN 934 M-12
22	149302	INOX.A2 WASHER DIN 125 13	ARAN. DIN125 INOX A2 13	RONDELLE INOX.A2 DIN 125 13
23	279760	MICROSWITCH	MINIRRUPTOR	MICRORRUPTEUR
24	281113	MICROSWITCH ISOLATION	AISLANTE MICRORRUPTOR	ISOLANT MICRORRUPTEUR
25	303131	BICR.SCREW DIN963-4.8 M 3X 20	TOR.AV.DIN963-4.8B.TRI. M 3X20	VIS.T/FRAIS DIN963-4.8 B.M3X20
26	149484	BICR.WASHER B DIN125-ST 3,2	ARAN.B DIN125-ST B.TRI. 3,2	RONDELLE B.DIN125-ST BICR. 3,2
27	150151	INOX BLIND NUT DIN 1587 M-4	TUERCA CIE.INOX LAR.DIN1587M 4	ECROU AVEUGLE INOX DIN 1587 M4

info@zipnasklade.ru
8(800)500-69-51

Nº	REF	DENOMINATION	DENOMINACIÓN	DENOMINATION
28	276519	KNOB ROLL	RODILLO EMPUÑADURA	ROULEAU POIGNEE
29	276477	KNOB BOLT	BULON EMPUÑADURA	BOULON POIGNEE
30	149526	BICR.WASHER B DIN125-ST 6,4	ARAN.B DIN125-ST B.TRI. 6,4	RONDELLE B DIN125-ST BICR.6,4
31	176834	SELF-LOCKING NUT DIN985-8 B.TRI.M6	TUER.AUTOBL.DIN985-8 B.TRI.M6	ECROU AUTOBLOCANT DIN985-8 B.TRI.M6
32	199307	SAFETY LOCK BOX	CAJA CIERRE SEGURIDAD	BOITE FERMETURE SECURITE
33	300632	INOX A2-70 SCREW DIN85 M5X 8	TOR.PLA.DIN85 INOX A2-70 M5X 8	VIS DIN85 INOX A2-70 M5X 8
34	149369	INOX A2 WASHER DIN 125 5,3	ARAN. DIN125 INOX A2 5,3	RONDELLE INOX A2 DIN 125 5,3
35	278036	WIRE PROTECTION HOSE	TUBO PROTECCION CABLES	TUBE PROTECTION CABLES
36	276824	WIRE PROTECTION CLAMP	BRIDA PROTECCION CABLES	BRIDE PROTECTION CABLES
37	144774	INOX HEX SCREW DIN 933 M-5X10	TOR.EX.DIN933INOX A2-70 M 5X10	VIS HEX INOX DIN 933 M-5X10
38	283689	LOCK KNOB JOINTING	UNION EMPUÑADURA CIERRE	UNION POIGNEE FERMETURE
39	283697	SAFETY LOCK COIL	BOBINA CIERRE SEGURIDAD	BOBINE FERMETURE SECURITE
40	147561	SCREW DIN963-4.8 M 3X 7	TOR.AV.DIN963-4.8 B.TRI.M 3X 7	VIS DIN963-4.8 BICR M 3X 7
41	300665	COIL SPRING	MUELLE BOBINA	RESSORT BOBINE
42	150698	FLEXIBLE PIN DIN1481 D3X10	PASADOR ELASTICO DIN1481 D3X10	GOUJON ELASTIQUE DIN1481 D3X10
43	276402	SLIDING BLOCKER	BLOQUEADOR DESLIZANTE	BLOQUEUR COULISSANT
44	175224	RECTIFIER BRIDGE	PUENTE RECTIFICADOR *	PONT RECTIFIEUR
45	199240	BICR.SCREW DIN963-4.8 M4X30	TOR.AV.DIN963-4.8 B.TRI M 4X30	VIS T/FRAIS.DIN963-4 BIC.M4X30
46	300467	CYLINDER SEPARATOR SS10-4 CPVC	SEPARADOR CILINDR.SS10-4 CPVC	SEPARATEUR CYLINDR.SS10-4 CPVC
47	149476	BICR.WASHER B DIN125-ST 4,3	ARAN.B DIN125-ST B.TRI. 4,3	RONDELLE B DIN125-ST BICR.4,3
48	150185	BICR.HEX.NUT DIN934-8 M4	TUER.EX.DIN934-8 B.TRI.M 4	ECROU HEX.DIN934-8 BICR.M4
49	438259	DOOR	CUERPO ESCOTILLA	HUBLOT
50	604272	DOOR LOCK PIECE	PIEZA CIERRE SEGURIDAD	PIECE FERMETURE HUBLOT
51	144295	BICR.SCREW ALLEN912-8.8 M 5X25	TOR.ALLDIN912-8.8 B.TRI.M 5X25	VIS ALLDIN912-8.8 BICR.M 5X 25
52	174482	SELFOIL SLEEVE B11B22-28-25/33	COJ. SELFOIL B11B22-28-25/33-4	FRETTE SELFOIL B11B22-28-25/33
53	438283	HINGE	BISAGRA	CHARNIERE
54	175752	ALLEN SCREW DIN 912 M-20X60	TOR.ALLDIN912-8.8 B.TRI.M20X60	VIS ALLEN DIN 912 M-20X60
55	438291	HINGE	BISAGRA	CHARNIERE

info@zipnasklade.ru
8(800)500-69-51

Nº	REF	DENOMINATION	DENOMINACIÓN	DENOMINATION
56	116129	SCREW GASKET	JUNTA TORNILLO	JOINT VIS
57	176776	CONICAL END FIG. 26 D38	TOPE CONICO FIG.26 D38	ARRET CONIQUE FIG. 26 D38
58	175778	ALLEN BUMP DIN 916 M-8X15	ESP.ALL.DIN916-10.9 M 8X15	GOUJON ALLEN DIN 916 M-8X15
59	206995	DOOR BOLT	BULON ESCOTILLA	BOULON HUBLOT
60	174524	FLEXIBLE RING E-22 DIN 471	ANILLO ELASTICO E-22 DIN 471	BAGUE ELASTIQUE E-22 DIN 471
61	276857	MICROSWITCH BRACKET	SOPORTE MICRORRUPTOR	SUPPORT MICRORRUPTEUR
62	146043	BIC CYL SCREW DIN84-4,8 M3X16	TOR.CIL.DIN84-4.8 B.TRI.M 3X16	VIS CYL DIN84-4,8 BICR.M3X16
63	276907	MICROSWITCH ACTIVATOR BOLT	PERNO ACCIONADOR MICRORRUPTOR	BOULON ACCIONATEUR MICRORRUPT.
64	198069	SPRING	MUELLE COMPENSADOR	RESSORT
65	149922	INOX HEX. NUT DIN 934 M-4	TUER.EX.DIN934 INOX A2-70 M 4	ECROU HEX. INOX DIN 934 M-4
66	276873	MICROSWITCH DRIVE	ACCIONADOR MICRORRUPTOR	ACTIONNEMENT MICRORRUPTEUR
67	276840	GUIDE SLEEVE	CASQUILLO GUIA	FRETTE GUIDE
68	439430	PROTECTION COVER	TAPA PROTECCION	COUVERCLE PROTECTION
69	326116	SCREW 410TT85T 4X10 INOX	TORNILLO 410TT85T 4X10 INOX (ESPECIAL)	VIS 410TT85T 4X10 INOX
70	149328	INOX A2 WASHER DIN 125 4,3	ARAN. DIN125 INOX A2 4,3	RONDELLE INOX A2 DIN 125 4,3
71	145649	INOX FLAT SCREW DIN85 M 4X10	TOR.PLA.DIN85 INOX A2-70 M4X10	VIS PLAT INOX DIN85 M-4X10 A2
72	276899	WIRE PROTECTION HOSE	TUBO PROTECCION CABLES	TUBE PROTECTION CABLES
73	200212	DOOR END-PIECE	TOPE ESCOTILLA	ARRET HUBLOT
74	244202	DOOR RING	ARO ESCOTILLA	BAGUE HUBLOT
	244194	COMPLETE DOOR	ESCOTILLA COMPLETA	HUBLOT COMPLET
75	174912	GLASS SPYHOLE D519X5	MIRILLA CRISTAL D519+-1,5X5 *	VITRE D519X5
76	174920	NEOPRENE A PROFILE L.1635 MM	PERFIL A EPDM BLANCO 1635MM.	PROFILE NEOPRENE A L.1635 MM
77	244210	OUTER RING	ARO EXTERIOR	BAGUE EXTERIEUR

info@zipnasklade.ru
8(800)500-69-51

HS-6040 IC (6)
EH090 IC

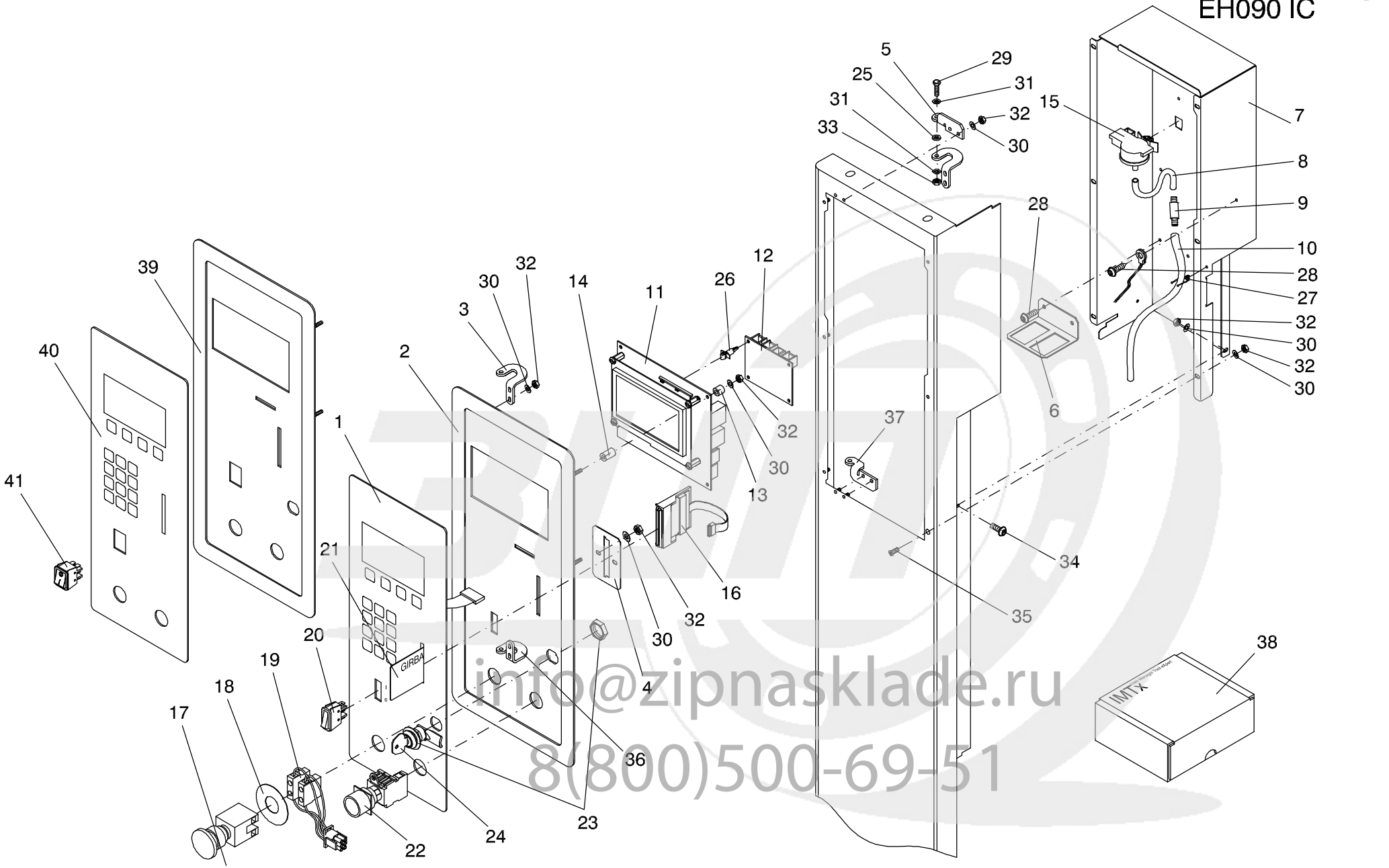

info@zipnasklade.ru
8(800)500-69-51

503383a_06

Nº	REF	DENOMINATION	DENOMINACIÓN	DENOMINATION
1	350215	KEYBOARD IC	TECLADO LAVADORA IC	CLAVIER IC
	350082	KEYBOARD IC (WITH TILTING) (WITH HELP)	TECLADO LAVADORA IC (CON VOLQUETE) (CON HELP)	CLAVIER IC (AVEC SOCLE BASCULANT) (AVEC HELP)
2	546937	SIDE CONTROL PANEL	PANEL DE MANDOS LATERAL	PANNEAU DE COMMANDES LATERAL
3	547547	CONTROL PANEL HINGE	BISAGRA PANEL DE MANDOS LAT.S.	CHARNIERE TABLEAU COMMANDE
4	423020	CARD FIXING-PIECE SMARTCARD	FIJACION TARJETA SMARTCARD	FIXATION TARGETTE SMARTCARD
5	547562	CONTROL PANEL HINGE	BISAGRA PANEL DE MANDOS SUP.	CHARNIERE TABLEAU COMMANDE
6	520924	CONNECTOR BRACKET	SOPORTE CONECTORAS	SUPPORT CONNECTEURS
7	547828	CONTROL PANEL BOX	CAJA PANEL DE MANDOS	BOITE PANNEAU DE COMMANDES
8	279588	AIR CONDUCTION HOSE	TUBO CONDUCCION AIRE	TUBE CONDUITE AIR
9	120956	LEVEL PRESSURE-SWITCH INTAKE	TOMA PRESOSTATO NIVEL	PRISE PRESSOSTAT NIVEAU
10	283523	PRESSOSTAT HOSE	TUBO PRESOSTATO	TUBE PRESSOSTAT
11	506808	SCREEN KIT LCD IC	CONJUNTO PANTALLA LCD IC	ENSEMBLE ÉCRAN LCD IC
12	565895	COMMUNICATION BOARD COM-C * (WITH COM)	PLACA COMUNICACIONES COM-C * (PARA COM)	PLAQUE COMMUNICATIONS COM-C/609164 (AVEC COM)
13	322768	MICRO BOARD SEPARATOR	SEPARADOR PLACA MICRO	SEPARATEUR PLAQUE MICRO
14	338038	MICRO BOARD SPACER	SEPARADOR PLACA MICRO	SEPARATEUR PLAQUE MICRO
15	322784	PRESSURE TRANSMITTER 400.95100	TRANSM.PRESION HUBA 400.95100	PRESSOSTAT HUBA 400.95100
16	332684	INTELI SMARTCARD SOCKET	ZOCALO TARJETA INTELI *	SOCLE TARGETTE SMARTCARD INTEL
17	341511	EMERGENCY STOP IC	PARO EMERGENCIA IC	ARRET EMERGENCE IC
18	192294	YELLOW RING	ARO AMARILLO	BAGUE JAUNE
19	447094	EMERGENCY STOP PLUG	CONECTORA PARO EMERGENCIA	CONNECTEUR ARRET EMERGENCE
20	300780	SWITCH C1500AL AAG WHITE	INTERRUPTOR C1500AL AAG	INTERRUPTEUR C1500AL AAG BLANC
21	340539	INTELI SMARTCARD CARD	TARJETA SMARTCARD INTELI	CARTE SMARTCARD INTELI
22	510677	TILT PUSH-BUTTON/HELP SERIAL-6 (WITH TILTING) (WITH HELP)	PULSADOR TILT/HELP SERIE-6 (CON VOLQUETE) (CON HELP)	BOUTON-POUSSOIR TILT/HELP SERIE-6 (AVEC SOCLE BASCULANT) (AVEC HELP)
23	196915	LOCK RE.20.00.02.05 (KEYS INCLUDED)	CERRADURA REF.20.00.02.05 * (INCLUYE LLAVES)	FERMETURE REF.20.00.02.05 (CLES COMPRISES)
24	196923	LOCK KEY RE.10.41.213	LLAVE REF.10.41.213 COMB.T-205	CLE FERMETURE REF.10.41.213

info@zipnasklade.ru
8(800)500-69-51

Nº	REF	DENOMINATION	DENOMINACIÓN	DENOMINATION
25	279901	SEPARATOR WASHER	ARANDELA 13X6.25X 2 NYLON	RONDELLE SEPARATEUR
26	332809	CIRCUIT BRACKET LCBS-4-7-01	SOPORTE CIRCUITO LCBS-4-7-01	SUPPORT CIRCUIT LCBS-4-7-01
27	199893	CLAMP STL-450-3-01	ABRAZADERA STL-450-3-01	BRIDE STL-450-3-01
28	183400	PLATE SCREW ST-4, 20 P.F. C/AL.T25	TORNILLO CHAPA ST-4 (ESPECIAL)*	VIS PLAQUE ST-4, 20 P.F. C/AL.T25
29	146290	BICR.HEX SCREW DIN933-8 M-5X20	TOR.EX.DIN933-8.8 B.TRI.M 5X20	VIS HEX BICR.DIN933-8.8 M-5X20
30	149476	BICR.WASHER B DIN125-ST 4,3	ARAN.B DIN125-ST B.TRI. 4,3	RONDELLE B DIN125-ST BICR.4,3
31	149534	BICR.WASHER B DIN125-ST 5,3	ARAN.B DIN125-ST BICR. 5,3	RONDELLE B BICR.DIN125-ST 5,3
32	150185	BICR.HEX.NUT DIN934-8 M4	TUER.EX.DIN934-8 B.TRI.M 4	ECROU HEX.DIN934-8 BICR.M4
33	176826	SELF-LOCKING NUT DIN985-8 B.TRI.M5	TUER.AUTOBL.DIN985-8 B.TRI.M5	ECROU AUTOBLOCANT DIN 985-8 B.TRI.M5
34	328229	SCREW ALO.T25 AR.18ESTR.M 4X10	TORNILLO ALOM.T25 M 4X10 (ESPECIAL)*	VIS ALOM.T25 AR.18ESTR.M 4X10
35	192864	ALLEN SCREW INOX DIN7991 M4X12	TOR.AV.ALL.INOX DIN7991M 4X 12	VIS ALLEN INOX DIN7991 M4X 12
36	547554	CONTROL PANEL HINGE	BISAGRA PANEL DE MANDOS LAT.I.	CHARNIERE TABLEAU COMMANDE
37	547570	CONTROL PANEL HINGE	BISAGRA PANEL DE MANDOS INF.	CHARNIERE TABLEAU COMMANDE
38	529321	INTELI IMTX PACK	PACK INTELI IMTX	PACK INTELI IMTX

info@zipnasklade.ru
8(800)500-69-51

Nº	REF	DENOMINATION	DENOMINACIÓN	DENOMINATION
		FROM MACHINE Nr: 2.150.743 1.500.252	A PARTIR DE LA MAQUINA No : 2.150.743 1.500.252	A PARTIR DE LA MACHINE NR: 2.150.743 1.500.252
39	632679	SIDE CONTROL PANEL	PANEL DE MANDOS LATERAL	PANNEAU DE COMMANDES LATERAL
40	632612	KEYBOARD IC	TECLADO LAVADORA IC	CLAVIER IC
	632604	KEYBOARD IC (WITH TILTING) (WITH HELP)	TECLADO LAVADORA IC (CON VOLQUETE) (CON HELP)	CLAVIER IC (AVEC SOCLE BASCULANT) (AVEC HELP)
41	587519	SWITCH C1550AL	INTERRUPTOR C1550AL	INTERRUPTEUR C1550AL

info@zipnasklade.ru
8(800)500-69-51

HS-6040 IC (7)
EH090 IC

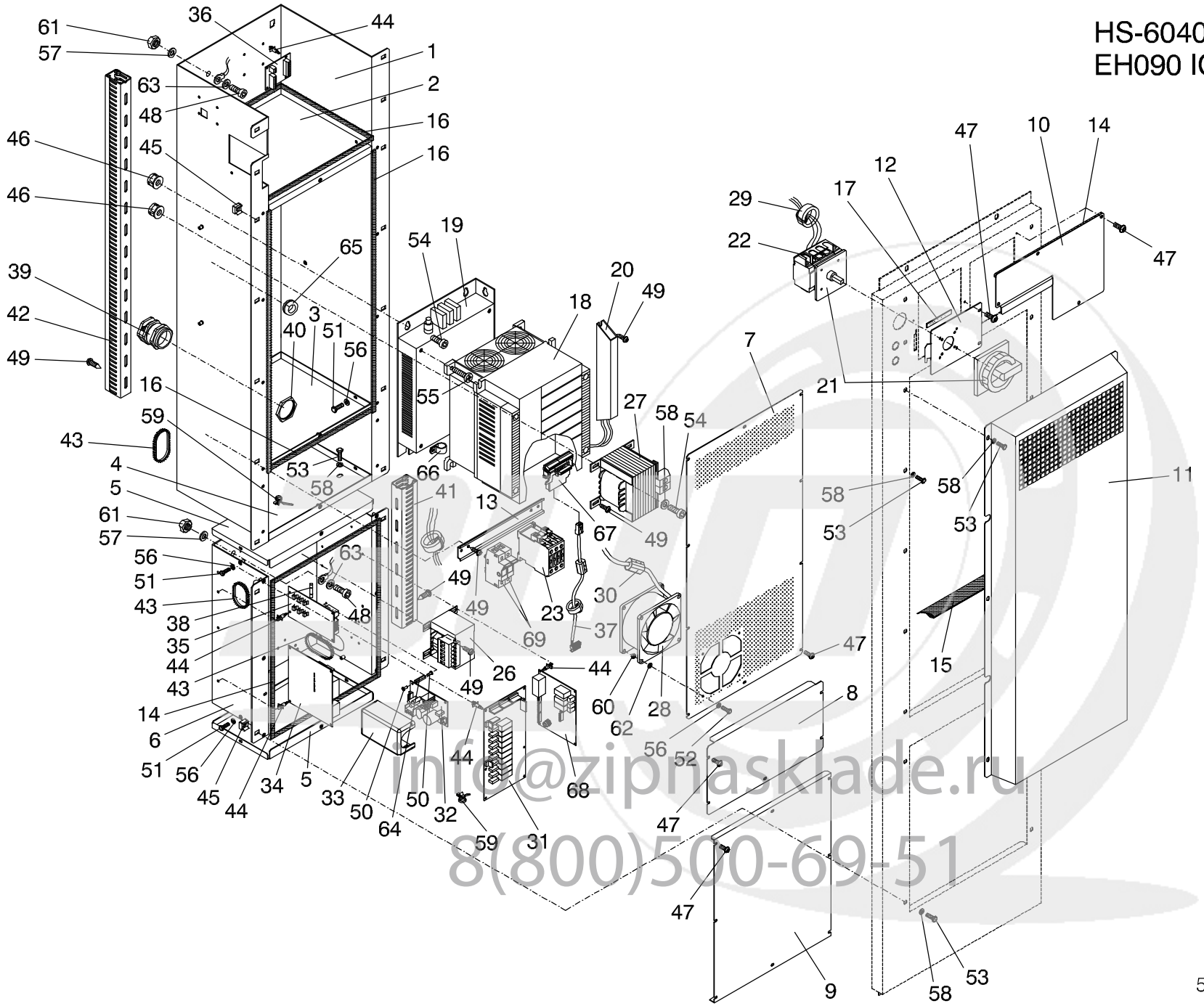

info@zipnasklade.ru
8(800)500-69-51

Nº	REF	DENOMINATION	DENOMINACIÓN	DENOMINATION
1	455006	INVERTER INSTALLATION PLATE	PLACA INSTALACION CONVERTIDOR	PLAQUE INSTALLATION CONVERTISSEUR
2	455014	UPPER CEM COVER	TAPA CEM SUPERIOR	COUVERCLE CEM SUPERIEUR
3	455030	INTERMEDIARY CEM COVER	TAPA CEM INTERMEDIA	COUVERCLE CEM INTERMEDIAIRE
4	455063	LOWER CEM COVER	TAPA CEM INFERIOR	COUVERCLE CEM INFERIEUR
5	454868	ELECTRIC BOX PLATE	FONDO ARMARIO ELECTRICO	FOND ARMOIRE ELECTRIQUE
6	454751	ELECTRIC BOX CASE	CAJA ARMARIO ELECTRICO	BOITE ARMOIRE ELECTRIQUE
7	455113	CEM COVER	TAPA CEM	COUVERCLE CEM
8	455121	ELECTRIC CONTROL COVER	TAPA CUADRO ELECTRICO	COUVERCLE PANNEAU ELECTRIQUE
9	454645	ELECTRIC BOX COVER	TAPA ARMARIO ELECTRICO	COUVERCLE ARMOIRE ELECTRIQUE
10	455154	POWER INLET COVER	TAPA ENTRADA CORRIENTE	COUVERCLE ENTREE COURANT
11	454777	AIR CONDUCTION LID	TAPA CONDUCCION AIRE	COUVERCLE CONDUCTION AIR
12	431114	SELECTOR COVER	TAPA SELECTOR	COUVERCLE SELECTEUR
13	245571	CONTACTOR FIXING PROFILE	PERFIL FIJACION CONTACTORES	PROFILE FIXATION CONTACTEURS
14	110114	PROFILE EXTRA 5463GREY 6X9X4 (1 METER)	BURL.AISLAN.TESA 5463-22 6X9X4 (1 METRO)	PROFILE EXTRA 5463GRIS 6X9X4 (1 METRE)
15	454975	OBTURATOR PROFILE	PERFIL OBTURADOR	PROFILE OBTURATEUR
16	321273	PROFILE E0813T00000 UL94HB (1 METER)	PERFIL E0813R00000 UL94HB (1 METRO)	PROFILE E0813T00000 UL94HB (1 METRE)
17	321265	CONNECTION TERMINAL PLATE	PLACA BORNES CONEXION	PLAQUE BORNE CONNECTION
18	365056	INVERTER FRN 5.5 E1S-2J (FOR 200V-208V-220V-230V-240V) (FOR (208÷240)V)	CONVERTIDOR TIPO FRN 5.5E1S-2E12, 5.5KW (PARA 200V-208V-220V-230V-240V) (PARA (208÷240)V)	CONVERTISSEUR FRN 5.5 E1S-2J (POUR 200V-208V-220V-230V-240V) (POUR (208÷240)V)
	365064	INVERTER FRN 5.5 E1S-4E (FOR 380V-400V-415V-440V-480V) (FOR (440÷480)V)	CONVERTIDOR FRN 5.5 E1S-4E * (PARA 380V-400V-415V-440V-480V) (PARA (440÷480)V)	CONVERTISSEUR FRN 5.5 E1S-4E (POUR 380V-400V-415V-440V-480V) (POUR (440÷480)V)
	604348	FAN FUJI SP_G1S-FAN7.5	VENTILADOR FUJI SP_G1S-FAN7.5	VENTILATEUR FUJI SP_G1S-FAN7.5
19	365072	FILTER TYPE FS21559-24-07-1	FILTRO TIPO FS21559-24-07-1	FILTRE TP.FS21559-24-07-1
20	456681	BRAKING RESISTANCE 100W 40OHM (FOR 200V-208V-220V-230V-240V) (FOR (208÷240)V)	RESISTENCIA FRENO 100W 40OHM (PARA 200V-208V-220V-230V-240V) (PARA (208÷240)V)	RESISTENCE FREIN 100W 40OHM (POUR 200V-208V-220V-230V-240V) (POUR (208÷240)V)
	456699	BRAKING RESISTANCE 100W 160OHM (FOR 380V-400V-415V-440V-480V) (FOR (440÷480)V)	RESISTENCIA FRENO 100W 160OHM (PARA 380V-400V-415V-440V-480V) (PARA (440÷480)V)	RESISTENCE FREIN 100W 160OHM (POUR 380V-400V-415V-440V-480V) (POUR (440÷480)V)

info@zipnasklade.ru
8(800)500-69-51

Nº	REF	DENOMINATION	DENOMINACIÓN	DENOMINATION
21	320887	PAQUET.SWITCH 3LD2 203-0TK53 (FOR MOD. HOT WATER/STEAM)	INTERRUP.PAQUET.3LD2 203-0TK53 (PARA MOD.AGUA CALIENTE/VAPOR)	INTERRUP.PAQUET.3LD2 203-0TK53 (POUR MOD.EAU CHAUDE/VAPEUR)
22	320895	TERMINAL PE 3LD9220-2B	BORNE PE 3LD9220-2B	BORNE PE 3LD9220-2B
23	320846	CONTACTOR 3RT10 24-1AL2	CONTACTOR 3RT10 24-1AL200	CONTACTEUR 3RT10 24-1AL2
	321240	COIL 3RT1924-5AL21 230-50/60	BOBINA 3RT1924-5AL21 230-50/60	BOBINE 3RT1924-5AL21 230-50/60
26	320929	TRANSFORMER IP00 160 VA (FOR 200V-208V-220V-230V-240V) (FOR (208÷240)V)	TRANSFORMADOR IP00 160VA CSA * (PARA 200V-208V-220V-230V-240V) (PARA (208÷240)V)	TRANSFORMATEUR IP00 160 VA (POUR 200V-208V-220V-230V-240V) (POUR (208÷240)V)
	320937	TRANSFORMER IP00 160 VA (FOR 380V-400V-415V-440V-480V) (FOR (440÷480)V)	TRANSFORMADOR IP00 160VA CSA * (PARA 380V-400V-415V-440V-480V) (PARA (440÷480)V)	TRANSFORMATEUR IP00 160 VA (POUR 380V-400V-415V-440V-480V) (POUR (440÷480)V)
27	320978	INDUCTANCE DCR005 (FOR 200V-208V-220V-230V-240V) (FOR (208÷240)V)	INDUCTANCIA DCR005 CSA * (PARA 200V-208V-220V-230V-240V) (PARA (208÷240)V)	INDUCTANCE DCR005 (POUR 200V-208V-220V-230V-240V) (POUR (208÷240)V)
	318808	INDUCTANCE DCR002 (FOR 380V-400V-415V-440V-480V) (FOR (440÷480)V)	INDUCTANCIA DCR002 CSA * (PARA 380V-400V-415V-440V-480V) (PARA (440÷480)V)	INDUCTANCE DCR002 (POUR 380V-400V-415V-440V-480V) (POUR (440÷480)V)
28	147884	FAN 120X120C38 220-240V	VENTILADOR 120X120X38 220-240*	VENTILATEUR 120X120C38 220-240
29	508317	FERRITE 40X24 *	FERRITA 40X24 *	FERRITE 40X24 *
30	321182	FERRITE SPLIT GRFC-13	FERRITA SPLIT GRFC-13	FERRITE SPLIT GRFC-13
31	353326	INTELI LABEL E/S-1/D	PLACA INTELI E/S-1/D	PLAQUE INTELI E/S-1/D
32	332718	POWER SOURCE MW PS-25-12	FUENTE ALIMENT.MW PS-25-12	FONT ALIMENT.MW PS-25-12
33	326843	MICROPROCESSOR PLATE COVER	TAPA PLACA MICROPROCESADOR	COUVERCLE PLAQUE MICROPROSSEUR
34	332544	INTELI BOARD E/S-2/A	PLACA INTELI E/S-2/A	PLAQUE INTELI E/S-2/4
35	332395	AUXILIARY BOARD HS-60**	PLACA AUXILIAR HS-60**	PLAQUE AUXILIAIRE HS-60**
36	365049	INTELI LABEL EXTERNAL DOSING	PLACA INTELI DOS. EXT/A	PLAQUE INTELI DOSAGE EXTERNE
37	446773	ELEC.INST. RS-485	INST. ELEC. RS-485	INST. ELEC. RS-485
38	321125	FUSE SPT 1 A	CART.FUSIB.SPT 0001.2524 1 A*	CARTOUCHE FUS. SPT 1 A
39	326462	STUFFING-BOX EXADIN CLAMP PG29 BRASS	PRENSAESTOPAS EXADIN PG29 LATON	PRESSE-ETOUPES EXADIN BRIDE PG29 LAITON
40	140277	COUNTERNUT PG29 BRASS	TUERCA PG29 LATON	CONTREECROU PG29 LAITON
41	455147	WIRETHROUGH CHANNEL	CANAL PASACABLES	CHANNEL PASSECABLES
42	455238	WIRETHROUGH CHANNEL	CANAL PASACABLES	CHANNEL PASSECABLES
43	332262	CASTING MGS-2-01	MOLDURA MGS-2-01	MOULE MGS-2-01

info@zipnasklade.ru
8(800)500-69-51

Nº	REF	DENOMINATION	DENOMINACIÓN	DENOMINATION
44	332809	CIRCUIT BRACKET LCBS-4-7-01	SOPORTE CIRCUITO LCBS-4-7-01	SUPPORT CIRCUIT LCBS-4-7-01
45	321117	NUT ENJ.M6 1,6-2,5 R.310008-7	TUER.ENJ.M6 1,6-2,5 R.310008-7	ECROU ENJ.M6 1,6-2.5 R310008-7
46	128934	CYLINDRICAL CAGED NUT M-6	TUER.ENJ.M6 CILINDR.R-310078-1	ECROU ENCAGE CYLINDRIQUE M-6
47	328229	SCREW ALO.T25 AR.18ESTR.M 4X10	TORNILLO ALOM.T25 M 4X10 (ESPECIAL)*	VIS ALOM.T25 AR.18ESTR.M 4X10
48	144295	BICR.SCREW ALLEN912-8.8 M 5X25	TOR.ALLDIN912-8.8 B.TRI.M 5X25	VIS ALLDIN912-8.8 BICR.M 5X 25
49	183400	PLATE SCREW ST-4, 20 P.F. C/AL.T25	TORNILLO CHAPA ST-4 (ESPECIAL)*	VIS PLAQUE ST-4, 20 P.F. C/AL.T25
50	322693	SCREW PT KN35X10 WN1412	TORNILLO PT KN35X10 WN1412 (ESPECIAL)	VIS PT KN35X10 WN1412
51	146258	BIC.HEX SCREW DIN933-4.8 M4X10	TOR.EX.DIN933-4.8 B.TRI.M 4X10	VIS HEX DIN933-4.8 BICR.M 4X10
52	146266	BICR.HEX SCREW DIN933-8 M-4X15	TOR.EX.DIN933-4.8 B.TRI.M 4X15	VIS HEX BICR.DIN933-8.8 M-4X15
53	146233	BICR.HEX SCREW DIN933-8 M6X15	TOR.EX.DIN933-8.8 B.TRI.M 6X15	VIS HEX DIN933-8.8 BICR.M6X15
54	144337	ALLEN SCREW DIN912 M 6X15	TOR.ALLDIN912-8.8 B.TRI.M 6X15	VIS ALLEN DIN912 M 6X15
55	144394	ALLEN SCREW DIN912 M8X20	TOR.ALLDIN912-8.8 B.TRI.M 8X20	VIS ALLEN DIN912 M8X20
56	149476	BICR.WASHER B DIN125-ST 4,3	ARAN.B DIN125-ST B.TRI. 4,3	RONDELLE B DIN125-ST BICR.4,3
57	149534	BICR.WASHER B DIN125-ST 5,3	ARAN.B DIN125-ST BICR. 5,3	RONDELLE B BICR.DIN125-ST 5,3
58	153205	WASHER 20X7X2	ARANDELA 20X7X2 TRIVALEN.	RONDELLE 20X7X2
59	326132	CABLE TIE Ø35 NATURAL	ABRAZADERA Ø35 NATURAL	BRIDE Ø35 NATUREL
60	132043	SELF-LOCKING NUT DIN985-8 B.TRI.M 4	TUER.AUTOBL.DIN985-8 B.TRI.M 4	ECROU AUTOBLOCANT DIN985-8 B.TRI.M 4
61	150177	BICR HEX NUT DIN934-8 M5	TUER.EX.DIN934-8 B.TRI.M 5	ECROU HEX DIN934-8 BIC.M5
62	279901	SEPARATOR WASHER	ARANDELA 13X6.25X 2 NYLON	RONDELLE SEPARATEUR
63	149724	BICR EXT.TOOT.WASH.DIN6798 M5	ARAN.DEN.EXT.B.TRI.DIN6798M 5	RONDEL DEN.EX.BICR.DIN6798 M5
64	322685	SEPARATOR HEX.HS6-8	SEPARADOR EXAGONAL HS6-8	SEPARATEUR HEX. HS6-8
65	332601	SHEATH-LODGING DGB-7	PASAMUROS DGB-7	LOGEMENT DGB-7
66	323055	ALUMINIUM CLAMP AL2	ABRAZADERA ALUMINIO AL2	BRIDE ALUMINIUM AL2
67	503557	COMMUNICATION BOARD RS485	PLACA COMUNIC.RS485 OPC-E1-RS	PLAQUE COMMUNICATIONS RS485
68	456509	INTELI BOARD E/S-3/A (TILT) (WITH TILTING) (WITH HELP)	PLACA INTELI E/S-3/A (TILT) (CON VOLQUETE) (CON HELP)	PLAQUE INTELI E/S-3/A (TILT) (AVEC SOCLE BASCULANT) (AVEC HELP)

info@zipnasklade.ru
8(800)500-69-51

Nº	REF	DENOMINATION	DENOMINACIÓN	DENOMINATION
		FROM MACHINE Nr: 2.150.392 1.500.101	A PARTIR DE LA MAQUINA No : 2.150.392 1.500.101	A PARTIR DE LA MACHINE NR: 2.150.392 1.500.101
24	508333	FUSE 10X38 UL-ATQ 1,25A * (CANCELLED)	FUSIBLE 10X38 UL-ATQ 1,25A * (ANULADO)	FUSIBLE 10X38 UL-ATQ 1,25A * (ANNULE)
	508325	FUSE 10X38 UL-ATQ 1A * (CANCELLED)	FUSIBLE 10X38 UL-ATQ 1A * (ANULADO)	FUSIBLE 10X38 UL-ATQ 1A * (ANNULE)
25	306431	FUSE HOLDER 32A 10X38 (CANCELLED)	PORTAFUSIBLES 32A 10X38 1P* (ANULADO)	PORTE-FUSIBLE 32A 10X38 (ANNULE)
69	518175	AUTOMATIC SWITCH 5SY4 115-8 (FOR 200V-208V-220V-230V-240V) (FOR (208÷240)V)	INTERRUPTOR AUT.5SY4 115-8 (PARA 200V-208V-220V-230V-240V) (PARA (208÷240)V)	INTERRUPTEUR AUT.5SY4 115-8 (POUR 200V-208V-220V-230V-240V) (POUR (208÷240)V)
	518167	AUTOMATIC SWITCH 1A (FOR 380V-400V-415V-440V-480V) (FOR (440÷480)V)	INTERRUPTOR AUT. 1A CURVA D* (PARA 380V-400V-415V-440V-480V) (PARA (440÷480)V)	INTERRUPTEUR AUT.1A (POUR 380V-400V-415V-440V-480V) (POUR (440÷480)V)

info@zipnasklade.ru
8(800)500-69-51

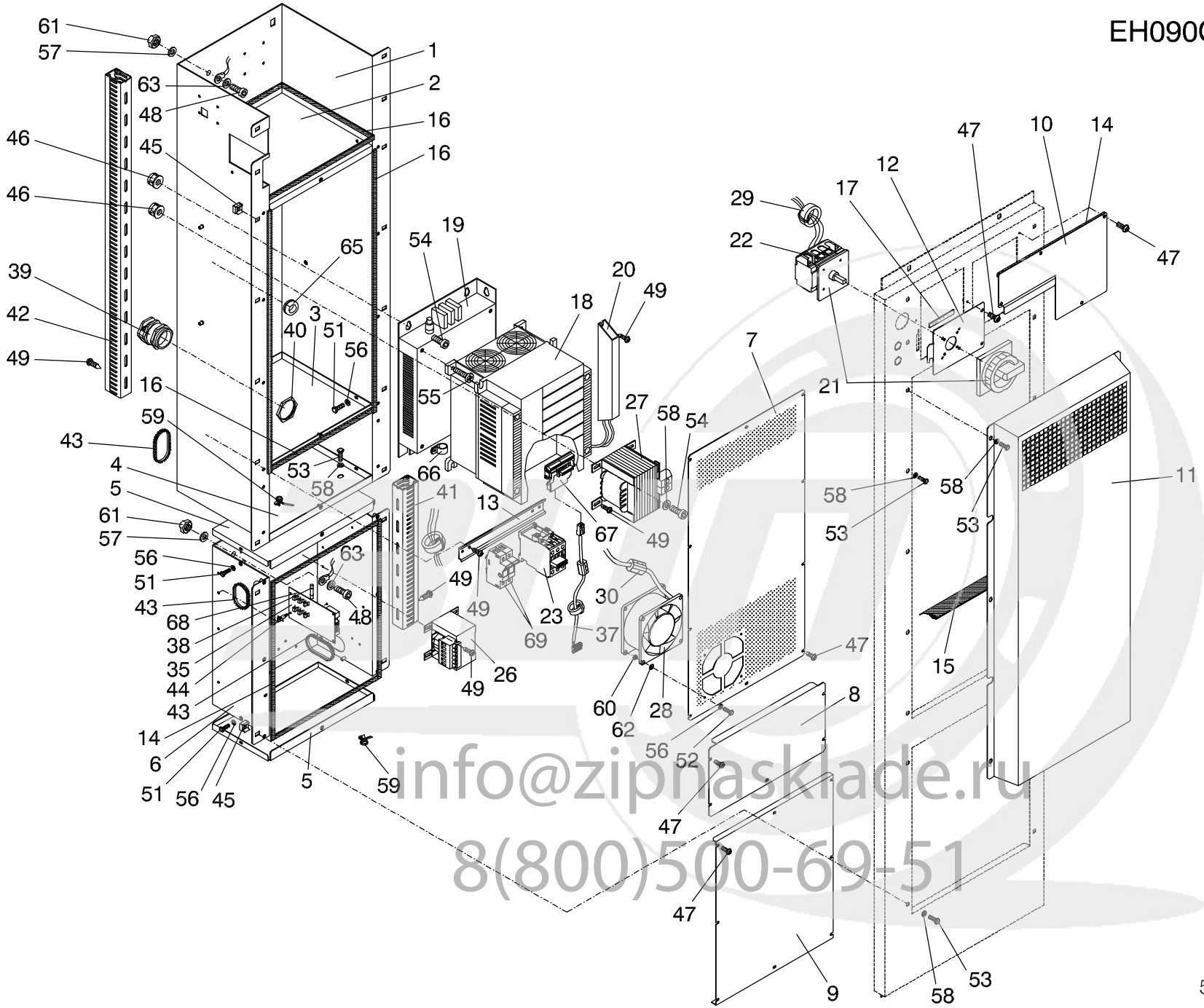

info@zipnasklade.ru
8(800)500-69-51

Nº	REF	DENOMINATION	DENOMINACIÓN	DENOMINATION
		(COIN CTRL MODELS ONLY)	(PARA MODELOS A COIN CONTROL)	(POUR MODELE COIN CONTROL)
1	455006	INVERTER INSTALLATION PLATE	PLACA INSTALACION CONVERTIDOR	PLAQUE INSTALLATION CONVERTISSEUR
2	455014	UPPER CEM COVER	TAPA CEM SUPERIOR	COUVERCLE CEM SUPERIEUR
3	455030	INTERMEDIARY CEM COVER	TAPA CEM INTERMEDIA	COUVERCLE CEM INTERMEDIAIRE
4	455063	LOWER CEM COVER	TAPA CEM INFERIOR	COUVERCLE CEM INFERIEUR
5	454868	ELECTRIC BOX PLATE	FONDO ARMARIO ELECTRICO	FOND ARMOIRE ELECTRIQUE
6	454751	ELECTRIC BOX CASE	CAJA ARMARIO ELECTRICO	BOITE ARMOIRE ELECTRIQUE
7	455113	CEM COVER	TAPA CEM	COUVERCLE CEM
8	455121	ELECTRIC CONTROL COVER	TAPA CUADRO ELECTRICO	COUVERCLE PANNEAU ELECTRIQUE
9	454645	ELECTRIC BOX COVER	TAPA ARMARIO ELECTRICO	COUVERCLE ARMOIRE ELECTRIQUE
10	455154	POWER INLET COVER	TAPA ENTRADA CORRIENTE	COUVERCLE ENTREE COURANT
11	454777	AIR CONDUCTION LID	TAPA CONDUCCION AIRE	COUVERCLE CONDUCTION AIR
12	431114	SELECTOR COVER	TAPA SELECTOR	COUVERCLE SELECTEUR
13	245571	CONTACTOR FIXING PROFILE	PERFIL FIJACION CONTACTORES	PROFILE FIXATION CONTACTEURS
14	110114	PROFILE EXTRA 5463GREY 6X9X4 (1 METER)	BURL.AISLAN.TESA 5463-22 6X9X4 (1 METRO)	PROFILE EXTRA 5463GRIS 6X9X4 (1 METRE)
15	454975	OBTURATOR PROFILE	PERFIL OBTURADOR	PROFILE OBTURATEUR
16	321273	PROFILE E0813T00000 UL94HB (1 METER)	PERFIL E0813R00000 UL94HB (1 METRO)	PROFILE E0813T00000 UL94HB (1 METRE)
17	321265	CONNECTION TERMINAL PLATE	PLACA BORNES CONEXION	PLAQUE BORNE CONNECTION
18	365056	INVERTER FRN 5.5 E1S-2J (FOR 200V-208V-220V-230V-240V) (FOR (208÷240)V)	CONVERTIDOR TIPO FRN 5.5E1S-2E12, 5.5KW (PARA 200V-208V-220V-230V-240V) (PARA (208÷240)V)	CONVERTISSEUR FRN 5.5 E1S-2J (POUR 200V-208V-220V-230V-240V) (POUR (208÷240)V)
	365064	INVERTER FRN 5.5 E1S-4E (FOR 380V-400V-415V-440V-480V) (FOR (440÷480)V)	CONVERTIDOR FRN 5.5 E1S-4E * (PARA 380V-400V-415V-440V-480V) (PARA (440÷480)V)	CONVERTISSEUR FRN 5.5 E1S-4E (POUR 380V-400V-415V-440V-480V) (POUR (440÷480)V)
	604348	FAN FUJI SP_G1S-FAN7.5	VENTILADOR FUJI SP_G1S-FAN7.5	VENTILATEUR FUJI SP_G1S-FAN7.5
19	365072	FILTER TYPE FS21559-24-07-1	FILTRO TIPO FS21559-24-07-1	FILTRE TP.FS21559-24-07-1

info@zipnasklade.ru
8(800)500-69-51

Nº	REF	DENOMINATION	DENOMINACIÓN	DENOMINATION
20	456681	BRAKING RESISTANCE 100W 40OHM (FOR 200V-208V-220V-230V-240V) (FOR (440÷480)V)	RESISTENCIA FRENO 100W 40OHM (PARA 200V-208V-220V-230V-240V) (PARA (440÷480)V)	RESISTENCE FREIN 100W 40OHM (POUR 200V-208V-220V-230V-240V) (POUR (440÷480)V)
	456699	BRAKING RESISTANCE 100W 160OHM (FOR 380V-400V-415V-440V-480V) (FOR (440÷480)V)	RESISTENCIA FRENO 100W 160OHM (PARA 380V-400V-415V-440V-480V) (PARA (440÷480)V)	RESISTENCE FREIN 100W 160OHM (POUR 380V-400V-415V-440V-480V) (POUR (440÷480)V)
21	320887	PAQUET.SWITCH 3LD2 203-0TK53 (FOR MOD. HOT WATER/STEAM)	INTERRUP.PAQUET.3LD2 203-0TK53 (PARA MOD.AGUA CALIENTE/VAPOR)	INTERRUP.PAQUET.3LD2 203-0TK53 (POUR MOD.EAU CHAUDE/VAPEUR)
22	320895	TERMINAL PE 3LD9220-2B	BORNE PE 3LD9220-2B	BORNE PE 3LD9220-2B
23	357921	RELAY OMRON G7Z-3A1B-20Z 12VDC	RELE OMRON G7Z-3A1B-20Z 12VDC	RELAIS OMRON G7Z-3A1B-20Z 12VDC
26	320929	TRANSFORMER IP00 160 VA (FOR 200V-208V-220V-230V-240V) (FOR (208÷240)V)	TRANSFORMADOR IP00 160VA CSA * (PARA 200V-208V-220V-230V-240V) (PARA (208÷240)V)	TRANSFORMATEUR IP00 160 VA (POUR 200V-208V-220V-230V-240V) (POUR (208÷240)V)
	320937	TRANSFORMER IP00 160 VA (FOR 380V-400V-415V-440V-480V) (FOR (440÷480)V)	TRANSFORMADOR IP00 160VA CSA * (PARA 380V-400V-415V-440V-480V) (PARA (440÷480)V)	TRANSFORMATEUR IP00 160 VA (POUR 380V-400V-415V-440V-480V) (POUR (440÷480)V)
27	320978	INDUCTANCE DCR005 (FOR 200V-208V-220V-230V-240V) (FOR (208÷240)V)	INDUCTANCIA DCR005 CSA * (PARA 200V-208V-220V-230V-240V) (PARA (208÷240)V)	INDUCTANCE DCR005 (POUR 200V-208V-220V-230V-240V) (POUR (208÷240)V)
	318808	INDUCTANCE DCR002 (FOR 380V-400V-415V-440V-480V) (FOR (440÷480)V)	INDUCTANCIA DCR002 CSA * (PARA 380V-400V-415V-440V-480V) (PARA (440÷480)V)	INDUCTANCE DCR002 (POUR 380V-400V-415V-440V-480V) (POUR (440÷480)V)
28	147884	FAN 120X120C38 220-240V	VENTILADOR 120X120X38 220-240*	VENTILATEUR 120X120C38 220-240
29	508317	FERRITE 40X24 *	FERRITA 40X24 *	FERRITE 40X24 *
30	321182	FERRITE SPLIT GRFC-13	FERRITA SPLIT GRFC-13	FERRITE SPLIT GRFC-13
35	332395	AUXILIARY BOARD HS-60**	PLACA AUXILIAR HS-60**	PLAQUE AUXILIAIRE HS-60**
37	530402	INST. ELEC. NIVEL Y RS-485	INST. ELEC. NIVEL Y RS-485	INST. ELEC. NIVEL Y RS-485
38	321125	FUSE SPT 1 A	CART.FUSIB.SPT 0001.2524 1 A*	CARTOUCHE FUS. SPT 1 A
39	326462	STUFFING-BOX EXADIN CLAMP PG29 BRASS	PRENSAESTOPAS EXADIN PG29 LATON	PRESSE-ETOUPES EXADIN BRIDE PG29 LAITON
40	140277	COUNTERNUT PG29 BRASS	TUERCA PG29 LATON	CONTREECROU PG29 LAITON
41	455147	WIRETHROUGH CHANNEL	CANAL PASACABLES	CHANNEL PASSECABLES
42	455238	WIRETHROUGH CHANNEL	CANAL PASACABLES	CHANNEL PASSECABLES
43	332262	CASTING MGS-2-01	MOLDURA MGS-2-01	MOULE MGS-2-01
44	332809	CIRCUIT BRACKET LCBS-4-7-01	SOPORTE CIRCUITO LCBS-4-7-01	SUPPORT CIRCUIT LCBS-4-7-01
45	321117	NUT ENJ.M6 1,6-2,5 R.310008-7	TUER.ENJ.M6 1,6-2,5 R.310008-7	ECROU ENJ.M6 1,6-2.5 R310008-7

info@zipnasklade.ru
8(800)500-69-51

Nº	REF	DENOMINATION	DENOMINACIÓN	DENOMINATION
46	128934	CYLINDRICAL CAGED NUT M-6	TUER.ENJ.M6 CILINDR.R-310078-1	ECROU ENCAGE CYLINDRIQUE M-6
47	328229	SCREW ALO.T25 AR.18ESTR.M 4X10	TORNILLO ALOM.T25 M 4X10 (ESPECIAL)*	VIS ALOM.T25 AR.18ESTR.M 4X10
48	144295	BICR.SCREW ALLEN912-8.8 M 5X25	TOR.ALLDIN912-8.8 B.TRI.M 5X25	VIS ALLDIN912-8.8 BICR.M 5X 25
49	183400	PLATE SCREW ST-4, 20 P.F. C/AL.T25	TORNILLO CHAPA ST-4 (ESPECIAL)*	VIS PLAQUE ST-4, 20 P.F. C/AL.T25
51	146258	BIC.HEX SCREW DIN933-4.8 M4X10	TOR.EX.DIN933-4.8 B.TRI.M 4X10	VIS HEX DIN933-4.8 BICR.M 4X10
52	146266	BICR.HEX SCREW DIN933-8 M-4X15	TOR.EX.DIN933-4.8 B.TRI.M 4X15	VIS HEX BICR.DIN933-8.8 M-4X15
53	146233	BICR.HEX SCREW DIN933-8 M6X15	TOR.EX.DIN933-8.8 B.TRI.M 6X15	VIS HEX DIN933-8.8 BICR.M6X15
54	144337	ALLEN SCREW DIN912 M 6X15	TOR.ALLDIN912-8.8 B.TRI.M 6X15	VIS ALLEN DIN912 M 6X15
55	144394	ALLEN SCREW DIN912 M8X20	TOR.ALLDIN912-8.8 B.TRI.M 8X20	VIS ALLEN DIN912 M8X20
56	149476	BICR.WASHER B DIN125-ST 4,3	ARAN.B DIN125-ST B.TRI. 4,3	RONDELLE B DIN125-ST BICR.4,3
57	149534	BICR.WASHER B DIN125-ST 5,3	ARAN.B DIN125-ST BICR. 5,3	RONDELLE B BICR.DIN125-ST 5,3
58	153205	WASHER 20X7X2	ARANDELA 20X7X2 TRIVALEN.	RONDELLE 20X7X2
59	326132	CABLE TIE Ø35 NATURAL	ABRAZADERA Ø35 NATURAL	BRIDE Ø35 NATUREL
60	132043	SELF-LOCKING NUT DIN985-8 B.TRI.M 4	TUER.AUTOBL.DIN985-8 B.TRI.M 4	ECROU AUTOBLOCANT DIN985-8 B.TRI.M 4
61	150177	BICR HEX NUT DIN934-8 M5	TUER.EX.DIN934-8 B.TRI.M 5	ECROU HEX DIN934-8 BIC.M5
62	279901	SEPARATOR WASHER	ARANDELA 13X6.25X 2 NYLON	RONDELLE SEPARATEUR
63	149724	BICR EXT.TOOT.WASH.DIN6798 M5	ARAN.DEN.EXT.B.TRI.DIN6798M 5	RONDEL DEN.EX.BICR.DIN6798 M5
65	332601	SHEATH-LODGING DGB-7	PASAMUROS DGB-7	LOGEMENT DGB-7
66	323055	ALUMINIUM CLAMP AL2	ABRAZADERA ALUMINIO AL2	BRIDE ALUMINIUM AL2
67	503557	COMMUNICATION BOARD RS485	PLACA COMUNIC.RS485 OPC-E1-RS	PLAQUE COMMUNICATIONS RS485
68	530477	ELECTROVALVE ELEC.INST.	INST. ELEC. ELECTROVALVULAS	INST. ELEC. ELECTROVANNES
69	518175	AUTOMATIC SWITCH 5SY4 115-8 (FOR 200V-208V-220V-230V-240V) (FOR (208÷240)V)	INTERRUPTOR AUT.5SY4 115-8 (PARA 200V-208V-220V-230V-240V) (PARA (208÷240)V)	INTERRUPTEUR AUT.5SY4 115-8 (POUR 200V-208V-220V-230V-240V) (POUR (208÷240)V)
	518167	AUTOMATIC SWITCH 1A (FOR 380V-400V-415V-440V-480V) (FOR (440÷480)V)	INTERRUPTOR AUT. 1A CURVA D* (PARA 380V-400V-415V-440V-480V) (PARA (440÷480)V)	INTERRUPTEUR AUT.1A (POUR 380V-400V-415V-440V-480V) (POUR (440÷480)V)

info@zipnasklade.ru
8(800)500-69-51

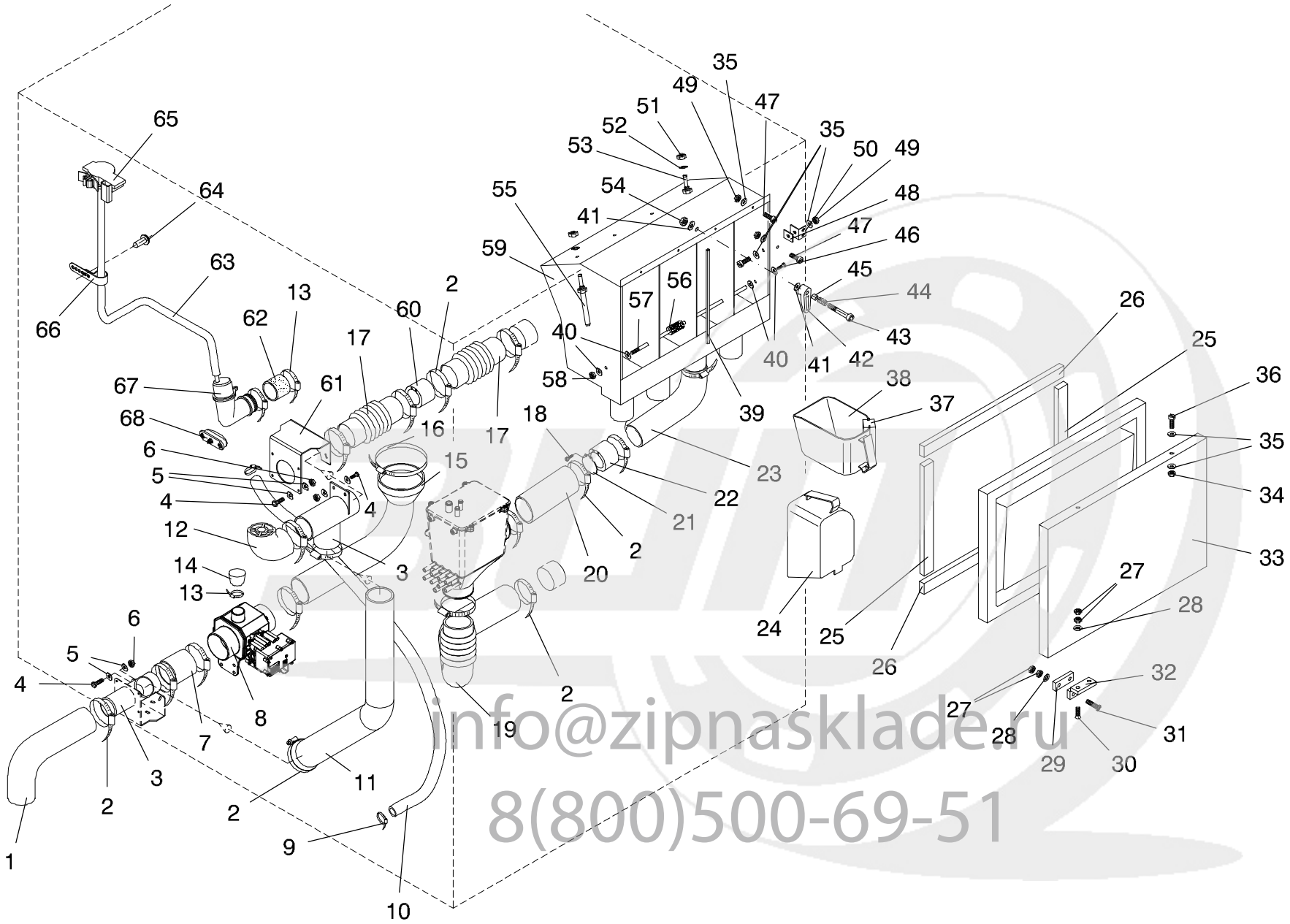

info@zipnasklade.ru
8(800)500-69-51

Nº	REF	DENOMINATION	DENOMINACIÓN	DENOMINATION
1	163253	DRAIN OUTLET HOSE	TUBO SALIDA DESAGÜE	TUBE SORTIE VIDANGE
2	132340	CLAMP REF.30173380-2 D80-100	ABRAZADERA REF.30173380-2 D80-100	BRIDE REF.30173380-2 D80-100
3	178152	UNION T	TE UNION	T UNION
4	146316	BICR.HEX SCREW DIN933-8 M-6X20	TOR.EX.DIN933-8.8 B.TRI.M 6X20	VIX HEX BICR.DIN933-8.8 M-6X20
5	115733	WASHER 16X7X3	ARANDELA 16X7X3 TRIVALEN.	RONDELLE 16X7X3
6	150227	BICR HEX NUT DIN934-8 M6	TUER.EX.DIN934-8 B.TRI.M 6	ECROU HEX DIN934-8 BICR.M6
7	277053	DRAIN JOINTING HOSE	TUBO UNION DESAGUE	TUBE UNION VIDANGE
8	600577	DRAIN G3-C-180	DESAGÜE G3-C-180	VIDANGE G3-C-180
	600551	DRAIN G3-O-180	DESAGÜE G3-O-180	VIDANGE G3-O-180
9	156109	CLAMP 16-27	ABRAZADERA 16- 27 *	BRIDE 16-27
10	294793	BEARING BOX DRAIN HOSE	TUBO DESAGÜE CAJA COJINETES	TUBE VIDANGE BOITE ROULEMENTS
11	357129	RUBBER ELBOW D73X465X385	CODO GOMA D73X465X385	COUDE GOMME D73X465X385
12	300442	EXHAUST ELBOW	CODO SALIDA VAHOS	COUDE SORTIE VAPEURS
13	149609	CLAMP 25-40	ABRAZADERA 25- 40 *	BRIDE 25-40
14	135004	CONICAL END-PIECE REPRIMSA R16	TOPE CONICO REPRIMSA R-16 D30	ARRET CONIQUE REPRIMSA R16 D30
15	353383	DRAIN HOSE	TUBO DESAGÜE	TUBE VIDANGE
16	358192	CLAMP 130-150 *	ABRAZADERA 130-150 *	BRIDE 130-150 *
17	357152	VAPOUR OUTLET JOINTING	UNION SALIDA VAHOS	UNION SORTIE VAPEURS
18	192203	INOX PLATE SCREW DIN7971 4X1/2	TOR.CHAPA INOX.DIN7971 4X1/2"	VIS PLAQUE INOX DIN7971 4X1/2"
19	357095	DRAIN HOSE	TUBO DESAGÜE	TUBE VIDANGE
20	349613	DRAIN HOSE	TUBO DESAGÜE	TUBE VIDANGE
21	263954	STOPPER MEMBRANE	MEMBRANA OBTURADOR	OBTURATEUR MEMBRANE
22	263962	STOPPER (MEMBRANE INCLUDED)	OBTURADOR (INCLUYE MEMBRANA)	OBTURATEUR (COMPRIS MEMBRANE)
23	357111	DRAIN HOSE	TUBO DESAGÜE	TUBE VIDANGE
24	244806	SOLID SOAP DISPENSER	DOSIFICADOR DETERGENTE SOLIDO	BAC A PRODUIT DETERGENT SOLIDE
25	357855	SOAP DISPENSER COVER GASKET	JUNTA TAPA DOSIFICADORES	JOINT COUVERCLE BAC A PRODUITS
26	357848	SOAP DISPENSER COVER GASKET	JUNTA TAPA DOSIFICADORES	JOINT COUVERCLE BAC A PRODUITS
27	149906	INOX. HEX. NUT DIN 934 M-3	TUER.EX.DIN934 INOX A2-70 M 3	ECROU HEX. INOX DIN934 M-3

info@zipnasklade.ru
8(800)500-69-51

Nº	REF	DENOMINATION	DENOMINACIÓN	DENOMINATION
28	152132	INOX A2 WASHER DIN 125	ARAN. DIN125 INOX A2 3,2	RONDELLE INOX A2 DIN 125 3,2
29	244590	HINGE SUPPLEMENT	SUPLEMENTO BISAGRA	SUPPLEMENT CHARNIERE
30	176784	INOX SCREW DIN 963 M-3X10 A270	TOR.AV.DIN963 INOX A2-70 M3X10	VIS INOX DIN 963 M-3X10 A2-70
31	144758	INOX LENS HEAD S.DIN963 M 3X16	TOR.AV.DIN963 INOX A2-70 M3X16	VIS T/FRAI.INOX DIN963 M 3X16
32	176800	HINGE 72-7-3329 CHROMED	BISAGRA PINET 72-7-3329 CROM.	CHARNIERE 72-7-3329 CHROM
33	244566	DISPENSERS LID (INOX)	TAPA DOSIFICADORES (INOX)	COUVERCLE BAC A PRODUITS (INOX)
	446880	SOAP DISPENSER LID (PRE-COATED)	TAPA DOSIFICADORES (PRE-COATED)	COUVERCLE BAC A PRODUITS (PRE-COATED)
34	149922	INOX HEX. NUT DIN 934 M-4	TUER.EX.DIN934 INOX A2-70 M 4	ECROU HEX. INOX DIN 934 M-4
35	149328	INOX A2 WASHER DIN 125 4,3	ARAN. DIN125 INOX A2 4,3	RONDELLE INOX A2 DIN 125 4,3
36	145649	INOX FLAT SCREW DIN85 M 4X10	TOR.PLA.DIN85 INOX A2-70 M4X10	VIS PLAT INOX DIN85 M-4X10 A2
37	234930	CHLORINE INTAKE HOSE	TUBO ASPIRACION CLORO	TUBE ASPIRATION CHLORE
38	244855	LIQUID SOAP DISPENSER (HOSE INCLUDED)	DOSIFICADOR DETERGENTE LIQUIDO (INCLUYE TUBO)	BAC A PRODUIT DETERG.LIQUIDE (TUBE COMPRIS)
39	255547	SOAP DISPENSER PROFILE	PERFIL DOSIFICADOR	PROFILE BACS A PRODUITS
40	160838	WASHER 14X6X1,5	ARANDELA 14X6X1.5 INOX	RONDELLE 14X6X1,5
41	149351	INOX A2 WASHER DIN 125 8,4	ARAN. DIN125 INOX A2 8,4	RONDELLE INOX A2 DIN 125 8,4
42	187393	LOCKING HANDLE	MANECILLA CIERRE	POIGNEE FERMETURE
43	144436	ALLEN SCREW DIN912 M8X45	TOR.ALL DIN912-8.8 B.TRI.M8X45	VIS ALLEN DIN912 M8X45
44	187401	LOCKING HANDLE SPRING	MUELLE MANECILLA CIERRE	RESSORT POIGNEE FERMETURE
45	257469	HANDLE HOSE	TUBO MANECILLA	TUBE POIGNEE
46	144782	INOX HEX SCREW DIN933 M 5X15	TOR.EX.DIN933INOX A2-70 M 5X15	VIS HEX INOX DIN933 M 5X15
47	145631	INOX FLAT SCREW DIN85 A2-70 M4X16	TOR.PLA.DIN85 INOX A2-70 M4X16	VIS PLAT INOX DIN85 A2-70 M4X16
48	256446	SOAP DISPENSER BRACKET PIECE	PIEZA SOPORTE DOSIFICADOR	PIECE SUPPORT BAC A PRODUITS
49	176792	SELF-LOCKING NUT DIN985 INOX M 4	TUER.AUTOBL.DIN985 INOX M 4*	ECROU AUTOBLOCANT DIN985 INOX M 4
50	256370	SOAP DISPENSER FIXING	FIJACION DOSIFICADOR	FIXATION BAC A PRODUITS
51	150250	BICR HEX.NUT DIN 934-8 M 14	TUER.EX.DIN934-8 B.TRI.M14	ECROU HEX.BICR DIN 934-8 M 14
52	149393	BICR WASHER B DIN125-ST 15	ARAN.B DIN125-ST B.TRI.15	RONDELLE B BICR DIN125-ST 15
53	242883	DISPENSER HOSE COUPLING	RACOR TUBO DOSIFICADOR	RACCORD TUBE BAC A PRODUITS

info@zipnasklade.ru
8(800)500-69-51

Nº	REF	DENOMINATION	DENOMINACIÓN	DENOMINATION
54	164285	SELF-LOCKING NUT DIN985-8 B.TRI.M8	TUER.AUTOBL.DIN985-8 B.TRI.M8	ECROU AUTOBLOCANT DIN985-8 B.TRI.M8
55	244467	DISPENSER HOSE	TUBO DOSIFICADOR	TUBE BAC A PRODUITS
56	271916	SOAP DISPENSER ROD PROTECTION	FUNDA VARILLA DOSIFICADOR	FOURREAU BAGUET.BAC A PRODUITS
57	256545	SOAP DISPENSER BAR	VARILLA DOSIFICADOR	BAGUETTE BAC A PRODUITS
58	176826	SELF-LOCKING NUT DIN985-8 B.TRI.M5	TUER.AUTOBL.DIN985-8 B.TRI.M5	ECROU AUTOBLOCANT DIN 985-8 B.TRI.M5
59	256404	DISPENSER BOX SET (PIN AND PROFILES INCLUDES)	CONJUNTO DOSIFICADORES (INCLUYE VARILLA Y PERFILES)	ENSEMBLE BOITE BAC A PRODUITS BAGUETTEE ET PROFILES COMPRIS
60	194217	OBTURATOR HOSE	TUBO OBTURADOR	TUBE OBTURATEUR
61	451609	DRAIN BRACKET	SOPORTE DESAGÜE	SUPPORT VIDANGE
62	321000	PRESSOSTAT BODY JOINTING	UNION CUERPO PRESOSTATO	UNION CORPS PRESSOSTAT
63	503532	PRESSURE TRANSMITTER HOSE	TUBO TRANSMISOR PRESION	TUYAU PRESSOSTAT
64	183400	PLATE SCREW ST-4, 20 P.F. C/AL.T25	TORNILLO CHAPA ST-4 (ESPECIAL)*	VIS PLAQUE ST-4, 20 P.F. C/AL.T25
65	322784	PRESSURE TRANSMITTER 400.95100	TRANSM.PRESION HUBA 400.95100	PRESSOSTAT HUBA 400.95100
66	140418	CLAMP UNEX REF 1201	BRIDA UNEX 1201	BRIDE UNEX REF 1201
67	320382	PRESSURE TRANSMITT INTAKE BODY	CUERPO TOMA PRESOSTATO	CORPS PRISE PRESSOSTAT
68	121962	HEATER INLET LID	CIERRE ENTRADA CALEFACTOR *	FERMETURE ENTREE RESISTANCE

info@zipnasklade.ru
8(800)500-69-51

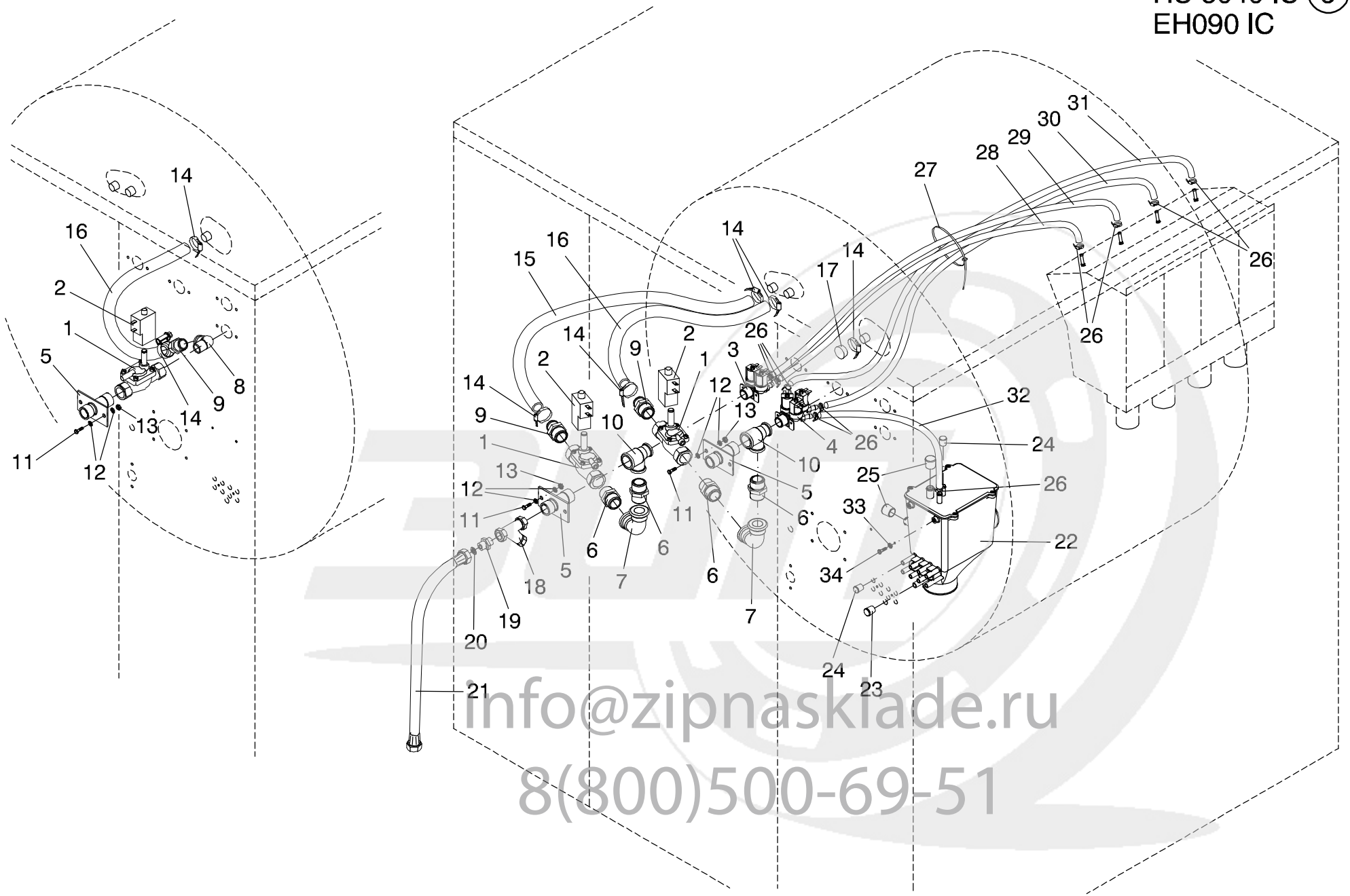

info@zipnaskiade.ru
8(800)500-69-51

Nº	REF	DENOMINATION	DENOMINACIÓN	DENOMINATION
1	352989	VALV EV220A 22B G 1E NC000	VALV EV220A 22B G 1E NC000	VALV EV220A 22B G 1E NC000
	503417	SPARE PARTS KIT EV220A 042U1006	KIT REPUES. EV220A 042U1006	KIT RECHANGES EV220A 042U1006
2	333716	COIL AB 5W 12V CC 042N0806	BOBINA AB 5W 12V CC 042N0806	BOBINE AB 5W 12V CC 042N0806
3	427112	DOUBLE ELECTROV. 349 180º 12VCC*	ELECTROV.DOBLE 349 180º 12VCC*	ELECTROV.DOUBLE 349 180º 12VCC*
	332296	COIL 255043000000 12VCC	BOBINA 255043000000 12VCC	BOBINE 255043000000 12VCC
	300202	INTEGRAL GUIDE-MEMBRANE 30696	MEMBRANA-GUIA INTEGRAL 30696 *	MEMBRANE-GUIDE INTEGRALE 30696
	300194	YELLOW CASE 30053	ESTUCHE AMARILLO 30053	BOITE JAUNE 30053
4	447045	THREE TRACK ELECTROVALVE	ELECTROVALVULA TRES VIAS	ELECTROVANNE TROIS VOIES
	332296	COIL 255043000000 12VCC	BOBINA 255043000000 12VCC	BOBINE 255043000000 12VCC
	300202	INTEGRAL GUIDE-MEMBRANE 30696	MEMBRANA-GUIA INTEGRAL 30696 *	MEMBRANE-GUIDE INTEGRALE 30696
	300194	YELLOW CASE 30053	ESTUCHE AMARILLO 30053	BOITE JAUNE 30053
	156257	REGULATOR 8 L/MIN (RED)	REGULADOR DE 8 L/MIN. (ROJO)	REGULATEUR 8 L/MIN (ROUGE)
5	214502	ELECTROVALVE BRACKET	SOPORTE ELECTROVALVULA	SUPPORT ELECTROVANNE
6	129791	FIG 280 1" GALV	FIGURA 280 DE 1" GALV.	FIG 280 1" GALV
7	129361	FIG 2 1" GALV	FIGURA 2 DE 1" GALV.	FIG 2 1" GALV
8	129510	FIG.92 1" GALV.	FIGURA 92 DE 1" GALV.	FIG.92 1" GALV.
9	166793	WATER INLET NUT	TUERCA ENTRADA AGUA	ECROU ENTREE EAU
10	128769	T FIG 130 1"-1"-3/4" GALV	FIGURA 130RED.DE 1-1-3/4"GALV.	T FIG 130 1"-1"-3/4" GALV
11	146233	BICR.HEX SCREW DIN933-8 M6X15	TOR.EX.DIN933-8.8 B.TRI.M 6X15	VIS HEX DIN933-8.8 BICR.M6X15
12	149526	BICR.WASHER B DIN125-ST 6,4	ARAN.B DIN125-ST B.TRI. 6,4	RONDELLE B DIN125-ST BICR.6,4
13	150227	BICR HEX NUT DIN934-8 M6	TUER.EX.DIN934-8 B.TRI.M 6	ECROU HEX DIN934-8 BICR.M6
14	149609	CLAMP 25-40	ABRAZADERA 25- 40 *	BRIDE 25-40
15	508960	WATER INLET HOSE	TUBO ENTRADA AGUA	TUBE ENTREE EAU
	177931	PRESCORD HOSE 6ATM.D25 (1 METER)	TUBO PRESCORD 6ATM.D25 (1 METRO)	TUBE PRESCORD 6ATM.D25 (1 METRE)
16	515239	WATER INLET HOSE	TUBO ENTRADA AGUA	TUBE ENTREE EAU
	177931	PRESCORD HOSE 6ATM.D25 (1 METER)	TUBO PRESCORD 6ATM.D25 (1 METRO)	TUBE PRESCORD 6ATM.D25 (1 METRE)
17	149617	CONICAL END PIECE R-16 D25	TOPE CONICO REPRIMSA R-16 D25	ARRET CONIQUE R-16 D25

info@zipnasklade.ru
8(800)500-69-51

Nº	REF	DENOMINATION	DENOMINACIÓN	DENOMINATION
18	133744	THREADED BRASS FILTER 1"	FILTRO LATON FLT ROSC. 1" 0,5	FILTRE FILETE LAITON 1"
19	216382	WATER INLET SLEEVE	MANGUITO ENTRADA AGUA	MANCHON ENTREE EAU
	249516	WATER INLET SLEEVE (FOR USA AND CANADA ONLY)	MANGUITO ENTRADA AGUA-VAPOR (SOLO PARA USA Y CANADA)	MANCHON ENTREE EAU (SEULEMENT POUR USA ET CANADA)
20	216408	GASKET (EXCEPT FOR USA AND CANADA)	JUNTA D31XD20X2 (EXCEPTO PARA USA Y CANADA)	JOINT (SAUF POUR USA ET CANADA)
21	164194	WATER INLET HOSE RACCORDS 1" (EXCEPT FOR USA AND CANADA)	TUBO EPDM 1"X1500 C.RACORES* (EXCEPTO PARA USA Y CANADA)	TUBE ENTREE EAU RACCORDS 1" (SAUF POUR USA ET CANADA)
22	350371	DISTRIBUTOR	DISTRIBUIDOR	DISTRIBUTEUR
23	357624	CONICAL END-PECE R-16 D12	TOPE CONICO REPRIMSA R-16 D12	BOUCHON CONIQUE R-16 D12
24	156679	CONICAL END-PIECE R-16 D10	TOPE CONICO REPRIMSA R-16 D10	BOUCHON CONIQUE R-16 D10
25	156687	CONICAL END-PIECE R-16 D16	TOPE CONICO REPRIMSA R-16 D16	ARRET CONIQUE R-16 D16
26	155150	HOSE CLIP ASFA-L W2 8-16	ABRAZADERA ASFA-L W2 8-16	COLLIER ASFA-L W2 8-16
27	140509	BLACK POLYAMIDE CLAMP 7.5X360MM	BRIDA POLIAMIDA NEGRA 7.5X360MM	BRIDE POLYAMIDE NOIR 7.5X360MM
28	358085	WATER INLET HOSE	TUBO ENTRADA AGUA	TUBE ENTREE EAU
	323469	1 METER HOSE PARIGI D10XD16 (1 METER)	1 METRO TUBO PARIGI D10XD16 (1 METRO)	1 METRE TUBE PARIGI D10XD16 (1 METRE)
29	411132	WATER INLET HOSE	TUBO ENTRADA AGUA	TUBE ENTREE EAU
	323469	1 METER HOSE PARIGI D10XD16 (1 METER)	1 METRO TUBO PARIGI D10XD16 (1 METRO)	1 METRE TUBE PARIGI D10XD16 (1 METRE)
30	453712	WATER INLET HOSE	TUBO ENTRADA AGUA	TUBE ENTREE EAU
	323469	1 METER HOSE PARIGI D10XD16 (1 METER)	1 METRO TUBO PARIGI D10XD16 (1 METRO)	1 METRE TUBE PARIGI D10XD16 (1 METRE)
31	453704	WATER INLET HOSE	TUBO ENTRADA AGUA	TUBE ENTREE EAU
	323469	1 METER HOSE PARIGI D10XD16 (1 METER)	1 METRO TUBO PARIGI D10XD16 (1 METRO)	1 METRE TUBE PARIGI D10XD16 (1 METRE)
32	411363	WATER INLET HOSE	TUBO ENTRADA AGUA	TUBE ENTREE EAU
	323469	1 METER HOSE PARIGI D10XD16 (1 METER)	1 METRO TUBO PARIGI D10XD16 (1 METRO)	1 METRE TUBE PARIGI D10XD16 (1 METRE)
33	149534	BICR.WASHER B DIN125-ST 5,3	ARAN.B DIN125-ST BICR. 5,3	RONDELLE B BICR.DIN125-ST 5,3
34	327064	BICR.HEX SCREW DIN933-8 M5X 12	TOR.EX.DIN933-8.8 B.TRI.M 5X12	VIS.HEX.DIN933-8.8 BICR.M5X 12

info@zipnasklade.ru
8(800)500-69-51

Nº	REF	DENOMINATION	DENOMINACIÓN	DENOMINATION
		WITHOUT ILLUSTRATION	SIN ILUSTRACION	SANS ILLUSTRATION
	793604	THIRD WATER INLET KIT	KIT TERCERA ENTRADA AGUA HS-6040	KIT TROISIEME ENTREE EAU

info@zipnasklade.ru
8(800)500-69-51

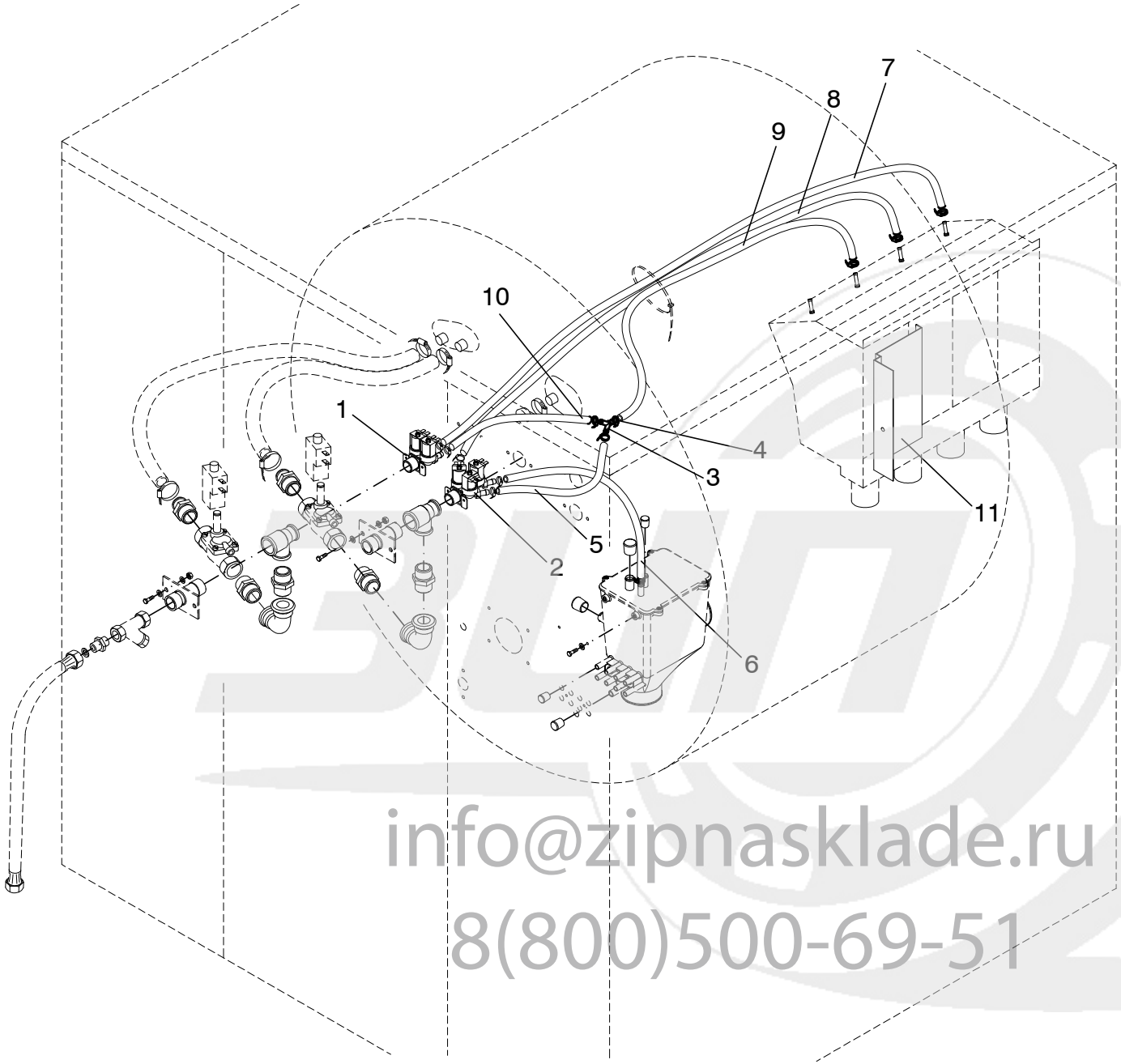

info@zipnasklade.ru
8(800)500-69-51

Nº	REF	DENOMINATION	DENOMINACIÓN	DENOMINATION
1	607705	THREE TRACK ELECTROVALVE	ELECTROVALVULA DOS VIAS	ELECTROVANNE TROIS VOIES
	332296	COIL 255043000000 12VCC	BOBINA 255043000000 12VCC	BOBINE 255043000000 12VCC
	300202	INTEGRAL GUIDE-MEMBRANE 30696	MEMBRANA-GUIA INTEGRAL 30696 *	MEMBRANE-GUIDE INTEGRALE 30696
	300194	YELLOW CASE 30053	ESTUCHE AMARILLO 30053	BOITE JAUNE 30053
	156257	REGULATOR 8 L/MIN (RED)	REGULADOR DE 8 L/MIN. (ROJO)	REGULATEUR 8 L/MIN (ROUGE)
2	607697	THREE TRACK ELECTROVALVE	ELECTROVALVULA TRES VIAS	ELECTROVANNE TROIS VOIES
	332296	COIL 255043000000 12VCC	BOBINA 255043000000 12VCC	BOBINE 255043000000 12VCC
	300202	INTEGRAL GUIDE-MEMBRANE 30696	MEMBRANA-GUIA INTEGRAL 30696 *	MEMBRANE-GUIDE INTEGRALE 30696
	300194	YELLOW CASE 30053	ESTUCHE AMARILLO 30053	BOITE JAUNE 30053
	156257	REGULATOR 8 L/MIN (RED)	REGULADOR DE 8 L/MIN. (ROJO)	REGULATEUR 8 L/MIN (ROUGE)
3	152165	BRANCH	BIFURCACION	BIFURCATION
4	155150	HOSE CLIP ASFA-L W2 8-16	ABRAZADERA ASFA-L W2 8-16	COLLIER ASFA-L W2 8-16
5	410621	WATER INLET HOSE	TUBO ENTRADA AGUA	TUYAU ENTRÉE EAU
6	411389	WATER INLET HOSE	TUBO ENTRADA AGUA	TUBE ENTREE EAU
7	453704	WATER INLET HOSE	TUBO ENTRADA AGUA	TUBE ENTREE EAU
8	455907	WATER INLET HOSE	TUBO ENTRADA AGUA	TUBE ENTREE EAU
9	358085	WATER INLET HOSE	TUBO ENTRADA AGUA	TUBE ENTREE EAU
10	432641	WATER INLET HOSE	TUBO ENTRADA AGUA	TUBE ENTREE EAU
11	530162	SOAP DISPENSER INSERT	INSERTO DOSIFICADOR	INSERT BAC A PRODUITS

info@zipnasklade.ru
8(800)500-69-51

HS-6040 IC
EH090 IC
EH090 CC

10

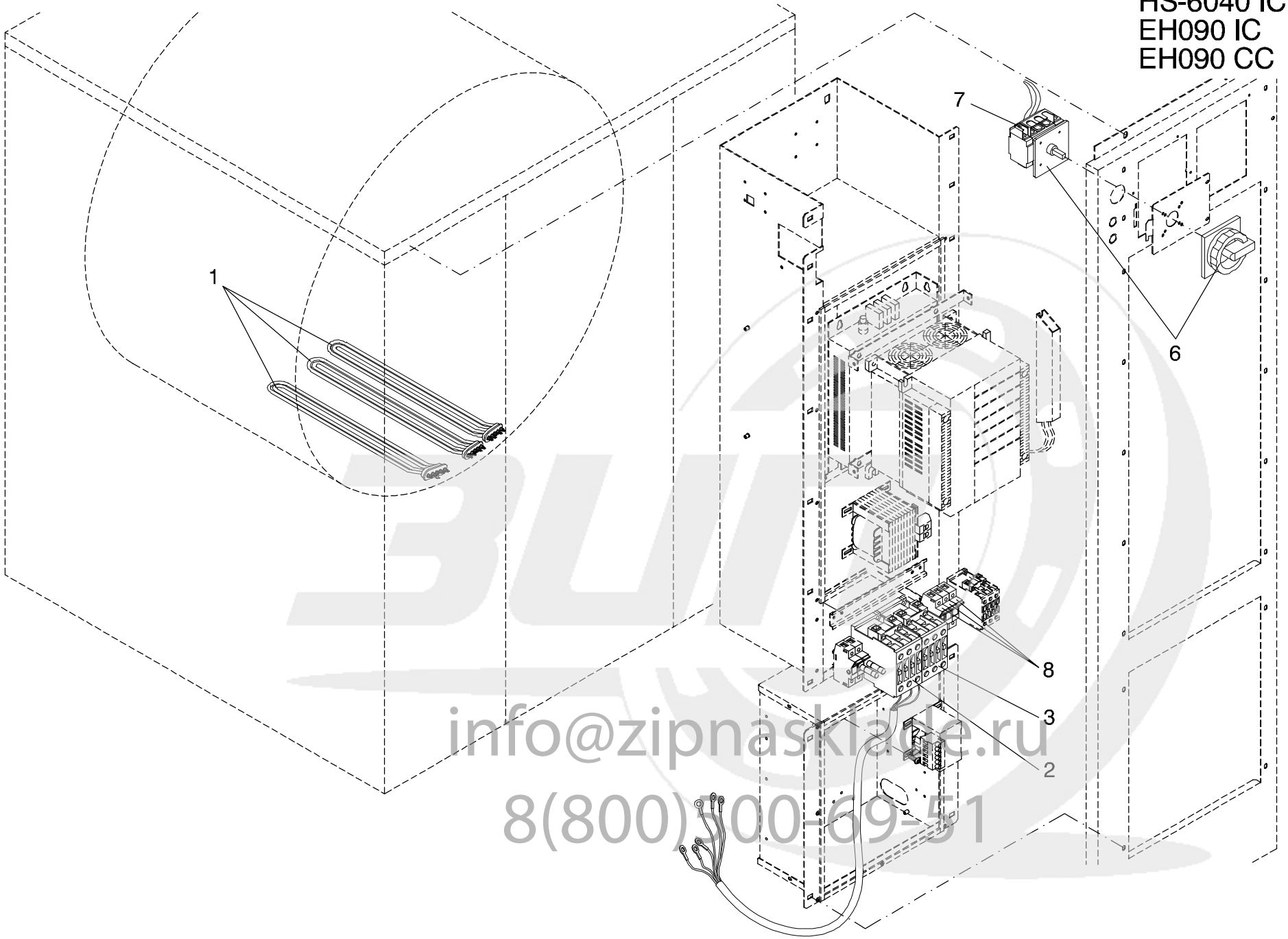

info@zipnasklade.ru
8(800)100-69-51

503383a_10

Nº	REF	DENOMINATION	DENOMINACIÓN	DENOMINATION
		ELECTRIC HEATING KITS	KITS CALEFACCION ELECTRICA	KITS CHAUFFAGE ELECTRIQUE
	793679	KIT E.H. 200-208-220-230V HS-6040 (FOR MOD. INTELI CONTROL)	KIT CAL.ELEC.200-208-220-230V HS-6040 (PARA MOD. INTELI CONTROL)	KIT CH.E. 200-208-220-230V HS-6040 (POUR MOD. INTELI CONTROL)
	793687	KIT E.H. 240(208÷240)V HS-6040 (FOR MOD. INTELI CONTROL)	KIT CAL.ELEC.240(208÷240)V HS-6040 (PARA MOD. INTELI CONTROL)	KIT CH.E. 240(208÷240)V HS-6040 (POUR MOD. INTELI CONTROL)
	793695	KIT E.H. 380-400V HS-6040 (FOR MOD. INTELI CONTROL)	KIT CAL.ELEC.380-400V HS-6040 (PARA MOD. INTELI CONTROL)	KIT CH.E. 380-400V HS-6040 (POUR MOD. INTELI CONTROL)
	793703	KIT E.H. 415V HS-6040 (FOR MOD. INTELI CONTROL)	KIT CAL.ELEC.415V HS-6040 (PARA MOD. INTELI CONTROL)	KIT CH.E. 415V HS-6040 (POUR MOD. INTELI CONTROL)
1	321018	HEATER 230V 7200W (FOR 200V-208V-220V-230V-380V-400V)	CALEFACTOR 230V 7200W (PARA 200V-208V-220V-230V-380V-400V)	RESISTANCE 230V 7200W (POUR 200V-208V-220V-230V-380V-400V)
	321026	HEATER 240V 7200W (FOR (208÷240)V-240V-415V)	CALEFACTOR 240V 7200W (PARA (208÷240)V-240V-415V)	RESISTANCE 240V 7200W (POUR (208÷240)V-240V-415V)
2	454488	HEATING CONTACTOR WIRES (CONTACTOR INCLUDED) (FOR 380V-400V-415V)	CABLES CONTATCTOR CALEFACCION (INCLUYE CONTACTOR) (PARA 380V-400V-415V)	CABLES CONTACTEUR CHAUFFAGE (COMPRIS CONTACTEUR) (POUR 380V-400V-415V)
	320846	CONTACTOR 3RT10 24-1AL2	CONTACTOR 3RT10 24-1AL200	CONTACTEUR 3RT10 24-1AL2
	321240	COIL 3RT1924-5AL21 230-50/60	BOBINA 3RT1924-5AL21 230-50/60	BOBINE 3RT1924-5AL21 230-50/60
3	454496	HEATING CONTACTOR WIRES (FOR MOD. INTELI CONTROL) (CONTACTOR INCLUDED) (FOR 200V-208V-220V-230V-240V)	CABLES CONTACTOR CALEFACCION (PARA MOD. INTELI CONTROL) (INCLUYE CONTACTOR) (PARA 200V-208V-220V-230V-240V)	CABLES CONTACTEUR CHAUFFAGE (POUR MOD. INTELI CONTROL) (COMPRIS CONTACTEUR) (POUR 200V-208V-220V-230V-240V)
	320846	CONTACTOR 3RT10 24-1AL2	CONTACTOR 3RT10 24-1AL200	CONTACTEUR 3RT10 24-1AL2
	321240	COIL 3RT1924-5AL21 230-50/60	BOBINA 3RT1924-5AL21 230-50/60	BOBINE 3RT1924-5AL21 230-50/60
	531210	HEATING CONTACTOR WIRES (COIN CTRL MODELS ONLY) (CONTACTOR INCLUDED) (FOR 200V-208V-220V-230V-240V)	CABLES CONTACTOR CALEFACCION (PARA MODELOS A COIN CONTROL) (INCLUYE CONTACTOR) (PARA 200V-208V-220V-230V-240V)	CABLES CONTACTEUR CHAUFFAGE (POUR MODELE COIN CONTROL) (COMPRIS CONTACTEUR) (POUR 200V-208V-220V-230V-240V)
	320846	CONTACTOR 3RT10 24-1AL2	CONTACTOR 3RT10 24-1AL200	CONTACTEUR 3RT10 24-1AL2
	321240	COIL 3RT1924-5AL21 230-50/60	BOBINA 3RT1924-5AL21 230-50/60	BOBINE 3RT1924-5AL21 230-50/60
6	344135	IPAQUET SWITCH.3LD2 504-0TK53	INTERRUP.PAQUET.3LD2 504-0TK53	INTERRUP.PAQUET.3LD2 504-0TK53
7	344150	TERMINAL PE 3LD9250-2BA	BORNE PE 3LD9250-2BA	BORNE PE 3LD9250-2BA

info@zipnasklade.ru
8(800)500-69-51

Nº	REF	DENOMINATION	DENOMINACIÓN	DENOMINATION
		FROM MACHINE Nr: 2.150.392 1.500.101	A PARTIR DE LA MAQUINA No : 2.150.392 1.500.101	A PARTIR DE LA MACHINE NR: 2.150.392 1.500.101
4	507988	FUSE 10X38 UL-ATQ 20 A * (CANCELLED)	FUSIBLE 10X38 UL-ATQ 20 A * (ANULADO)	FUSIBLE 10X38 UL-ATQ 20 A * (ANNULE)
	307181	FUSE GG 10X38 10A (CANCELLED)	FUSIBLE GG 10X38 10A S218194 (ANULADO)	FUSIBLE GG 10X38 10A (ANNULE)
5	306431	FUSE HOLDER 32A 10X38 (CANCELLED)	PORTAFUSIBLES 32A 10X38 1P* (ANULADO)	PORTE-FUSIBLE 32A 10X38 (ANNULE)
8	564880	AUTOMATIC SWITCH 20A (FOR 200V-208V-220V-230V-240V) (FOR (208÷240)V)	INTERRUPTOR AUT. 20A CURVA D* (PARA 200V-208V-220V-230V-240V) (PARA (208÷240)V)	INTERRUPTEUR AUT. 20A (POUR 200V-208V-220V-230V-240V) (POUR (208÷240)V)
	544429	AUTOMATIC SWITCH 10A (FOR 380V-400V-415V)	INTERRUPTOR AUT. 10A CURVA D* (PARA 380V-400V-415V)	INTERRUPTEUR AUT.10A (POUR 380V-400V-415V)

info@zipnasklade.ru
8(800)500-69-51

HS-6040 IC
EH090 IC
EH090 CC

10

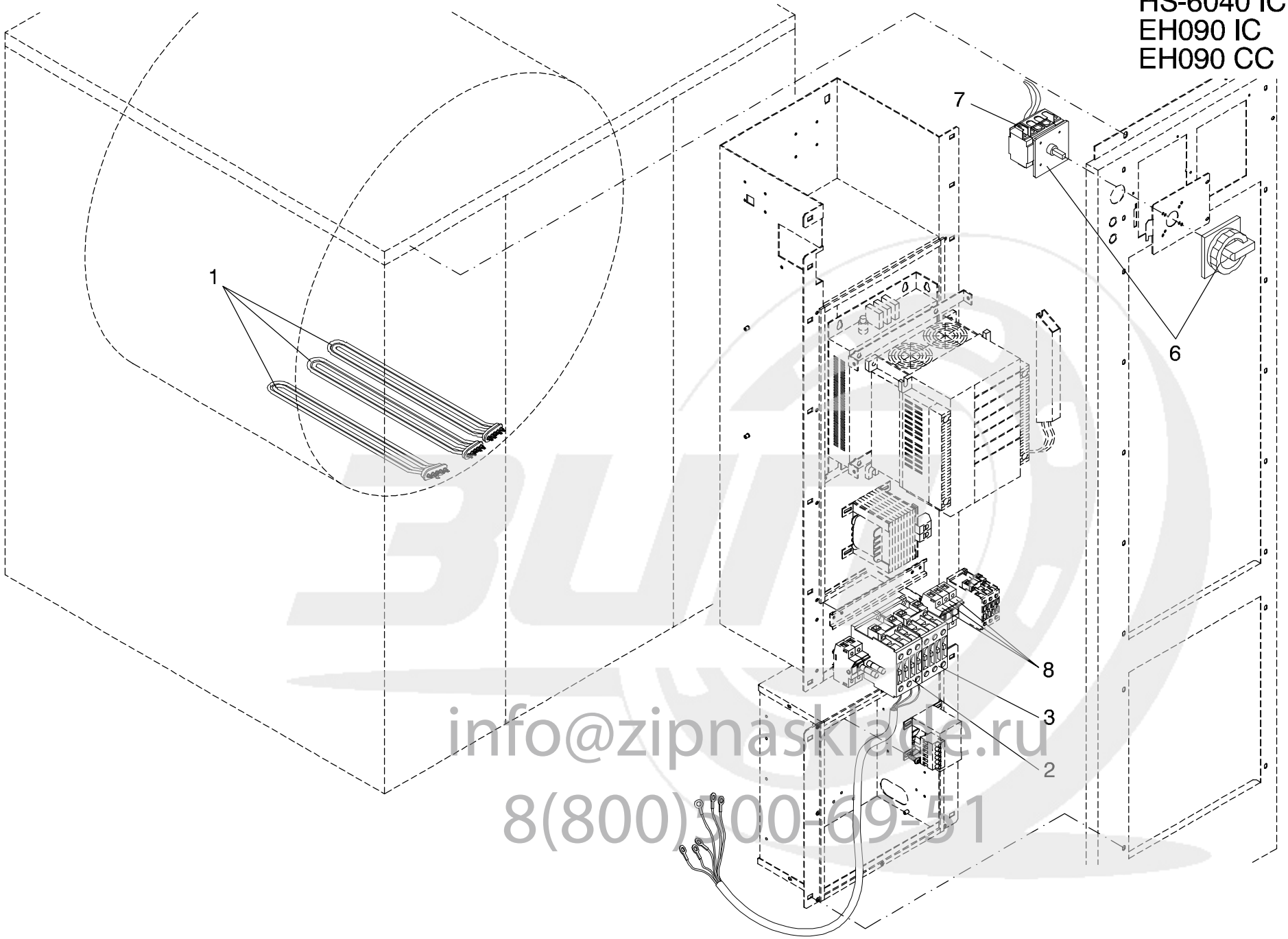

info@zipnasklade.ru
8(800)100-69-51

503383a_10

Nº	REF	DENOMINATION	DENOMINACIÓN	DENOMINATION
		ELECTRIC HEATING KITS	KITS CALEFACCION ELECTRICA	KITS CHAUFFAGE ELECTRIQUE
	793679	KIT E.H. 200-208-220-230V HS-6040 (FOR MOD. INTELI CONTROL)	KIT CAL.ELEC.200-208-220-230V HS-6040 (PARA MOD. INTELI CONTROL)	KIT CH.E. 200-208-220-230V HS-6040 (POUR MOD. INTELI CONTROL)
	793687	KIT E.H. 240(208÷240)V HS-6040 (FOR MOD. INTELI CONTROL)	KIT CAL.ELEC.240(208÷240)V HS-6040 (PARA MOD. INTELI CONTROL)	KIT CH.E. 240(208÷240)V HS-6040 (POUR MOD. INTELI CONTROL)
	793695	KIT E.H. 380-400V HS-6040 (FOR MOD. INTELI CONTROL)	KIT CAL.ELEC.380-400V HS-6040 (PARA MOD. INTELI CONTROL)	KIT CH.E. 380-400V HS-6040 (POUR MOD. INTELI CONTROL)
	793703	KIT E.H. 415V HS-6040 (FOR MOD. INTELI CONTROL)	KIT CAL.ELEC.415V HS-6040 (PARA MOD. INTELI CONTROL)	KIT CH.E. 415V HS-6040 (POUR MOD. INTELI CONTROL)
1	321018	HEATER 230V 7200W (FOR 200V-208V-220V-230V-380V-400V)	CALEFACTOR 230V 7200W (PARA 200V-208V-220V-230V-380V-400V)	RESISTANCE 230V 7200W (POUR 200V-208V-220V-230V-380V-400V)
	321026	HEATER 240V 7200W (FOR (208÷240)V-240V-415V)	CALEFACTOR 240V 7200W (PARA (208÷240)V-240V-415V)	RESISTANCE 240V 7200W (POUR (208÷240)V-240V-415V)
2	454488	HEATING CONTACTOR WIRES (CONTACTOR INCLUDED) (FOR 380V-400V-415V)	CABLES CONTATCTOR CALEFACCION (INCLUYE CONTACTOR) (PARA 380V-400V-415V)	CABLES CONTACTEUR CHAUFFAGE (COMPRIS CONTACTEUR) (POUR 380V-400V-415V)
	320846	CONTACTOR 3RT10 24-1AL2	CONTACTOR 3RT10 24-1AL2	CONTACTEUR 3RT10 24-1AL2
	321240	COIL 3RT1924-5AL21 230-50/60	BOBINA 3RT1924-5AL21 230-50/60	BOBINE 3RT1924-5AL21 230-50/60
3	454496	HEATING CONTACTOR WIRES (FOR MOD. INTELI CONTROL) (CONTACTOR INCLUDED) (FOR 200V-208V-220V-230V-240V)	CABLES CONTACTOR CALEFACCION (PARA MOD. INTELI CONTROL) (INCLUYE CONTACTOR) (PARA 200V-208V-220V-230V-240V)	CABLES CONTACTEUR CHAUFFAGE (POUR MOD. INTELI CONTROL) (COMPRIS CONTACTEUR) (POUR 200V-208V-220V-230V-240V)
	320846	CONTACTOR 3RT10 24-1AL2	CONTACTOR 3RT10 24-1AL2	CONTACTEUR 3RT10 24-1AL2
	321240	COIL 3RT1924-5AL21 230-50/60	BOBINA 3RT1924-5AL21 230-50/60	BOBINE 3RT1924-5AL21 230-50/60
	531210	HEATING CONTACTOR WIRES (COIN CTRL MODELS ONLY) (CONTACTOR INCLUDED) (FOR 200V-208V-220V-230V-240V)	CABLES CONTACTOR CALEFACCION (PARA MODELOS A COIN CONTROL) (INCLUYE CONTACTOR) (PARA 200V-208V-220V-230V-240V)	CABLES CONTACTEUR CHAUFFAGE (POUR MODELE COIN CONTROL) (COMPRIS CONTACTEUR) (POUR 200V-208V-220V-230V-240V)
	320846	CONTACTOR 3RT10 24-1AL2	CONTACTOR 3RT10 24-1AL2	CONTACTEUR 3RT10 24-1AL2
	321240	COIL 3RT1924-5AL21 230-50/60	BOBINA 3RT1924-5AL21 230-50/60	BOBINE 3RT1924-5AL21 230-50/60
6	344135	IPAQUET SWITCH.3LD2 504-0TK53	INTERRUP.PAQUET.3LD2 504-0TK53	INTERRUP.PAQUET.3LD2 504-0TK53
7	344150	TERMINAL PE 3LD9250-2BA	BORNE PE 3LD9250-2BA	BORNE PE 3LD9250-2BA

info@zipnasklade.ru
8(800)500-69-51

Nº	REF	DENOMINATION	DENOMINACIÓN	DENOMINATION
		FROM MACHINE Nr: 2.150.392 1.500.101	A PARTIR DE LA MAQUINA No : 2.150.392 1.500.101	A PARTIR DE LA MACHINE NR: 2.150.392 1.500.101
4	507988	FUSE 10X38 UL-ATQ 20 A * (CANCELLED)	FUSIBLE 10X38 UL-ATQ 20 A * (ANULADO)	FUSIBLE 10X38 UL-ATQ 20 A * (ANNULE)
	307181	FUSE GG 10X38 10A (CANCELLED)	FUSIBLE GG 10X38 10A S218194 (ANULADO)	FUSIBLE GG 10X38 10A (ANNULE)
5	306431	FUSE HOLDER 32A 10X38 (CANCELLED)	PORTAFUSIBLES 32A 10X38 1P* (ANULADO)	PORTE-FUSIBLE 32A 10X38 (ANNULE)
8	564880	AUTOMATIC SWITCH 20A (FOR 200V-208V-220V-230V-240V) (FOR (208÷240)V)	INTERRUPTOR AUT. 20A CURVA D* (PARA 200V-208V-220V-230V-240V) (PARA (208÷240)V)	INTERRUPTEUR AUT. 20A (POUR 200V-208V-220V-230V-240V) (POUR (208÷240)V)
	544429	AUTOMATIC SWITCH 10A (FOR 380V-400V-415V)	INTERRUPTOR AUT. 10A CURVA D* (PARA 380V-400V-415V)	INTERRUPTEUR AUT.10A (POUR 380V-400V-415V)

info@zipnasklade.ru
8(800)500-69-51

HS-6040 IC (11)
EH090 IC
EH090 CC

info@zipnasklade.ru
8(800)500-69-51

503383a_11

Nº	REF	DENOMINATION	DENOMINACIÓN	DENOMINATION
		STEAM HEATING KITS	KITS CALEFACCION VAPOR	KITS CHAUFFAGE VAPEUR
	793794	STEAM KIT 50Hz HS-6040 (FOR MOD. INTELI CONTROL)	KIT CAL.VAPOR 50Hz HS-6040 (PARA MOD. INTELI CONTROL)	KIT CHAUF.VAP. 50Hz HS-6040 (POUR MOD. INTELI CONTROL)
	793802	STEAM KIT 60Hz HS-6040 (FOR MOD. INTELI CONTROL)	KIT CAL.VAPOR 60Hz HS-6040 (PARA MOD. INTELI CONTROL)	KIT CHAUF.VAP. 60Hz HS-6040 (POUR MOD. INTELI CONTROL)
1	214916	STEAM DISTRIBUTOR	DISTRIBUIDOR VAPOR	DISTRIBUTEUR VAPEUR
2	121962	HEATER INLET LID	CIERRE ENTRADA CALEFACTOR *	FERMETURE ENTREE RESISTANCE
3	109777	COPPER GASKET 1/2"	12504 JUNTA COBRE 1/2"	JOINT CUIVRE 1/2"
4	217745	STEAM INLET RACCORD	RACOR ENTRADA VAPOR	RACCORD ENTREE VAPEUR
5	504563	STEAM INLET JOINTING	UNION ENTRADA VAPOR	UNION ENTREE VAPEUR
6	357020	STEAM INLET JOINTING	UNION ENTRADA VAPOR	UNION ENTREE VAPEUR
7	176479	COUPLING SCREW 3/4"	10904 TORNILLO UNION MM3/4"	VIS UNION 3/4"
8	129502	ELBOW FIG. 92 3/4" GALV.	FIGURA 92 DE 3/4" GALV.	COUDE FIG. 92 3/4" GALV.
9	176461	FIG. 221 3/4" GALV.	FIGURA 221 DE 3/4" GALV.	FIG. 221 3/4" GALV.
10	150227	BICR HEX NUT DIN934-8 M6	TUER.EX.DIN934-8 B.TRI.M 6	ECROU HEX DIN934-8 BICR.M6
11	149526	BICR.WASHER B DIN125-ST 6,4	ARAN.B DIN125-ST B.TRI. 6,4	RONDELLE B DIN125-ST BICR.6,4
12	146233	BICR.HEX SCREW DIN933-8 M6X15	TOR.EX.DIN933-8.8 B.TRI.M 6X15	VIS HEX DIN933-8.8 BICR.M6X15
14	583377	STEAM VALVE BODY 3/4"	CUERPO VALV.VAPOR 3/4" *	CORPS VANNE VAPEUR 3/4"
	583385	STEAM VALVE COIL 208-240V 50/60Hz	BOBINA V.VAPOR 208-240V 50/60Hz *	BOBINE V. VAPEUR 208-240V 50/60Hz
15	130005	INNER SLEEVE FIG.531 3/4" GALV	FIGURA 531 DE 3/4" GALV.	MANCHON INTERIEUR FIG.531 3/4"
16	249508	STEAM INLET SLEEVE (FOR USA AND CANADA ONLY)	MANGUITO ENTRADA VAPOR (SOLO PARA USA Y CANADA)	MANCHON ENTREE VAPEUR (SEULEMENT POUR USA ET CANADA)
17	133736	STRAINER THREADED 3/4" 0,3 PN16	FILTRO GG25 ROSC.3/4" PN16 0'3MM INOX	FILTRE FILETE 3/4" 0,3 PN16
19	446658	STEAM ELEC.INST. (FOR MOD. INTELI CONTROL)	INST. ELEC. VAPOR (PARA MOD. INTELI CONTROL)	INST. ELEC. VAPEUR (POUR MOD. INTELI CONTROL)
	530485	STEAM ELEC.INST. (COIN CTRL MODELS ONLY)	INST. ELEC. VAPOR (PARA MODELOS A COIN CONTROL)	INST. ELEC. VAPEUR (POUR MODELE COIN CONTROL)
20	244632	STEAM INLET	ENTRADA VAPOR	ENTREE VAPEUR
21	140434	CLAMP 2221	BRIDA UNEX 2221 *	BRIDE 2221
22	454009	END-PIECE PROFILE	PERFIL TOPE	PROFILE ARRET

info@zipnasklade.ru
8(800)500-69-51

Nº	REF	DENOMINATION	DENOMINACIÓN	DENOMINATION
23	183400	PLATE SCREW ST-4, 20 P.F. C/AL.T25	TORNILLO CHAPA ST-4 (ESPECIAL)*	VIS PLAQUE ST-4, 20 P.F. C/AL.T25

info@zipnasklade.ru
8(800)500-69-51

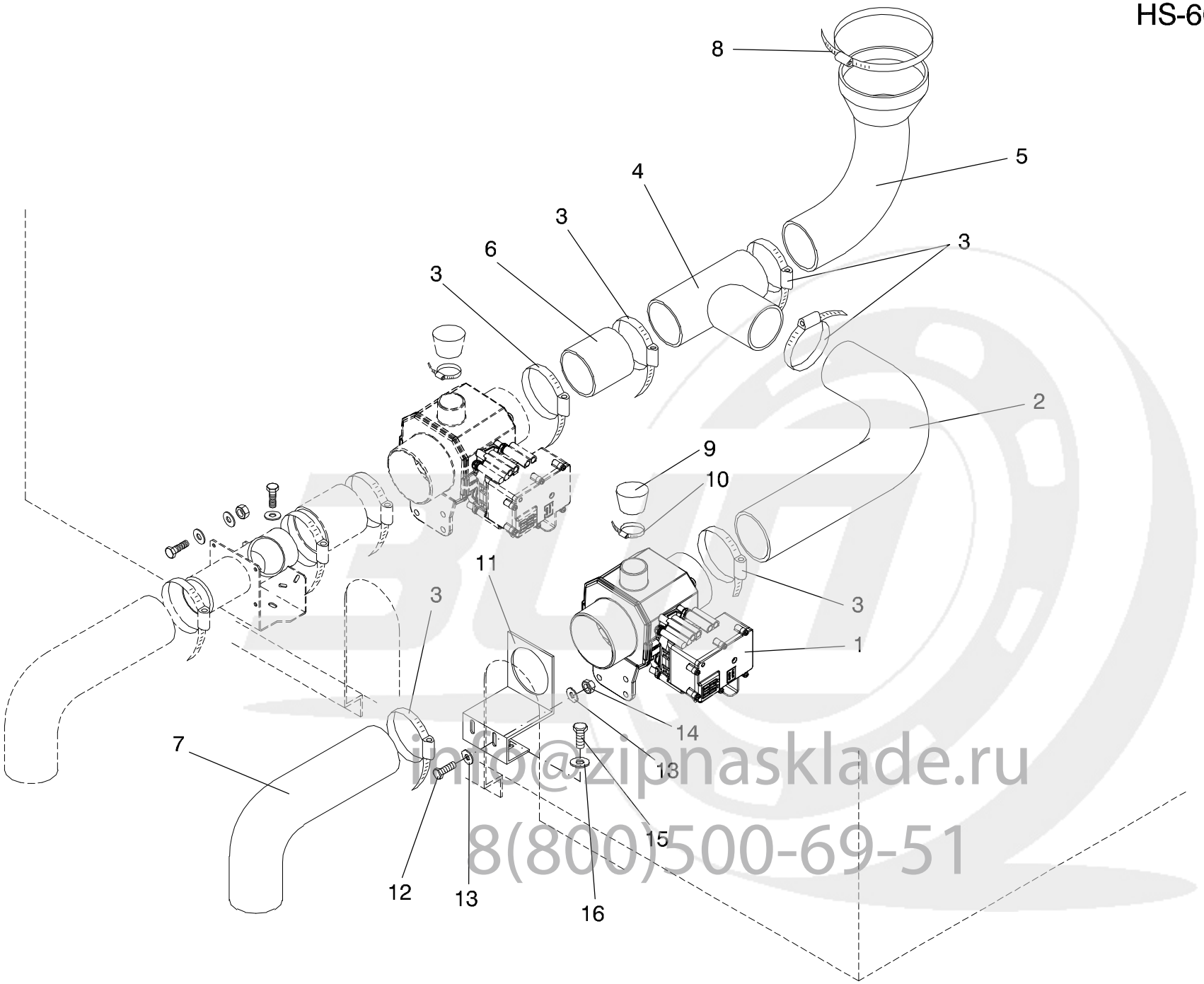

info@zipnasklade.ru
8(800)500-69-51

Nº	REF	DENOMINATION	DENOMINACIÓN	DENOMINATION
1	600577	DRAIN G3-C-180 (NORMALLY CLOSED)	DESAGÜE G3-C-180 (NORMALMENTE CERRADO)	VIDANGE G3-C-180 (NORMALEMENT FERME)
2	503276	RUBBER ELBOW D73X400X210	CODO GOMA D73X350X275	COUDE GOMME D73X400X210
3	132340	CLAMP REF.30173380-2 D80-100	ABRAZADERA REF.30173380-2 D80-100	BRIDE REF.30173380-2 D80-100
4	178152	UNION T	TE UNION	T UNION
5	358168	DRAIN HOSE	TUBO DESAGÜE	TUBE VIDANGE
6	277053	DRAIN JOINTING HOSE	TUBO UNION DESAGUE	TUBE UNION VIDANGE
7	163253	DRAIN OUTLET HOSE	TUBO SALIDA DESAGÜE	TUBE SORTIE VIDANGE
8	358192	CLAMP 130-150 *	ABRAZADERA 130-150 *	BRIDE 130-150 *
9	135004	CONICAL END-PIECE REPRIMSA R16	TOPE CONICO REPRIMSA R-16 D30	ARRET CONIQUE REPRIMSA R16 D30
10	149609	CLAMP 25-40	ABRAZADERA 25- 40 *	BRIDE 25-40
11	243717	DRAIN BRACKET	SOPORTE DESAGÜE	SUPPORT VIDANGE
12	144881	INOX HEX SCREW DIN933 M 6X16	TOR.EX.DIN933INOX A2-70 M 6X16	VIS HEX INOX DIN933 M 6X16
13	149310	INOX.A2 WASHER DIN125 6,4	ARAN. DIN125 INOX A2 6,4	RONDELLE INOX.A2 DIN125 6,4
14	149971	INOX. HEX. NUT DIN 934 M-6	TUER.EX.DIN934 INOX A2-70 M 6	ECROU HEX. INOX. DIN 934 M-6
15	144964	INOX HEX SCREW DIN 933 M-8X16	TOR.EX.DIN933INOX A2-70 M 8X16	VIS HEX INOX DIN 933 M-8X16
16	149351	INOX A2 WASHER DIN 125 8,4	ARAN. DIN125 INOX A2 8,4	RONDELLE INOX A2 DIN 125 8,4
		WITHOUT ILLUSTRATION	SIN ILUSTRACION	SANS ILLUSTRATION
	793562	SECOND DRAIN KIT	KIT 2º DESAGUE HS-6040	KIT DEUXIEME VIDANGE

info@zipnasklade.ru
8(800)500-69-51

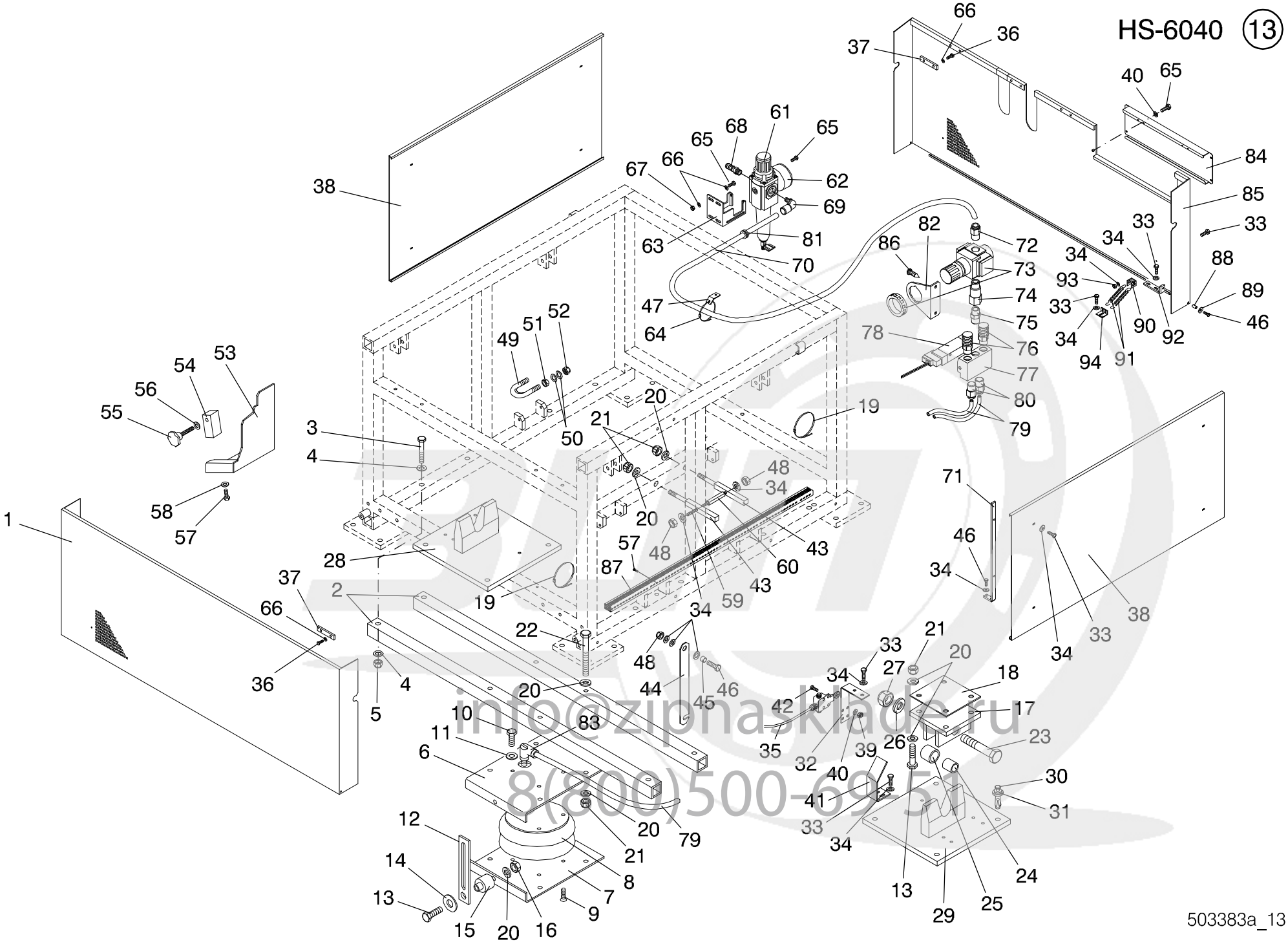

info@zipnaskladu.ru
8(800)500-69-51

503383a_13

Nº	REF	DENOMINATION	DENOMINACIÓN	DENOMINATION
1	545772	FRONT PROTECTION COVER	TAPA PROTECCION ANTERIOR	COUVERCLE PROTECTION AVANT
2	545764	ACTUATOR BEAM	VIGA ACTUADOR	POUTRE AGISSEMENT
3	305433	BICR.HEX.SCREW DIN931-8 M12X90	TOR.EX.DIN931-8.8B.TRI.M12X 90	VIS.HEX.DIN931-8.8 BICR.M12X90
4	149419	BICR.WASHER B DIN125-ST 13	ARAN.B DIN125-ST B.TRI.13	RONDELLE B DIN125-ST BICR.13
5	150656	SELF-LOCKING NUT DIN985-8 B.TRI.M12	TUER.AUTOB.DIN985-8 B.TRI.M12	ECROU AUTOBLOCANT DIN985-8 B.TRI.M12
6	293019	ACTUATOR BRACKET	MENSULA ACTUADOR	SUPPORT ACTUATEUR
7	293027	ACTUATOR BRACKET	MENSULA ACTUADOR	SUPPORT ACTUATEUR
8	305425	PNEUMATIC DRIVE ORIA M-90	ACCIONADOR NEUMATICO ORIA M-90*	ACTIONNEMENT PNEUMATIQUE ORIA M-90
9	175653	ALLEN SCREW 10.9 DIN7991M-8X25	TOR.AV.ALL.10.9 DIN7991 B.TRI M8X25	VIS ALLEN DIN 7991 10.9M-8X25
10	192849	BIC.HEX SCREW DIN933-8 M-8X25	TOR.EX.DIN933-8.8 B.TRI.M 8X25	VIS HEX.DIN933-8,8 BICR.M-8X25
11	149518	BICR.WASHER B DIN125-ST 8,4	ARAN.B DIN125-ST B.TRI. 8,4	RONDELLE.B DIN125-ST BICR.8,4
12	293050	ACTUATOR COURSE LIMITATOR	LIMITADOR CARRERA ACTUADOR	LIMITATUER COURSE ACTUATEUR
13	176172	HEX SCREW DIN 933 8,8 M14x55 TRIVALENT	TORNILLO HEXAGONAL DIN 933 8,8 M14x55 TR	VIS HEXAGONALE DIN 933 8,8 M14x55 TRIVAL
14	219071	WASHER 40X15X5	ARANDELA 40X15X5 TRIVALEN.	RONDELLE 40X15X5
15	293126	END PIECE COURSE LIMITATOR	TOPE LIMITADOR CARRERA	ARRET LIMITATEUR COURSE
16	150342	BICR.HEX.NUT REB.DIN934-8 M 14	TUER.EX.RB.DIN936-8 B.TRI.M14	ECROU HEX.REB DIN936-8 BIC.M14
17	257865	TILTING HINGE	CHARNELA BASCULANTE	CHARNIERE BASCULANT
18	259614	HOLDING-DOWN SUPPLEMENT	SUPLEMENTO ANCLAJE	SUPPLEMENT SCELLEMENT
19	140509	BLACK POLYAMIDE CLAMP 7.5X360MM	BRIDA POLIAMIDA NEGRA 7.5X360MM	BRIDE POLYAMIDE NOIR 7.5X360MM
20	149393	BICR WASHER B DIN125-ST 15	ARAN.B DIN125-ST B.TRI.15	RONDELLE B BICR DIN125-ST 15
21	164350	SELF-LOCKING NUT DIN985-8 B.TRI.M14	TUER.AUTOB.DIN985-8 B.TRI.M14	ECROU AUTOBLOCANT DIN985-8 B.TRI.M14
22	147033	BIC.HEX SCREW DIN931-8 M14X130	TOR.EX.DIN931-88 B.TRI.M14X130	VIS HEX BICR DIN931-8 M14X130
23	146993	BIC.HEX SCREW DIN931-8 M20X100	TOR.EX.DIN931-88 B.TRI.M20X100	VIS HEX DIN931-8 BICR.M20X100
24	257873	ARTICULATION SLEEVE	CASQUILLO ARTICULACION	FRETTE ARTICULATION
25	187245	SELFOIL SLEEVE B11A40-50-40	COJ. SELFOIL B11A40-50-40	FRETTE SELFOIL B11A40-50-40
26	149427	BICR WASHER B DIN125-ST 21	ARAN.B DIN125-ST B.TRI.21	RONDELLE B BICR.DIN125-ST 21
27	186866	SELF-LOCKING NUT DIN985-8B.TRI.M20	TUER.AUTOBL.DIN985-8B.TRI.M20	ECROU AUTOBLOCANT DIN985-8B.TRI.M20
28	283184	HOLDING-DOWN PIECE	HORQUILLA ANCLAJE	PIECE SCELLEMENT

info@zipnasklade.ru
8(800)500-69-51

Nº	REF	DENOMINATION	DENOMINACIÓN	DENOMINATION
29	283242	HOLDING-DOWN PIECE	HORQUILLA ANCLAJE	PIECE SCELLEMENT
30	189746	METALLIC END PIECE REIDO T-16 C	TACO METALICO REIDO T-16 C	ARRET METALLIQUE REIDO T-16 C
31	110726	WASHER	ARANDELA 34X13X4 TRIVALEN.	RONDELLE
32	283044	LIMIT SWITCH BRACKET	SOPORTE FINAL DE CARRERA	SUPPORT FIN DE COURSE
33	146233	BICR.HEX SCREW DIN933-8 M6X15	TOR.EX.DIN933-8.8 B.TRI.M 6X15	VIS HEX DIN933-8.8 BICR.M6X15
34	149526	BICR.WASHER B DIN125-ST 6,4	ARAN.B DIN125-ST B.TRI. 6,4	RONDELLE B DIN125-ST BICR.6,4
35	456640	ELEC.INST. TILT	INST. ELEC. TILT	INST. ELEC. TILT
	327304	LIMIT SWITCH M4VH 355-20ZM20	FINAL CARRERA M4VH 355-20ZM20*	FIN DE COURSE M4VH 355-20ZM20
	456673	DISTRIBUTOR REF.TSD-171717G	DISTRIBUIDOR REF.TSD-171717G	DISTRIBUTEUR REF.TSD-171717G
	456665	RACCORD M20 REF.MIR-17M20G	RACOR M20 REF.MIR-17M20G	RACCORD M20 REF.MIR-17M20G
	330324	NYLOFIX HOSE DIN17 REF.AGT-17G (1 METER)	TUBO NYLOFIX DN17 REF.AGT-17G (1 METRO)	TUBE NYLOFIX DIN17 REF.AGT-17G (1 METRE)
36	146241	BICR.HEX SCREW DIN933-8.8 M4X6	TOR.EX.DIN933-4.8 B.TRI.M 4X 6	VIS HEX DIN933-8.8 BICR M 4X 6
37	289397	COVERS SEPARATOR	SEPARADOR TAPAS	SEPARATEUR COUVERCLES
38	287623	SIDE PROTECTION COVER	TAPA PROTECCION LATERAL	COUVERCLE PROTECTION LATERAL
39	176826	SELF-LOCKING NUT DIN985-8 B.TRI.M5	TUER.AUTOBL.DIN985-8 B.TRI.M5	ECROU AUTOBLOCANT DIN 985-8 B.TRI.M5
40	149534	BICR.WASHER B DIN125-ST 5,3	ARAN.B DIN125-ST BICR. 5,3	RONDELLE B BICR.DIN125-ST 5,3
41	283069	LIMIT SWITCH DRIVE	ACCIONADOR FINAL DE CARRERA	ACCIONNEMENT FIN DE COURSE
42	145748	SCREW DIN85 INOX A2-70 M5X45	TOR.PLA.DIN85 INOX A2-70 M5X45	VIS P DIN85 INOX A2-70 M5X45
43	512947	SUSPENDED SET END-PIECE	TOPE GRUPO FLOTANTE	ARRET GROUPE SUSPENDU
44	553198	DOOR HOOK	GANCHO ESCOTILLA	CROCHET HUBLOT
45	189696	SELFOIL SLEEVE B11A 6-10-5	COJ. SELFOIL B11A 6-10- 5	FRETTE SELFOIL B11A 6-10-5
46	146316	BICR.HEX SCREW DIN933-8 M-6X20	TOR.EX.DIN933-8.8 B.TRI.M 6X20	VIX HEX BICR.DIN933-8.8 M-6X20
47	454827	PNEUMATIC HOSE FIXING PLATE	CHAPA FIJACION TUBO NEUMATICO	PLAQUE FIXATION TUBE PNEUMATIQUE
48	176834	SELF-LOCKING NUT DIN985-8 B.TRI.M6	TUER.AUTOBL.DIN985-8 B.TRI.M6	ECROU AUTOBLOCANT DIN985-8 B.TRI.M6
49	258210	DOOR HOOK FIXING	SUJECCION GANCHO ESCOTILLA	FIXATION CROCHET HUBLOT
50	149328	INOX A2 WASHER DIN 125 4,3	ARAN. DIN125 INOX A2 4,3	RONDELLE INOX A2 DIN 125 4,3
51	149922	INOX HEX. NUT DIN 934 M-4	TUER.EX.DIN934 INOX A2-70 M 4	ECROU HEX. INOX DIN 934 M-4
52	176792	SELF-LOCKING NUT DIN985 INOX M 4	TUER.AUTOBL.DIN985 INOX M 4*	ECROU AUTOBLOCANT DIN985 INOX M 4

info@zipnasklade.ru
8(800)500-69-51

Nº	REF	DENOMINATION	DENOMINACIÓN	DENOMINATION
53	284950	KNOB PROTECTION	PROTECCION EMPUÑADURA	PROTECTION POIGNEE
54	288043	KNOB PROTECTION PIECE	PIEZA PROTECCION EMPUÑADURA	PIECE PROTECTION POIGNEE
55	304394	KNOB 1126.E DIN 6336.D	POMO 1126.E DIN 6336.D M8X47	POIGNEE 1126.E DIN 6336.D
56	149351	INOX A2 WASHER DIN 125 8,4	ARAN. DIN125 INOX A2 8,4	RONDELLE INOX A2 DIN 125 8,4
57	144774	INOX HEX SCREW DIN 933 M-5X10	TOR.EX.DIN933INOX A2-70 M 5X10	VIS HEX INOX DIN 933 M-5X10
58	149369	INOX A2 WASHER DIN 125 5,3	ARAN. DIN125 INOX A2 5,3	RONDELLE INOX A2 DIN 125 5,3
59	512954	THREADED PIN	VARILLA ROSCADA	BAGUETTE FILETEE
60	513028	SEPARATOR	SEPARADOR	SEPARATEUR
61	307371	REG.FILTER B72G-2GK-QT3-RMN	FILTRO/REGUL.B72G-2GK-QT3-RMN	FILTRE/REG.B72G-2GK-QT3-RMN
62	186593	MANOMETER 3-50/10/A	MANOMETRO 3-50/10/A	MANOMETRE 3-50/10/A
63	307389	STD AY-4224-50 BRACKET	SOPORTE STANDARD AY-4224-50	SUPPORT STD AY-4224-50
64	140525	CLAMP 2244-0	BRIDA UNEX 2244-0 *	BRIDE 2244-0
65	146258	BIC.HEX SCREW DIN933-4.8 M4X10	TOR.EX.DIN933-4.8 B.TRI.M 4X10	VIS HEX DIN933-4.8 BICR.M 4X10
66	149476	BICR.WASHER B DIN125-ST 4,3	ARAN.B DIN125-ST B.TRI. 4,3	RONDELLE B DIN125-ST BICR.4,3
67	150185	BICR.HEX.NUT DIN934-8 M4	TUER.EX.DIN934-8 B.TRI.M 4	ECROU HEX.DIN934-8 BICR.M4
68	186619	SLEEVE 1/4" REF. 1231013	ESPIGA ROSCADA 1/4"REF.1231013	MANCHON 1/4" REF. 1231013
69	186627	ELBOW CONNECTION RE.3109.10.13	CONEXION CODO REF.3109.10.13	CONNEXION COUDE REF.3109.10.13
70	359760	POLYURETANE HOSE D10X6.5 TU1065BU (1 METER)	TUBO POLIURET.D10X6.5 TU1065BU (1 METRO)	TUBE POLYURETANE D10X6.5 TU1065BU (1 METRE)
71	283093	SIDE PANEL BRACKET	SOPORTE TAPAS LATERALES	SUPPORT COUVERCLE LATERAL
72	334326	RACCORD IN REC D10 1/4	RACOR EN REC D10 1/4 31751013	RACCORD EN REC D10 1/4
73	359703	PRESSURE REGULATOR AR20-F02H	REGULADOR PRESION AR20-F02H-B	REGULATEUR DE PRESSION AR20-F02H
74	359695	EXTENSION 1/4 2525-1/4-27	ALARGADERA 1/4 2525-1/4-27	EXTENSION 1/4 2525-1/4-27
75	359679	STRAIGHT UNION 1/4 2500 1/4	UNION RECTA 1/4 2500 1/4	UNION DROITE 1/4 2500 1/4
76	359687	SILENCER AN203-02	SILENCIADOR AN203-02	SILENCIEUX AN203-02
77	359661	BASE PLATE SY5000-27-1F-Q	PLACA BASE SY5000-27-1F-Q	PLAQUE BASE SY5000-27-1F-Q
78	359596	E.V N/C DOUBLE 12DC SV2A00-6W3A	E.V N/C DOBLE 12DC SV2A00-6W3A	E.V N/C DOUBLE 12DC SV2A00-6W3A
79	359752	POLYURETANE HOSE D6X4 TU0604BU	TUBO POLIURETANO D6X4 TU0604BU	TUBE POLYURETANE D6X4 TU0604BU
80	359588	RACCORD IN REC D6 1/4 KQ2H06-02S	RACOR EN REC D6 1/4 KQ2H06-02S	RACCORD EN REC D6 1/4 KQ2H06-02S

info@zipnasklade.ru
8(800)500-69-51

Nº	REF	DENOMINATION	DENOMINACIÓN	DENOMINATION
81	157198	THERMOSTAT SHEATH LODGING	PASAMUROS TERMOSTATO *	LOGEMENT THERMOSTAT
82	454710	PRESSURE ADJUSTING SQUARE	ESCUADRA REGULADOR PRESION	EQUERRE REGLAGE PRESSION
83	359786	ELBOW RACCORD D6 1/4" 31290613	RACOR CODO EL D6 1/4" 31290613	RACCORD COUDE D6 1/4" 31290613
84	545855	REAR PROTECTION COVER	TAPA PROTECCION POSTERIOR	COUVERCLE PROTECTION ARRIERE
85	545814	REAR PROTECTION COVER	TAPA PROTECCION POSTERIOR	COUVERCLE PROTECTION ARRIERE
86	183400	PLATE SCREW ST-4, 20 P.F. C/AL.T25	TORNILLO CHAPA ST-4 (ESPECIAL)*	VIS PLAQUE ST-4, 20 P.F. C/AL.T25
87	456632	WIRETHROUGH CHANNEL	CANAL PASACABLES	CHANNEL PASSECABLES
88	276527	LOCK END-PIECE	TOPE CIERRE	ARRET FERMETURE
89	115758	WASHER 20X7X2	ARANDELA 20X7X2 INOX	RONDELLE 20X7X2
90	283085	SPRING FIXING-PIECE	FIJACION MUELLE	FIXATION RESSORT
91	177329	FINGER PROTECTION SPRING	MUELLE GUARDAMANOS	RESSORTS PROTECTION DOIGTS
92	283127	PANEL HINGE	CHARNELA TAPA	CHARNIERE COUVERCLE
93	150227	BICR HEX NUT DIN934-8 M6	TUER.EX.DIN934-8 B.TRI.M 6	ECROU HEX DIN934-8 BICR.M6
94	289116	SPRING FIXING	FIJACION MUELLE	FIXATION RESSORT

info@zipnasklade.ru
8(800)500-69-51

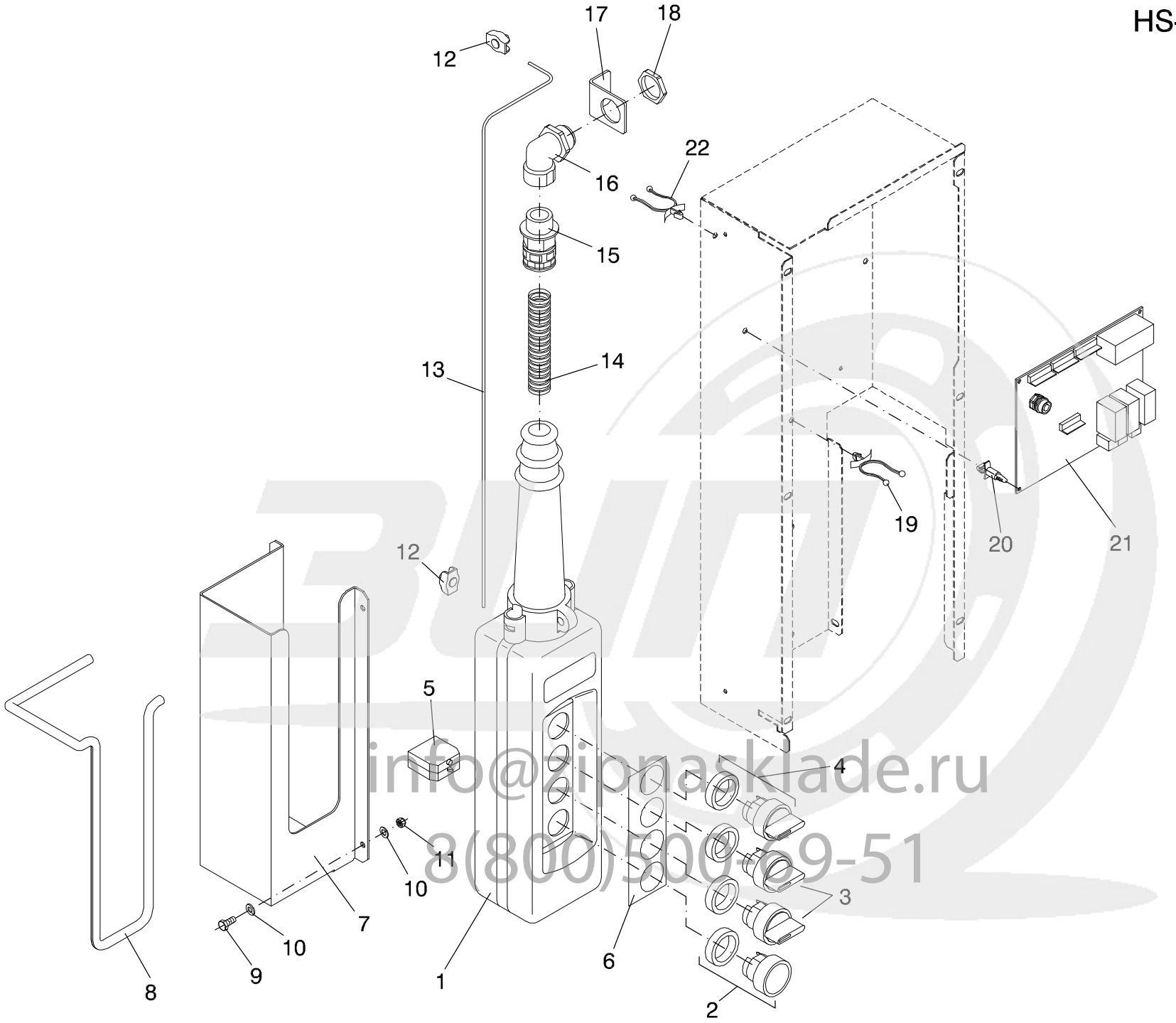

info@zipnasklade.ru
8(800)500-69-51

Nº	REF	DENOMINATION	DENOMINACIÓN	DENOMINATION
1	553156	PENDANT CONTROL ST. 4 BUTTONS	CAJA COLGANTE 4 BOTONES *	BOITE PENDANTE 4 BOUTONS
2	553131	BLACK RND.RAS.PUSH-BUTTON ZA2-	PULSADOR RAS.RED.NEGR.ZA2-BA2*	PULSATEUR RAS.RND.NOIR ZA2-BA2
3	553123	BLACK 3POS.SELECTOR ZA2-BD3	SELECTOR 3POS.EMB.NEG.ZA2-BD3*	SELECTEUR 3POS.GAR.NOI.ZA2-BD3
4	553115	BLACK 3POS.SELECTOR ZA2-BD5	SELECTOR 3POS.EMB.NEG.ZA2-BD5*	SELECTEUR 3POS.GAR.NOI.ZA2-BD5
5	153163	CONTACT 1*NA ZB2-BE101	CONTACTO 1*NA ZB2-BE101 *	CONTACT 1*NA ZB2-BE101
6	552083	CONTROL LABEL	ETIQUETA MANDO	ETIQUETTE COMMANDE
7	549014	CONTROL BRACKET	SOPORTE MANDO	SUPPORT COMMANDE
8	165472	ETHILENE-PROP. PROFILE (1 METER)	PERFIL ETILENO-PROP.REF.44117L (1 METRO)	PROFILE ETHILENE-PROP. (1 METRE)
9	146258	BIC.HEX SCREW DIN933-4.8 M4X10	TOR.EX.DIN933-4.8 B.TRI.M 4X10	VIS HEX DIN933-4.8 BICR.M 4X10
10	149476	BICR.WASHER B DIN125-ST 4,3	ARAN.B DIN125-ST B.TRI. 4,3	RONDELLE B DIN125-ST BICR.4,3
11	132043	SELF-LOCKING NUT DIN985-8 B.TRI.M 4	TUER.AUTOBL.DIN985-8 B.TRI.M 4	ECROU AUTOBLOCANT DIN985-8 B.TRI.M 4
12	112219	CABLE CLIP 3 MM	SUJETA CABLES VIMI DE 3 MM.	ATTACHE CABLE 3 MM
13	553149	STEEL WIRE D2 (1 METER)	CABLE ACERO D2 (1 METRO)	CABLE ACIER D2 (1 METRE)
14	510529	NYLOFIX HOSE DN12 REF.AGT-12G (1 METER)	TUBO NYLOFIX DN12 REF.AGT-12G (1 METRO)	TUBE NYLOFIX DN12 REF.AGT-12G (1 METRE)
15	510552	RACCORD M20 REF.MIR-12M20G	RACOR M20 REF.MIR-12M20G	RACCORD M20 REF.MIR-12M20G
16	553164	ELBOW 90º METALLIC 572054 M20	CODO 90º METALICO 572054 M20	COUDE 90º METALLIQUE 572054M20
17	552182	CTRL. HANGING CABLE END-PIECE	TOPE CABLE RETENCION MANDO	ARRET CABLE RETENTION COMMANDE
18	341354	NUT M 312005 M20	TUERCA M 312005 M20	ECROU M 312005 M20
19	352237	WASHER STL-750-16-01	ABRAZADERA STL-750-16-01	RONDELLE STL-750-16-01
20	332809	CIRCUIT BRACKET LCBS-4-7-01	SOPORTE CIRCUITO LCBS-4-7-01	SUPPORT CIRCUIT LCBS-4-7-01
21	549386	INTELI BOARD E/S-4/A (TILT)	PLACA INTELI E/S-4/A (MD)	PLAQUE INTELI E/S-4/A (TILT)
22	199893	CLAMP STL-450-3-01	ABRAZADERA STL-450-3-01	BRIDE STL-450-3-01

info@zipnasklade.ru
8(800)500-69-51

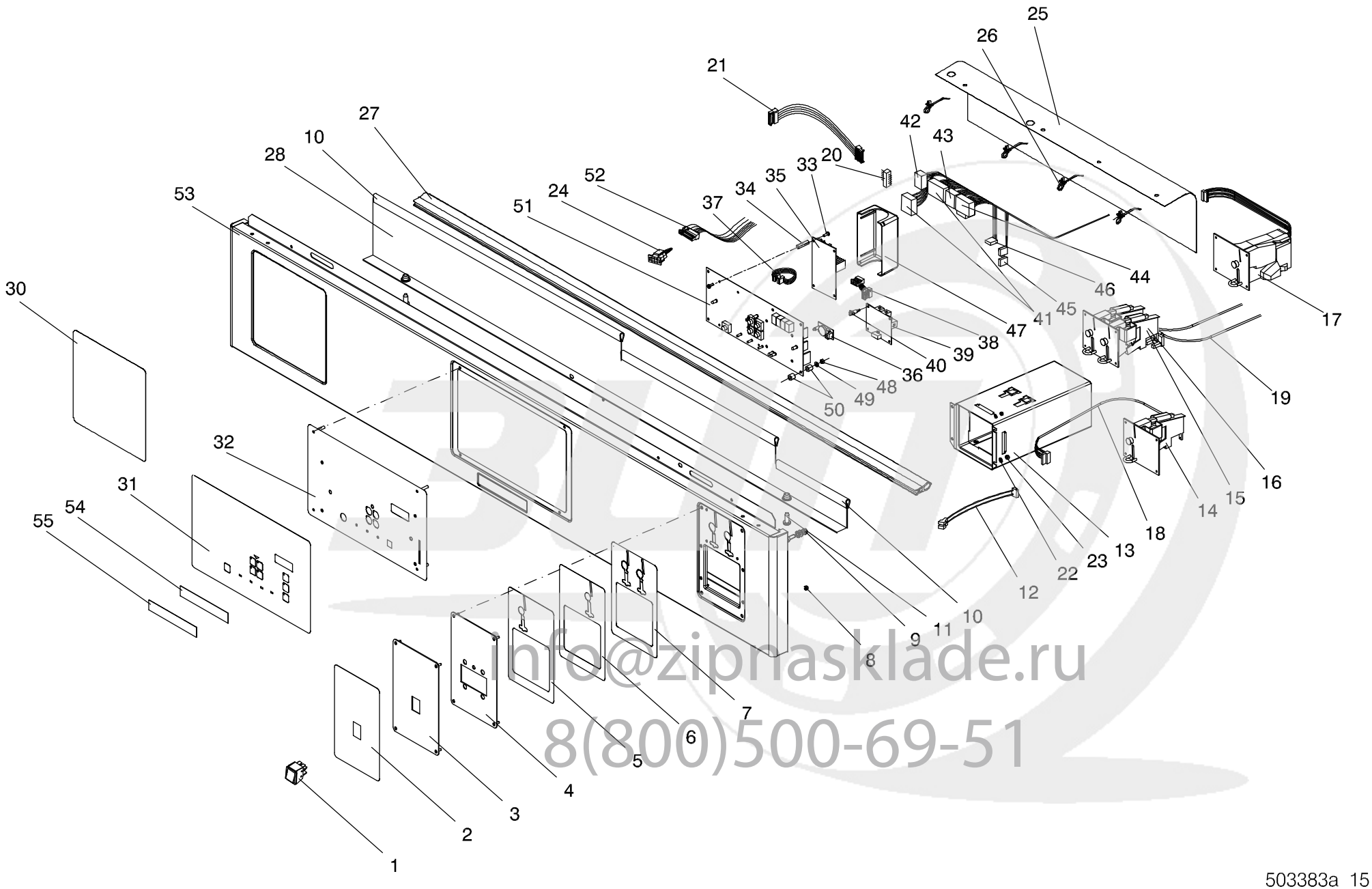

info@zipnasklade.ru
8(800)500-69-51

Nº	REF	DENOMINATION	DENOMINACIÓN	DENOMINATION
1	138339	PUSH-BUTTON C6061AL	PULSADOR C6061AL *	BOUTON-POUSSOIR C6061AL
2	429878	START-STOP LABEL CP	ETIQUETA MARCHA-PARO CP	ETIQUETTE MARCHE-ARRET CP
3	422998	SWITCH PLATE	PLACA INTERRUPTOR	PLAQUE INTERRUPTEUR
4	433532	CARD READER PLATE	PLACA LECTOR TARJETA	PLAQUE LECTEUR CARTE
5	592758	COINMETER LABEL CC-MS-25C	ETIQUETA MONEDERO CC-MS-25C	ETIQUETTE MONNAYEUR CC-MS-25C
6	592725	COINMETER LABEL CC-MU	ETIQUETA MONEDERO CC-MU	ETIQUETTE MONNAYEUR CC-MU
7	592717	COINMETER LABEL CC-MD USD	ETIQUETA MONEDERO CC-MD USD	ETIQUETTE MONNAYEUR CC-MD USD
8	129692	SELF-LOCKING NUT DIN985-8 B.TRI.M 3	TUER.AUTOBL.DIN985-8 B.TRI.M 3	ECROU AUTOBLOCANT DIN985-8 B.TRI.M 3
9	132043	SELF-LOCKING NUT DIN985-8 B.TRI.M 4	TUER.AUTOBL.DIN985-8 B.TRI.M 4	ECROU AUTOBLOCANT DIN985-8 B.TRI.M 4
10	192021	PROFILE	ENCUADERNADOR P (NEGRO) 2MT.	PROFILE
11	333294	SCREW T25 AR.18ESTR.M 6X15 INOX	TORNILLO ALOM.T25 M 6X15 INOX(ESPECIAL)*	VIS T25 AR.18ESTR.M 6X15 INOX
12	411678	COIN-METER PLUG	CONECTORA MONEDERO	CONNECTEUR MONNAYEUR
13	590570	COIN BOX SUPPORT	APOYO CAJON MONEDAS	APPUI BOITE MONNAIE
14	323642	COIN-METER F60.11 0,25USD	MONEDERO F60.11 0,25USD	MONNAYEUR F60.11 0,25USD
15	323659	COIN-METER F60.1 0,25/1,00USD	MONEDERO F60.1 0,25/1,00USD	MONNAYEUR F60.1 0,25/1,00USD
16	326892	COIN-METER F60.1 0,25/1,00CAD	MONEDERO F60.1 0,25/1,00CAD	MONNAYEUR F60.1 0,25/1,00CAD
17	411223	COIN-METER EMP 500 NOT EUROS	MONEDERO EMP 500 NO EUROS	MONNAYEUR EMP 500 NO EUROS
18	322461	COIN-METER 1 PLUG	CONECTORA 1 MONEDERO	CONNECTEUR 1 MONNAYEUR
19	322453	COIN-METER 2 PLUG	CONECTORA 2 MONEDERO	CONNECTEUR 2 MONNAYEURS
20	531715	TERMINAL ADAPTER COIN	TERMINAL ADAPTADOR MONEDERO	TERMINAL ADAPTATEUR MONNAYEUR
21	531202	ELEC. INST. ADAP. COIN	INST. ELEC. ADAP. MONEDERO	ELEC. INST. ADAP. COIN
22	149476	BICR.WASHER B DIN125-ST 4,3	ARAN.B DIN125-ST B.TRI. 4,3	RONDELLE B DIN125-ST BICR.4,3
23	132043	SELF-LOCKING NUT DIN985-8 B.TRI.M 4	TUER.AUTOBL.DIN985-8 B.TRI.M 4	ECROU AUTOBLOCANT DIN985-8 B.TRI.M 4
24	341990	EMERGENCY STOP PLUG	CONECTORA PARO EMERGENCIA	CONNECTEUR ARRET EMERGENCE
25	430454	MICRO BOARD PROTECTION	PROTECCION PLACA MICRO	PROTECTION PLAQUE MICRO
26	326132	CABLE TIE Ø35 NATURAL	ABRAZADERA Ø35 NATURAL	BRIDE Ø35 NATUREL
27	503177	CONTROL PANEL PROFILE	PERFIL PANEL DE MANDOS	PROFILE PANNEAU COMMANDES
28	531467	CONTROL PANEL PROFILE	PERFIL PANEL DE MANDOS	PROFILE TABLEAU DE COMMANDES

info@zipnasklade.ru
8(800)500-69-51

Nº	REF	DENOMINATION	DENOMINACIÓN	DENOMINATION
29	422972	CONTROL PANEL COVER	TAPA PANEL DE MANDOS	COUVERCLE PANNEAU DE COMMANDES
30	303693	SAFETY INSTR.LABEL EN	ETIQUETA INSTR. SEGURIDAD EN	ETIQUETTE INSTR.SECURITE EN
31	593517	COIN CONTROL EXTRA OP. WASHER KEYBOARD	TECLADO LAVADORA CC EXTRA OP.	CLAVIER LAVEUSE COIN CONTROL EXTRA OP.
32	594804	CONTROL PANEL PLATE	PLACA PANEL DE MANDOS	PLAQUE PANNEAU DE COMMANDES
33	322693	SCREW PT KN35X10 WN1412	TORNILLO PT KN35X10 WN1412 (ESPECIAL)	VIS PT KN35X10 WN1412
34	322685	SEPARATOR HEX.HS6-8	SEPARADOR EXAGONAL HS6-8	SEPARATEUR HEX. HS6-8
35	332718	POWER SOURCE MW PS-25-12	FUENTE ALIMENT.MW PS-25-12	FONT ALIMENT.MW PS-25-12
36	322677	CLOCK CIRCUIT	CIRCUITO RELOJ	CIRCUIT HORLOGE
37	530519	IDENTIFICATION PLUG	CONECTORA IDENTIFICACION	CONNECTEUR IDENTIFICATION
38	342451	INSTALLATION PLUG	CONECTORA INSTALACION	CONNECTEUR INSTALLATION
39	565895	COMMUNICATION BOARD COM-C * (WITH COM)	PLACA COMUNICACIONES COM-C * (PARA COM)	PLAQUE COMMUNICATIONS COM-C/609164 (AVEC COM)
40	332809	CIRCUIT BRACKET LCBS-4-7-01	SOPORTE CIRCUITO LCBS-4-7-01	SUPPORT CIRCUIT LCBS-4-7-01
41	530436	INST. ELEC. DESAGÜE Y CIERRE	INST. ELEC. DESAGÜE Y CIERRE	INST. ELEC. DESAGÜE Y CIERRE
42	530410	INST.ELEC.ENTRADA CORRIENTE	INST.ELEC.ENTRADA CORRIENTE	INST.ELEC.ENTRADA CORRIENTE
43	530444	INST. ELEC. AUXILIAR CIERRE	INST. ELEC. AUXILIAR CIERRE	INST. ELEC. AUXILIAR CIERRE
44	530428	INST. ELEC. INTERCONEXION	INST. ELEC. INTERCONEXION	INST. ELEC. INTERCONEXION
45	530402	INST. ELEC. NIVEL Y RS-485	INST. ELEC. NIVEL Y RS-485	INST. ELEC. NIVEL Y RS-485
46	530451	INST. ELEC. RELE CONVERTIDOR	INST. ELEC. RELE CONVERTIDOR	INST. ELEC. RELE CONVERTIDOR
47	326843	MICROPROCESSOR PLATE COVER	TAPA PLACA MICROPROCESADOR	COUVERCLE PLAQUE MICROPROSSEUR
48	150185	BICR.HEX.NUT DIN934-8 M4	TUER.EX.DIN934-8 B.TRI.M 4	ECROU HEX.DIN934-8 BICR.M4
49	149476	BICR.WASHER B DIN125-ST 4,3	ARAN.B DIN125-ST B.TRI. 4,3	RONDELLE B DIN125-ST BICR.4,3
50	322768	MICRO BOARD SEPARATOR	SEPARADOR PLACA MICRO	SEPARATEUR PLAQUE MICRO
51	594499	MICROP. BOARD H6023/40 LC/CC	PLACA MICROP.H6023/40 LC/CC	PLAQUE MICROP. H6023/40 LC/CC
52	530477	ELECTROVALVE ELEC.INST.	INST. ELEC. ELECTROVALVULAS	INST. ELEC. ELECTROVANNES
53	606467	CONTROL PANEL	PANEL DE MANDOS	PANNEAU CONTRÔLE
54	326082	PLATE CONTINENTAL GIRBAU	PLACA CONTINENTAL GIRBAU	PLAQUE CONTINENTAL GIRBAU
55	10078905	PLATE POSEIDON	PLACA POSEIDON	PLAQUE POSEIDON

info@zipnasklade.ru
8(800)500-69-51

Nº	REF	DENOMINATION	DENOMINACIÓN	DENOMINATION
		FROM MACHINE Nr: 1.500.275	A PARTIR DE LA MAQUINA No : 1.500.275	A PARTIR DE LA MACHINE NR: 1.500.275
29	422972	CONTROL PANEL COVER (CANCELLED)	TAPA PANEL DE MANDOS (ANULADO)	COUVERCLE PANNEAU DE COMMANDES (ANNULE)
53	10600666	CONTROL PANEL	PANEL DE MANDOS	PANNEAU DE COMMANDES

info@zipnasklade.ru
8(800)500-69-51