Mod.	From serial no. A partir máq. nº
HS-6017	2.125.209
EH040	1.473.548

Parts Handbook for Washers
Manual de Recambios para lavadoras
Notice Vues Eclatées pour laveuses

HS-6017
EH040

GIRBAU, S.A.
Crta de Manlleu, km. 1
08500 VIC (Barcelona) • SPAIN
Tel. 34 93 8861100
Fax 34 93 8860785
girbau@girbau.es
www.girbau.com

USA, CANADA:

CONTINENTAL GIRBAU Inc.
2500 State Road 44
WI 54904 Oshkosh • USA
Tel. 1(920) 231-8222
Fax 1(920) 231-4666
info@cont-girbau.com
www.cont-girbau.com

info@zipnasklade.ru
8(800)500-69-51

Parts Handbook
Manual de recambios
Vues Eclatées

HS-6017
EH040

Cod. 431726
ALT.10
Rev. 03/0817

NOTES TO USE PARTS LIST

Sheets no. 1,2,3,4,5,6,12 & 16:
Are common for all versions.

Sheets no. 7, 13:
Logi Control

Sheets no. 7, 14:
Coin Control

Sheets no. 8, 15:
Inteli Control

Sheet no. 9:
Logi Control & Coin Control with high temperature valve

Sheet no. 10:
Inteli Control with high temperature valve

Sheet no. 11:
Inteli Control with third water inlet

Sheet no. 17:
Electric heating

Sheet no. 18:
Steam heating

Sheet no. 19:
EH040 Coin Control

Sheet no. 20:
EH040 Coin Control with high temperature valve

ACLARACIONES PARA EL USO DEL MANUAL DE RECAMBIOS

Hojas nº 1,2,3,4,5,6,12 y 16:
Son comunes a todas las variantes.

Hojas nº 7 y 13:
Logi Control

Hojas nº 7 y 14:
Coin Control

Hojas nº 8 y 15:
Inteli Control

Hoja nº 9:
Logi Control y Coin Control con válvula alta temperatura

Hoja nº 10:
Inteli Control con válvula alta temperatura

Hoja nº 11:
Inteli Control con tercera entrada de agua

Hoja nº 17:
Calefacción eléctrica

Hoja nº 18:
Calefacción a vapor

Hoja nº 19:
EH040 Coin Control

Hoja nº 20:
EH040 Coin Control con válvula alta temperatura

NOTES UTILISATION VUES ECLATEES

Feuilles no.1,2,3,4,5,6,12 et 16:
Sont communes à toutes les versions.

Feuilles no. 7 et 13:
Logi Control

Feuilles no. 7 et 14:
Coin Control

Feuilles no. 8 et 15:
Inteli Control

Feuille no. 9 :
Logi Control et Coin Control avec vanne haute temperature

Feuille no. 10 :
Inteli Control avec vanne haute température

Feuille no. 11 :
Inteli Control avec troisième arrivée d'eau

Feuille no. 17 :
Chauffage électrique

Feuille no. 18:
Chauffage à vapeur

Feuille no. 19:
EH040 Coin Control

Feuille no. 20:
EH040 Coin Control avec vanne haute température

info@zipnasklade.ru
8(800)500-69-51

VERY IMPORTANT:
Before ordering parts be sure they have not been modified. Check it on modification sheet, after the corresponding sheet.

MUY IMPORTANTE:
Al pedir una pieza cerciorarse antes de que la misma no ha sido modificada. Si lo hubiese sido, estaría situada como hoja de modificaciones, detrás de la hoja correspondiente.

TRES IMPORTANT:
Avant de commander une pièce, s'assurer qu'elle n'a pas été modifiée. Le vérifier sur feuille de modifications, derrière la feuille correspondante.

HS-6017
Pag. 1

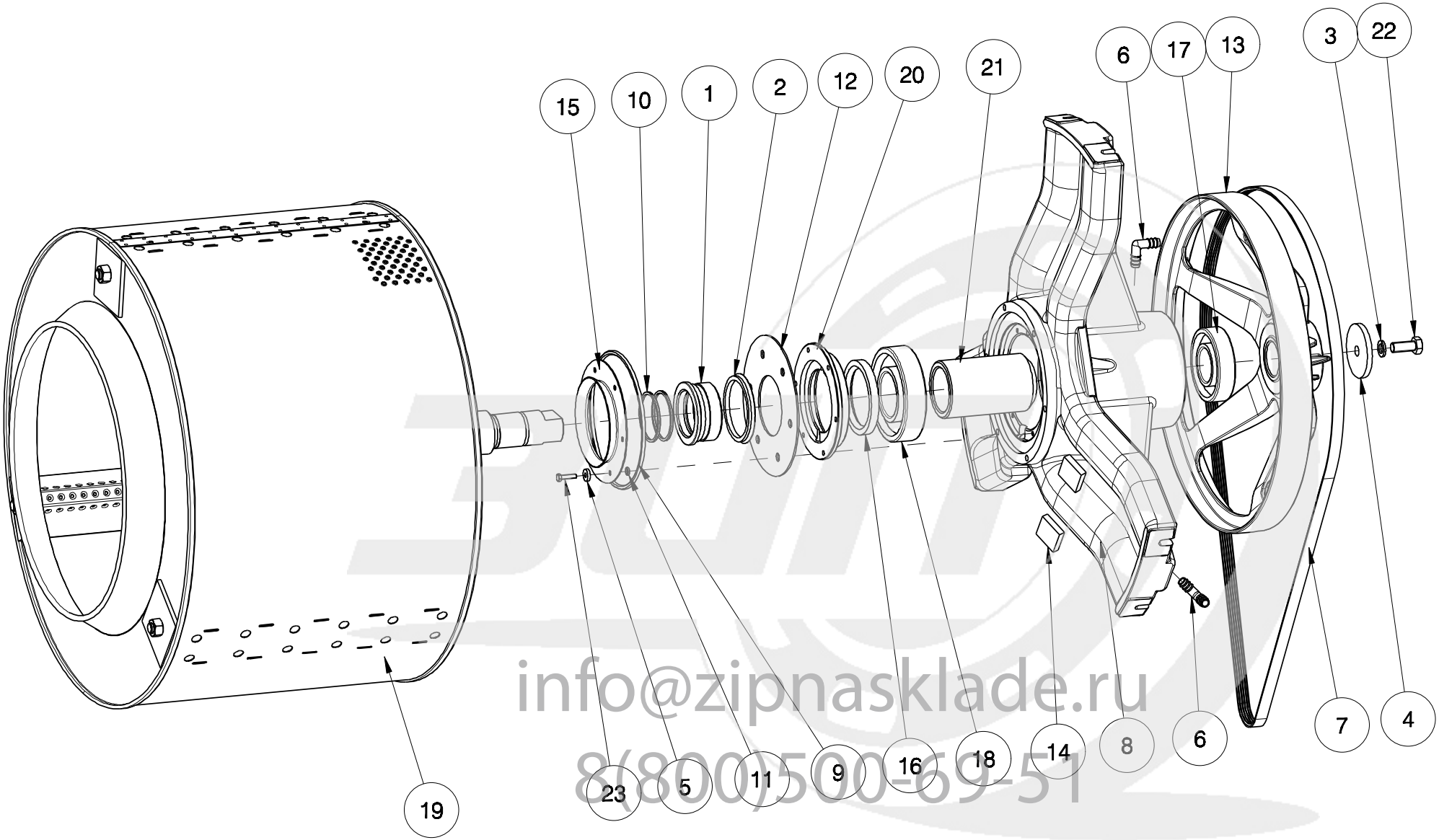

info@zipnasklade.ru
8(800)500-69-51

Nº	REF	DENOMINATION	DENOMINACIÓN	DENOMINATION
1	422154	SEAL RING	ANILLO RETENES	BAGUE RESERVES
2	343731	RING V-RING V-85A VITON	ANILLO V-RING V-85A VITON	BAGUE V-RING V-85A VUTON
3	149831	PAV A14 DIN127 GROWER WASHER	ARAN.GROWER A14 DIN127 PAVON.	RONDELLE GROWER A14 DIN127 PAV
4	212589	WASHER 80X15X8	ARANDELA 80X15X8 TRIVALEN.	RONDELLE 80X15X8
5	422220	WASHER D18XD6.5X4	ARANDELA 18X6.5X4 INOX	RONDELLE D18XD6.5X4
6	193904	HOSE ELBOW 3/8" RE. 46602	CODO MANGUERA 3/8" REF.46602	COUDE TUYAU 3/8" REF. 46602
7	338145	RIBBED BELT 6PK2062+-6	CORREA ESTR.6PK2062±6	COURROIE STRIE 6PK2062+-6
8	333484	BEARING BOX	ESTRELLA CAJA COJINETES	BOITE ROULEMENTS
9	333237	TORIC GASKET 193X205X6 NBR70SH	JUNTA TORICA 193X205X6 NBR70SH	JOINT TORIQUE 193X205X6 NBR70S
10	333195	TORIC GASKET 68X76X4 NBR70SH	JUNTA TORICA 68X76X4 NBR70SH	JOINT TORIQUE 68X76X4 NBR70SH
11	181321	TORIC GASKET 6X12X3	JUNTA TORICA 6X12X3	JOINT TORIQUE 6X12X3
12	422196	V.RING PLATE	PLATINA V-RING	PLATINE V-RING
13	342543	BASKET PULLEY	POLEA TAMBOR	POULIE TAMBOUR
14	431205	PRESSOSTAT HOSE PROTECTION	PROTECCION TUBO PRESOSTATO	PROTECTION TUBE PRESSOSTAT
15	422204	V-RING PROTECTION	PROTECCION V-RING	PROTECTION V-RING
16	333229	SEAL 85X110X12 BA NBR72SH	RETEN 85X110X12 BA NBR72SH	RESERVE 85X110X12 BA NBR72SH
17	333252	BEARING 6310-2Z	RODAMIENTO 6310-2Z	ROULEMENT 6310-2Z
18	333245	BEARING 6313-C-2HRS	RODAMIENTO 6313-C-2HRS	ROULEMENT 6313-C-2HRS
19	447078	DRUM	TAMBOR	TAMBOUR
20	430876	SEAL HOLDER COVER	TAPA PORTA-RETEN	COUVERCLE PORTE-RESERVE
21	422212	BEARING END-PIECE	TOPE COJINETES	ARRET ROULEMENTS
22	186312	HEX SCREW 8G DIN933 M14X35	TOR.EX.DIN933-8.8 B.TRI.M14X35	VIS HEX 8G DIN933 M14X35
23	144915	INOX HEX SCREW DIN933 M 6X25	TOR.EX.DIN933INOX A2-70 M 6X25	VIS HEX INOX DIN933 M 6X25

info@zipnasklade.ru
8(800)500-69-51

HS-6017
Pag. 2

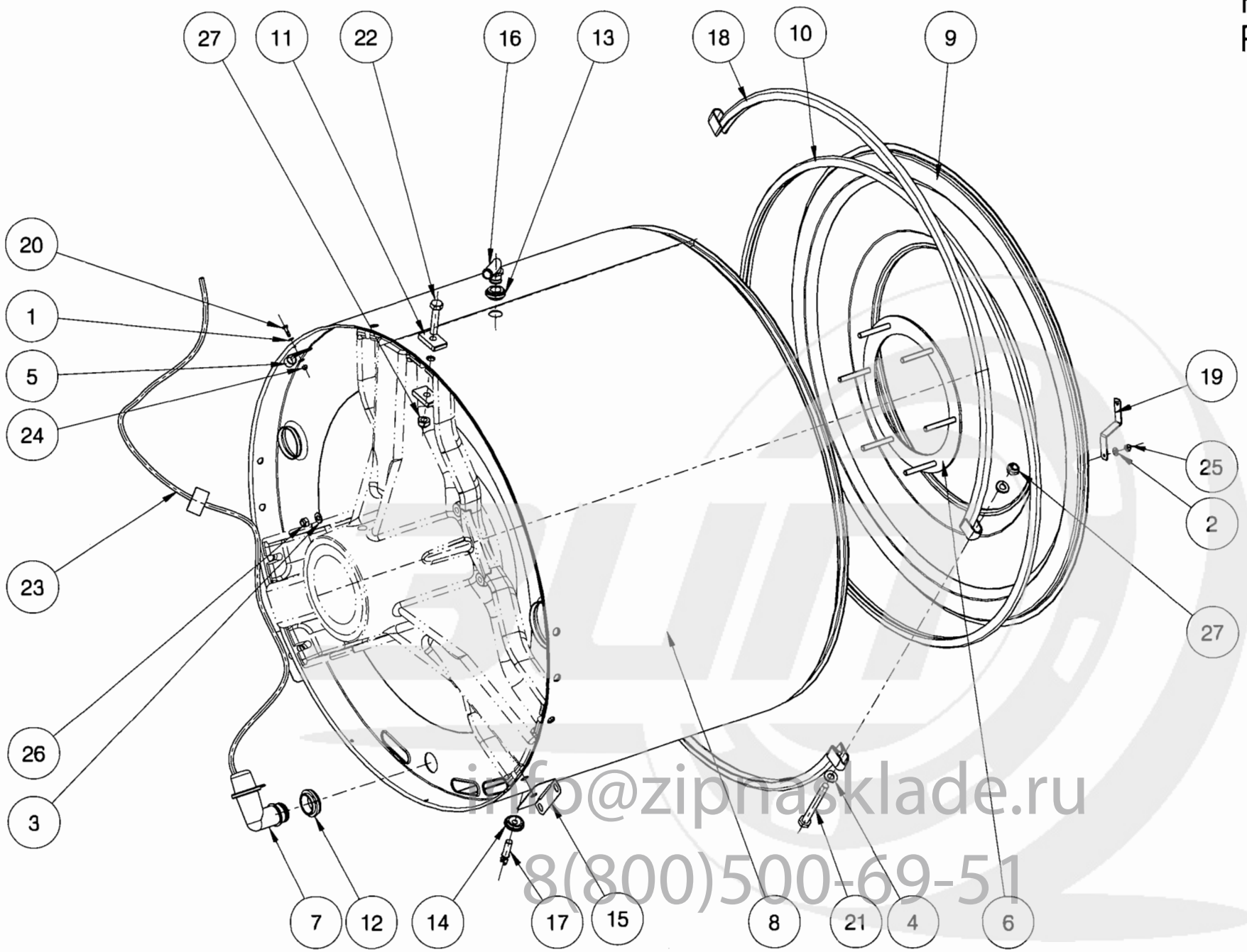

info@zipnasklade.ru
8(800)500-69-51

Nº	REF	DENOMINATION	DENOMINACIÓN	DENOMINATION
1	149476	BICR.WASHER B DIN125-ST 4,3	ARAN.B DIN125-ST B.TRI. 4,3	RONDELLE B DIN125-ST BICR.4,3
2	149526	BICR.WASHER B DIN125-ST 6,4	ARAN.B DIN125-ST B.TRI. 6,4	RONDELLE B DIN125-ST BICR.6,4
3	149518	BICR.WASHER B DIN125-ST 8,4	ARAN.B DIN125-ST B.TRI. 8,4	RONDELLE.B DIN125-ST BICR.8,4
4	149500	BICR.WASHER B DIN125-ST 10,5	ARAN.B DIN125-ST B.TRI.10,5	RONDELLE B DIN125-ST BICR.10,5
5	140418	CLAMP UNEX REF 1201	BRIDA UNEX 1201	BRIDE UNEX REF 1201
6	431551	OUTER DRUM PLATE SET	CONJUNTO PLATINA ENVOLVENTE	ENSEMBLE PLATINE CUVE
7	320382	PRESSURE TRANSMITT INTAKE BODY	CUERPO TOMA PRESOSTATO	CORPS PRISE PRESSOSTAT
8	422113	OUTER DRUM	ENVOLVENTE	CUVE
9	539866	OUTER DRUM FRONT PANEL	FRONTAL ENVOLVENTE	FRONTAL CUVE
10	333336	OUTER DRUM FRONT GASKET	JUNTA FRONTAL ENVOLVENTE	JOINT FRONTAL CUVE
11	422329	HANDRAIL 43X25X8	PASAMANO 43X25X8	PASSEMAIN 43X25X8
12	320036	PRESSURE T.BODY SHEATH-LODGING	PASAMUROS CUERPO PRESOSTATO	LOGEMENT CORPS PRESSOSTAT
13	338863	VAPOR OUTLET SHEATH-LODGING	PASAMUROS DESVAPORIZADOR	LOGEMENT SORTIE CONDENSATS
14	256149	SENSOR SHEATH LODGING	PASAMUROS SENSOR	LOGEMENT SENSEUR
15	341073	OUTER DRUM PIECE	POSICIONADOR ENVOLVENTE	PIECE CUVE
16	338871	VAPOR OUTLET RACCORD	RACOR DESVAPORIZADOR	RACCORD SORTIE CONDENSATS
17	193862	NTC RESISTANCE	RESISTENCIA NTC	RESISTANCE NTC
18	430256	OUTER DRUM FIXING SEMI-RING	SEMI-ARO FIJACION ENVOLVENTE	DEMI.BAGUE FIXATION CUVE
19	431536	LOCK INSTALLATION FIXING-PIECE	SUJECION INSTALACION CIERRE	FIXATION INST.FERMETURE
20	146266	BICR.HEX SCREW DIN933-8 M-4X15	TOR.EX.DIN933-4.8 B.TRI.M 4X15	VIS HEX BICR.DIN933-8.8 M-4X15
21	146563	BICR HEX SCREW DIN933 M-10X100	TOR.EX.DIN933-88 B.TRI.M10X100	VIS HEX DIN-933-8.8 BI.M10X100
22	186528	HEX SCREW DIN 933 8,8 M10x50 TRIVALENT	TORNILLO HEXAGONAL DIN 933 8,8 M10x50 TR	VIS HEXAGONALE DIN 933 8,8 M10x50 TRIVAL
23	427021	PRESSURE TRANSMITTER HOSE	TUBO TRANSMISOR PRESION	TUYAU PRESSOSTAT
24	132043	SELF-LOCKING NUT DIN985-8 B.TRI.M 4	TUER.AUTOBL.DIN985-8 B.TRI.M 4	ECROU AUTOBLOCANT DIN985-8 B.TRI.M 4
25	176834	SELF-LOCKING NUT DIN985-8 B.TRI.M6	TUER.AUTOBL.DIN985-8 B.TRI.M6	ECROU AUTOBLOCANT DIN985-8 B.TRI.M6
26	164285	SELF-LOCKING NUT DIN985-8 B.TRI.M8	TUER.AUTOBL.DIN985-8 B.TRI.M8	ECROU AUTOBLOCANT DIN985-8 B.TRI.M8
27	150649	SELF-LOCKING NUT DIN985-8 B.TRI.M10	TUER.AUTOB.DIN985-8 B.TRI.M10	ECROU AUTOBLOCANT DIN985-8 B.TRI.M10

info@zipnasklade.ru
8(800)500-69-51

HS-6017
Pag. 3

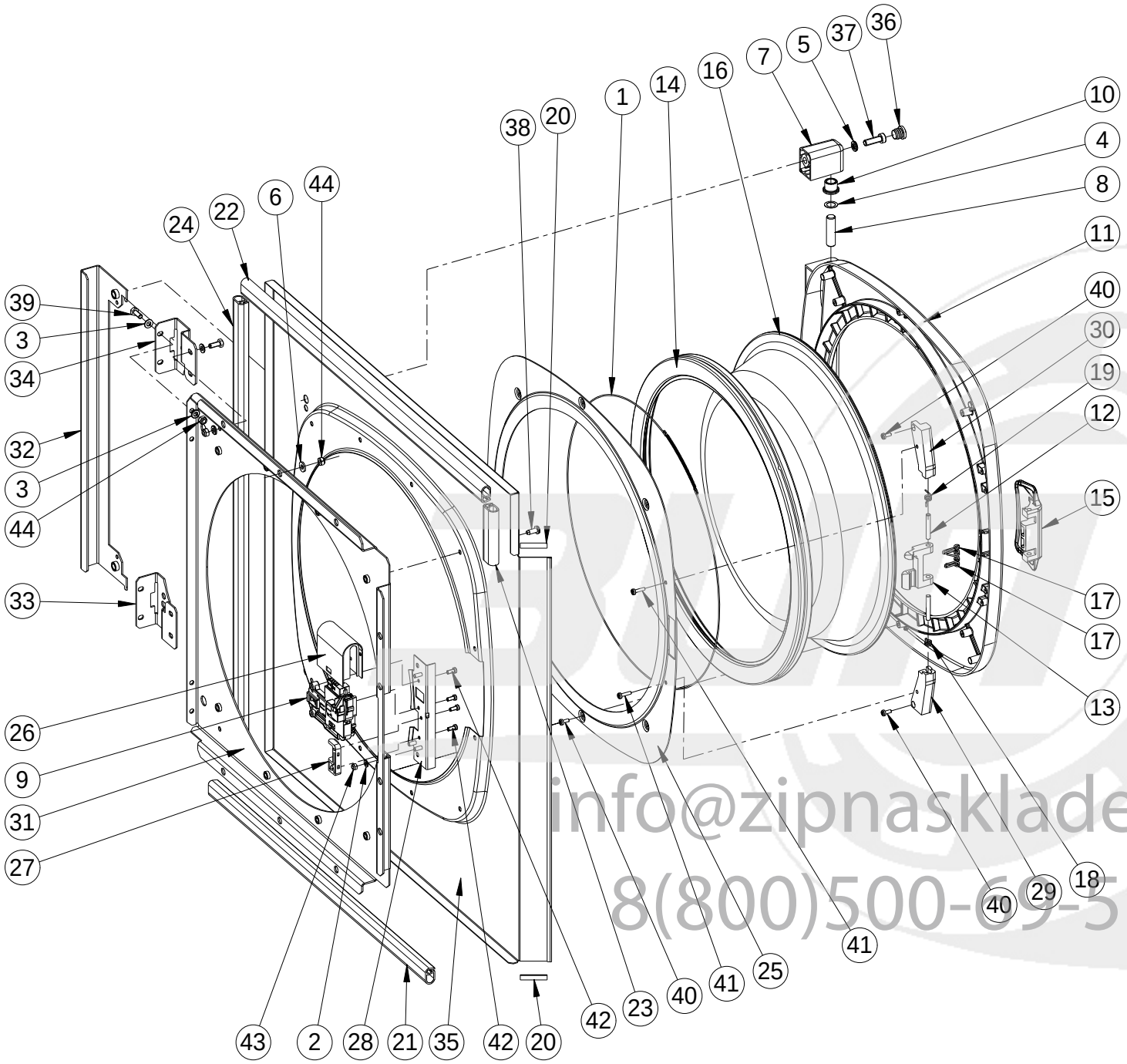

info@zipnasklade.ru
8(800)500-69-51

Nº	REF	DENOMINATION	DENOMINACIÓN	DENOMINATION
1	342907	WASHER D415X1,5 SPRING	ABRAZ.ALAMBRE D415X1,5 MUELLE	RONDELLE D415X1,5 RESSORT
2	149534	BICR.WASHER B DIN125-ST 5,3	ARAN.B DIN125-ST BICR. 5,3	RONDELLE B BICR.DIN125-ST 5,3
3	149526	BICR.WASHER B DIN125-ST 6,4	ARAN.B DIN125-ST B.TRI. 6,4	RONDELLE B DIN125-ST BICR.6,4
4	184200	ADJ. WASHER PS12X18X0,2	ARAN.AJUSTE PS12X18X0,2 DIN988	RONDELLE REGLAGE PS12X18X0,2
5	540039	NORD-LOCK WASHER NL 8 D.PROT.	ARAN.NORD-LOCK NL 8 D.PROT.	RONDELLE NORD-LOCK NL 8 D.PROT.
6	432872	WASHER 14X6.4X2	ARANDELA 14X6.4X2 INOX	RONDELLE 14X6.4X2
7	432054	HINGE	BISAGRA	CHARNIERE
8	261156	DOOR BOLT	BULON ESCOTILLA	BOULON HUBLOT
9	333302	LOCKING BITRON BP P/5 DL-S1	CIERRE BITRON BP P/5 DL-S1 *	FERMETURE BITRON BP P/5 DL-S1
10	128827	SELFOIL SLEEVE B11B12-17-15/22	COJ. SELFOIL B11B12-17-15/22-3	FRETTE SELFOIL B11B12-17-15/22
11	432039	DOOR BODY	CUERPO ESCOTILLA	CORPS HUBLOT
12	427088	HANDLE SHAFT	EJE MANETA	AXE POIGNEE
13	339614	LOCK HOOK	GANCHO CIERRE	CROCHET FERMETURE
14	563346	DOOR GASKET 65SHA	JUNTA ESCOTILLA 65SHA	JOINT HUBLOT 65SHA
	359828	DOOR GASKET 70SHA (SPARE PARTS ONLY)	JUNTA ESCOTILLA 70SHA (SOLO RECAMBIOS)	JOINT HUBLOT 70SHA (SEULEMENT PIECES DETACHEES)
15	339457	LOCK HANDLE	MANETA CIERRE	POIGNEE FERMETURE
16	333328	SPYHOLE	MIRILLA	VITRE
17	350462	HOOK SPRING	MUELLE GANCHO	RESSORT CROCHET
18	339978	HANDLE SPRING	MUELLE MANETA	RESSORT POIGNEE
19	339986	HANDLE SPRING	MUELLE MANETA	RESSORT POIGNEE
20	165472	ETHILENE-PROP. PROFILE	PERFIL ETILENO-PROP.REF.44117L	PROFILE ETHILENE-PROP.
21	338137	LOWER COVER AND PANEL PROFILE	PERFIL PANEL Y TAPA INFERIOR	PROF.PANNEAU ET COUVERCLE INF.
22	431361	FRONT COVER PROFILE	PERFIL TAPA FRONTAL	PROFILE COUVERCLE FRONTALE
23	432724	SHORT FRONT COVERT PROFILE	PERFIL TAPA FRONTAL CORTO	PROFILE COUVERC.FRONTALE COURT
24	333617	FRONT COVERS PROFILE	PERFIL TAPAS FRONTALES	PROFILE COUVERCLES FRONTALES
25	587774	GLASS-HOLDER	PORTA-MIRILLA	PORTE-VITRE
26	333070	LOCKING PROTECTION	PROTECCION CIERRE	PROTECTION FERMETURE
27	430843	FRONT COVER REINFORT	REFUERZO TAPA FRONTAL	RENFORT COUVERCLE FRONTALE

info@zipnasklade.ru
8(800)500-69-51

Nº	REF	DENOMINATION	DENOMINACIÓN	DENOMINATION
28	539940	LOCK BRACKET	SOPORTE CIERRE	SUPPORT FERMETURE
29	409086	HANDLE BRACKET	SOPORTE MANETA	SUPPORT HUBLOT
30	409094	HANDLE BRACKET	SOPORTE MANETA	SUPPORT POIGNEE
31	539858	DOOR BRACKET	SOPORTE PUERTA	SUPPORT PORTE
32	539908	HINGE NUT BRACKET	SOPORTE TUERCAS BISAGRAS	SUPPORT ECROU CHARNIÈRE
33	539882	LOWER DOOR BRACKET SUPPL..	SUPLEMENTO SOPORTE PUERTA INF.	SUPPL.SUPPORT PORTE INF.
34	539874	UPPER DOOR BRACKET SUPPL.	SUPLEMENTO SOPORTE PUERTA SUP.	SUPPL. SUPPORT PORTE SUP.
35	539916	FRONT COVER	TAPA FRONTAL	COUVERCLE FRONTALE
36	322974	PLUG KAPSTO GPN320GL18	TAPON KAPSTO GPN320GL18	BOUCHON KAPSTO GPN320GL18
37	316695	ALLEN SCREW DIN7984-8 M8X 25	TOR.ALLDIN7984-8.8B.TRI.M 8X25	VIS ALLEN DIN7984-8.8 B.M8X 25
38	333294	SCREW T25 AR.18ESTR.M 6X15 INOX	TORNILLO ALOM.T25 M 6X15 INOX(ESPECIA	VIS T25 AR.18ESTR.M 6X15 INOX
39	146233	BICR.HEX SCREW DIN933-8 M6X15	TOR.EX.DIN933-8.8 B.TRI.M 6X15	VIS HEX DIN933-8.8 BICR.M6X15
40	326116	SCREW 410TT85T 4X10 INOX	TORNILLO 410TT85T 4X10 INOX (ESPECIAL)	VIS 410TT85T 4X10 INOX
41	352724	SCREW 416TT85T 4X16 INOX	TORNILLO 416TT85T 4X16 INOX (ESPECIAL)	VIS 416TT85T 4X16 INOX
42	322990	SCREW 4510RFAT INOX 4.5X10	TORNILLO 4510RFAT INOX 4.5X10 (ESPECIAL)	VIS 4510RFAT INOX 4.5X10
43	176826	SELF-LOCKING NUT DIN985-8 B.TRI.M5	TUER.AUTOBL.DIN985-8 B.TRI.M5	ECROU AUTOBLOCANT DIN 985-8 B.TRI.M5
44	176834	SELF-LOCKING NUT DIN985-8 B.TRI.M6	TUER.AUTOBL.DIN985-8 B.TRI.M6	ECROU AUTOBLOCANT DIN985-8 B.TRI.M6
		WITHOUT ILLUSTRATION	SIN ILUSTRACION	SANS ILLUSTRATION
	431171	JOINT ADJUSTING RING	ARO AJUSTE JUNTA	BAGUE REGLAGE JOINT

info@zipnasklade.ru
8(800)500-69-51

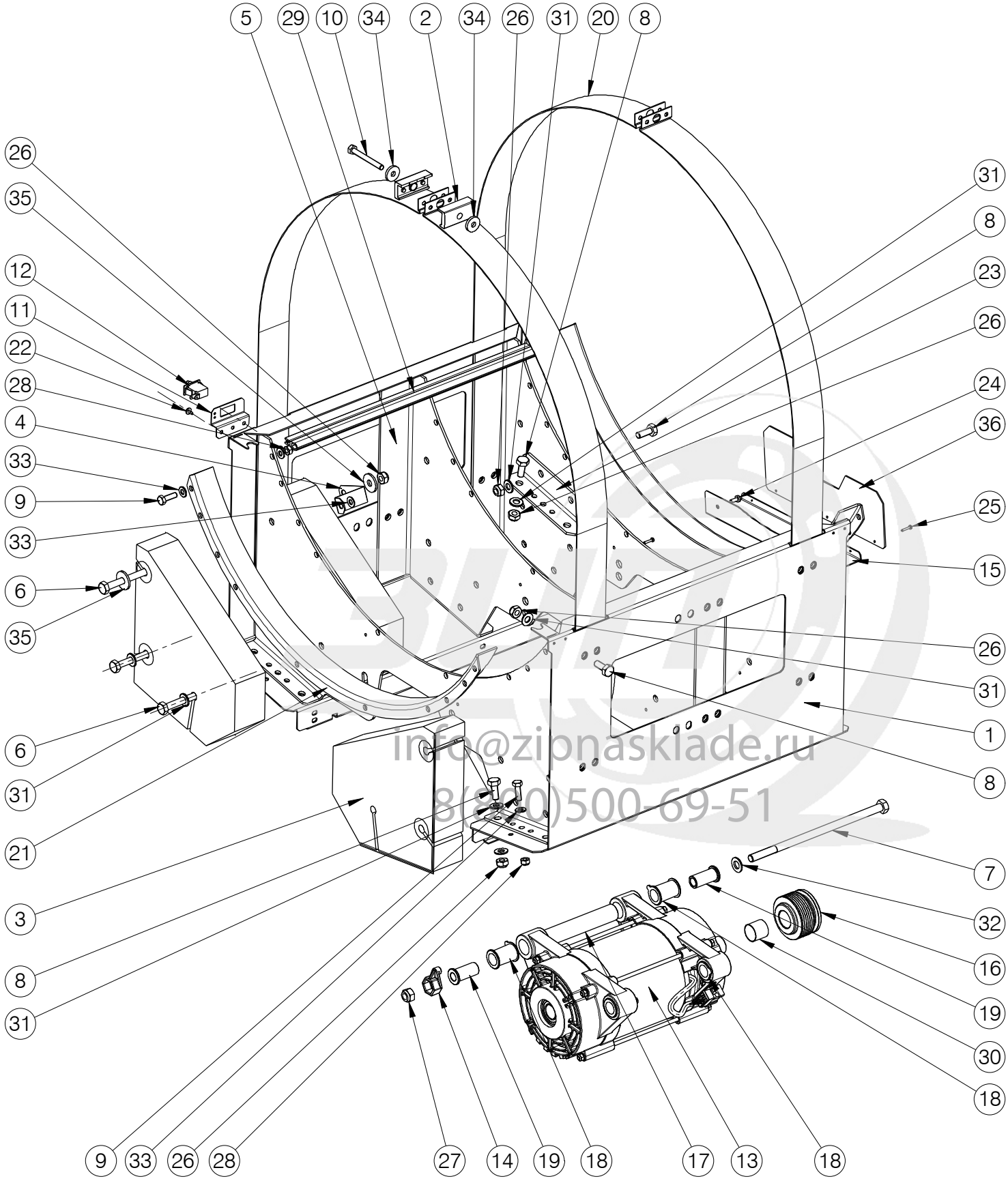

info@zipnasklade.ru
8(800)500-69-51

Nº	REF	DENOMINATION	DENOMINACIÓN	DENOMINATION
1	422949	CHASSIS SIDE PANEL	LATERAL CHASIS	LATERAL CHASSIS
2	338053	CLAMP TEIGHTENER	TENSOR ABRAZADERA	TENDEUR BRIDE
3	423079	COUNTERWEIGHT	CONTRAPESO	CONTREPOID
4	423350	PLATE CONTERWEIGHT JOINTING	UNION CONTRAPESO PLACA	UNION CONTREPOIDS PLAQUE
5	423335	CHASSIS PLATE	PLACA CHASIS	PLAQUE CHASSIS
6	191759	HEX SCREW 8G DIN931 M10X150	TOR.EX.DIN931-8.8B.TRI.M10X150	VIS HEX 8G DIN931 M10X150
7	338103	HEX SCREW DIN931-8.8 M12X260	TOR.EX.DIN931-8.8B.TRI.M12X260	VIS HEX DIN931-8.8 M12X260
8	147009	HEX SCREW 8G DIN 933 M-10X25	TOR.EX.DIN933-8.8 B.TRI.M10X25	VIS HEX. DIN 933 M-10X25 8G
9	192849	BIC.HEX SCREW DIN933-8 M-8X25	TOR.EX.DIN933-8.8 B.TRI.M 8X25	VIS HEX.DIN933-8,8 BICR.M-8X25
10	193391	HEX SCREW 8G DIN933 M- 8X 70	TOR.EX.DIN933-8.8 B.TRI.M 8X70	VIS HEX.8G DIN933 M- 8X 70
11	423129	MICROSWITCH BRACKET	SOPORTE MICRORRUPTOR	SUPPORT MICRORRUPTEUR
12	323048	MINISWITCH CHERRY E69-60C	MINIRRUPTOR CHERRY E69-60C	MINIRRUPTEUR CHERRY E69-60C
13	333385	MOTOR SET	CONJUNTO MOTOR MT90-150/4-H	ENSEMBLE MOTEUR
	501270	BEARING 6306-2Z/C3 (END PULLEY)	RODAMIENTO 6306-2Z/C3 (EXTREMO POLEA)	ROULEMENT 6306-2Z/C3 (FINAL POULIE)
	501577	BEARING 6205-2Z/C3 (OPPOSITE END PULLEY)	RODAMIENTO 6205-2Z/C3 (EXTREMO OPUESTO POLEA)	ROULEMENT 6205-2Z/C3 (FINAL OPPOSE POULIE)
14	338095	MOTOR NUT BRACKET	SOPORTE TUERCA MOTOR	SUPPORT ECROU MOTEUR
15	431163	MOTOR PROTECTION	PROTECCION MOTOR	PROTECTION MOTEUR
16	333401	MOTOR PULLEY MT 90-150/4-H	POLEA MOTOR MT 90-150/4-H	POULIE MOTEUR MT 90-150/4-H
17	423111	MOTOR SEPARATOR	SEPARADOR MOTOR	SEPARATEUR MOTEUR
18	432203	MOTOR SILENTBLOCK	SILENTBLOC MOTOR	SILENTBLOCK MOTEUR
19	423103	MOTOR SLEEVE	CASQUILLO MOTOR	FRETTE MOTEUR
20	422402	OUTER-DRUM CLAMP	ABRAZADERA ENVOLVENTE	BRIDE CUVE
21	422394	OUTER-DRUM SUPPORT PROFILE	PERFIL APOYO ENVOLVENTE	PROFILE APPUI CUVE
22	183400	PLATE SCREW ST-4, 20 P.F. C/AL.T25	TORNILLO CHAPA ST-4 (ESPECIAL)*	VIS PLAQUE ST-4, 20 P.F. C/AL.T25
23	422386	REAR SPRING POSITION	POSICIONADOR MUELLE POSTERIOR	POSITION RESSORT ARRIERE
24	343434	SCREW 512TTAET M5X12	TORNILLO 512TTAET M5X12 (ESPECIAL)	VIS 512TTAET M5X12
25	332627	SCREW REF. TT85 T M3 X16	TOR. REF. TT85 T M3 X16	VIS REF.TT85 T M3 X16

info@zipnasklade.ru
8(800)500-69-51

Nº	REF	DENOMINATION	DENOMINACIÓN	DENOMINATION
26	150649	SELF-LOCKING NUT DIN985-8 B.TRI.M10	TUER.AUTOB.DIN985-8 B.TRI.M10	ECROU AUTOBLOCANT DIN985-8 B.TRI.M10
27	150656	SELF-LOCKING NUT DIN985-8 B.TRI.M12	TUER.AUTOB.DIN985-8 B.TRI.M12	ECROU AUTOBLOCANT DIN985-8 B.TRI.M12
28	164285	SELF-LOCKING NUT DIN985-8 B.TRI.M8	TUER.AUTOBL.DIN985-8 B.TRI.M8	ECROU AUTOBLOCANT DIN985-8 B.TRI.M8
29	433136	SIDE PROFILE	PERFIL LATERAL	PROFILE LATERALE
30	341156	STAR TOLER.RING 0820-028-04	ANILLO TOLER.STAR 0820-028-04	BAGUE TOLER.STAR 0820-028-04
31	149500	BICR.WASHER B DIN125-ST 10,5	ARAN.B DIN125-ST B.TRI.10,5	RONDELLE B DIN125-ST BICR.10,5
32	149419	BICR.WASHER B DIN125-ST 13	ARAN.B DIN125-ST B.TRI.13	RONDELLE B DIN125-ST BICR.13
33	149518	BICR.WASHER B DIN125-ST 8,4	ARAN.B DIN125-ST B.TRI. 8,4	RONDELLE.B DIN125-ST BICR.8,4
34	261529	WASHER 25X8,5X4	ARANDELA 25X8.5X4 TRIVALEN.	RONDELLE 25X8,5X4
35	115428	WASHER 30X10,5X3	ARANDELA 30X10,5X3 TRIVALEN.	RONDELLE 30X10,5X3
36	432674	WIRE PROTECTION	PROTECCION CABLES	PROTECTION CABLES

info@zipnasklade.ru
8(800)500-69-51

HS-6017
Pag. 5

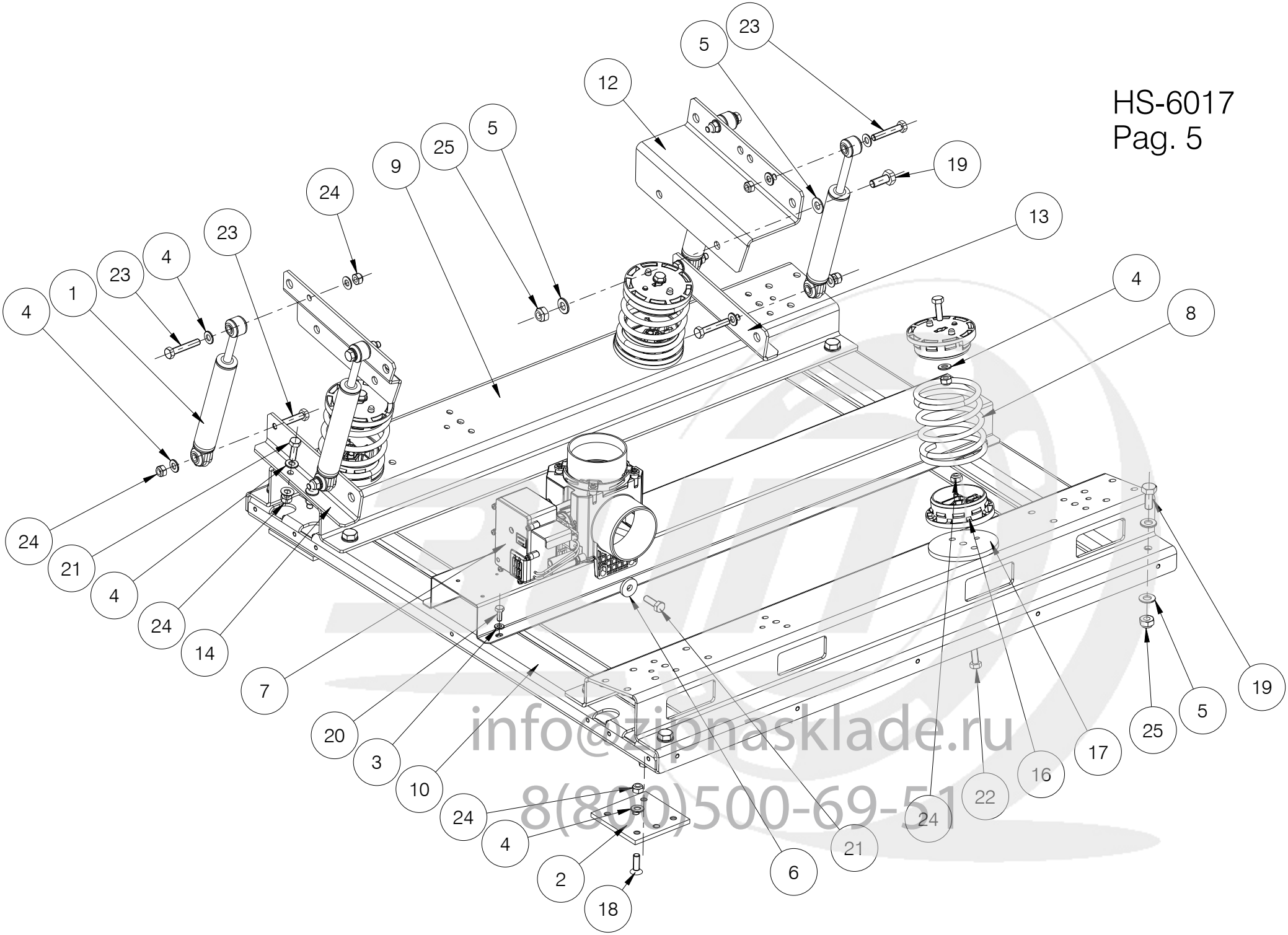

info@zipnasklade.ru
8(800)500-69-51

Nº	REF	DENOMINATION	DENOMINACIÓN	DENOMINATION
1	333476	SHOCK-ABSORBER SUSPA RD10 120N	AMORTIGUADOR SUSPA RD10 120N	AMORTISSEUR SUSPA RD10 120N
2	422360	SUPPORT BASE	APOYO BASE	BASE APPUI
3	149526	BICR.WASHER B DIN125-ST 6,4	ARAN.B DIN125-ST B.TRI. 6,4	RONDELLE B DIN125-ST BICR.6,4
4	149518	BICR.WASHER B DIN125-ST 8,4	ARAN.B DIN125-ST B.TRI. 8,4	RONDELLE.B DIN125-ST BICR.8,4
5	149500	BICR.WASHER B DIN125-ST 10,5	ARAN.B DIN125-ST B.TRI.10,5	RONDELLE B DIN125-ST BICR.10,5
6	261529	WASHER 25X8,5X4	ARANDELA 25X8.5X4 TRIVALEN.	RONDELLE 25X8,5X4
7	600544	DRAIN G3-O-90	DESAGÜE G3-O-90	VIDANGE G3-O-90
8	338079	SUSPENSION SPRING	MUELLE SUSPENSION	RESSORT SUSPENSION
9	422345	BASE LANE PROFILE	PERFIL LONGITUDINAL BASE	PROFILE LONGITUDINAL BASE
10	422337	BASE CROSS PROFILE	PERFIL TRANSVERSAL BASE	PROFILE TRANSVERSAL BASE
11	423087	SHOCK-ABSORBER PLATE	PLATINA AMORTIGUADORES	PLAQUE AMORTISSEURS
12	423285	TRAS. SHOCK-ABSORBER PLATE	PLATINA AMORTIGUADORES TRAS.	PLAQUE AMORTISSEURS TRAS.
13	423376	RIGHT SHOCK-ABSORBER BRACKET	SOPORTE AMORTIGUADOR DERECHO	SUPPORT AMORTISSEUR DROIT
14	423194	LEFT SHOCK-ABSORBER BRACKET	SOPORTE AMORTIGUADOR IZQUIERDO	SUPPORT AMORTISSEUR GAUCHE
15	423368	DRAIN BRACKET	SOPORTE DESAGÜE	SUPPORT VIDANGE
16	333351	RIGHT SPRING BRACKET	SOPORTE MUELLE A DERECHAS	SUPPORT RESORT À DROITES
17	432153	SPRING SUPPLEMENT	SUPLEMENTO MUELLE	SUPPLEMENT RESORT
18	175653	COUNTERSUNK SCREW DIN 7991 10,9 M8x25	TORNILLO AVELLANADO DIN 7991 10,9 M8x25	VIS FRAISEE DIN 7991 10,9 M8x25
19	147009	HEX SCREW 8G DIN 933 M-10X25	TOR.EX.DIN933-8.8 B.TRI.M10X25	VIS HEX. DIN 933 M-10X25 8G
20	146233	BICR.HEX SCREW DIN933-8 M6X15	TOR.EX.DIN933-8.8 B.TRI.M 6X15	VIS HEX DIN933-8.8 BICR.M6X15
21	192849	BIC.HEX SCREW DIN933-8 M-8X25	TOR.EX.DIN933-8.8 B.TRI.M 8X25	VIS HEX.DIN933-8,8 BICR.M-8X25
22	192831	BICR.HEX SCREW DIN 933-8 M8X30	TOR.EX.DIN933-8.8 B.TRI.M 8X30	VIS HEX DIN 933-8,8 BIC.M8X30
23	191726	HEX SCREW 8G DIN933 M 8X 45	TOR.EX.DIN933-8.8 B.TRI.M 8X45	VIS HEX.8G DIN933 M 8X 45
24	164285	SELF-LOCKING NUT DIN985-8 B.TRI.M8	TUER.AUTOBL.DIN985-8 B.TRI.M8	ECROU AUTOBLOCANT DIN985-8 B.TRI.M8
25	150649	SELF-LOCKING NUT DIN985-8 B.TRI.M10	TUER.AUTOB.DIN985-8 B.TRI.M10	ECROU AUTOBLOCANT DIN985-8 B.TRI.M10

info@zipnasklade.ru
8(800)500-69-51

HS-6017
Pag. 5

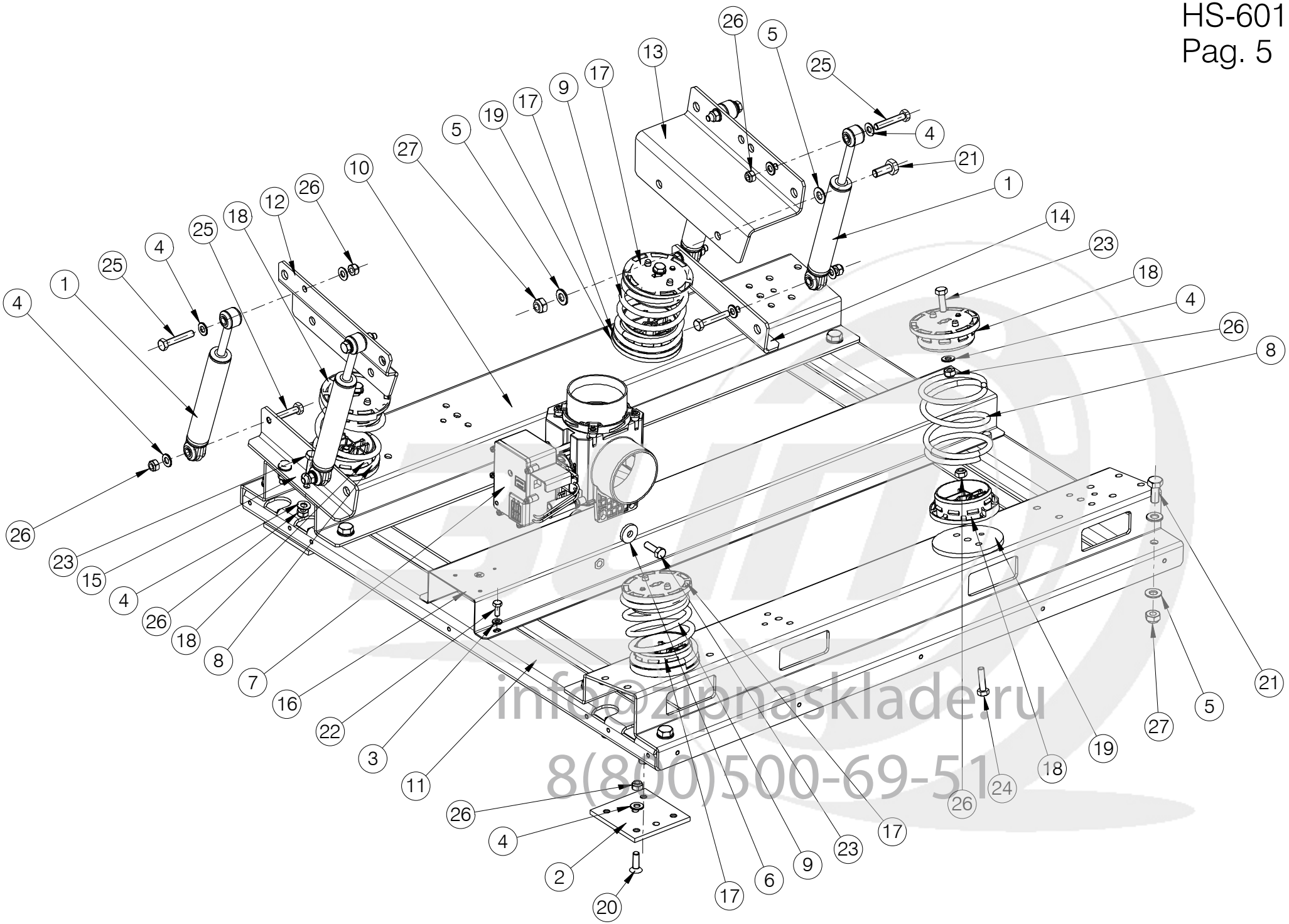

info@zipnasklade.ru
8(800)500-69-51

Nº	REF	DENOMINATION	DENOMINACIÓN	DENOMINATION
		FROM MACHINE Nr: 2.126.398 1.473.963	A PARTIR DE LA MAQUINA No : 2.126.398 1.473.963	A PARTIR DE LA MACHINE NR: 2.126.398 1.473.963
1	333476	SHOCK-ABSORBER SUSPA RD10 120N	AMORTIGUADOR SUSPA RD10 120N	AMORTISSEUR SUSPA RD10 120N
2	422360	SUPPORT BASE	APOYO BASE	BASE APPUI
3	149526	BICR.WASHER B DIN125-ST 6,4	ARAN.B DIN125-ST B.TRI. 6,4	RONDELLE B DIN125-ST BICR.6,4
4	149518	BICR.WASHER B DIN125-ST 8,4	ARAN.B DIN125-ST B.TRI. 8,4	RONDELLE.B DIN125-ST BICR.8,4
5	149500	BICR.WASHER B DIN125-ST 10,5	ARAN.B DIN125-ST B.TRI.10,5	RONDELLE B DIN125-ST BICR.10,5
6	261529	WASHER 25X8,5X4	ARANDELA 25X8.5X4 TRIVALEN.	RONDELLE 25X8,5X4
7	600544	DRAIN G3-O-90	DESAGÜE G3-O-90	VIDANGE G3-O-90
8	10162337	LEVOROTATION SPRING SUSPENSION	MUELLE SUSPENSION LEVOGIRO	RESSORT SUSPENSION LEVOGYRE
9	338079	SUSPENSION SPRING	MUELLE SUSPENSION	RESSORT SUSPENSION
10	422345	BASE LANE PROFILE	PERFIL LONGITUDINAL BASE	PROFILE LONGITUDINAL BASE
11	422337	BASE CROSS PROFILE	PERFIL TRANSVERSAL BASE	PROFILE TRANSVERSAL BASE
12	423087	SHOCK-ABSORBER PLATE	PLATINA AMORTIGUADORES	PLAQUE AMORTISSEURS
13	423285	TRAS. SHOCK-ABSORBER PLATE	PLATINA AMORTIGUADORES TRAS.	PLAQUE AMORTISSEURS TRAS.
14	423376	RIGHT SHOCK-ABSORBER BRACKET	SOPORTE AMORTIGUADOR DERECHO	SUPPORT AMORTISSEUR DROIT
15	423194	LEFT SHOCK-ABSORBER BRACKET	SOPORTE AMORTIGUADOR IZQUIERDO	SUPPORT AMORTISSEUR GAUCHE
16	423368	DRAIN BRACKET	SOPORTE DESAGÜE	SUPPORT VIDANGE
17	333351	RIGHT SPRING BRACKET	SOPORTE MUELLE A DERECHAS	SUPPORT RESORT À DROITES
18	10126498	LEVOROTATION SPRING SUPPORT	SOPORTE MUELLE LEVOGIRO	SUPPORT RESSORT LEVOGYRE
19	432153	SPRING SUPPLEMENT	SUPLEMENTO MUELLE	SUPPLEMENT RESORT
20	175653	COUNTERSUNK SCREW DIN 7991 10,9 M8x25	TORNILLO AVELLANADO DIN 7991 10,9 M8x25	VIS FRAISEE DIN 7991 10,9 M8x25
21	147009	HEX SCREW 8G DIN 933 M-10X25	TOR.EX.DIN933-8.8 B.TRI.M10X25	VIS HEX. DIN 933 M-10X25 8G
22	146233	BICR.HEX SCREW DIN933-8 M6X15	TOR.EX.DIN933-8.8 B.TRI.M 6X15	VIS HEX DIN933-8.8 BICR.M6X15
23	192849	BIC.HEX SCREW DIN933-8 M-8X25	TOR.EX.DIN933-8.8 B.TRI.M 8X25	VIS HEX.DIN933-8,8 BICR.M-8X25
24	192831	BICR.HEX SCREW DIN 933-8 M8X30	TOR.EX.DIN933-8.8 B.TRI.M 8X30	VIS HEX DIN 933-8,8 BIC.M8X30
25	191726	HEX SCREW 8G DIN933 M 8X 45	TOR.EX.DIN933-8.8 B.TRI.M 8X45	VIS HEX.8G DIN933 M 8X 45
26	164285	SELF-LOCKING NUT DIN985-8 B.TRI.M8	TUER.AUTOBL.DIN985-8 B.TRI.M8	ECROU AUTOBLOCANT DIN985-8 B.TRI.M8

info@zipnasklade.ru
8(800)500-69-51

Nº	REF	DENOMINATION	DENOMINACIÓN	DENOMINATION
27	150649	SELF-LOCKING NUT DIN985-8 B.TRI.M10	TUER.AUTOB.DIN985-8 B.TRI.M10	ECROU AUTOBLOCANT DIN985-8 B.TRI.M10

info@zipnasklade.ru
8(800)500-69-51

HS-6017
Pag. 6

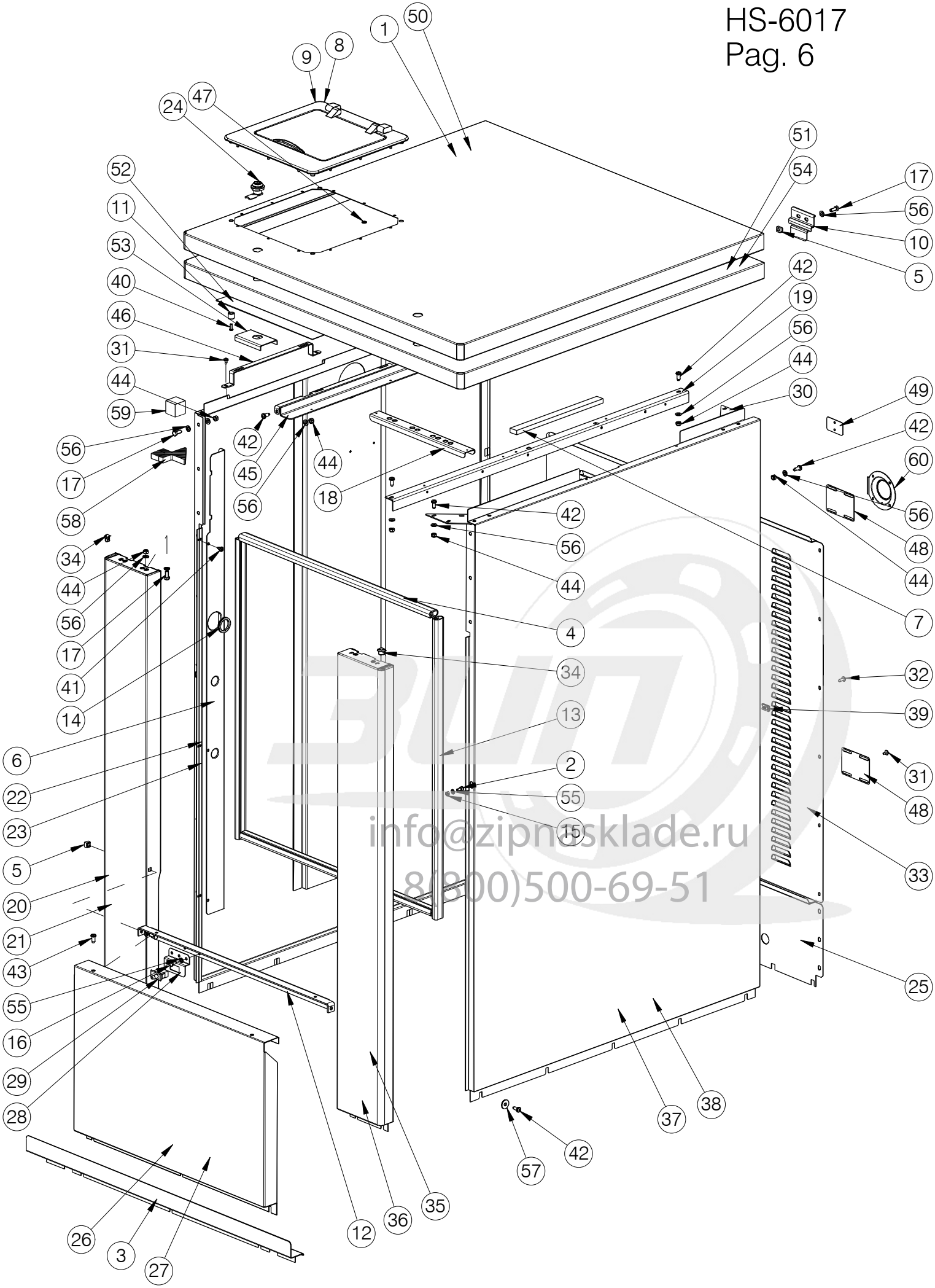

info@zipnosklade.ru
8(800)500-69-51

Nº	REF	DENOMINATION	DENOMINACIÓN	DENOMINATION
1	431619	UPPER COVER (INOX)	TAPA SUPERIOR (INOX)	COUVERCLE SUPERIEUR (INOX)
2	144261	ALLEN SCREW DIN 912 M-5X10	TOR.ALLDIN912-8.8 B.TRI.M 5X10	VIS ALLEN DIN 912 M-5X10
3	423343	SOCKET	ZOCALO	SOCLE
4	338137	LOWER COVER AND PANEL PROFILE	PERFIL PANEL Y TAPA INFERIOR	PROF.PANNEAU ET COUVERCLE INF.
5	165019	CAGED NUT M-6 0,5-1,5 R.310007-9	TUER.ENJ.M6 0,5-1,5 R.310007-9	*ECROU PRESIONER M-6 0,5-1,5 R.310007-9
6	432617	HARNES CONDUCTION	CONDUCCION CABLEADO	CONDUITE CABLAGE
7	439000	COVER ABSORBER PROFILE	PERFIL AMORTIGUADOR TAPA	PROFILE AMORTISSEUR COUVERCLE
8	517136	UPPER SOAP DISPENSER LID CC-USA (EH040)	TAPA DOSIFICADOR SUP.CC-USA (EH040)	COUVERCLE BAC A PRODUITS SUP. CC-USA (EH040)
9	517508	UPPER SOAP DISPENSER LID (HS-6017)	TAPA DOSIFICADOR SUP. (HS-6017)	COUVERCLE BAC A PRODUITS SUP. (HS-6017)
10	431593	TOP COVER HINGE	BISAGRA TAPA SUPERIOR	CHARNIERE COUVERCLE SUPERIEUR
11	444398	FRAME FIXATION SLEEVE	CASQUILLO FIJACION MARCO	FRETTE FIXATION CADRE
12	422568	FRONT COVER FIXING-PIECE	FIJACION TAPA FRONTAL	FIXATION COUVERCLE FRONTAL
13	333617	FRONT COVERS PROFILE	PERFIL TAPAS FRONTALES	PROFILE COUVERCLES FRONTALES
14	341438	CASTING MGS-1-01	MOLDURA MGS-1-01	MOULE MGS-1-01
15	150177	BICR HEX NUT DIN934-8 M5	TUER.EX.DIN934-8 B.TRI.M 5	ECROU HEX DIN934-8 BIC.M5
16	146274	BICR.HEX SCREW DIN933-8 M-5X10	TOR.EX.DIN933-8.8 B.TRI.M 5X10	VIS HEX.BICR.DIN933-8.8 M-5X10
17	146233	BICR.HEX SCREW DIN933-8 M6X15	TOR.EX.DIN933-8.8 B.TRI.M 6X15	VIS HEX DIN933-8.8 BICR.M6X15
18	423327	HOSE FIXING PROFILE	PERFIL FIJACION TUBOS	PROFILE FIXATION TUBES
19	422469	LANE ANGLE	ANGULO LONGITUDINAL	ANGLE LONGITUDINAL
20	422626	LEFT FRONT COVER (INOX)	TAPA FRONTAL IZQUIERDA (INOX)	COUVERCLE FRONTAL GAUCHE (INOX)
21	445338	LEFT FRONT COVER (PRE-COATED)	TAPA FRONTAL IZQUIERDA (PRE-COATED)	COUVERCLE FRONTAL GAUCHE (PRE-COATED)
22	422675	LEFT SIDE COVER (INOX)	TAPA LATERAL IZQUIERDA (INOX)	COUVERCLE LATERAL GAUCHE (INOX)
23	445668	LEFT SIDE COVER (PRE-COATED)	TAPA LATERAL IZQUIERDA (PRE-COATED)	COUVERCLE LATERAL GAUCHE (PRE-COATED)
24	196915	LOCK RE.20.00.02.05	CERRADURA REF.20.00.02.05 *	FERMETURE REF.20.00.02.05
	196923	LOCK KEY RE.10.41.213	LLAVE REF.10.41.213 COMB.T-205	CLE FERMETURE REF.10.41.213

info@zipnasklade.ru
8(800)500-69-51

Nº	REF	DENOMINATION	DENOMINACIÓN	DENOMINATION
25	422709	LOWER REAR COVER	TAPA POSTERIOR INFERIOR	COUVERCLE ARRIERE INFERIEUR
26	422634	LOWER FRONT COVER (INOX)	T. FRONTAL INFERIOR INOX (INOX)	COUVERCLE FRONTAL INFERIEUR (INOX)
27	528570	LOWER FRONT COVER (PRE-COATED)	T. FRONTAL INFERIOR PRECOATED (PRE-COATED)	COUVERCLE FRONTAL INFERIEUR (PRE-COATED)
28	423129	MICROSWITCH BRACKET	SOPORTE MICRORRUPTOR	SUPPORT MICRORRUPTEUR
29	323048	MINISWITCH CHERRY E69-60C	MINIRRUPTOR CHERRY E69-60C	MINIRRUPTEUR CHERRY E69-60C
30	406298	PANEL FIXING RENFORT	REFUERZO FIJACION TAPAS	REFORT FIXATION COUVERCLES
31	183400	PLATE SCREW ST-4, 20 P.F. C/AL.T25	TORNILLO CHAPA ST-4 (ESPECIAL)*	VIS PLAQUE ST-4, 20 P.F. C/AL.T25
32	149153	PLATE SCREW ST-4, 80 P.C. A/AL.T25	TORNILLO CHAPA ST-4 (ESPECIAL)*	VIS PLAQUE ST-4, 80 P.C. A/AL.T25
33	422691	REAR COVER	TAPA POSTERIOR	COUVERCLE ARRIERE
34	323717	END PIECE	CANTONERA	ARRET
35	422618	RIGHT FRONT COVER (INOX)	TAPA FRONTAL DERECHA (INOX)	COUVERCLE FRONTAL DROIT (INOX)
36	445320	RIGHT FRONT COVER (PRE-COATED)	TAPA FRONTAL DERECHA (PRE-COATED)	COUVERCLE FRONTAL DROIT (PRE-COATED)
37	422642	RIGHT SIDE COVER (INOX)	TAPA LATERAL DERECHA (INOX)	COUVERCLE LATERAL DROIT (INOX)
38	445643	RIGHT SIDE COVER (PRE-COATED)	TAPA LATERAL DERECHA (PRE-COATED)	COUVERCLE LATERAL DROIT (PRE-COATED)
39	135228	NUT NUL 506-2A REF. 213048-1	TUERCA SEG.NUL 506-2B 213048-1	ECROU NUL 506-2A REF. 213048-1
40	326660	SCREW 412RFX87T INOXA2 4X12	TORNILLO 412RFX87T INOXA2 4X12(ESPECIAL)	VIS 412RFX87T INOXA2 4X12
41	322750	SCREW FDS SF-M5X12 PKS TORX SPER	TORNILLO FDS SF-M5X12 (ESPECIAL)*	VIS FDS SF-M5X12 PKS TORX SPER
42	333625	SCREW T25 A18EST.M6X15 TRI.	TOR.ALOM.T25 A18EST.M6X15 TRI.(ESPECIAL)	VIS T25 A18EST.M6X15 TRI.
43	333294	SCREW T25 AR.18ESTR.M 6X15 INOX	TORNILLO ALOM.T25 M 6X15 INOX(ESPECIA	VIS T25 AR.18ESTR.M 6X15 INOX
44	176834	SELF-LOCKING NUT DIN985-8 B.TRI.M6	TUER.AUTOBL.DIN985-8 B.TRI.M6	ECROU AUTOBLOCANT DIN985-8 B.TRI.M6
45	431650	SAOP DISP.HOLDING-DOWN PROFILE	PERFIL ANCLAJE DOSIFICADOR	PROFILE SCELLEMENT BAC A PROD.
46	431742	SOAP DISPENSER BRACKET	SOPORTE DOSIFICADOR	SUPPORT BAC A PRODUITS
47	193540	MIKALOR QUICK FIXING 211038-8	SUJEC.RAPIDA MIKALOR 211038-8	FIXATION RAPIDE MIKALOR 211038-8
48	608034	STEAM INLET PROTECTION (FOR MACHINES STEAM HEATING)	PROTECCION ENTRADA VAPOR (PARA MODELOS CALEF. VAPOR)	PROTECTION ENTREE VAPEUR (POUR MACHINES CHAUF.VAPEUR)
49	607580	STEAM PROTECTION PLATE	CHAPA PROTECCION VAPOR	PLAQUE PROTECTION VAPEUR

info@zipnasklade.ru
8(800)500-69-51

Nº	REF	DENOMINATION	DENOMINACIÓN	DENOMINATION
		(FOR MACHINES STEAM HEATING)	(PARA MODELOS CALEF. VAPOR)	(POUR MACHINES CHAUF.VAPEUR)
50	445569	UPPER COVER (PRE-COATED)	TAPA SUPERIOR (PRE-COATED)	COUVERCLE SUPERIEUR (PRE-COATED)
51	10333490	TOP COVER (WITHOUT SOAP DISPENSER) (INOX)	TAPA SUPERIOR (SIN DOSIFICADOR) (INOX)	PANNEAU SUPERIEUR (NAS BAC A PRODUITS) (INOX)
52	590539	TOP COVER BLIND PROTECTOR	PROTECTOR TAPA SUPERIOR CIEGA*	AVEUGLE SUPERIEUR PROTECTEUR COUVERCLE
53	242115	UPPER COVER RENFORT	REFUERZO TAPA SUPERIOR	REFORT COUVERCLE SUPERIEUR
54	609719	UPPER COVER SET (WITHOUT SOAP DISPENSER) (PRE-COATED)	CONJUNTO TAPA SUPERIOR (SIN DOSIFICADOR) (PRE-COATED)	ENSEMBLE COUVERCLE SUPERIEUR (NAS BAC A PRODUITS) (PRE-COATED)
55	149534	BICR.WASHER B DIN125-ST 5,3	ARAN.B DIN125-ST BICR. 5,3	RONDELLE B BICR.DIN125-ST 5,3
56	149526	BICR.WASHER B DIN125-ST 6,4	ARAN.B DIN125-ST B.TRI. 6,4	RONDELLE B DIN125-ST BICR.6,4
57	153205	WASHER 20X7X2	ARANDELA 20X7X2 TRIVALEN.	RONDELLE 20X7X2
58	10011740	WATER DEFLECTOR	DEFLECTOR AGUA	DÉFLECTEUR EAU
59	10068203	WATER DEFLECTOR	DEFLECTOR AGUA	DÉFLECTEUR EAU
60	608265	STEAM INLET PROTECTION (FOR MACHINES STEAM HEATING)	PROTECCION ENTRADA VAPOR (PARA MODELOS CALEF. VAPOR)	PROTECTION ENTREE VAPEUR (POUR MACHINES CHAUF.VAPEUR)

info@zipnasklade.ru
8(800)500-69-51

HS-6017 LC/CC
Pag. 7

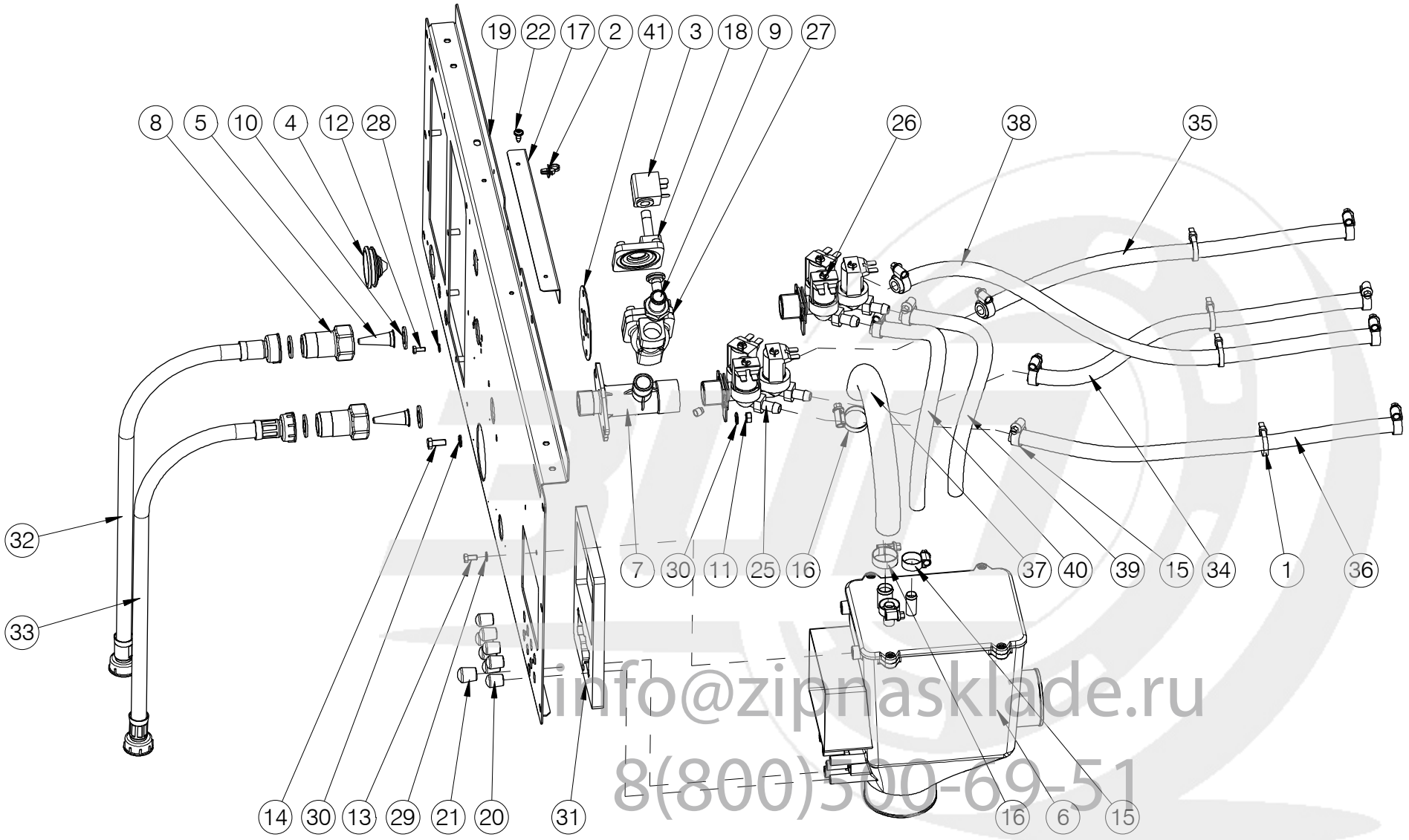

info@zipnasklade.ru
8(800)500-69-51

Nº	REF	DENOMINATION	DENOMINACIÓN	DENOMINATION
1	140525	CLAMP 2244-0	BRIDA UNEX 2244-0 *	BRIDE 2244-0
2	326132	CABLE TIE Ø35 NATURAL	ABRAZADERA Ø35 NATURAL	BRIDE Ø35 NATUREL
3	333716	COIL AB 5W 12V CC 042N0806	BOBINA AB 5W 12V CC 042N0806	BOBINE AB 5W 12V CC 042N0806
4	139683	CONE ECPC-6	CONO HIMEL ECPC-6	CONE ECPC-6
5	315614	CONICAL FILTER REF.4008-2-1	FILTRO CONICO REF.4008-2-1	FILTRE CONIQUE REF.4008-2-1
6	339689	DISTRIBUTOR	DISTRIBUIDOR	DISTRIBUTEUR
7	333682	ELECTROVALVE BRACKET	SOPORTE ELECTROVALVULAS	SUPPORT ELECTROVANNES
8	315317	FILTER BODY	CUERPO FILTRO	CORPS FILTRE
9	333690	FIG. 243 MI 1/2" BRASS	FIGURA 243 MI DE 1/2" LATON	FIG. 243 MI 1/2" LAITON
10	114348	GASKET D24XD13,5X2	JUNTA MIFLEX D24X13, 5X2 EPDM WRC 400105	JOINT D24XD13,5X2
11	150227	BICR HEX NUT DIN934-8 M6	TUER.EX.DIN934-8 B.TRI.M 6	ECROU HEX DIN934-8 BICR.M6
12	146258	BIC.HEX SCREW DIN933-4.8 M4X10	TOR.EX.DIN933-4.8 B.TRI.M 4X10	VIS HEX DIN933-4.8 BICR.M 4X10
13	146274	BICR.HEX SCREW DIN933-8 M-5X10	TOR.EX.DIN933-8.8 B.TRI.M 5X10	VIS HEX.BICR.DIN933-8.8 M-5X10
14	146233	BICR.HEX SCREW DIN933-8 M6X15	TOR.EX.DIN933-8.8 B.TRI.M 6X15	VIS HEX DIN933-8.8 BICR.M6X15
15	155150	HOSE CLIP ASFA-L W2 8-16	ABRAZADERA ASFA-L W2 8-16	COLLIER ASFA-L W2 8-16
16	156109	CLAMP 16-27	ABRAZADERA 16- 27 *	BRIDE 16-27
17	431767	INSTALLATION FIXING PROFILE	PERFIL FIJACION INSTALACION	PROFILE FIXATION INSTALLATION
18	341685	SPARE-PARTS KIT EV220A 12-14B	KIT REPUES.EV220A 12-14B *	KIT RECHANGES EV220A 12-14B
19	431635	REAR PANEL	PANEL POSTERIOR	PANNEAU POSTERIEUR
20	156679	CONICAL END-PIECE R-16 D10	TOPE CONICO REPRIMSA R-16 D10	BOUCHON CONIQUE R-16 D10
21	357624	CONICAL END-PECE R-16 D12	TOPE CONICO REPRIMSA R-16 D12	BOUCHON CONIQUE R-16 D12
22	322750	SCREW FDS SF-M5X12 PKS TORX SPER	TORNILLO FDS SF-M5X12 (ESPECIAL)*	VIS FDS SF-M5X12 PKS TORX SPER
23	307587	THREAD SEALANT WITHOUT ILLUSTRATION	SELLADOR DE ROSCAS SIN ILUSTRACION	ÉTANCHÉITÉ FILETÉE SANS ILLUSTRATION
24	358184	THREAD SEALING CORD WITHOUT ILLUSTRATION	HILO SELLADOR SIN ILUSTRACION	FIBRE D'ETANCHÉITÉ SANS ILLUSTRATION
25	511139	THREE TRACK ELECTROVALVE	ELECTROVALVULA TRES VIAS	ELECTROVANNE TROIS VOIES
	156265	REGULATOR 3 L/MIN (BLACK)	REGULADOR DE 3 L/MIN. (NEGRO)	REGULATEUR 3 L/MIN (NOIR)
	510933	REGULATOR 4 L/MIN.RED	REGULADOR DE 4L/MIN.ROJO CLARO	REGULATEUR 4 L/MIN ROUGE

info@zipnasklade.ru
8(800)500-69-51

Nº	REF	DENOMINATION	DENOMINACIÓN	DENOMINATION
	300194	YELLOW CASE 30053	ESTUCHE AMARILLO 30053	BOITE JAUNE 30053
	300202	INTEGRAL GUIDE-MEMBRANE 30696	MEMBRANA-GUIA INTEGRAL 30696 *	MEMBRANE-GUIDE INTEGRALE 30696
	332296	COIL 255043000000 12VCC	BOBINA 255043000000 12VCC	BOBINE 255043000000 12VCC
26	333674	TRIPLE ELECTROVALVE 369 180º	ELECTROV.TRIPLE 369 180º12VCC*	ELECTROVANNE TRIPLE 369 180º
	300194	YELLOW CASE 30053	ESTUCHE AMARILLO 30053	BOITE JAUNE 30053
	300202	INTEGRAL GUIDE-MEMBRANE 30696	MEMBRANA-GUIA INTEGRAL 30696 *	MEMBRANE-GUIDE INTEGRALE 30696
	332296	COIL 255043000000 12VCC	BOBINA 255043000000 12VCC	BOBINE 255043000000 12VCC
27	333708	VALVE EV220A G12 042U4022	CUERPO VAL.EV220A G12 042U4022	VANNE EV220A G12 042U4022
28	149476	BICR.WASHER B DIN125-ST 4,3	ARAN.B DIN125-ST B.TRI. 4,3	RONDELLE B DIN125-ST BICR.4,3
29	149534	BICR.WASHER B DIN125-ST 5,3	ARAN.B DIN125-ST BICR. 5,3	RONDELLE B BICR.DIN125-ST 5,3
30	149526	BICR.WASHER B DIN125-ST 6,4	ARAN.B DIN125-ST B.TRI. 6,4	RONDELLE B DIN125-ST BICR.6,4
31	10003960	WATER DEFLECTOR	DEFLECTOR AGUA	DÉFLECTEUR EAU
32	326587	WATER INLET AC DI12,5 L1,5M	TUBO ENTRADA AC DI12,5 L1,5M *	FLEXIBLE ENTRÉE AC DI12,5 L1,5
33	326579	WATER INLET AF DI12,5 L1,5M	TUBO ENTRADA AF DI12,5 L1,5M *	FLEXIBLE ENTRÉE AF DI12,5 L,5M
34	411363	WATER INLET HOSE	TUBO ENTRADA AGUA	TUBE ENTREE EAU
35	411389	WATER INLET HOSE	TUBO ENTRADA AGUA	TUBE ENTREE EAU
36	411397	WATER INLET HOSE	TUBO ENTRADA AGUA	TUBE ENTREE EAU
37	427211	WATER INLET HOSE	TUBO ENTRADA AGUA	TUBE ENTREE EAU
38	10918795	WATER INLET HOSE	TUBO ENTRADA AGUA	TUBE ENTREE EAU
39	10919231	WATER INLET TUBE	TUBO ENTRADA AGUA	TUBE ENTREE EAU
40	10919231	WATER INLET TUBE	TUBO ENTRADA AGUA	TUBE ENTREE EAU
41	606939	FIXING PLATE VALVE	CHAPA FIJACION VALVULA	PLATEAU FIXATION VANNE

info@zipnasklade.ru
8(800)500-69-51

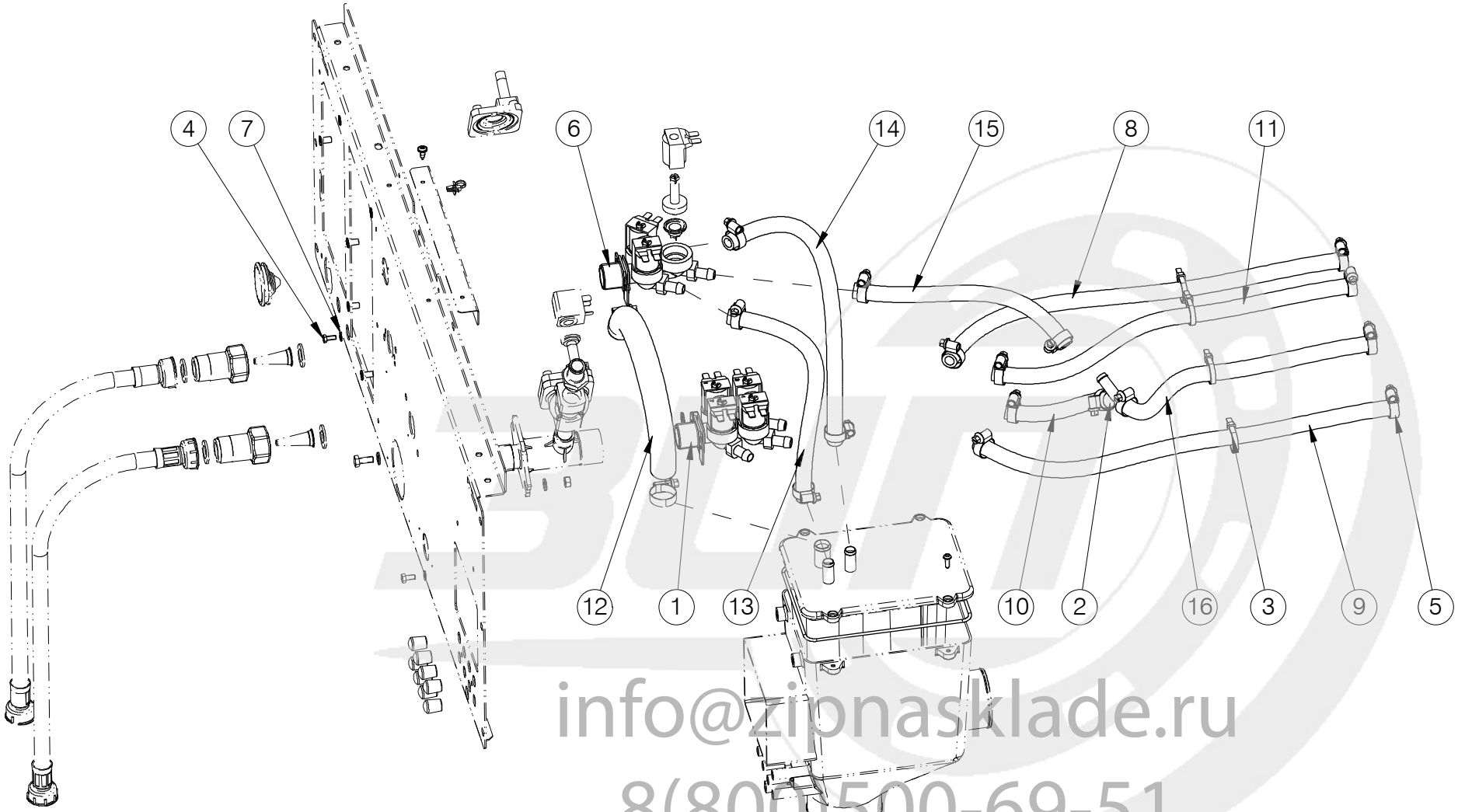

info@zipnasklade.ru
8(800)500-69-51

Nº	REF	DENOMINATION	DENOMINACIÓN	DENOMINATION
1	511212	4 TRACK ELECTROVALVE 389 180ºC	ELECTROV.CUADRUPLE 389 180º *	ELECTROVANNE 4 VOIES 389 180ºC
	156265	REGULATOR 3 L/MIN (BLACK)	REGULADOR DE 3 L/MIN. (NEGRO)	REGULATEUR 3 L/MIN (NOIR)
	510933	REGULATOR 4 L/MIN.RED	REGULADOR DE 4L/MIN.ROJO CLARO	REGULATEUR 4 L/MIN ROUGE
	300194	YELLOW CASE 30053	ESTUCHE AMARILLO 30053	BOITE JAUNE 30053
	300202	INTEGRAL GUIDE-MEMBRANE 30696	MEMBRANA-GUIA INTEGRAL 30696 *	MEMBRANE-GUIDE INTEGRALE 30696
	332296	COIL 255043000000 12VCC	BOBINA 255043000000 12VCC	BOBINE 255043000000 12VCC
2	152165	BRANCH	BIFURCACION	BIFURCATION
3	140525	CLAMP 2244-0	BRIDA UNEX 2244-0 *	BRIDE 2244-0
4	146258	BIC.HEX SCREW DIN933-4.8 M4X10	TOR.EX.DIN933-4.8 B.TRI.M 4X10	VIS HEX DIN933-4.8 BICR.M 4X10
5	155150	HOSE CLIP ASFA-L W2 8-16	ABRAZADERA ASFA-L W2 8-16	COLLIER ASFA-L W2 8-16
6	333674	TRIPLE ELECTROVALVE 369 180º	ELECTROV.TRIPLE 369 180º12VCC*	ELECTROVANNE TRIPLE 369 180º
	300194	YELLOW CASE 30053	ESTUCHE AMARILLO 30053	BOITE JAUNE 30053
	300202	INTEGRAL GUIDE-MEMBRANE 30696	MEMBRANA-GUIA INTEGRAL 30696 *	MEMBRANE-GUIDE INTEGRALE 30696
	332296	COIL 255043000000 12VCC	BOBINA 255043000000 12VCC	BOBINE 255043000000 12VCC
7	149476	BICR.WASHER B DIN125-ST 4,3	ARAN.B DIN125-ST B.TRI. 4,3	RONDELLE B DIN125-ST BICR.4,3
8	411389	WATER INLET HOSE	TUBO ENTRADA AGUA	TUBE ENTREE EAU
9	411397	WATER INLET HOSE	TUBO ENTRADA AGUA	TUBE ENTREE EAU
10	427187	WATER INLET HOSE	TUBO ENTRADA AGUA	TUBE ENTREE EAU
11	427195	WATER INLET HOSE	TUBO ENTRADA AGUA	TUBE ENTREE EAU
12	427211	WATER INLET HOSE	TUBO ENTRADA AGUA	TUBE ENTREE EAU
13	10919231	WATER INLET TUBE	TUBO ENTRADA AGUA	TUBE ENTREE EAU
14	10919231	WATER INLET TUBE	TUBO ENTRADA AGUA	TUBE ENTREE EAU
15	10919405	WATER INLET HOSE	TUBO ENTRADA AGUA	ENTREE EAU TUBE
16	10919470	WATER INLET HOSE	TUBO ENTRADA AGUA	TUBE ENTREE EAU

info@zipnasklade.ru
8(800)500-69-51

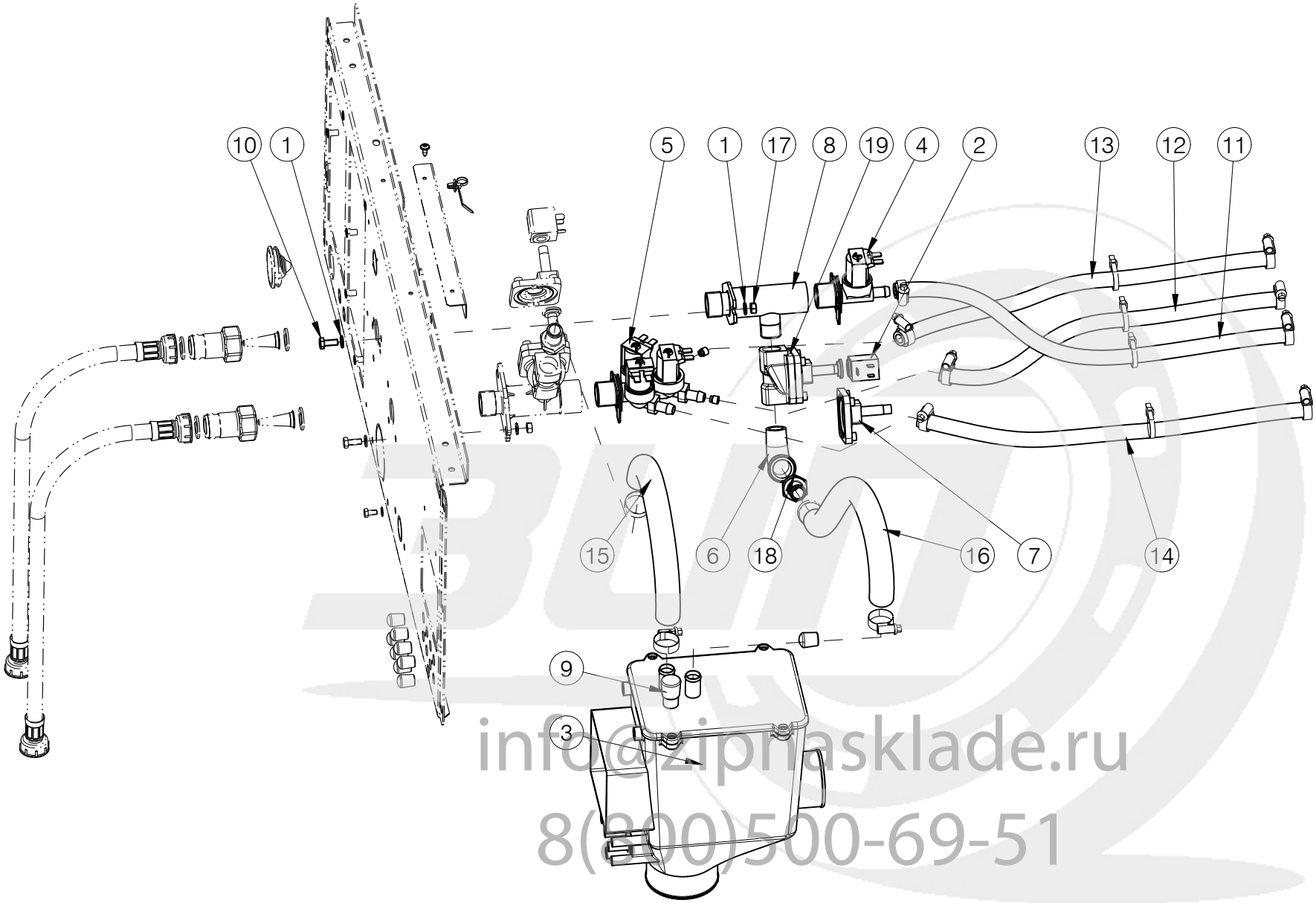

info@zipnasklade.ru
8(800)500-69-51

Nº	REF	DENOMINATION	DENOMINACIÓN	DENOMINATION
1	149526	BICR.WASHER B DIN125-ST 6,4	ARAN.B DIN125-ST B.TRI. 6,4	RONDELLE B DIN125-ST BICR.6,4
2	333716	COIL AB 5W 12V CC 042N0806	BOBINA AB 5W 12V CC 042N0806	BOBINE AB 5W 12V CC 042N0806
3	333658	DISTRIBUTOR	DISTRIBUIDOR	DISTRIBUTEUR
4	323329	SIMPLE ELECTROVALVE 329 180	ELECTROV.SIMPLE 329 180	ELECTROVANNE SIMPLE 329 180
	300194	YELLOW CASE 30053	ESTUCHE AMARILLO 30053	BOITE JAUNE 30053
	300202	INTEGRAL GUIDE-MEMBRANE 30696	MEMBRANA-GUIA INTEGRAL 30696 *	MEMBRANE-GUIDE INTEGRALE 30696
	332296	COIL 255043000000 12VCC	BOBINA 255043000000 12VCC	BOBINE 255043000000 12VCC
5	511139	THREE TRACK ELECTROVALVE	ELECTROVALVULA TRES VIAS	ELECTROVANNE TROIS VOIES
	156265	REGULATOR 3 L/MIN (BLACK)	REGULADOR DE 3 L/MIN. (NEGRO)	REGULATEUR 3 L/MIN (NOIR)
	510933	REGULATOR 4 L/MIN.RED	REGULADOR DE 4L/MIN.ROJO CLARO	REGULATEUR 4 L/MIN ROUGE
	300194	YELLOW CASE 30053	ESTUCHE AMARILLO 30053	BOITE JAUNE 30053
	300202	INTEGRAL GUIDE-MEMBRANE 30696	MEMBRANA-GUIA INTEGRAL 30696 *	MEMBRANE-GUIDE INTEGRALE 30696
	332296	COIL 255043000000 12VCC	BOBINA 255043000000 12VCC	BOBINE 255043000000 12VCC
6	129494	ELBOW FIG 92 1/2" GALV	FIGURA 92 DE 1/2"AMAT GALV.	COUDE FIG 92 1/2" GALV
7	341685	SPARE-PARTS KIT EV220A 12-14B	KIT REPUES.EV220A 12-14B *	KIT RECHANGES EV220A 12-14B
8	552133	ELECTROVALVE BRACKET	SOPORTE ELECTROVALVULAS	SUPPORT ELECTROVANNES
9	156687	CONICAL END-PIECE R-16 D16	TOPE CONICO REPRIMSA R-16 D16	ARRET CONIQUE R-16 D16
10	146233	BICR.HEX SCREW DIN933-8 M6X15	TOR.EX.DIN933-8.8 B.TRI.M 6X15	VIS HEX DIN933-8.8 BICR.M6X15
11	211771	WATER INLET HOSE	TUBO ENTRADA AGUA	TUBE ENTREE EAU
12	411363	WATER INLET HOSE	TUBO ENTRADA AGUA	TUBE ENTREE EAU
13	411389	WATER INLET HOSE	TUBO ENTRADA AGUA	TUBE ENTREE EAU
14	411397	WATER INLET HOSE	TUBO ENTRADA AGUA	TUBE ENTREE EAU
15	427211	WATER INLET HOSE	TUBO ENTRADA AGUA	TUBE ENTREE EAU
16	427229	WATER INLET HOSE	TUBO ENTRADA AGUA	TUBE ENTREE EAU
17	150227	BICR HEX NUT DIN934-8 M6	TUER.EX.DIN934-8 B.TRI.M 6	ECROU HEX DIN934-8 BICR.M6
18	333690	FIG. 243 MI 1/2" BRASS	FIGURA 243 MI DE 1/2" LATON	FIG. 243 MI 1/2" LAITON
19	333708	VALVE EV220A G12 042U4022	CUERPO VAL.EV220A G12 042U4022	VANNE EV220A G12 042U4022

info@zipnasklade.ru
8(800)500-69-51

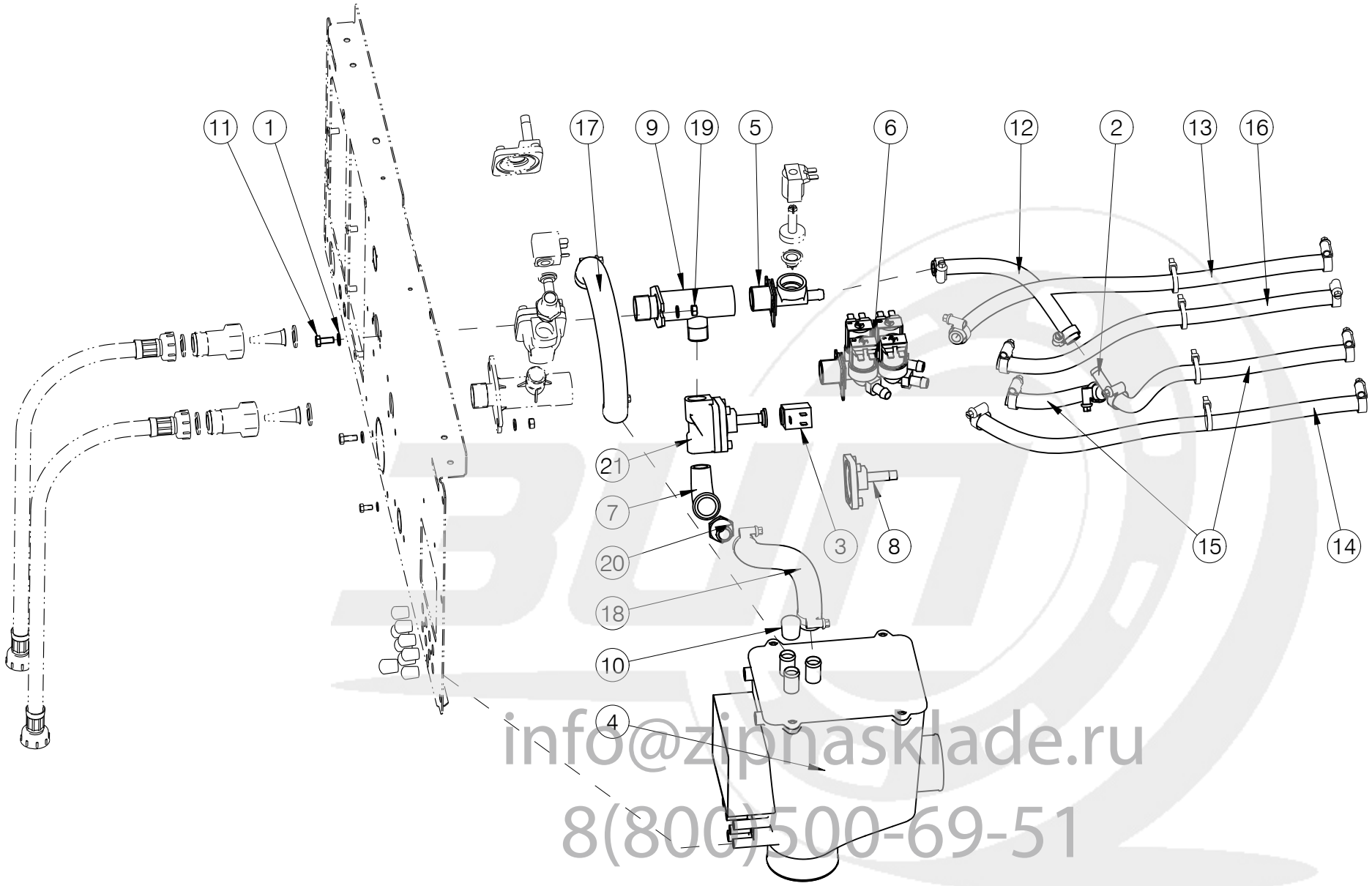

info@zipnasklade.ru
8(800)500-69-51

Nº	REF	DENOMINATION	DENOMINACIÓN	DENOMINATION
1	149526	BICR.WASHER B DIN125-ST 6,4	ARAN.B DIN125-ST B.TRI. 6,4	RONDELLE B DIN125-ST BICR.6,4
2	152165	BRANCH	BIFURCACION	BIFURCATION
3	333716	COIL AB 5W 12V CC 042N0806	BOBINA AB 5W 12V CC 042N0806	BOBINE AB 5W 12V CC 042N0806
4	333658	DISTRIBUTOR	DISTRIBUIDOR	DISTRIBUTEUR
5	323329	SIMPLE ELECTROVALVE 329 180	ELECTROV.SIMPLE 329 180	ELECTROVANNE SIMPLE 329 180
	156265	REGULATOR 3 L/MIN (BLACK)	REGULADOR DE 3 L/MIN. (NEGRO)	REGULATEUR 3 L/MIN (NOIR)
	300194	YELLOW CASE 30053	ESTUCHE AMARILLO 30053	BOITE JAUNE 30053
	300202	INTEGRAL GUIDE-MEMBRANE 30696	MEMBRANA-GUIA INTEGRAL 30696 *	MEMBRANE-GUIDE INTEGRALE 30696
	332296	COIL 255043000000 12VCC	BOBINA 255043000000 12VCC	BOBINE 255043000000 12VCC
6	511212	4 TRACK ELECTROVALVE 389 180ºC	ELECTROV.CUADRUPLE 389 180º *	ELECTROVANNE 4 VOIES 389 180ºC
	156265	REGULATOR 3 L/MIN (BLACK)	REGULADOR DE 3 L/MIN. (NEGRO)	REGULATEUR 3 L/MIN (NOIR)
	510933	REGULATOR 4 L/MIN.RED	REGULADOR DE 4L/MIN.ROJO CLARO	REGULATEUR 4 L/MIN ROUGE
	300194	YELLOW CASE 30053	ESTUCHE AMARILLO 30053	BOITE JAUNE 30053
	300202	INTEGRAL GUIDE-MEMBRANE 30696	MEMBRANA-GUIA INTEGRAL 30696 *	MEMBRANE-GUIDE INTEGRALE 30696
7	129494	ELBOW FIG 92 1/2" GALV	FIGURA 92 DE 1/2"AMAT GALV.	COUDE FIG 92 1/2" GALV
8	341685	SPARE-PARTS KIT EV220A 12-14B	KIT REPUES.EV220A 12-14B *	KIT RECHANGES EV220A 12-14B
9	552133	ELECTROVALVE BRACKET	SOPORTE ELECTROVALVULAS	SUPPORT ELECTROVANNES
10	156687	CONICAL END-PIECE R-16 D16	TOPE CONICO REPRIMSA R-16 D16	ARRET CONIQUE R-16 D16
11	146233	BICR.HEX SCREW DIN933-8 M6X15	TOR.EX.DIN933-8.8 B.TRI.M 6X15	VIS HEX DIN933-8.8 BICR.M6X15
12	410613	WATER INLET HOSE	TUBO ENTRADA AGUA	TUBE ENTRÉE EAU
13	411389	WATER INLET HOSE	TUBO ENTRADA AGUA	TUBE ENTREE EAU
14	411397	WATER INLET HOSE	TUBO ENTRADA AGUA	TUBE ENTREE EAU
15	427187	WATER INLET HOSE	TUBO ENTRADA AGUA	TUBE ENTREE EAU
16	427195	WATER INLET HOSE	TUBO ENTRADA AGUA	TUBE ENTREE EAU
17	427211	WATER INLET HOSE	TUBO ENTRADA AGUA	TUBE ENTREE EAU
18	427229	WATER INLET HOSE	TUBO ENTRADA AGUA	TUBE ENTREE EAU
19	150227	BICR HEX NUT DIN934-8 M6	TUER.EX.DIN934-8 B.TRI.M 6	ECROU HEX DIN934-8 BICR.M6
20	333690	FIG. 243 MI 1/2" BRASS	FIGURA 243 MI DE 1/2" LATON	FIG. 243 MI 1/2" LAITON

info@zipnasklade.ru
8(800)500-69-51

Nº	REF	DENOMINATION	DENOMINACIÓN	DENOMINATION
21	333708	VALVE EV220A G12 042U4022	CUERPO VAL.EV220A G12 042U4022	VANNE EV220A G12 042U4022

info@zipnasklade.ru
8(800)500-69-51

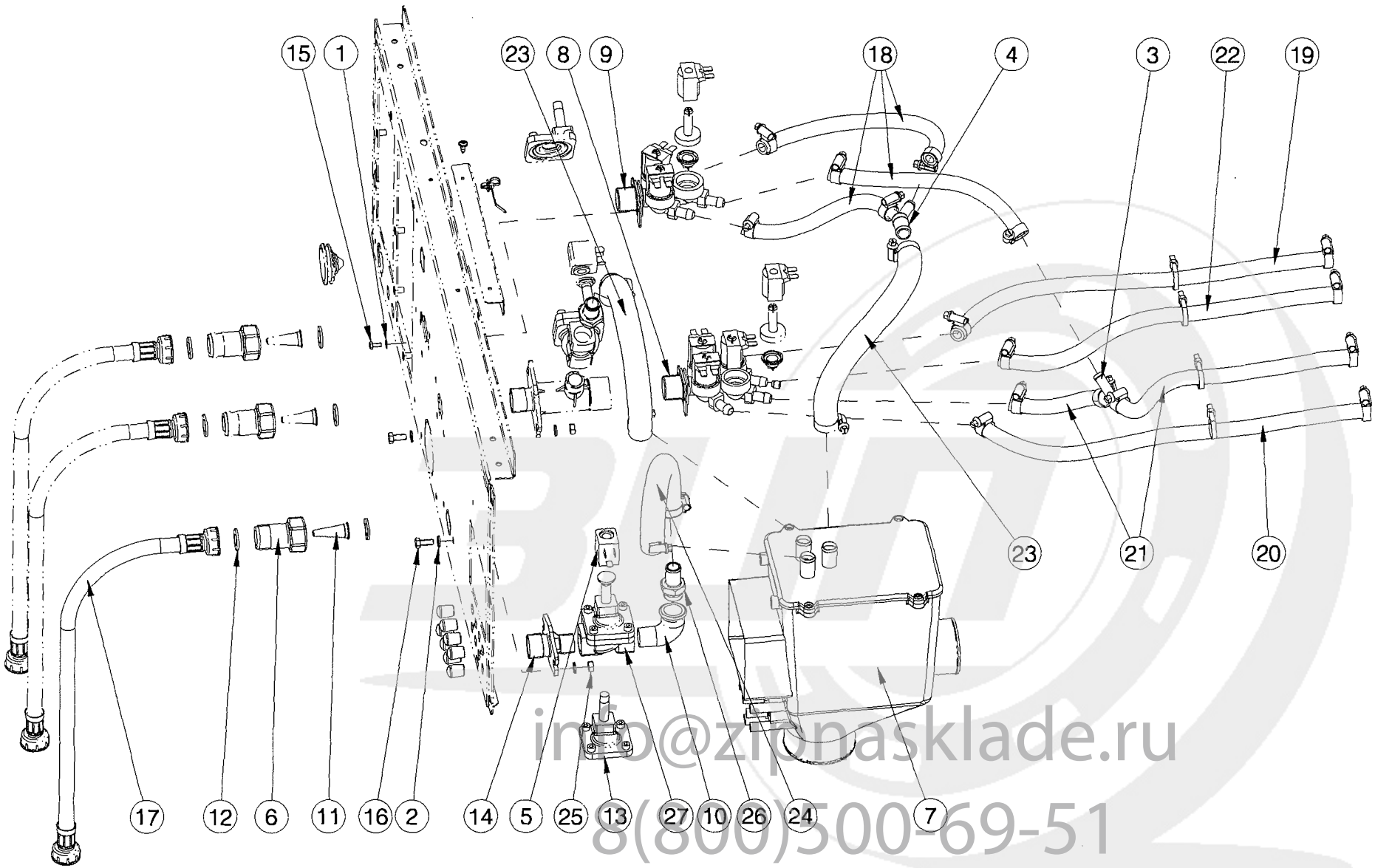

info@zipnasklade.ru
8(800)500-69-51

Nº	REF	DENOMINATION	DENOMINACIÓN	DENOMINATION
1	149476	BICR.WASHER B DIN125-ST 4,3	ARAN.B DIN125-ST B.TRI. 4,3	RONDELLE B DIN125-ST BICR.4,3
2	149526	BICR.WASHER B DIN125-ST 6,4	ARAN.B DIN125-ST B.TRI. 6,4	RONDELLE B DIN125-ST BICR.6,4
3	152165	BRANCH	BIFURCACION	BIFURCATION
4	321463	BRANCH OF 16-10,5-10,5	BIFURCACION DE 16-10,5-10,5	BIFURCATION DE 16-10,5-10,5
5	333716	COIL AB 5W 12V CC 042N0806	BOBINA AB 5W 12V CC 042N0806	BOBINE AB 5W 12V CC 042N0806
6	315317	FILTER BODY	CUERPO FILTRO	CORPS FILTRE
7	333658	DISTRIBUTOR	DISTRIBUIDOR	DISTRIBUTEUR
8	511212	4 TRACK ELECTROVALVE 389 180ºC	ELECTROV.CUADRUPLE 389 180º *	ELECTROVANNE 4 VOIES 389 180ºC
	156265	REGULATOR 3 L/MIN (BLACK)	REGULADOR DE 3 L/MIN. (NEGRO)	REGULATEUR 3 L/MIN (NOIR)
	510933	REGULATOR 4 L/MIN.RED	REGULADOR DE 4L/MIN.ROJO CLARO	REGULATEUR 4 L/MIN ROUGE
	300194	YELLOW CASE 30053	ESTUCHE AMARILLO 30053	BOITE JAUNE 30053
	300202	INTEGRAL GUIDE-MEMBRANE 30696	MEMBRANA-GUIA INTEGRAL 30696 *	MEMBRANE-GUIDE INTEGRALE 30696
	332296	COIL 255043000000 12VCC	BOBINA 255043000000 12VCC	BOBINE 255043000000 12VCC
9	333674	TRIPLE ELECTROVALVE 369 180º	ELECTROV.TRIPLE 369 180º12VCC*	ELECTROVANNE TRIPLE 369 180º
	300194	YELLOW CASE 30053	ESTUCHE AMARILLO 30053	BOITE JAUNE 30053
	300202	INTEGRAL GUIDE-MEMBRANE 30696	MEMBRANA-GUIA INTEGRAL 30696 *	MEMBRANE-GUIDE INTEGRALE 30696
	332296	COIL 255043000000 12VCC	BOBINA 255043000000 12VCC	BOBINE 255043000000 12VCC
10	129494	ELBOW FIG 92 1/2" GALV	FIGURA 92 DE 1/2"AMAT GALV.	COUDE FIG 92 1/2" GALV
11	315614	CONICAL FILTER REF.4008-2-1	FILTRO CONICO REF.4008-2-1	FILTRE CONIQUE REF.4008-2-1
12	114348	GASKET D24XD13,5X2	JUNTA MIFLEX D24X13, 5X2 EPDM WRC 400105	JOINT D24XD13,5X2
13	341685	SPARE-PARTS KIT EV220A 12-14B	KIT REPUES.EV220A 12-14B *	KIT RECHANGES EV220A 12-14B
14	338152	ELECTROVALVE BRACKET	SOPORTE ELECTROVALVULAS	SUPPORT ELECTROVANNES
15	146258	BIC.HEX SCREW DIN933-4.8 M4X10	TOR.EX.DIN933-4.8 B.TRI.M 4X10	VIS HEX DIN933-4.8 BICR.M 4X10
16	146233	BICR.HEX SCREW DIN933-8 M6X15	TOR.EX.DIN933-8.8 B.TRI.M 6X15	VIS HEX DIN933-8.8 BICR.M6X15
17	326587	WATER INLET AC DI12,5 L1,5M	TUBO ENTRADA AC DI12,5 L1,5M *	FLEXIBLE ENTRÉE AC DI12,5 L1,5
18	410613	WATER INLET HOSE	TUBO ENTRADA AGUA	TUBE ENTRÉE EAU
19	411389	WATER INLET HOSE	TUBO ENTRADA AGUA	TUBE ENTREE EAU
20	411397	WATER INLET HOSE	TUBO ENTRADA AGUA	TUBE ENTREE EAU

info@zipnasklade.ru
8(800)500-69-51

Nº	REF	DENOMINATION	DENOMINACIÓN	DENOMINATION
21	427187	WATER INLET HOSE	TUBO ENTRADA AGUA	TUBE ENTREE EAU
22	427195	WATER INLET HOSE	TUBO ENTRADA AGUA	TUBE ENTREE EAU
23	427211	WATER INLET HOSE	TUBO ENTRADA AGUA	TUBE ENTREE EAU
24	427229	WATER INLET HOSE	TUBO ENTRADA AGUA	TUBE ENTREE EAU
25	150227	BICR HEX NUT DIN934-8 M6	TUER.EX.DIN934-8 B.TRI.M 6	ECROU HEX DIN934-8 BICR.M6
26	333690	FIG. 243 MI 1/2" BRASS	FIGURA 243 MI DE 1/2" LATON	FIG. 243 MI 1/2" LAITON
27	333708	VALVE EV220A G12 042U4022	CUERPO VAL.EV220A G12 042U4022	VANNE EV220A G12 042U4022
		THIRD WATER INLET KITS	KITS TERCERA ENTRADA AGUA	KITS TROISIEME ENTREE EAU
	793513	THIRD WATER INLET KIT	KIT TERCERA ENTRADA AGUA	KIT TROISIEME ENTREE EAU

info@zipnasklade.ru
8(800)500-69-51

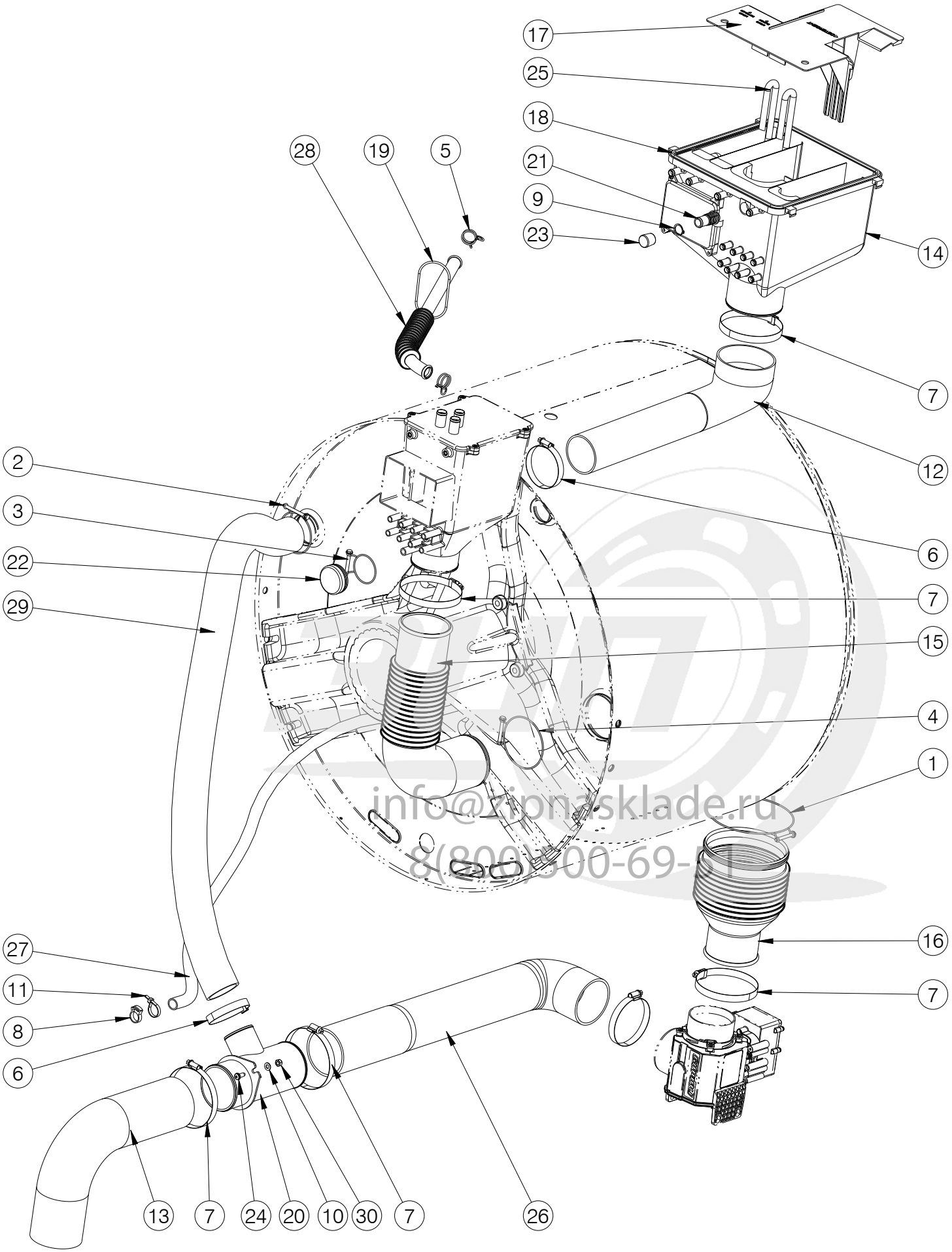

info@zipnisklade.ru
8(800)500-69-51

Nº	REF	DENOMINATION	DENOMINACIÓN	DENOMINATION
1	333450	WASHER D137XD2	ABRAZ.ALAMBRE D137XD2	RONDELLE D137XD2
2	340505	WASHER SWHCFS 5850	ABRAZ.ALAMBRE SWHCFS 5850	RONDELLE SWHCFS 5850
3	350439	WASHER SWHCFS 4942	ABRAZ.ALAMBRE SWHCFS 4942	RONDELLE SWHCFS 4942
4	333443	WASHER SWHCFS 8780	ABRAZ.ALAMBRE SWHCFS 8780	RONDELLE SWHCFS 8780
5	338897	CLAMP 20,2	ABRAZ. F.I.M. 20202 B20,2	BRIDE 20,2
6	132290	CLAMP 301730-8 D50-70	ABRAZADERA 301730-8 D50- 70	BRIDE 301730-8 D50-70
7	132340	CLAMP REF.30173380-2 D80-100	ABRAZADERA REF.30173380-2 D80-100	BRIDE REF.30173380-2 D80-100
8	323675	CLAMP NORMA 22HC0593	ABRAZADERA NORMA 22HC0593	COLLIER NORMA 22HC0593
9	131508	FLEXIBLE RING E-17 DIN 471	ANILLO ELASTICO E-17 DIN 471	BAGUE ELASTIQUE E-17 DIN 471
10	149526	BICR.WASHER B DIN125-ST 6,4	ARAN.B DIN125-ST B.TRI. 6,4	RONDELLE B DIN125-ST BICR.6,4
11	140525	CLAMP 2244-0	BRIDA UNEX 2244-0 *	BRIDE 2244-0
12	333534	RUBBER ELBOW 379X67	CODO GOMA 379X67	COUDE GOMME 379X67
13	163253	DRAIN OUTLET HOSE	TUBO SALIDA DESAGÜE	TUBE SORTIE VIDANGE
14	511584	SOAP DISPENSER SET	CONJUNTO DOSIFICADOR	ENSEMBLE BAC A PRODUITS
15	333518	OUTERDRUM COLLECTOR BELLOWS	FUELLE COLECTOR ENVOLVENTE	DURITE COLLECTEUR CUVE
16	333500	OUTERDRUM DRAIN BELLOWS	FUELLE DESAGÜE ENVOLVENTE	DURITE VIDANGE CUVE
17	344101	SOAP DOSING INSERTO	INSERTO DOSIFICADOR	INSERTO BAC A PRODUITS
18	321430	SOAP DISPENSER GASKET	JUNTA DOSIFICADOR	JOINT BACS A PRODUITS
19	159681	TORIC GASKET 50X56X3 RE.2676	JUNTA TORICA 50X56X3 RE.2676	JOINT TORIQUE 50X56X3 REF.2676
20	333575	DRAIN SLEEVE	MANGUITO DESAGÜE	FRETTE VIDANGE
21	321349	WATER INLET RACCORD	RACOR ENTRADA AGUA DIRECTA	RACCORD ENTREE EAU
22	349902	RUBBER PLUG D42	TAPON GOMA D42	BOUCHON GOMME D42
23	156687	CONICAL END-PIECE R-16 D16	TOPE CONICO REPRIMSA R-16 D16	ARRET CONIQUE R-16 D16
24	333625	SCREW T25 A18EST.M6X15 TRI.	TOR.ALOM.T25 A18EST.M6X15 TRI.(ESPECIAL)	VIS T25 A18EST.M6X15 TRI.
25	339598	ASPIRATION HOSE	TUBO ASPIRACION	TUBE ASPIRATION
26	429803	DRAIN HOSE	TUBO DESAGÜE	TUBE VIDANGE
27	283820	BEARING BOX DRAIN HOSE	TUBO DESAGÜE CAJA COJINETES	TUBE VIDANGE BOITE ROULEMENTS
28	338889	VAPOUR OUTLET HOSE	TUBO DESVAPORIZADOR	TUBE SORTIE CONDENSATS

info@zipnasklade.ru
8(800)500-69-51

Nº	REF	DENOMINATION	DENOMINACIÓN	DENOMINATION
29	427419	OVERFLOW HOSE	TUBO REBOSADERO	TUBE DEVERSOIR
30	176834	SELF-LOCKING NUT DIN985-8 B.TRI.M6	TUER.AUTOBL.DIN985-8 B.TRI.M6	ECROU AUTOBLOCANT DIN985-8 B.TRI.M6
		SECOND DRAIN KIT	KIT 2º DESAGÜE	KIT DEUXIEME VIDANGE
	796854	2 DRAIN KIT HS-6IC	KIT 2º DESAGÜE HS-6IC	KIT 2 VIDANGE HS-6IC
		WITHOUT ILLUSTRATION	SIN ILUSTRACION	SANS ILLUSTRATION
	796870	SIPHON CLEANING KIT	KIT LIMPIEZA SIFONES	KIT NETTOYAGE SIPHON

info@zipnasklade.ru
8(800)500-69-51

HS-6017 LC
Pág. 13

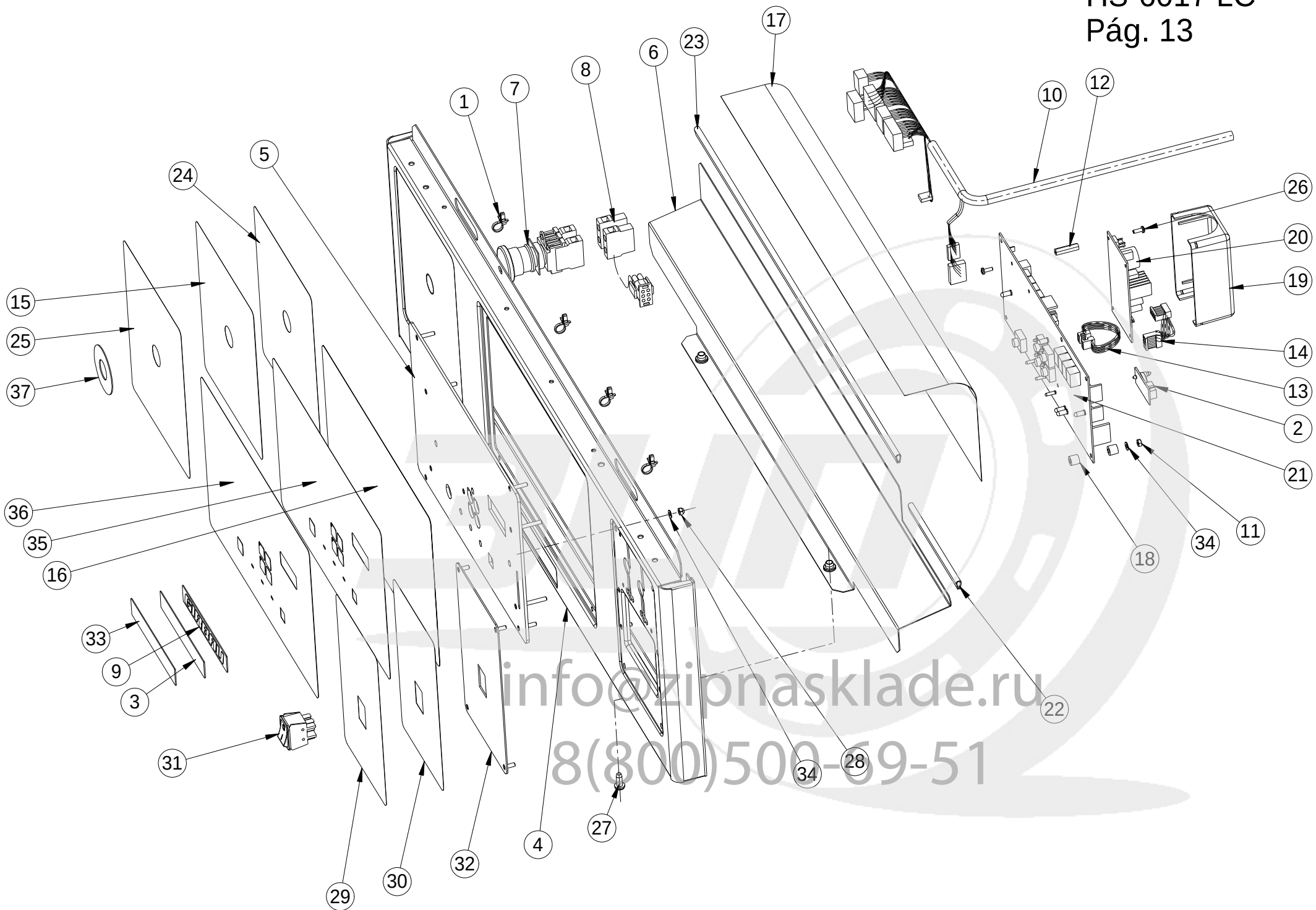

info@zipnasklade.ru
8(800)500-69-51

Nº	REF	DENOMINATION	DENOMINACIÓN	DENOMINATION
1	326132	CABLE TIE Ø35 NATURAL	ABRAZADERA Ø35 NATURAL	BRIDE Ø35 NATUREL
2	322677	CLOCK CIRCUIT	CIRCUITO RELOJ	CIRCUIT HORLOGE
3	326082	PLATE CONTINENTAL GIRBAU	PLACA CONTINENTAL GIRBAU	PLAQUE CONTINENTAL GIRBAU
4	10598621	CONTROL PANEL	PANEL DE MANDOS	PANNEAU DE COMMANDES
5	594804	CONTROL PANEL PLATE	PLACA PANEL DE MANDOS	PLAQUE PANNEAU DE COMMANDES
6	423434	CONTROL PANEL PROFILE	PERFIL PANEL DE MANDOS	PROFILE PANNEAU DE COMMANDES
7	341529	EMERGENCY STOP LC	PARO EMERGENCIA LC	ARRET EMERGENCE LC
8	342006	EMERGENCY STOP PLUG	CONECTORA PARO EMERGENCIA	CONNECTEUR ARRET EMERGENCE
9	326074	PLATE GIRBAU	PLACA GIRBAU	PLAQUE GIRBAU
10	343509	HARNESS	CABLEADO ELECTRICO	CABLAGE
11	150185	BICR.HEX.NUT DIN934-8 M4	TUER.EX.DIN934-8 B.TRI.M 4	ECROU HEX.DIN934-8 BICR.M4
12	322685	SEPARATOR HEX.HS6-8	SEPARADOR EXAGONAL HS6-8	SEPARATEUR HEX. HS6-8
13	338186	IDENTIFICATION CENNECTOR	CONECTORA IDENTIFICACION	CONNECTEUR IDENTIFICATION
14	342451	INSTALLATION PLUG	CONECTORA INSTALACION	CONNECTEUR INSTALLATION
15	10699163	LABEL	ETIQUETA	ÉTIQUETTE
16	10034825	LC WASHER KEYBOARD	TECLADO LAVADORA LC	CLAVIER LAVEUSE LC
17	430454	MICRO BOARD PROTECTION	PROTECCION PLACA MICRO	PROTECTION PLAQUE MICRO
18	322768	MICRO BOARD SEPARATOR	SEPARADOR PLACA MICRO	SEPARATEUR PLAQUE MICRO
19	326843	MICROPROCESSOR PLATE COVER	TAPA PLACA MICROPROCESADOR	COUVERCLE PLAQUE MICROPROSSEUR
20	332718	POWER SOURCE MW PS-25-12	FUENTE ALIMENT.MW PS-25-12	FONT ALIMENT.MW PS-25-12
21	594507	MICROP. BOARD H6013/17 LC/CC	PLACA MICROP.H6013/17 LC/CC	PLAQUE MICROP. H6013/17 LC/CC
22	192021	PROFILE	ENCUADERNADOR P (NEGRO) 2MT.	PROFILE
23	192021	PROFILE	ENCUADERNADOR P (NEGRO) 2MT.	PROFILE
24	338020	SAFETY INSTR.LABEL EN (FOR USA AND CANADA ONLY)	ETIQUETA INSTR. SEGURIDAD EN (SOLO PARA USA Y CANADA)	ETIQUETTE INSTR.SECURITE EN (SEULEMENT POUR USA ET CANADA)
25	343046	SAFETY INSTR.LABEL JA (JAPENESE)	ETIQUETA INSTR. SEGURIDAD JA (JAPONES)	ETIQUETTE INSTR.SECURITE JA (JAPONAIS)
26	322693	SCREW PT KN35X10 WN1412	TORNILLO PT KN35X10 WN1412 (ESPECIAL)	VIS PT KN35X10 WN1412
27	333294	SCREW T25 AR.18ESTR.M 6X15 INOX	TORNILLO ALOM.T25 M 6X15 INOX(ESPECIA	VIS T25 AR.18ESTR.M 6X15 INOX

info@zipnasklade.ru
8(800)500-69-51

Nº	REF	DENOMINATION	DENOMINACIÓN	DENOMINATION
28	132043	SELF-LOCKING NUT DIN985-8 B.TRI.M 4	TUER.AUTOBL.DIN985-8 B.TRI.M 4	ECROU AUTOBLOCANT DIN985-8 B.TRI.M 4
29	587816	START-STOP LABEL	ETIQUETA MARCHA-PARO	ETIQUETTE MARCHE-ARRET
30	590356	START-STOP LABEL JA (JAPENESE)	ETIQUETA MARCHA-PARO JA (JAPONES)	ETIQUETTE MARCHE-ARRET JA (JAPONAIS)
31	587519	SWITCH C1550AL	INTERRUPTOR C1550AL	INTERRUPTEUR C1550AL
32	422998	SWITCH PLATE	PLACA INTERRUPTOR	PLAQUE INTERRUPTEUR
33	327023	PLATE VIKING	PLACA VIKING	PLAQUE VIKING
34	149476	BICR.WASHER B DIN125-ST 4,3	ARAN.B DIN125-ST B.TRI. 4,3	RONDELLE B DIN125-ST BICR.4,3
35	303719	WASHER-EXTRACTOR PLATE LC EN (FOR USA AND CANADA ONLY)	CARATULA LAVADORA LC EN (SOLO PARA USA Y CANADA)	PLAQUE LAVEUSE LC EN (SEULEMENT POUR USA ET CANADA)
36	342865	WASHER-EXTRACTOR PLATE LC JA (JAPENESE)	CARATULA LAVADORA LC JA (JAPONES)	PLAQUE LAVEUSE LC JA (JAPONAIS)
37	192294	YELLOW RING	ARO AMARILLO	BAGUE JAUNE

info@zipnasklade.ru
8(800)500-69-51

HS-6017 CC
Pag. 14

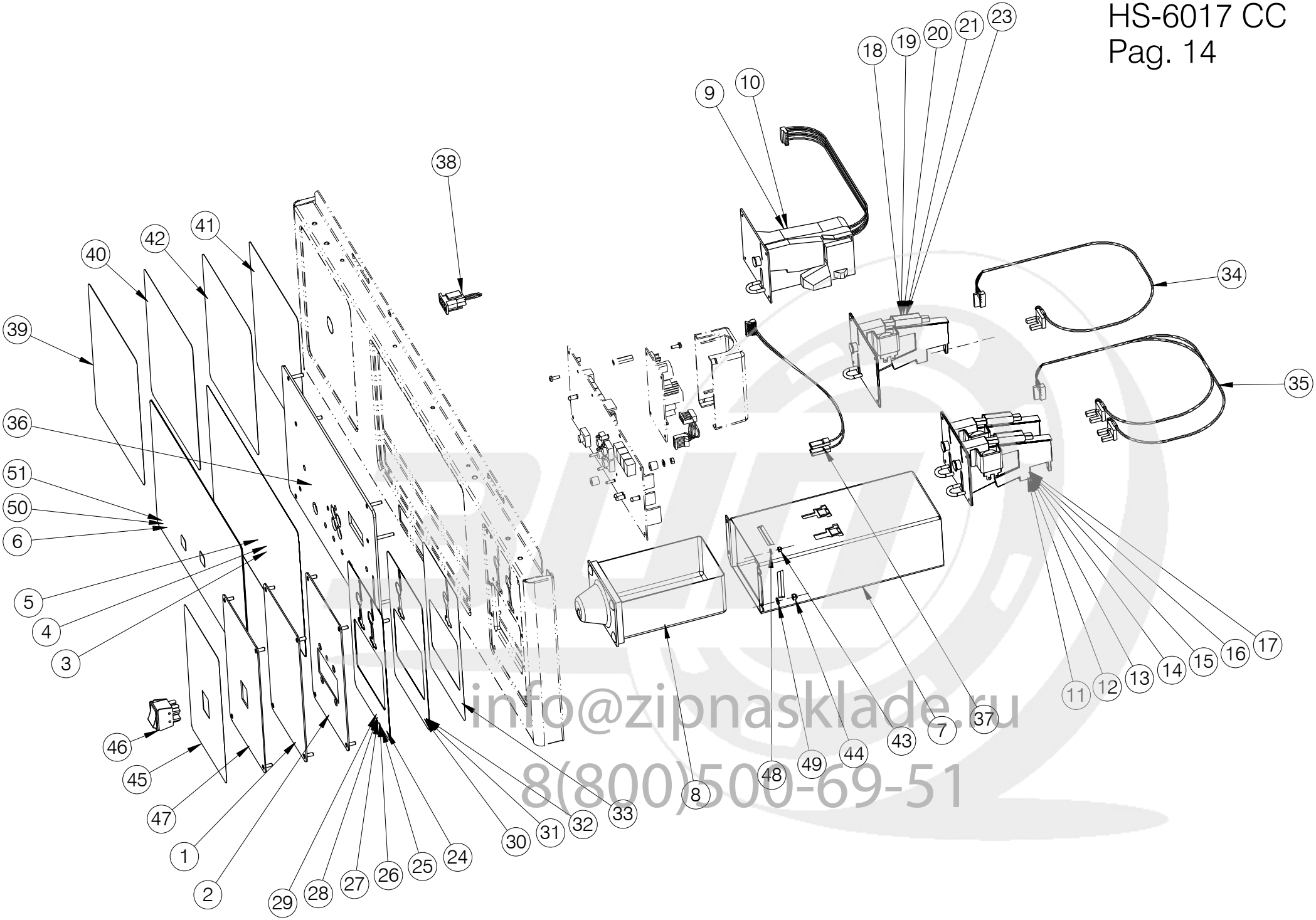

info@zipnasklade.ru
8(800)500-69-51

Nº	REF	DENOMINATION	DENOMINACIÓN	DENOMINATION
1	428656	BLIND PLATE	PLACA CIEGA	PLAQUE AVEUGLE
2	433532	CARD READER PLATE	PLACA LECTOR TARJETA	PLAQUE LECTEUR CARTE
3	593517	COIN CONTROL EXTRA OP. WASHER KEYBOARD (FOR USA AND CANADA ONLY)	TECLADO LAVADORA CC EXTRA OP. (SOLO PARA USA Y CANADA)	CLAVIER LAVEUSE COIN CONTROL EXTRA OP. (SEULEMENT POUR USA ET CANADA)
4	10065480	CC EXTRA OP. WASHER KEYBOARD (FOR PROFITPLUS CONTROL MOD.)	TECLADO LAVADORA CC EXTRA OP. (PARA MOD. PROFITPLUS CONTROL)	CLAVIER LAVEUSE CC EXTRA OP. (POUR MOD. PROFITPLUS CONTROL)
5	10019461	CC EXTRA OP. WASHER KEYBOARD KO (FOR PROFITPLUS CONTROL MOD.) (ONLY KOREA)	TECLADO LAVADORA CC EXTRA OP. KO (PARA MOD. PROFITPLUS CONTROL) (SOLO COREA)	CLAVIER LAVEUSE CC EXTRA OP. KO (POUR MOD. PROFITPLUS CONTROL) (SEULEMENT CORÉE)
6	10017002	CC WASHER KEYBOARD	TECLADO LAVADORA CC	CLAVIER LAVEUSE CC
7	322313	COIN BOX SUPPORT	APOYO CAJON MONEDAS	APPUI BOITE MONNAIE
8	169169	COIN BOX UG400A GI	CAJA MONEDAS UG400A GI *	BOITE MONNAIE UG400A GI
9	327353	COIN-METER EMP 500 EUROS	MONEDERO EMP 500 EUROS	MANNAYEUR EMP 500 EUROS
10	411223	COIN-METER EMP 500 NOT EUROS	MONEDERO EMP 500 NO EUROS	MONNAYEUR EMP 500 NO EUROS
11	323741	COIN-METER F60.1 0,20/2,00EUR	MONEDERO F60.1 0,20/2,00EUR	MONNAYEUR F60.1 0,20/2,00EUR
12	326892	COIN-METER F60.1 0,25/1,00CAD	MONEDERO F60.1 0,25/1,00CAD	MONNAYEUR F60.1 0,25/1,00CAD
13	323659	COIN-METER F60.1 0,25/1,00USD	MONEDERO F60.1 0,25/1,00USD	MONNAYEUR F60.1 0,25/1,00USD
	530261	COIN-METER F60.1 0,25/1 USD THREAD BLOCK	MONEDERO F60.1 0,25/1 USD THREAD BLOCK	MONNAYEUR F60.1 0,25/1 USD THREAD BLOCK
14	326769	COIN-METER F60.1 0,50/1,00 GBP	MONEDERO F60.1 0,50/1,00GBP *	MONNAYEUR F60.1 0,50/1,00 GBP
15	326835	COIN-METER F60.1 1,00/5,00ILS	MONEDERO F60.1 1,00/5,00ILS *	MONNAYEUR F60.1 1,00/5,00 ILS
16	431007	COINMETER F60.1 100/500 JPY	MONEDERO F60.1 100/500 JPY *	MONNAYEUR F60.1 100/500 JPY
17	354035	COINMETER F60.1 10/50 NTD	MONEDERO F60.1 10/50NTD *	MONNAYEUR F60.1 10/50 NTD
18	524157	COIN-METER F60.11 500 WON	MONEDERO F60.11 500 WON*	MONNAYEUR F60.11 500 WON
19	323642	COIN-METER F60.11 0,25USD	MONEDERO F60.11 0,25USD	MONNAYEUR F60.11 0,25USD
	530253	COIN-METER F60.11 0,25USD THREAD BLOCKIN	MONEDERO F60.11 0,25USD THREAD BLOCKING	MONNAYEUR F60.11 0,25USD THREAD BLOCKING
20	326777	COIN-METER F60.11 100YEN	MONEDERO F60.11 100YEN *	MONNAYEUR F60.11 100YEN
21	344622	COIN-METER F60.11 10NTD	MONEDERO F60.11 10NTD *	MONNAYEUR F60.11 10NTD
22	10098655	COIN METER F60.11 TOKEN ECO MALAYSIA	MONEDERO F60.11 FICHA ECO MALASIA	MONNAYEUR F60.11 JETON ECO MALASIA
23	323733	COIN-METER F60.11W2000-TOKEN G	MONEDERO F60.11 FICHA GIRBAU *	MONNAYEUR F60.11W2000 JETON GI
24	339325	COINMETER LABEL CC-MD EUR	ETIQUETA MONEDERO CC-MD EUR	ETIQUETTE MONNAYEUR CC-MD EUR

info@zipnasklade.ru
8(800)500-69-51

Nº	REF	DENOMINATION	DENOMINACIÓN	DENOMINATION
25	339507	COINMETER LABEL CC-MD GBP	ETIQUETA MONEDERO CC-MD GBP	ETIQUETTE MONNAYEUR CC-MD GBP
26	339515	COINMETER LABEL CC-MD NIS	ETIQUETA MONEDERO CC-MD NIS	ETIQUETTE MONNAYEUR CC-MD NIS
27	354043	COINMETER LABEL CC-MD NTD	ETIQUETA MONEDERO CC-MD NTD	ETIQUETTE MONNAYEUR CC-MD NTD
28	339499	COINMETER LABEL CC-MD USD	ETIQUETA MONEDERO CC-MD USD	ETIQUETTE MONNAYEUR CC-MD USD
29	342550	COINMETER LABEL CC-MD YEN	ETIQUETA MONEDERO CC-MD YEN	ETIQUETTE MONNAYEUR CC-MD YEN
30	339564	COINMETER LABEL CC-MS YEN	ETIQUETA MONEDERO CC-MS YEN	ETIQUETTE MONNAYEUR CC-MS YEN
31	339549	COINMETER LABEL CC-MS-25C	ETIQUETA MONEDERO CC-MS-25C	ETIQUETTE MONNAYEUR CC-MS-25C
32	339523	COINMETER LABEL CC-MS-FG	ETIQUETA MONEDERO CC-MS-FG	ETIQUETTE MONNAYEUR CC-MS-FG
33	339234	COINMETER LABEL CC-MU	ETIQUETA MONEDERO CC-MU	ETIQUETTE MONNAYEUR CC-MU
34	322461	COIN-METER 1 PLUG	CONECTORA 1 MONEDERO	CONNECTEUR 1 MONNAYEUR
35	322453	COIN-METER 2 PLUG	CONECTORA 2 MONEDERO	CONNECTEUR 2 MONNAYEURS
36	601401	PANEL DE MANDOS	PANEL DE MANDOS	PANEL DE MANDOS
37	411678	COIN-METER PLUG	CONECTORA MONEDERO	CONNECTEUR MONNAYEUR
38	341990	EMERGENCY STOP PLUG	CONECTORA PARO EMERGENCIA	CONNECTEUR ARRET EMERGENCE
39	10568681	LABEL	ETIQUETA	ÉTIQUETTE
40	303693	SAFETY INSTR.LABEL EN (FOR USA AND CANADA ONLY)	ETIQUETA INSTR. SEGURIDAD EN (SOLO PARA USA Y CANADA)	ETIQUETTE INSTR.SECURITE EN (SEULEMENT POUR USA ET CANADA)
41	343053	SAFETY INSTR.LABEL JA (JAPENESE)	ETIQUETA INSTR. SEGURIDAD JA (JAPONES)	ETIQUETTE INSTR.SECURITE JA (JAPONAIS)
42	614677	SAFETY INSTR.LABEL KO (ONLY KOREA)	ETIQUETA INSTR. SEGURIDAD KO (SOLO COREA)	ETIQUETTE INSTR.SECURITE KO (SEULEMENT CORÉE)
43	129692	SELF-LOCKING NUT DIN985-8 B.TRI.M 3	TUER.AUTOBL.DIN985-8 B.TRI.M 3	ECROU AUTOBLOCANT DIN985-8 B.TRI.M 3
44	132043	SELF-LOCKING NUT DIN985-8 B.TRI.M 4	TUER.AUTOBL.DIN985-8 B.TRI.M 4	ECROU AUTOBLOCANT DIN985-8 B.TRI.M 4
45	429878	START-STOP LABEL CP (WITH PUSH-BUTTON)	ETIQUETA MARCHA-PARO CP (CON PULSADOR)	ETIQUETTE MARCHE-ARRET CP (AVEC BOUTON-POUSSOIR)
46	138339	PUSH-BUTTON C6061AL	PULSADOR C6061AL *	BOUTON-POUSSOIR C6061AL
47	422998	SWITCH PLATE (WITH PUSH-BUTTON)	PLACA INTERRUPTOR (CON PULSADOR)	PLAQUE INTERRUPTEUR (AVEC BOUTON-POUSSOIR)
48	149484	WASHER DIN 125B M3 ST TRIVALENT	ARANDELA DIN 125B M3 ST TRIVALENTE	RONDELLE DIN 125B M3 ST TRIVALENT
49	149476	BICR.WASHER B DIN125-ST 4,3	ARAN.B DIN125-ST B.TRI. 4,3	RONDELLE B DIN125-ST BICR.4,3

info@zipnasklade.ru
8(800)500-69-51

Nº	REF	DENOMINATION	DENOMINACIÓN	DENOMINATION
50	342857	WASHER-EXTRACTOR PLATE CC JA (JAPENESE)	CARATULA LAVADORA CC JA (JAPONES)	PLAQUE LAVEUSE CC JA (JAPONAIS)
51	10552263	WASHER-EXTRACTOR PLATE CC KO (ONLY KOREA)	CARATULA LAVADORA CC KO (SOLO COREA)	PLAQUE LAVEUSE CC KO (SEULEMENT CORÉE)
		WITHOUT ILLUSTRATION	SIN ILUSTRACION	SANS ILLUSTRATION
	796839	VENDING VN SERIE 6 SET	KIT VENDING VN SERIE 6	KIT VENDING VN SERIE 6
	614503	KIT PROFIT PLUS HS-6013/17 (EXCEPT FOR USA AND CANADA)	KIT PROFIT PLUS HS-6013/17 (EXCEPTO PARA USA Y CANADA)	KIT PROFIT PLUS HS-6013/17 (SAUF POUR USA ET CANADA)
	639088	KIT PROFIT PLUS HS-6013/17 KO (ONLY KOREA)	KIT PROFIT PLUS HS-6013/17 KO (SOLO COREA)	KIT PROFIT PLUS HS-6013/17 KO (SEULEMENT CORÉE)
	609123	KIT PROFIT PLUS EH030/40 (FOR USA AND CANADA ONLY)	KIT PROFIT PLUS EH030/40 (SOLO PARA USA Y CANADA)	KIT PROFIT PLUS EH030/40 (SEULEMENT POUR USA ET CANADA)

info@zipnasklade.ru
8(800)500-69-51

HS-6017 IC
Pag. 15

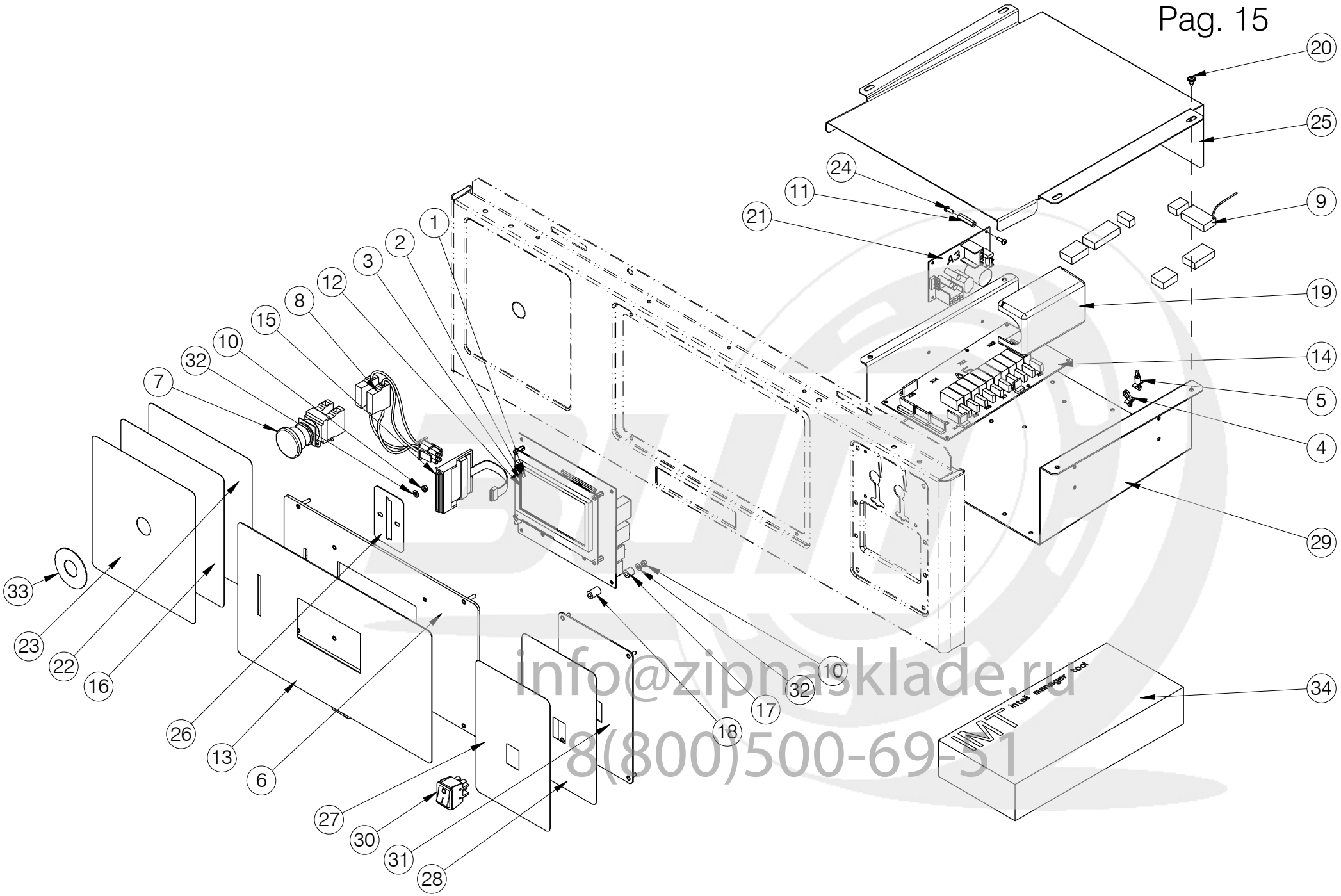

info@zipnasklade.ru
8(800)500-69-51

Nº	REF	DENOMINATION	DENOMINACIÓN	DENOMINATION
1	10080315	MICROPROCESSOR BOARD IC ADVANCE	PLACA MICROPROCESADOR IC ADVANCE	CARTE MICROPROCESSEUR IC ADVANCE
2	10240547	MICROPROCESSOR BOARD IC ALLWET	PLACA MICROPROCESADOR IC ALLWET	CARTE MICROPROCESSEUR IC ALLWET
3	10128981	MICROPROCESSOR BOARD IC AQUATOUCH	PLACA MICROPROCESADOR IC AQUATOUCH	CARTE MICROPROCESSEUR IC AQUATOUCH
4	326132	CABLE TIE Ø35 NATURAL	ABRAZADERA Ø35 NATURAL	BRIDE Ø35 NATUREL
5	332809	CIRCUIT BRACKET LCBS-4-7-01	SOPORTE CIRCUITO LCBS-4-7-01	SUPPORT CIRCUIT LCBS-4-7-01
6	429902	CONTROL PANEL PLATE	PLACA PANEL DE MANDOS	PLAQUE PANNEAU DE COMMANDE
7	341511	EMERGENCY STOP IC	PARO EMERGENCIA IC	ARRET EMERGENCE IC
8	342014	EMERGENCY STOP PLUG	CONECTORA PARO EMERGENCIA	CONNECTEUR ARRET EMERGENCE
9	343558	HARNESS	CABLEADO ELECTRICO	CABLAGE
10	150185	BICR.HEX.NUT DIN934-8 M4	TUER.EX.DIN934-8 B.TRI.M 4	ECROU HEX.DIN934-8 BICR.M4
11	322685	SEPARATOR HEX.HS6-8	SEPARADOR EXAGONAL HS6-8	SEPARATEUR HEX. HS6-8
12	437434	SCREEN KIT LCD IC	CONJUNTO PANTALLA LCD IC	ENSEMBLE ÉCRAN LCD IC
13	338046	IC WASHER EXTRACTOR KEYBOARD	TECLADO LAVADORA IC	CLAVIER MACHINE A LAVER IC
14	353326	INTELI LABEL E/S-1/D	PLACA INTELI E/S-1/D	PLAQUE INTELI E/S-1/D
15	332684	INTELI SMARTCARD SOCKET	ZOCALO TARJETA INTELI *	SOCLE TARGETTE SMARTCARD INTEL
16	10699163	LABEL	ETIQUETA	ÉTIQUETTE
17	322768	MICRO BOARD SEPARATOR	SEPARADOR PLACA MICRO	SEPARATEUR PLAQUE MICRO
18	338038	MICRO BOARD SPACER	SEPARADOR PLACA MICRO	SEPARATEUR PLAQUE MICRO
19	326843	MICROPROCESSOR PLATE COVER	TAPA PLACA MICROPROCESADOR	COUVERCLE PLAQUE MICROPROSSEUR
20	183400	PLATE SCREW ST-4, 20 P.F. C/AL.T25	TORNILLO CHAPA ST-4 (ESPECIAL)*	VIS PLAQUE ST-4, 20 P.F. C/AL.T25
21	332718	POWER SOURCE MW PS-25-12	FUENTE ALIMENT.MW PS-25-12	FONT ALIMENT.MW PS-25-12
22	338020	SAFETY INSTR.LABEL EN (FOR USA AND CANADA ONLY)	ETIQUETA INSTR. SEGURIDAD EN (SOLO PARA USA Y CANADA)	ETIQUETTE INSTR.SECURITE EN (SEULEMENT POUR USA ET CANADA)
23	343046	SAFETY INSTR.LABEL JA (JAPENESE)	ETIQUETA INSTR. SEGURIDAD JA (JAPONES)	ETIQUETTE INSTR.SECURITE JA (JAPONAIS)
24	322693	SCREW PT KN35X10 WN1412	TORNILLO PT KN35X10 WN1412 (ESPECIAL)	VIS PT KN35X10 WN1412
25	431015	SET COVER E/S 1A	TAPA CONJUNTO E/S 1A	COUVERCLE ENSEMBLE E/S 1A
26	423020	CARD FIXING-PIECE SMARTCARD	FIJACION TARJETA SMARTCARD	FIXATION TARGETTE SMARTCARD
27	587816	START-STOP LABEL	ETIQUETA MARCHA-PARO	ETIQUETTE MARCHE-ARRET

info@zipnasklade.ru
8(800)500-69-51

Nº	REF	DENOMINATION	DENOMINACIÓN	DENOMINATION
28	590356	START-STOP LABEL JA (JAPENESE)	ETIQUETA MARCHA-PARO JA (JAPONES)	ETIQUETTE MARCHE-ARRET JA (JAPONAIS)
29	431031	BRACKET PLATE E/S 1A	PLANCHA SOPORTE E/S 1A	PLAQUE SUPPORT E/S 1A
30	587519	SWITCH C1550AL	INTERRUPTOR C1550AL	INTERRUPTEUR C1550AL
31	422998	SWITCH PLATE	PLACA INTERRUPTOR	PLAQUE INTERRUPTEUR
32	149476	BICR.WASHER B DIN125-ST 4,3	ARAN.B DIN125-ST B.TRI. 4,3	RONDELLE B DIN125-ST BICR.4,3
33	192294	YELLOW RING	ARO AMARILLO	BAGUE JAUNE
34	529321	INTELI IMTX PACK	PACK INTELI IMTX	PACK INTELI IMTX
		WITHOUT ILLUSTRATION	SIN ILUSTRACION	SANS ILLUSTRATION
	565895	COMMUNICATION BOARD COM-C *	PLACA COMUNICACIONES COM-C *	PLAQUE COMMUNICATIONS COM-C/609164
	340539	INTELI SMARTCARD CARD	TARJETA SMARTCARD INTELI	CARTE SMARTCARD INTELI

info@zipnasklade.ru
8(800)500-69-51

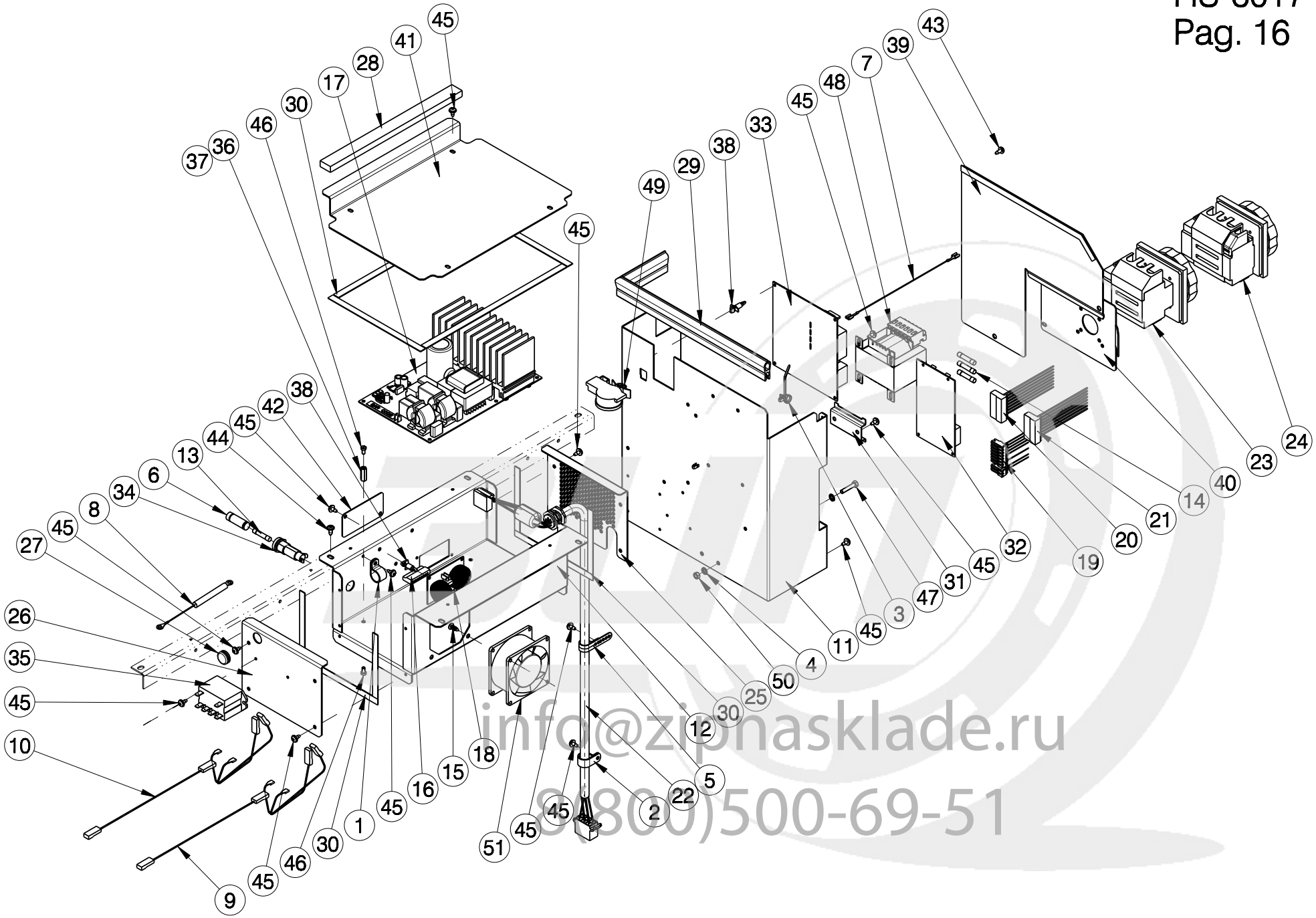

info@zipnasklade.ru
8(800)500-69-51

Nº	REF	DENOMINATION	DENOMINACIÓN	DENOMINATION
1	323055	ALUMINIUM CLAMP AL2	ABRAZADERA ALUMINIO AL2	BRIDE ALUMINIUM AL2
2	332957	ALUMINIUM WASHER AL9	ABRAZADERA ALUMINIO AL9	RONDELLE ALUMINIUM AL9
3	326132	CABLE TIE Ø35 NATURAL	ABRAZADERA Ø35 NATURAL	BRIDE Ø35 NATUREL
4	149724	BICR EXT.TOOT.WASH.DIN6798 M5	ARAN.DEN.EXT.B.TRI.DIN6798M 5	RONDEL DEN.EX.BICR.DIN6798 M5
5	140418	CLAMP UNEX REF 1201	BRIDA UNEX 1201	BRIDE UNEX REF 1201
6	137661	BAYONET HEAD	CABEZA BAYONETA FEK.031.1613	TETE BAYONETTE
7	430231	EXTERNAL DOSING WIRE (EH040)	CABLE DOSIFICACION EXT. (EH040)	CABLE DOSAGE EXTERNE (EH040)
8	453548	FILTER WIRE CEM (EH040)	CABLE FILTRO CEM (EH040)	CABLE FILTRE CEM (EH040)
9	341818	CONVERTER WIRES (EH040)	CABLES CONVERTIDOR (EH040)	CABLES CONVERTISSEUR (EH040)
10	344358	CONVERTER WIRES (HS-6017)	CABLES CONVERTIDOR (HS-6017)	CABLES CONVERTISSEUR (HS-6017)
11	431098	POWER INLET BOX	CAJA ENTRADA CORRIENTE	BOITE ENTREE COURANT
12	431049	VARIATOR BOX	CAJA VARIADOR	BOITE VARIATEUR
13	339127	FUSE SPT 0001.2534 10A	CART.FUSIB.SPT 0001.2534 10A *	CARTOUCHE SPT 0001.2534 10A
14	321125	FUSE SPT 1 A	CART.FUSIB.SPT 0001.2524 1 A*	CARTOUCHE FUS. SPT 1 A
15	348540	CLIP UNDER PRESSURE	CLIP A PRESION *	CLIP A PRESSION
16	341859	CONVERTER PLUG	CONECTORA CONVERTIDOR	CONNECTEUR CONVERTISSEUR
17	537068	FREQ.INVERTER DANFOSS 1800W (HS-6017)	CONVERTIDOR FREC.DANFOSS 1800W (HS-6017)	(650903) CONVERTISSEUR FREQ.DANFOSS1800W (HS-6017)
18	344325	EMC AUXILIARY FILTER (HS-6017)	FILTRO EMC AUXILIAR (HS-6017)	FILTRE EMC AUXLIAIRE (HS-6017)
19	522102	ELECTROVALVE ELEC.INST. (FOR MOD. LOGI/COIN CONTROL)	INST. ELEC. ELECTROVALVULAS (PARA MOD. LOGI/COIN CONTROL)	INST. ELEC. ELECTROVANNES (POUR MOD. LOGI/COIN CONTROL)
20	342600	ELEC.INST. WITHOUT TRANSFORMER (EH040)	INST. ELEC. SIN TRANSFORMADOR (EH040)	INST.ELEC.SANS TRANSFORMATEUR (EH040)
21	341867	TRANSFORMER ELEC.INST. (HS-6017)	INST. ELEC. TRANSFORMADOR (HS-6017)	INST.ELEC.TRANSFORMATEUR (HS-6017)
22	341842	MOTOR ELEC.INST.	INST. ELEC. MOTOR	INST.ELEC.MOTEUR
23	344176	SECTION SWITCH 32A (FOR MOD. HOT WATER/STEAM)	INTERRUPTOR SECCIONADOR 32A (PARA MOD.AGUA CALIENTE/VAPOR)	INTERRUPTEUR SECTIONNEUR 32A (POUR MOD.EAU CHAUDE/VAPEUR)

info@zipnasklade.ru
8(800)500-69-51

Nº	REF	DENOMINATION	DENOMINACIÓN	DENOMINATION
24	344168	SECTION SWITCH 63A (FOR MACHINES ELECTR.HEATING)	INTERRUPTOR SECCIONADOR 63A (PARA MODELOS CALEFAC.ELECTR.)	INTERRUPTEUR SECTIONNEUR 63A (POUR MACHINES CHAUF.ELECTR.)
25	422535	VARIATOR BOX SIDE PANEL	LATERAL CAJA VARIADOR	LATERAL BOITE VARIATEUR
26	431056	VARIATOR BOX SIDE PANEL	LATERAL CAJA VARIADOR	LATERAL BOITE VARIATEUR
27	332601	SHEATH-LODGING DGB-7	PASAMUROS DGB-7	LOGEMENT DGB-7
28	439000	COVER ABSORBER PROFILE	PERFIL AMORTIGUADOR TAPA	PROFILE AMORTISSEUR COUVERCLE
29	431197	POWER INLET BOX PROFILE	PERFIL CAJA ENTRADA CORRIENTE	PROFILE BOITE ENTREE COURANT
30	321273	PROFILE E0813T00000 UL94HB	PERFIL E0813R00000 UL94HB	PROFILE E0813T00000 UL94HB
31	431106	CONTACTOR FIXING PROFILE	PERFIL FIJACION CONTACTORES	PROFILE FIXATION CONTACTEURS
32	332395	AUXILIARY BOARD HS-60**	PLACA AUXILIAR HS-60**	PLAQUE AUXILIAIRE HS-60**
33	332544	INTELI BOARD E/S-2/A (FOR MOD. INTELI CONTROL)	PLACA INTELI E/S-2/A (PARA MOD. INTELI CONTROL)	PLAQUE INTELI E/S-2/4 (POUR MOD. INTELI CONTROL)
34	160119	FUSE HOLDER REF.FEC 031 1631	PORTAFUSIBLES REF.FEC.031.1631	PORTE-FUSIBLE REF.FEC 031 1631
35	322701	RELAY 12VDC	RELE 12VDC*	RELAIS 12VDC
36	332726	HEX SEPARATOR HTSB-M4-20-7-1 (HS-6017) (6 UNITS) (EH040) (1 UNIT)	SEPARADOR HEX.HTSB-M4-20-7-1 (HS-6017) (6 UNIDADES) (EH040) (1 UNIDAD)	SEPARATEUR HEX HTSB-M4-20-7-1 (HS-6017) (6 UNITES) (EH040) (1 UNITE)
37	341933	HEX SEPARATOR HTSN-M4-20-8-1 (EH040) (5 UNITS)	SEPARADOR HEX.HTSN-M4-20-8-1 (EH040) (5 UNIDADES)	SEPARATEUR HEX HTSN-M4-20-8-1 (EH040) (5 UNITES)
38	332809	CIRCUIT BRACKET LCBS-4-7-01	SOPORTE CIRCUITO LCBS-4-7-01	SUPPORT CIRCUIT LCBS-4-7-01
39	431684	POWER INLET COVER	TAPA ENTRADA CORRIENTE	COUVERCLE ENTREE COURANT
40	431114	SELECTOR COVER	TAPA SELECTOR	COUVERCLE SELECTEUR
41	431148	VARIATOR COVER	TAPA VARIADOR	COUVERCLE VARIATEUR
42	430991	VARIATOR PLUG COVER	TAPETA CONECTOR VARIADOR	COUVERCLE CONNECTEUR VARIATEUR
43	328229	SCREW ALO.T25 AR.18ESTR.M 4X10	TORNILLO ALOM.T25 M 4X10 (ESPECIAL)*	VIS ALOM.T25 AR.18ESTR.M 4X10
44	322750	SCREW FDS SF-M5X12 PKS TORX SPER	TORNILLO FDS SF-M5X12 (ESPECIAL)*	VIS FDS SF-M5X12 PKS TORX SPER
45	183400	PLATE SCREW ST-4, 20 P.F. C/AL.T25	TORNILLO CHAPA ST-4 (ESPECIAL)*	VIS PLAQUE ST-4, 20 P.F. C/AL.T25
46	146076	BICR ROUND SCREW DIN84 M 4X 8	TOR.CIL.DIN84-4.8 B.TRI.M 4X 8	VIS ROND BICR DIN84-4.8 M 4X 8
47	146225	BI.HEX SCREW DIN933-8.8 M-5X25	TOR.EX.DIN933-8.8 B.TRI.M 5X25	VIS HEX BICR.DIN933-8.8 M-5X25

info@zipnasklade.ru
8(800)500-69-51

Nº	REF	DENOMINATION	DENOMINACIÓN	DENOMINATION
48	320614	TRANSFORMER IP00 100 VA CSA (HS-6017)	TRANSFORMADOR IP00 100 VA CSA* (HS-6017)	TRANSFORMATEUR IP00 100 VA CSA (HS-6017)
49	322784	PRESSURE TRANSMITTER 400.95100	TRANSM.PRESION HUBA 400.95100	PRESSOSTAT HUBA 400.95100
50	150177	BICR HEX NUT DIN934-8 M5	TUER.EX.DIN934-8 B.TRI.M 5	ECROU HEX DIN934-8 BIC.M5
51	420976	CONVERTER FAN	VENTILADOR CONVERTIDOR	VENTILATEUR CONVERTISSEUR

info@zipnasklade.ru
8(800)500-69-51

HS-6017
Pag. 17

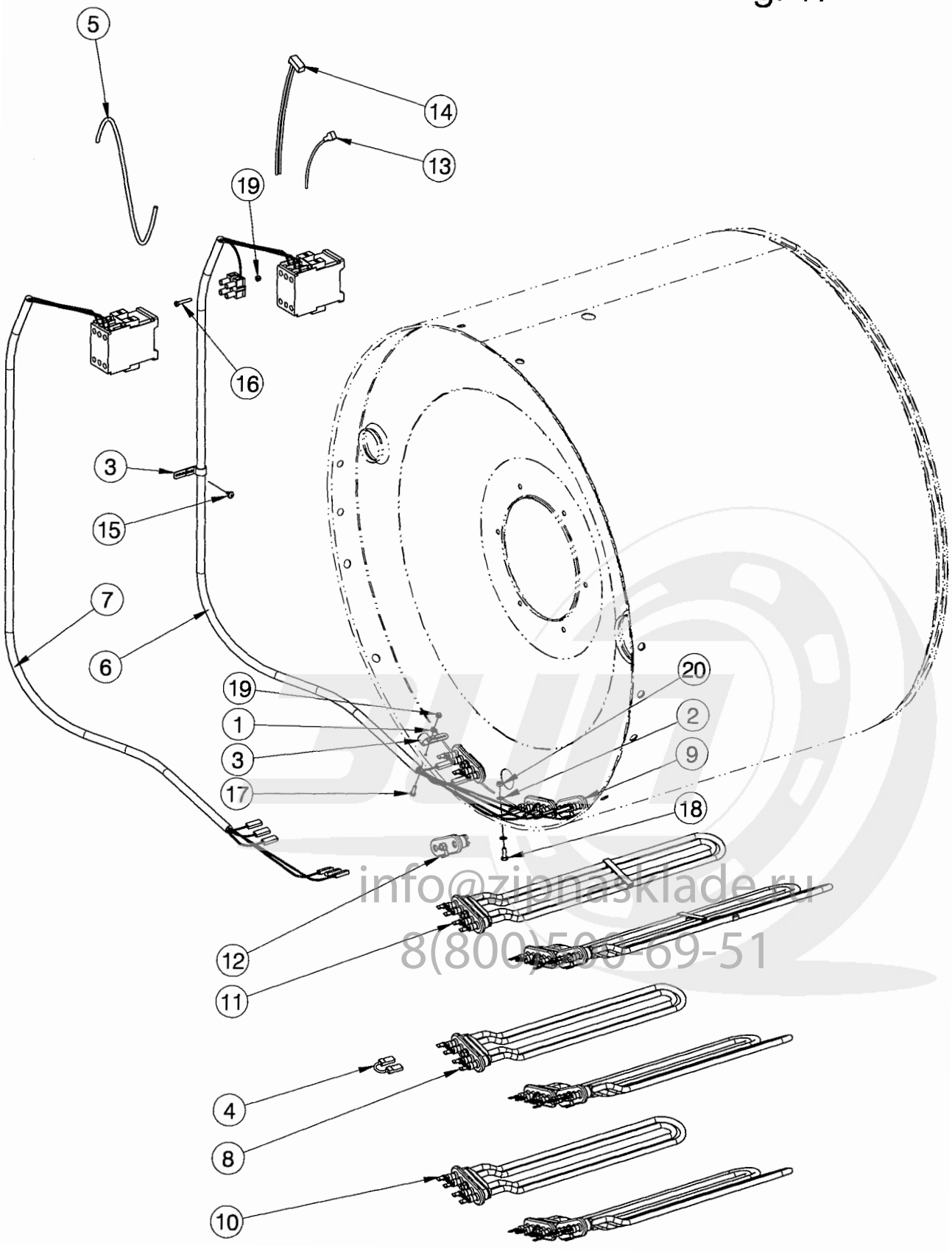

info@zipnasklade.ru
8(800)500-69-51

Nº	REF	DENOMINATION	DENOMINACIÓN	DENOMINATION
		ELECTRIC HEATING KITS	KITS CALEFACCION ELECTRICA .	KITS CHAUFFAGE ELECTRIQUE
	796920	EHK 1PH 200-230 (HS-6017)	KCE 1PH 200-230V (HS-6017)	KCE 1PH 200-230V (HS-6017)
	796938	EHK 1PH (208-240)/240)V (EH040) (FOR 208-240V) (HS-6017) (FOR 240V)	KCE 1PH (208-240) / 240V (EH040) (PARA 208-240V) (HS-6017) (PARA 240V)	KCE.1PH (208-240)/240)V (EH040) (POUR 208-240V) (HS-6017) (POUR 240V)
	796946	EHK 3PH 200-230/380-440V (HS-6017)	KCE 3PH 200-230/380-440V (HS-6017)	KCE 3PH 200-230/380-440V (HS-6017)
	796953	EHK E.3PH(208-240)/240/415 (EH040) (FOR 208-240V) (HS-6017) (FOR 240 AND 415V)	KCE 3PH (208-240)/240/415V (EH040) (PARA 208-240V) (HS-6017) (PARA 240 Y 415V) .	KCE E.3PH(208-240)/240/415 (EH040) (POUR 208-240V) (HS-6017) (POUR 240 ET 415V)
1	149476	BICR.WASHER B DIN125-ST 4,3	ARAN.B DIN125-ST B.TRI. 4,3	RONDELLE B DIN125-ST BICR.4,3
2	149534	BICR.WASHER B DIN125-ST 5,3	ARAN.B DIN125-ST BICR. 5,3	RONDELLE B BICR.DIN125-ST 5,3
3	140418	CLAMP UNEX REF 1201	BRIDA UNEX 1201	BRIDE UNEX REF 1201
4	344366	HEATER BRIDGE WIRE (FOR 1000/2000W)	CABLE PUENTE CALEFACTOR (PARA 1000/200OW)	CABLE PONT RESISTANCE (POUR 1000/2000W)
5	341941	CONTACTOR SUPPLY WIRES	CABLES ALIMENTACION CONTACTOR	CABLES ALIMENTATION CONTACTEUR
6	341826	HEATING CONTACTOR WIRES (FOR THREE-PHASE)	CABLES CONTACTOR CALEFACCION (PARA TRIFASICO)	CABLES CONTACTEUR CHAUFFAGE (POUR TRIPHASE)
7	341834	HEATING CONTACTOR WIRES (FOR SINGLE-PHASE)	CABLES CONTACTOR CALEFACCION (PARA MONOFASICO)	CABLES CONTACTEUR CHAUFFAGE (POUR MONOPHASE)
8	332577	HEATER 230V 2000/1000 W	CALEFACTOR 230V 2000/1000 W	RESISTANCE 230V 2000/1000 W
9	333104	HEATER 230V 5000W	CALEFACTOR 230V 5000W	RESISTANCE 230V 5000W
10	332569	HEATER 240V 2000/1000W	CALEFACTOR 240V 2000/1000W	RESISTANCE 240V 2000/1000W
11	333112	HEATER 240V 5000W	CALEFACTOR 240V 5000W	RESISTANCE 240V 5000W
12	121962	HEATER INLET LID	CIERRE ENTRADA CALEFACTOR *	FERMETURE ENTREE RESISTANCE
13	341891	HEATING AUX.ELEC.INST. (FOR MOD. INTELI CONTROL)	INST. ELEC. AUX. CALEFACCION (PARA MOD. INTELI CONTROL)	INST.ELEC.AUX.CHAUFFAGE (POUR MOD. INTELI CONTROL)
14	341966	HEATING RELAY ELEC.INST. (FOR MOD. LOGI/COIN CONTROL)	INST. ELEC. RELE CALEFACCION (PARA MOD. LOGI/COIN CONTROL)	INST.ELEC.RELAIS CHAUFFAGE (POUR MOD. LOGI/COIN CONTROL)
15	183400	PLATE SCREW ST-4, 20 P.F. C/AL.T25	TORNILLO CHAPA ST-4 (ESPECIAL)*	VIS PLAQUE ST-4, 20 P.F. C/AL.T25

info@zipnasklade.ru
8(800)500-69-51

Nº	REF	DENOMINATION	DENOMINACIÓN	DENOMINATION
16	146183	BICR CYL SCREW DIN 84 M-4X25	TOR.CIL.DIN84-4.8 B.TRI.M 4X25	VIS CYL BICR DIN 84 M-4X25
17	146266	BICR.HEX SCREW DIN933-8 M-4X15	TOR.EX.DIN933-4.8 B.TRI.M 4X15	VIS HEX BICR.DIN933-8.8 M-4X15
18	146282	BICR.HEX SCREW DIN933-8 M 5X15	TOR.EX.DIN933-8.8 B.TRI.M 5X15	VIS HEX BICR.DIN933-8.8 M 5X15
19	132043	SELF-LOCKING NUT DIN985-8 B.TRI.M 4	TUER.AUTOBL.DIN985-8 B.TRI.M 4	ECROU AUTOBLOCANT DIN985-8 B.TRI.M 4
20	176826	SELF-LOCKING NUT DIN985-8 B.TRI.M5	TUER.AUTOBL.DIN985-8 B.TRI.M5	ECROU AUTOBLOCANT DIN 985-8 B.TRI.M5

info@zipnasklade.ru
8(800)500-69-51

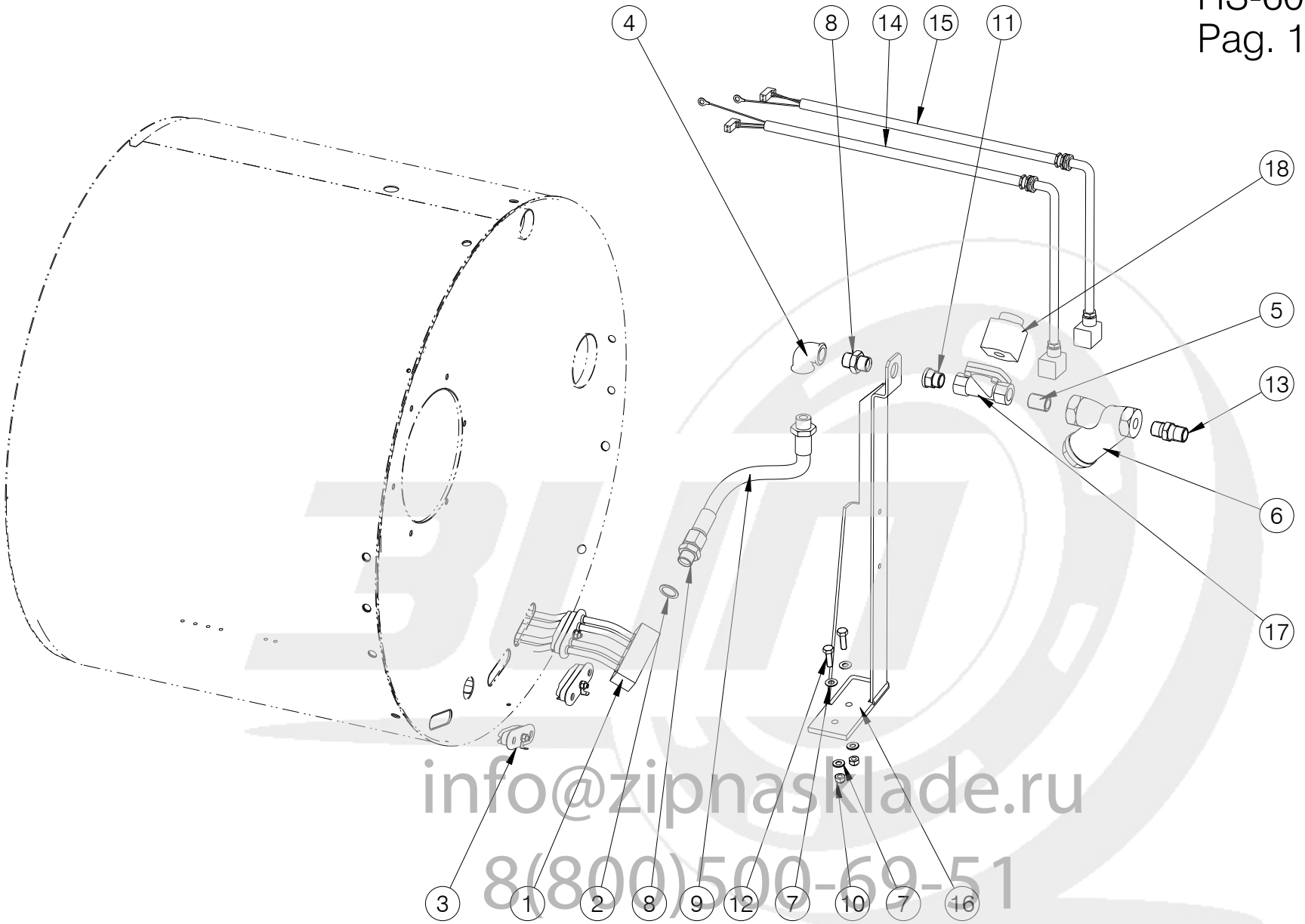

info@zipnasklade.ru
8(800)500-69-51

Nº	REF	DENOMINATION	DENOMINACIÓN	DENOMINATION
		STEAM HEATING KITS	KITS CALEFACCION VAPOR	KITS CHAUFFAGE VAPEUR
	796771	STEAM KIT H13-17 IC 50HZ	KIT CAL.VAPOR H13-17 IC 50 HZ	KIT CHAUF.VAP.H13-17 IC 50HZ
	796763	STEAM KIT H13-17 IC 60HZ	KIT CAL.VAPOR H13-17 IC 60 HZ	KIT CHAUF.VAP.H13-17 IC 60HZ
	796797	STEAM KIT H13-17 CC-LC 50HZ	KIT CAL.VAPOR H13-17 CC-LC50HZ	KIT CHAUF.VAP.H13-17 CC-LC 50H
	796789	STEAM KIT H13-17 CC-LC 60HZ	KIT CAL.VAPOR H13-17 CC-LC60HZ .	KIT CHAUF.VAP.H13-17 CC-LC 60H
1	108431	STEAM DISTRIBUTOR	DISTRIBUIDOR VAPOR	DISTRIBUTEUR VAPEUR
2	109777	COPPER GASKET 1/2"	12504 JUNTA COBRE 1/2"	JOINT CUIVRE 1/2"
3	121962	HEATER INLET LID	CIERRE ENTRADA CALEFACTOR *	FERMETURE ENTREE RESISTANCE
4	129445	FIG. 90 1/2" GALV.	FIGURA 90 DE 1/2" GALV.	FIG. 90 1/2" GALV.
5	129999	FIG. 531 1/2" GALV	FIGURA 531 DE 1/2" GALV.	FIG. 531 1/2" GALV
6	133728	STRAINER THREADED 1/2" O'3 PN16	FILTRO GG25 ROSC.1/2" PN16 0'3MM INOX	FILTRE FILETE 1/2" 0,3 PN16
7	149518	BICR.WASHER B DIN125-ST 8,4	ARAN.B DIN125-ST B.TRI. 8,4	RONDELLE.B DIN125-ST BICR.8,4
8	156216	JOINTING SCREW 10903 1/2"	10903 TORNILLO UNION MM1/2"	VIS UNION 10903 1/2"
9	162305	STEAM INLET JOINTING	UNION ENTRADA VAPOR	UNION ENTREE VAPEUR
10	164285	SELF-LOCKING NUT DIN985-8 B.TRI.M8	TUER.AUTOBL.DIN985-8 B.TRI.M8	ECROU AUTOBLOCANT DIN985-8 B.TRI.M8
11	183525	MALE-FEMALE SLEEVE 1/2"	MANGUITO MACHO-HEMBRA1/2"LATON	FRETTE MALE-FEMELLE 1/2"
12	192849	BIC.HEX SCREW DIN933-8 M-8X25	TOR.EX.DIN933-8.8 B.TRI.M 8X25	VIS HEX.DIN933-8,8 BICR.M-8X25
13	251355	STEAM INLET SLEEVE	MANGUITO ENTRADA VAPOR	MANCHON ENTREE VAPEUR
14	341909	STEAM ELEC.INST. (FOR MOD.INTELI CTRL STEAM)	INST. ELEC. VAPOR (PARA MOD.INTELI CTRL A VAPOR)	INST.ELEC.VAPEUR (POUR MOD.INTELI CTRL A VAPEUR
15	341917	STEAM ELEC.INST. (MOD.LOGI/COIN CTRL STEAM)	INST. ELEC. VAPOR (MOD.LOGI/COIN CTRL A VAPOR)	INST.ELEC.VAPEUR (MOD.LOGI/COIN CTRL A VAPEUR)
16	423137	STEAM INLET BRACKET	SOPORTE ENTRADA VAPOR	SUPPORT ENTREE VAPEUR
17	583369	STEAM VALVE BODY 1/2"	CUERPO VALV. VAPOR 1/2" *	CORPS VANNE VAPEUR 1/2"
18	583385	STEAM VALVE COIL 208-240V 50/60Hz	BOBINA V.VAPOR 208-240V 50/60Hz *	BOBINE V. VAPEUR 208-240V 50/60Hz

info@zipnasklade.ru
8(800)500-69-51

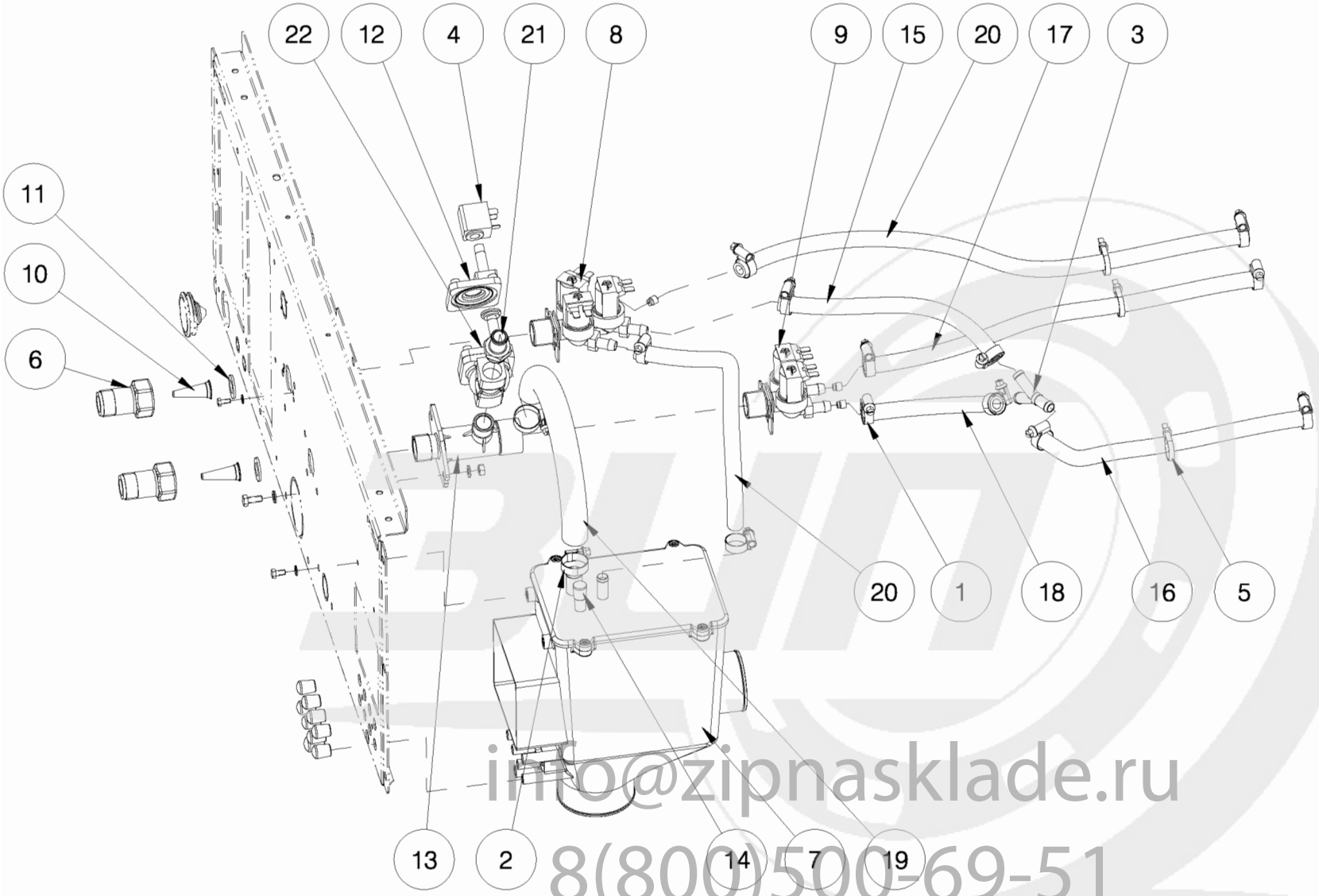

info@zipnasklade.ru
8(800)500-69-51

Nº	REF	DENOMINATION	DENOMINACIÓN	DENOMINATION
1	155150	HOSE CLIP ASFA-L W2 8-16	ABRAZADERA ASFA-L W2 8-16	COLLIER ASFA-L W2 8-16
2	156109	CLAMP 16-27	ABRAZADERA 16- 27 *	BRIDE 16-27
3	152165	BRANCH	BIFURCACION	BIFURCATION
4	333716	COIL AB 5W 12V CC 042N0806	BOBINA AB 5W 12V CC 042N0806	BOBINE AB 5W 12V CC 042N0806
5	140525	CLAMP 2244-0	BRIDA UNEX 2244-0 *	BRIDE 2244-0
6	315309	FILTER BODY	CUERPO FILTRO	CORPS FILTRE
7	339689	DISTRIBUTOR	DISTRIBUIDOR	DISTRIBUTEUR
8	511022	THREE TRACK ELECTROVALVE	ELECTROVALVULA TRES VIAS	ELECTROVANNE TROIS VOIES
	510933	REGULATOR 4 L/MIN.RED	REGULADOR DE 4L/MIN.ROJO CLARO	REGULATEUR 4 L/MIN ROUGE
	300194	YELLOW CASE 30053	ESTUCHE AMARILLO 30053	BOITE JAUNE 30053
	300202	INTEGRAL GUIDE-MEMBRANE 30696	MEMBRANA-GUIA INTEGRAL 30696 *	MEMBRANE-GUIDE INTEGRALE 30696
	332296	COIL 255043000000 12VCC	BOBINA 255043000000 12VCC	BOBINE 255043000000 12VCC
9	521294	DOUBLE ELECTROVALVE	ELECTROVALVULA DOS VIAS	ELECTROVANNE DOUBLE
	156257	REGULATOR 8 L/MIN (RED)	REGULADOR DE 8 L/MIN. (ROJO)	REGULATEUR 8 L/MIN (ROUGE)
	156265	REGULATOR 3 L/MIN (BLACK)	REGULADOR DE 3 L/MIN. (NEGRO)	REGULATEUR 3 L/MIN (NOIR)
	300194	YELLOW CASE 30053	ESTUCHE AMARILLO 30053	BOITE JAUNE 30053
	300202	INTEGRAL GUIDE-MEMBRANE 30696	MEMBRANA-GUIA INTEGRAL 30696 *	MEMBRANE-GUIDE INTEGRALE 30696
	332296	COIL 255043000000 12VCC	BOBINA 255043000000 12VCC	BOBINE 255043000000 12VCC
10	315614	CONICAL FILTER REF.4008-2-1	FILTRO CONICO REF.4008-2-1	FILTRE CONIQUE REF.4008-2-1
11	114348	GASKET D24XD13,5X2	JUNTA MIFLEX D24X13, 5X2 EPDM WRC 400105	JOINT D24XD13,5X2
12	341685	SPARE-PARTS KIT EV220A 12-14B	KIT REPUES.EV220A 12-14B *	KIT RECHANGES EV220A 12-14B
13	333682	ELECTROVALVE BRACKET	SOPORTE ELECTROVALVULAS	SUPPORT ELECTROVANNES
14	156679	CONICAL END-PIECE R-16 D10	TOPE CONICO REPRIMSA R-16 D10	BOUCHON CONIQUE R-16 D10
15	410613	WATER INLET HOSE	TUBO ENTRADA AGUA	TUBE ENTRÉE EAU
16	410621	WATER INLET HOSE	TUBO ENTRADA AGUA	TUYAU ENTRÉE EAU
17	411389	WATER INLET HOSE	TUBO ENTRADA AGUA	TUBE ENTREE EAU
18	427187	WATER INLET HOSE	TUBO ENTRADA AGUA	TUBE ENTREE EAU
19	427211	WATER INLET HOSE	TUBO ENTRADA AGUA	TUBE ENTREE EAU

info@zipnasklade.ru
8(800)500-69-51

Nº	REF	DENOMINATION	DENOMINACIÓN	DENOMINATION
20	430934	WATER INLET HOSE	TUBO ENTRADA AGUA	TUBE ENTREE EAU
21	333690	FIG. 243 MI 1/2" BRASS	FIGURA 243 MI DE 1/2" LATON	FIG. 243 MI 1/2" LAITON
22	333708	VALVE EV220A G12 042U4022	CUERPO VAL.EV220A G12 042U4022	VANNE EV220A G12 042U4022

info@zipnasklade.ru
8(800)500-69-51

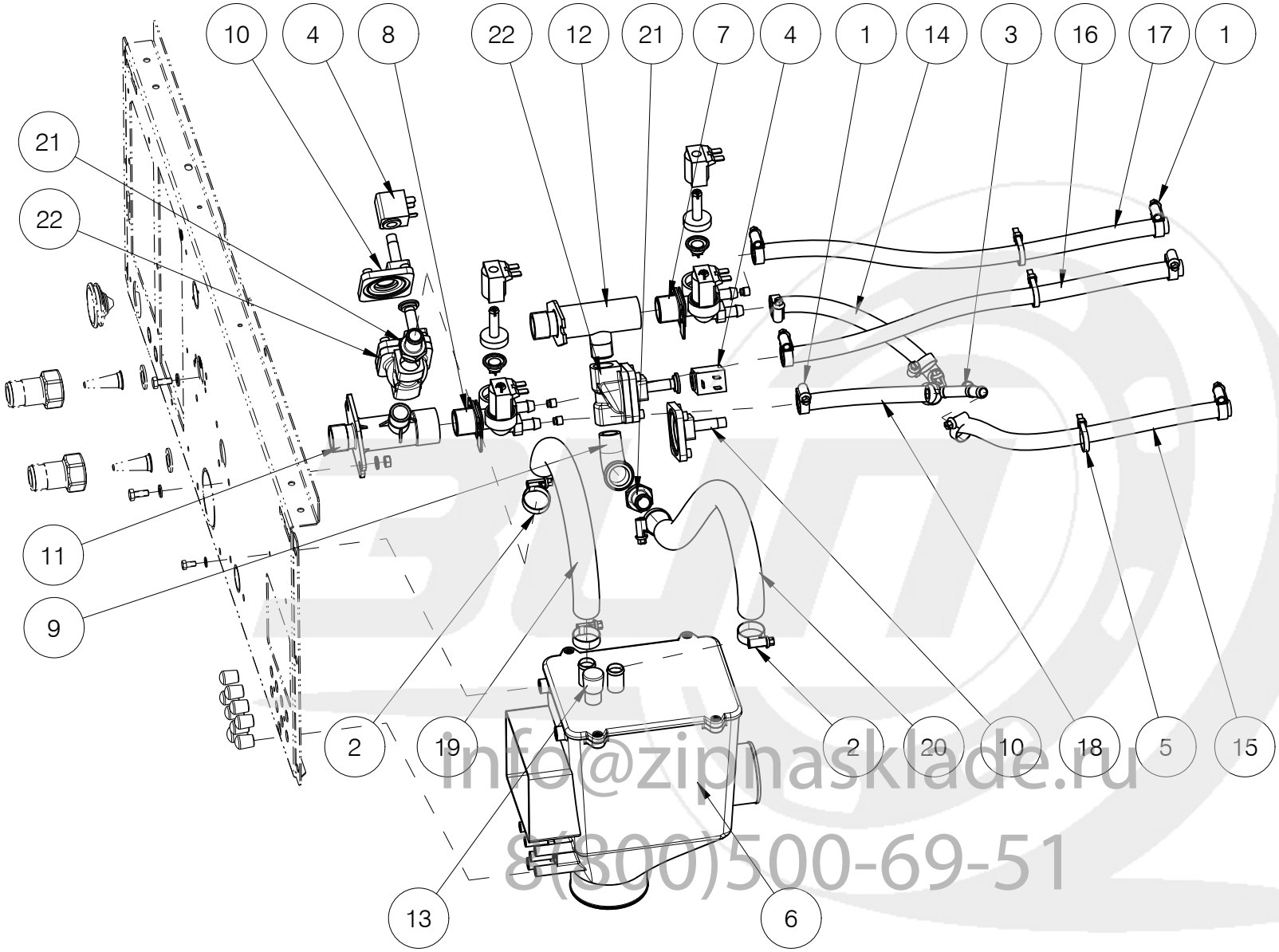

info@zipnasklade.ru
8(800)500-69-51

Nº	REF	DENOMINATION	DENOMINACIÓN	DENOMINATION
1	155150	HOSE CLIP ASFA-L W2 8-16	ABRAZADERA ASFA-L W2 8-16	COLLIER ASFA-L W2 8-16
2	156109	CLAMP 16-27	ABRAZADERA 16- 27 *	BRIDE 16-27
3	152165	BRANCH	BIFURCACION	BIFURCATION
4	333716	COIL AB 5W 12V CC 042N0806	BOBINA AB 5W 12V CC 042N0806	BOBINE AB 5W 12V CC 042N0806
5	140525	CLAMP 2244-0	BRIDA UNEX 2244-0 *	BRIDE 2244-0
6	333658	DISTRIBUTOR	DISTRIBUIDOR	DISTRIBUTEUR
7	511089	DOUBLE ELECTROVALVE	ELECTROVALVULA DOS VIAS	ELECTROVANNE DOUBLE
	510933	REGULATOR 4 L/MIN.RED	REGULADOR DE 4L/MIN.ROJO CLARO	REGULATEUR 4 L/MIN ROUGE
	300194	YELLOW CASE 30053	ESTUCHE AMARILLO 30053	BOITE JAUNE 30053
	300202	INTEGRAL GUIDE-MEMBRANE 30696	MEMBRANA-GUIA INTEGRAL 30696 *	MEMBRANE-GUIDE INTEGRALE 30696
	332296	COIL 255043000000 12VCC	BOBINA 255043000000 12VCC	BOBINE 255043000000 12VCC
8	521294	DOUBLE ELECTROVALVE	ELECTROVALVULA DOS VIAS	ELECTROVANNE DOUBLE
	156257	REGULATOR 8 L/MIN (RED)	REGULADOR DE 8 L/MIN. (ROJO)	REGULATEUR 8 L/MIN (ROUGE)
	156265	REGULATOR 3 L/MIN (BLACK)	REGULADOR DE 3 L/MIN. (NEGRO)	REGULATEUR 3 L/MIN (NOIR)
	300194	YELLOW CASE 30053	ESTUCHE AMARILLO 30053	BOITE JAUNE 30053
	300202	INTEGRAL GUIDE-MEMBRANE 30696	MEMBRANA-GUIA INTEGRAL 30696 *	MEMBRANE-GUIDE INTEGRALE 30696
	332296	COIL 255043000000 12VCC	BOBINA 255043000000 12VCC	BOBINE 255043000000 12VCC
9	129494	ELBOW FIG 92 1/2" GALV	FIGURA 92 DE 1/2"AMAT GALV.	COUDE FIG 92 1/2" GALV
10	341685	SPARE-PARTS KIT EV220A 12-14B	KIT REPUES.EV220A 12-14B *	KIT RECHANGES EV220A 12-14B
11	333682	ELECTROVALVE BRACKET	SOPORTE ELECTROVALVULAS	SUPPORT ELECTROVANNES
12	552133	ELECTROVALVE BRACKET	SOPORTE ELECTROVALVULAS	SUPPORT ELECTROVANNES
13	156687	CONICAL END-PIECE R-16 D16	TOPE CONICO REPRIMSA R-16 D16	ARRET CONIQUE R-16 D16
14	410613	WATER INLET HOSE	TUBO ENTRADA AGUA	TUBE ENTRÉE EAU
15	410621	WATER INLET HOSE	TUBO ENTRADA AGUA	TUYAU ENTRÉE EAU
16	411389	WATER INLET HOSE	TUBO ENTRADA AGUA	TUBE ENTREE EAU
17	411397	WATER INLET HOSE	TUBO ENTRADA AGUA	TUBE ENTREE EAU
18	427187	WATER INLET HOSE	TUBO ENTRADA AGUA	TUBE ENTREE EAU
19	427211	WATER INLET HOSE	TUBO ENTRADA AGUA	TUBE ENTREE EAU

info@zipnasklade.ru
8(800)500-69-51

Nº	REF	DENOMINATION	DENOMINACIÓN	DENOMINATION
20	427229	WATER INLET HOSE	TUBO ENTRADA AGUA	TUBE ENTREE EAU
21	333690	FIG. 243 MI 1/2" BRASS	FIGURA 243 MI DE 1/2" LATON	FIG. 243 MI 1/2" LAITON
22	333708	VALVE EV220A G12 042U4022	CUERPO VAL.EV220A G12 042U4022	VANNE EV220A G12 042U4022

info@zipnasklade.ru
8(800)500-69-51