Mod.	From serial no. A partir máq. nº
HS-6013	2.116.867
EH030	1.462.460

Parts Handbook for Washers
Manual de Recambios para lavadoras
Notice Vues Eclatées pour laveuses

HS-6013
EH030

GIRBAU, S.A.
Crta de Manlleu, km. 1
08500 VIC (Barcelona) • SPAIN
Tel. 34 93 8861100
Fax 34 93 8860785
girbau@girbau.es
www.girbau.com

info@zipnasklade.ru
8(800)500-69-51

USA, CANADA:

CONTINENTAL GIRBAU Inc.
2500 State Road 44
WI 54904 Oshkosh • USA
Tel. 1(920) 231-8222
Fax 1(920) 231-4666
info@cont-girbau.com
www.cont-girbau.com

Parts Handbook
Manual de recambios
Vues Eclatées

HS-6013
EH030

Cod. 433623
ALT09
Rev. 03/0817

NOTES TO USE PARTS LIST

Sheets no. 1,2,3,4,5,6,12,16:
Are common for all versions.

Sheets no. 7, 13:
Logi Control

Sheets no. 7, 14:
Coin Control

Sheets no. 8, 15:
Inteli Control

Sheet no. 9:
Logi Control & Coin Control with high temperature valve

Sheet no. 10:
Inteli Control with high temperature valve

Sheet no. 11:
Inteli Control with third water inlet

Sheet no. 17:
Electric heating

Sheet no. 18:
Steam heating

Sheet no. 19:
EH030 Coin Control

Sheet no. 20
EH030 Coin Control with high temperature valve

ACLARACIONES PARA EL USO DEL MANUAL DE RECAMBIOS

Hojas nº 1,2,3,4,5,6,12 y 16:
Son comunes a todas las variantes.

Hojas nº 7 y 13:
Logi Control

Hojas nº 7 y 14::
Coin Control

Hojas nº 8 y 15:
Inteli Control

Hoja nº 9:
Logi Control y Coin Control con válvula alta temperatura

Hoja nº 10:
Inteli Control con válvula alta temperatura

Hoja nº 11:
Inteli Control con tercera entrada de agua

Hoja nº 17:
Calefacción eléctrica

Hoja nº 18
Calefacción a vapor

Hoja nº 19:
EH030 Coin Control

Hoja nº 20:
EH030 Coin Control con válvula alta temperatura

NOTES UTILISATION VUES ECLATEES

Feuilles no.1,2,3,4,5,6,12 et 16: Sont communes à toutes les versions.

Feuilles no. 7 et 13:
Logi Control

Feuilles no. 7 et 14:
Coin Control

Feuilles no. 8 et 15:
Inteli Control

Feuille no. 9:
Logi Control et Coin Control avec vanne haute temperature

Feuille no. 10:
Inteli Control avec vanne haute température

Feuille no. 11:
Inteli Control avec troisième arrivée d'eau

Feuille no. 17:
Chauffage électrique

Feuille no. 18:
Chauffage à vapeur

Feuille no. 19:
EH030 Coin Control

Feuille no. 20:
EH030 Coin Control avec vanne haute température

info@zipnasklade.ru
8(800)500-69-51

VERY IMPORTANT:
Before ordering parts be sure they have not been modified. Check it on modification sheet, after the corresponding sheet.

MUY IMPORTANTE:
Al pedir una pieza cerciorarse antes de que la misma no ha sido modificada. Si lo hubiese sido, estaría situada como hoja de modificaciones, detrás de la hoja correspondiente.

TRES IMPORTANT:
Avant de commander une pièce, s'assurer qu'elle n'a pas été modifiée. Le vérifier sur feuille de modifications, derrière la feuille correspondante.

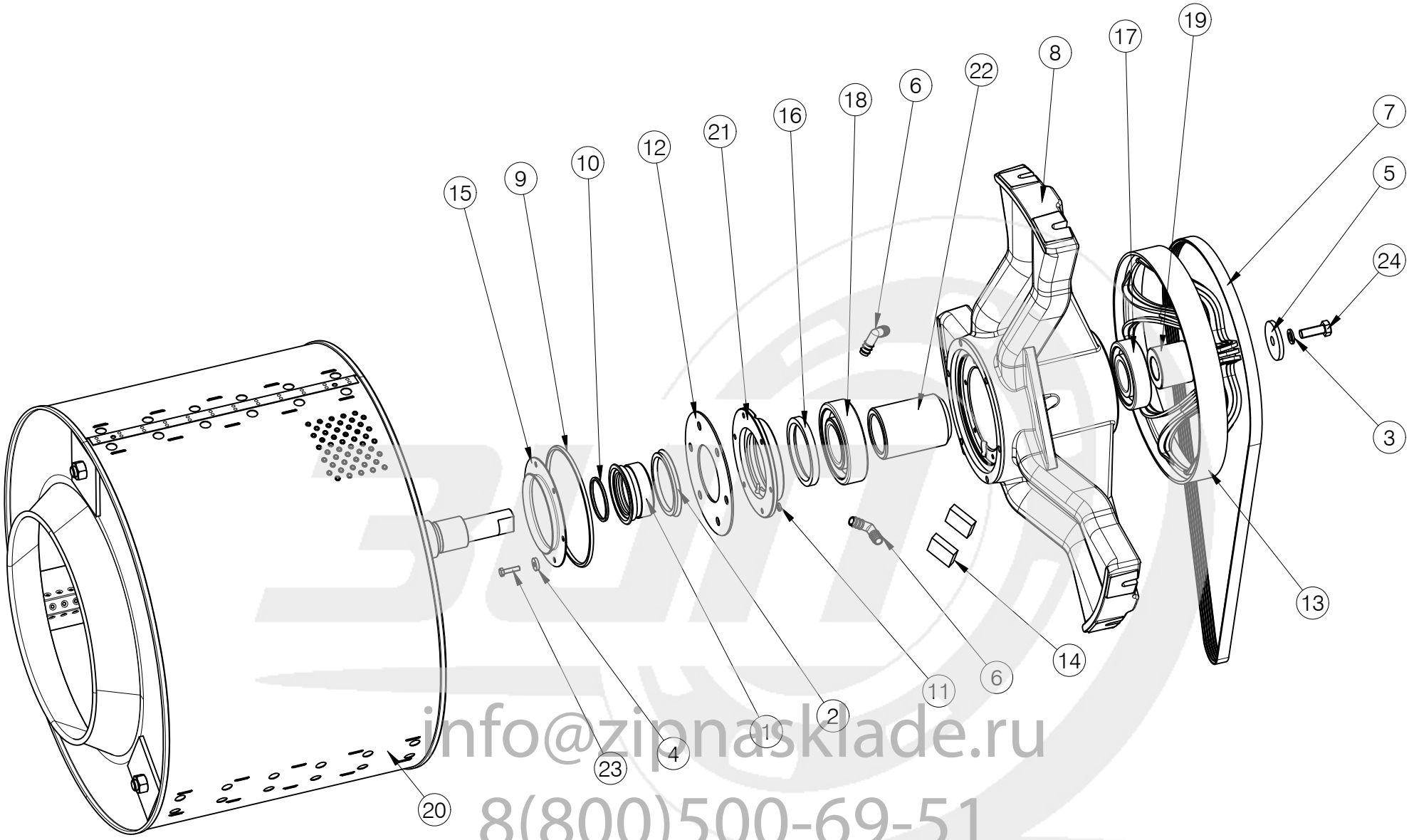

info@zipnasklade.ru
8(800)500-69-51

Nº	REF	DENOMINATION	DENOMINACIÓN	DENOMINATION
1	428250	SEAL RING	ANILLO RETENES	BAGUE RESERVES
2	343723	RING V-RING V-80A VITON	ANILLO V-RING V-80A VITON	BAGUE V-RING V-80A VITON
3	149823	GROWER WASHER A12 DIN127 BICR.	ARAN.GROWER A12 DIN127 B.TRI.	RONDELLE GROWER A12 DIN127
4	422220	WASHER D18XD6.5X4	ARANDELA 18X6.5X4 INOX	RONDELLE D18XD6.5X4
5	238048	WASHER D57XD13X6	ARANDELA 57X13X6 TRIVALEN.	RONDELLE D57XD13X6
6	193904	HOSE ELBOW 3/8" RE. 46602	CODO MANGUERA 3/8" REF.46602	COUDE TUYAU 3/8" REF. 46602
7	342444	RIBBED BELT 5PK1675	CORREA ESTR.5PK1675±6	COURROIE STRIE 5PK1675
8	427203	BEARING BOX	ESTRELLA CAJA COJINETES	BOITE ROULEMENTS
9	340927	TORIC GASKET 166X178X6 NBR	JUNTA TORICA 166X178X6 NBR	JOINT TORIQUE 166X178X6 NBR
10	340935	TORIC GASKET 57X65X4 NBR70	JUNTA TORICA 57X65X4 NBR70	JOINT TORIQUE 57X65X4 NBR70
11	181321	TORIC GASKET 6X12X3	JUNTA TORICA 6X12X3	JOINT TORIQUE 6X12X3
12	428276	PLATE V-RING	PLATINA V-RING	PLATINE V-RING
13	318121	DRUM PULLEY	POLEA TAMBOR	POULIE TAMBOUR
14	431205	PRESSOSTAT HOSE PROTECTION	PROTECCION TUBO PRESOSTATO	PROTECTION TUBE PRESSOSTAT
15	428284	PROTECTIOM V-RING	PROTECCION V-RING	PROTECTION V-RING
16	121897	SEAL 78X100X10 BA	RETEN 78X100X10 DIN 3760-A NBR	RESERVE 78X100X10 BA
17	128686	BEARING 6309 ZZ	RODAMIENTO 6309 ZZ	ROULEMENT 6309 ZZ
18	340901	BEARING 6311-C-2HRS	RODAMIENTO 6311-C-2HRS	ROULEMENT 6311-C-2HRS
19	340844	DRUM PULLEY SPACER	SEPARADOR POLEA TAMBOR	SEPARATEUR POULIE TAMBOUR
20	444422	BASKET	TAMBOR	TAMBOUR
21	428268	SEAL-HOLDER COVER	TAPA PORTA-RETEN	COUVERCLE PORTE-RESERVE
22	340836	BEARING END-PIECE	TOPE COJINETES	ARRET ROULEMENTS
23	144915	INOX HEX SCREW DIN933 M 6X25	TOR.EX.DIN933INOX A2-70 M 6X25	VIS HEX INOX DIN933 M 6X25
24	176883	BIC.HEX SCREW DIN933-8 M12X35	TOR.EX.DIN933-8.8 B.TRI.M12X35	VIS HEX DIN933-8,8 BICR.M12X35

info@zipnasklade.ru
8(800)500-69-51

HS-6013
Pag. 2

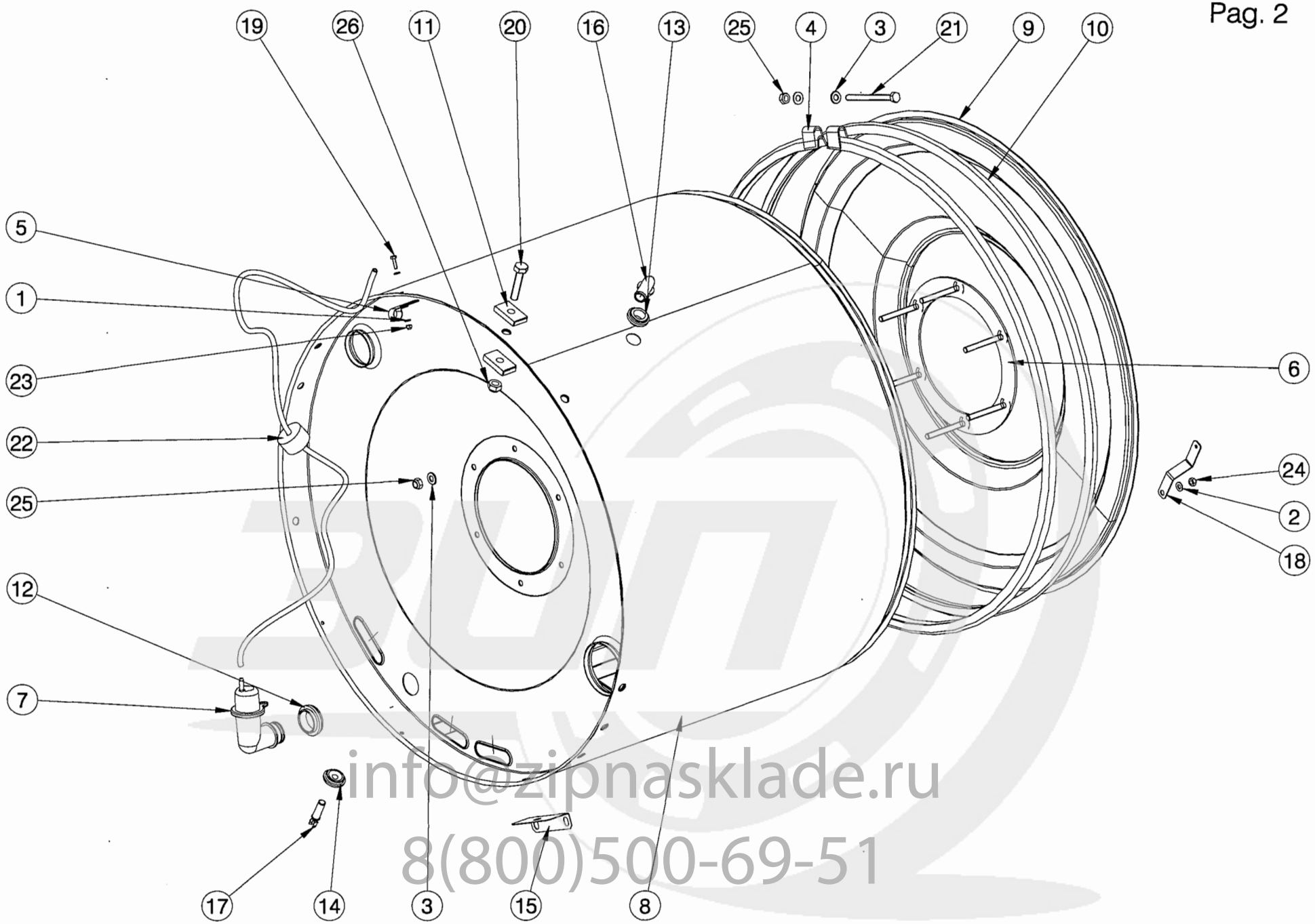

info@zipnasklade.ru
8(800)500-69-51

Nº	REF	DENOMINATION	DENOMINACIÓN	DENOMINATION
1	149476	BICR.WASHER B DIN125-ST 4,3	ARAN.B DIN125-ST B.TRI. 4,3	RONDELLE B DIN125-ST BICR.4,3
2	149526	BICR.WASHER B DIN125-ST 6,4	ARAN.B DIN125-ST B.TRI. 6,4	RONDELLE B DIN125-ST BICR.6,4
3	149518	BICR.WASHER B DIN125-ST 8,4	ARAN.B DIN125-ST B.TRI. 8,4	RONDELLE.B DIN125-ST BICR.8,4
4	430298	OUTER-DRUM FIXING RING	ARO FIJACION ENVOLVENTE	BAGUE FIXATION CUVE
5	140418	CLAMP UNEX REF 1201	BRIDA UNEX 1201	BRIDE UNEX REF 1201
6	431577	OUTER-DRUM PLATE SET	CONJUNTO PLATINA ENVOLVENTE	ENSEMBLE PLATINE CUVE
7	320382	PRESSURE TRANSMITT INTAKE BODY	CUERPO TOMA PRESOSTATO	CORPS PRISE PRESSOSTAT
8	428482	OUTER	ENVOLVENTE	CUVE
9	549220	OUTER DRUM FRONT PANEL	FRONTAL ENVOLVENTE	FRONTAL CUVE
10	340638	HOUSING OUTER-DRUM FRONT	JUNTA FRONTAL ENVOLVENTE	JOINT FRONTAL CUVE
11	422329	HANDRAIL 43X25X8	PASAMANO 43X25X8	PASSEMAIN 43X25X8
12	320036	PRESSURE T.BODY SHEATH-LODGING	PASAMUROS CUERPO PRESOSTATO	LOGEMENT CORPS PRESSOSTAT
13	338863	VAPOR OUTLET SHEATH-LODGING	PASAMUROS DESVAPORIZADOR	LOGEMENT SORTIE CONDENSATS
14	256149	SENSOR SHEATH LODGING	PASAMUROS SENSOR	LOGEMENT SENSEUR
15	341073	OUTER DRUM PIECE	POSICIONADOR ENVOLVENTE	PIECE CUVE
16	338871	VAPOR OUTLET RACCORD	RACOR DESVAPORIZADOR	RACCORD SORTIE CONDENSATS
17	193862	NTC RESISTANCE	RESISTENCIA NTC	RESISTANCE NTC
18	431536	LOCK INSTALLATION FIXING-PIECE	SUJECION INSTALACION CIERRE	FIXATION INST.FERMETURE
19	146266	BICR.HEX SCREW DIN933-8 M-4X15	TOR.EX.DIN933-4.8 B.TRI.M 4X15	VIS HEX BICR.DIN933-8.8 M-4X15
20	186528	HEX SCREW DIN 933 8,8 M10x50 TRIVALENT	TORNILLO HEXAGONAL DIN 933 8,8 M10x50 TR	VIS HEXAGONALE DIN 933 8,8 M10x50 TRIVAL
21	146464	BICR.HEX SCREW DIN933-8 M8X100	TOR.EX.DIN933-8.8 B.TRI.M8X100	VIS HEX BICR.DIN933-8 M 8X100
22	428672	PRESSURE TRANSMITTER HOSE	TUBO TRANSMISOR PRESION	TUYAU PRESSOSTAT
23	132043	SELF-LOCKING NUT DIN985-8 B.TRI.M 4	TUER.AUTOBL.DIN985-8 B.TRI.M 4	ECROU AUTOBLOCANT DIN985-8 B.TRI.M 4
24	176834	SELF-LOCKING NUT DIN985-8 B.TRI.M6	TUER.AUTOBL.DIN985-8 B.TRI.M6	ECROU AUTOBLOCANT DIN985-8 B.TRI.M6
25	164285	SELF-LOCKING NUT DIN985-8 B.TRI.M8	TUER.AUTOBL.DIN985-8 B.TRI.M8	ECROU AUTOBLOCANT DIN985-8 B.TRI.M8
26	150649	SELF-LOCKING NUT DIN985-8 B.TRI.M10	TUER.AUTOB.DIN985-8 B.TRI.M10	ECROU AUTOBLOCANT DIN985-8 B.TRI.M10

info@zipnasklade.ru
8(800)500-69-51

HS-6013
Pag. 3

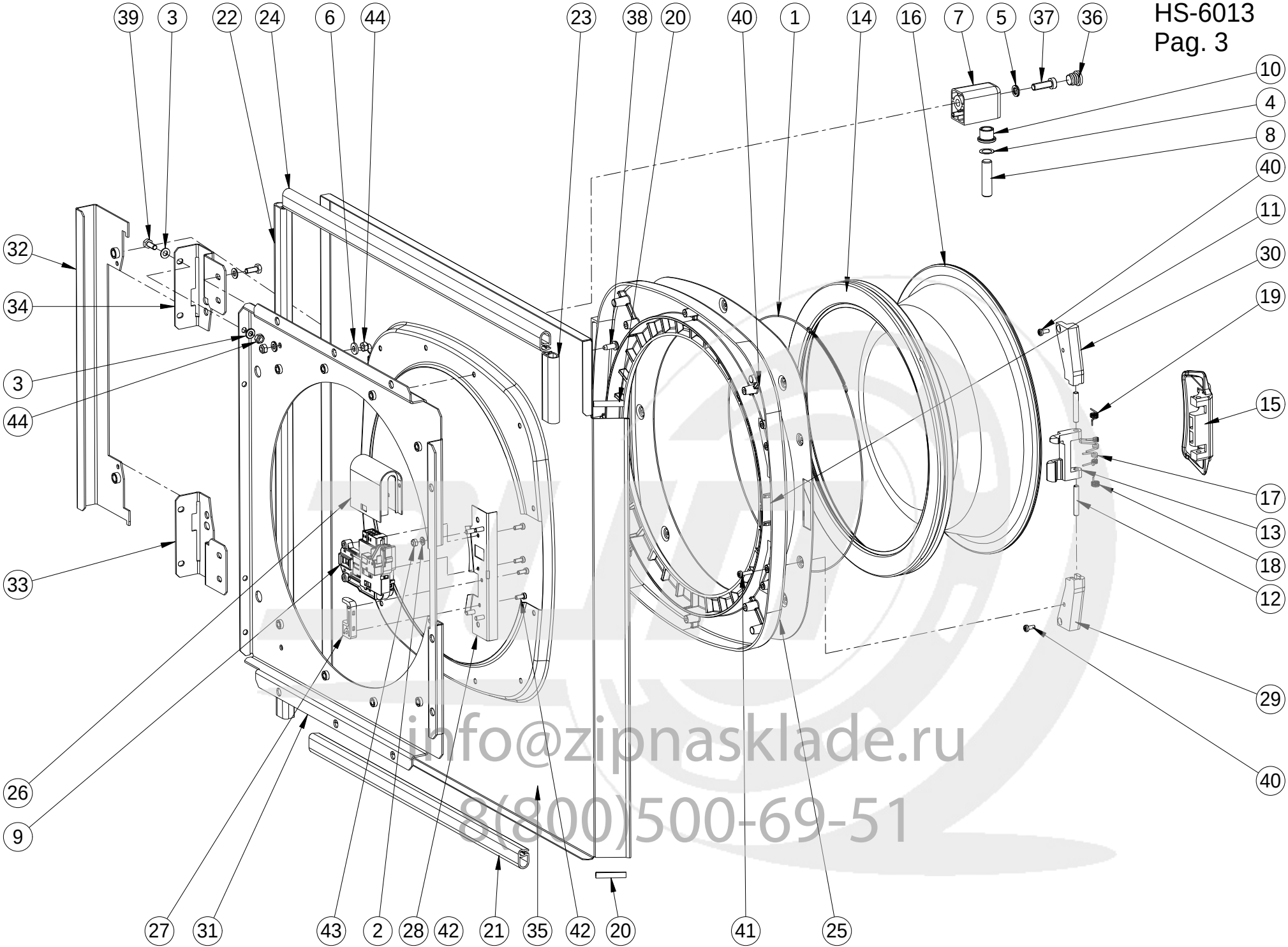

info@zipnasklade.ru
8(800)500-69-51

Nº	REF	DENOMINATION	DENOMINACIÓN	DENOMINATION
1	343137	WASHER D318XD1,5 SPRING	ABRAZ.ALAMBRE D318XD1,5 MUELLE	RONDELLE D318XD1,5 RESSORT
2	149534	BICR.WASHER B DIN125-ST 5,3	ARAN.B DIN125-ST BICR. 5,3	RONDELLE B BICR.DIN125-ST 5,3
3	149526	BICR.WASHER B DIN125-ST 6,4	ARAN.B DIN125-ST B.TRI. 6,4	RONDELLE B DIN125-ST BICR.6,4
4	184200	ADJ. WASHER PS12X18X0,2	ARAN.AJUSTE PS12X18X0,2 DIN988	RONDELLE REGLAGE PS12X18X0,2
5	540039	NORD-LOCK WASHER NL 8 D.PROT.	ARAN.NORD-LOCK NL 8 D.PROT.	RONDELLE NORD-LOCK NL 8 D.PROT.
6	432872	WASHER 14X6.4X2	ARANDELA 14X6.4X2 INOX	RONDELLE 14X6.4X2
7	432054	HINGE	BISAGRA	CHARNIERE
8	261156	DOOR BOLT	BULON ESCOTILLA	BOULON HUBLOT
9	333302	LOCKING BITRON BP P/5 DL-S1	CIERRE BITRON BP P/5 DL-S1 *	FERMETURE BITRON BP P/5 DL-S1
10	128827	SELFOIL SLEEVE B11B12-17-15/22	COJ. SELFOIL B11B12-17-15/22-3	FRETTE SELFOIL B11B12-17-15/22
11	432062	DOOR BODY	CUERPO ESCOTILLA	CORPS HUBLOT
12	427088	HANDLE SHAFT	EJE MANETA	AXE POIGNEE
13	339614	LOCK HOOK	GANCHO CIERRE	CROCHET FERMETURE
14	563353	DOOR GASKET 65SHA	JUNTA ESCOTILLA 65SHA	JOINT DE HUBLOT 65SHA
	359810	DOOR GASKET 70SHA (SPARE PARTS ONLY)	JUNTA ESCOTILLA 70SHA (SOLO RECAMBIOS)	JUNTA ESCOTILLA 70SHA (SEULEMENT PIECES DETACHEES)
15	339457	LOCK HANDLE	MANETA CIERRE	POIGNEE FERMETURE
16	340547	SPYHOLE	MIRILLA	VITRE
17	350462	HOOK SPRING	MUELLE GANCHO	RESSORT CROCHET
18	339978	HANDLE SPRING	MUELLE MANETA	RESSORT POIGNEE
19	339986	HANDLE SPRING	MUELLE MANETA	RESSORT POIGNEE
20	165472	ETHILENE-PROP. PROFILE	PERFIL ETILENO-PROP.REF.44117L	PROFILE ETHILENE-PROP.
21	428573	LOWER COVER AND PANEL PROFILE	PERFIL PANEL Y TAPA INFERIOR	PROF.PANNEAU ET COUVERCLE INF.
22	431361	FRONT COVER PROFILE	PERFIL TAPA FRONTAL	PROFILE COUVERCLE FRONTALE
23	432724	SHORT FRONT COVERT PROFILE	PERFIL TAPA FRONTAL CORTO	PROFILE COUVERC.FRONTALE COURT
24	431478	LONG FRONT COVERT PROFILE	PERFIL TAPA FRONTAL LARGO	PROFILE COUVERC.FRONTALE LONG
25	587261	GLASS-HOLDER	PORTA-MIRILLA	PORTE-VITRE
26	333070	LOCKING PROTECTION	PROTECCION CIERRE	PROTECTION FERMETURE
27	430843	FRONT COVER REINFORT	REFUERZO TAPA FRONTAL	RENFORT COUVERCLE FRONTALE

info@zipnasklade.ru
8(800)500-69-51

Nº	REF	DENOMINATION	DENOMINACIÓN	DENOMINATION
28	549329	LOCK BRACKET	SOPORTE CIERRE	SUPPORT FERMETURE
29	409086	HANDLE BRACKET	SOPORTE MANETA	SUPPORT HUBLOT
30	409094	HANDLE BRACKET	SOPORTE MANETA	SUPPORT POIGNEE
31	549246	DOOR BRACKET	SOPORTE PUERTA	SUPPORT PORTE
32	549287	HINGE NUT BRACKET	SOPORTE TUERCAS BISAGRAS	SUPPORT ECROU CHARNIÈRE
33	549261	LOWER DOOR BRACKET SUPPLEMENT	SUPLEMENTO SOPORTE PUERTA INF.	SUPPLÉMENT SUPPORT PORTE INF.
34	549253	HIGHER DOOR BRACKET SUPPLEMENT	SUPLEMENTO SOPORTE PUERTA SUP.	SUPPLÉMENT SUPPORT PORTE SUP.
35	549303	FRONT COVER	TAPA FRONTAL	COUVERCLE FRONTALE
36	322974	PLUG KAPSTO GPN320GL18	TAPON KAPSTO GPN320GL18	BOUCHON KAPSTO GPN320GL18
37	316695	ALLEN SCREW DIN7984-8 M8X 25	TOR.ALLDIN7984-8.8B.TRI.M 8X25	VIS ALLEN DIN7984-8.8 B.M8X 25
38	333294	SCREW T25 AR.18ESTR.M 6X15 INOX	TORNILLO ALOM.T25 M 6X15 INOX(ESPECIA	VIS T25 AR.18ESTR.M 6X15 INOX
39	326116	SCREW 410TT85T 4X10 INOX	TORNILLO 410TT85T 4X10 INOX (ESPECIAL)	VIS 410TT85T 4X10 INOX
40	352724	SCREW 416TT85T 4X16 INOX	TORNILLO 416TT85T 4X16 INOX (ESPECIAL)	VIS 416TT85T 4X16 INOX
41	322990	SCREW 4510RFAT INOX 4.5X10	TORNILLO 4510RFAT INOX 4.5X10 (ESPECIAL)	VIS 4510RFAT INOX 4.5X10
42	146233	BICR.HEX SCREW DIN933-8 M6X15	TOR.EX.DIN933-8.8 B.TRI.M 6X15	VIS HEX DIN933-8.8 BICR.M6X15
43	176826	SELF-LOCKING NUT DIN985-8 B.TRI.M5	TUER.AUTOBL.DIN985-8 B.TRI.M5	ECROU AUTOBLOCANT DIN 985-8 B.TRI.M5
44	176834	SELF-LOCKING NUT DIN985-8 B.TRI.M6	TUER.AUTOBL.DIN985-8 B.TRI.M6	ECROU AUTOBLOCANT DIN985-8 B.TRI.M6
		WITHOUT ILLUSTRATION	SIN ILUSTRACION	SANS ILLUSTRATION
	431189	JOINT ADJUSTING RING	ARO AJUSTE JUNTA	BAGUE REGLAGE JOINT

info@zipnasklade.ru
8(800)500-69-51

HS-6013
Pag. 4

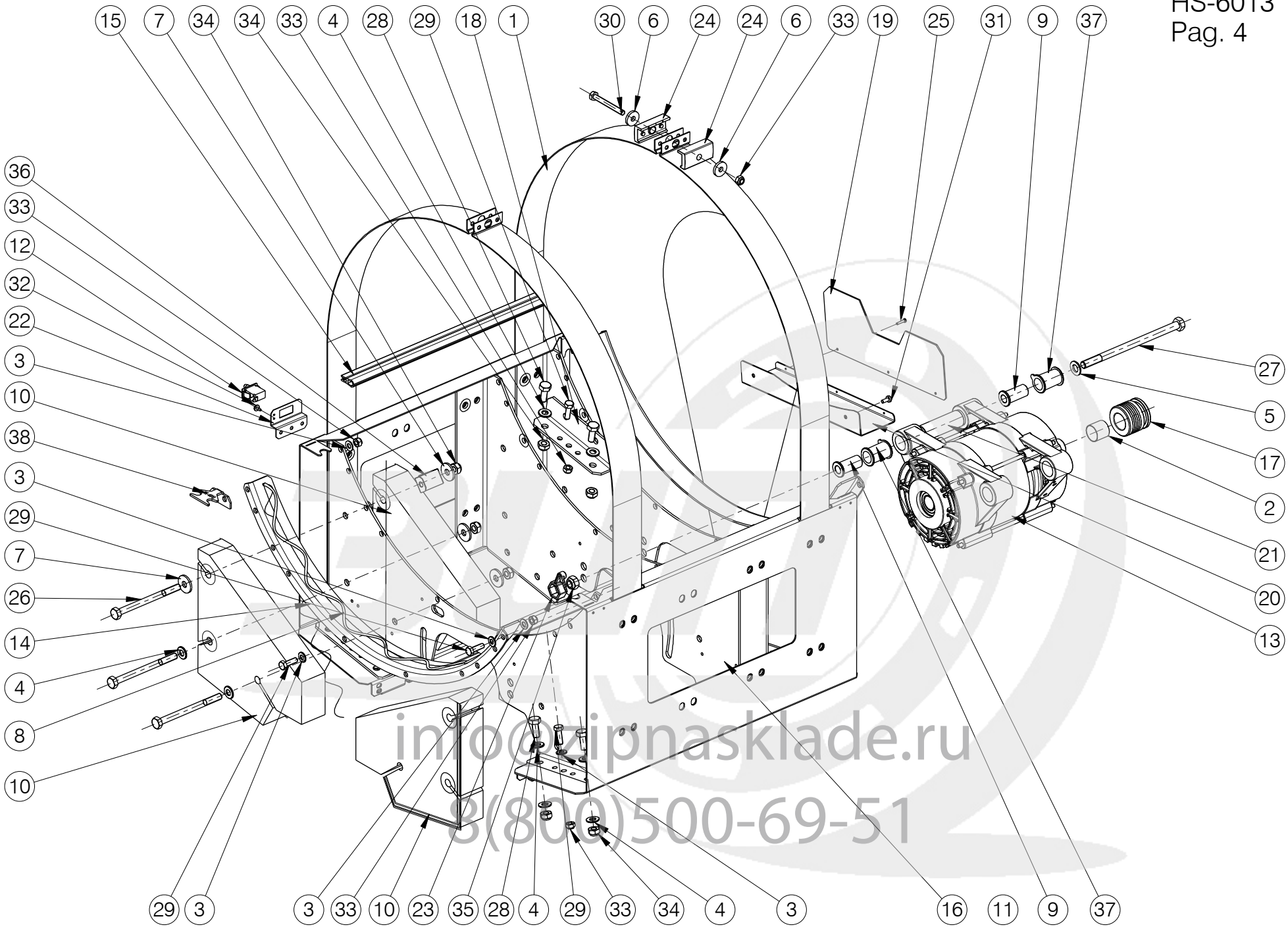

info@zipnasklade.ru
8(800)500-69-51

Nº	REF	DENOMINATION	DENOMINACIÓN	DENOMINATION
1	427807	OUTER-DRUM CLAMP	ABRAZADERA ENVOLVENTE	BRIDE CUVE
2	341156	STAR TOLER.RING 0820-028-04	ANILLO TOLER.STAR 0820-028-04	BAGUE TOLER.STAR 0820-028-04
3	149518	BICR.WASHER B DIN125-ST 8,4	ARAN.B DIN125-ST B.TRI. 8,4	RONDELLE.B DIN125-ST BICR.8,4
4	149500	BICR.WASHER B DIN125-ST 10,5	ARAN.B DIN125-ST B.TRI.10,5	RONDELLE B DIN125-ST BICR.10,5
5	149419	BICR.WASHER B DIN125-ST 13	ARAN.B DIN125-ST B.TRI.13	RONDELLE B DIN125-ST BICR.13
6	261529	WASHER 25X8,5X4	ARANDELA 25X8.5X4 TRIVALEN.	RONDELLE 25X8,5X4
7	115428	WASHER 30X10,5X3	ARANDELA 30X10,5X3 TRIVALEN.	RONDELLE 30X10,5X3
8	423103	MOTOR SLEEVE	CASQUILLO MOTOR	FRETTE MOTEUR
9	427815	COUNTERWEIGHT	CONTRAPESO	CONTREPOIDS
10	427849	CHASSIS SIDE PANEL	LATERAL CHASIS	LATERAL CHASSIS
11	323048	MINISWITCH CHERRY E69-60C	MINIRRUPTOR CHERRY E69-60C	MINIRRUPTEUR CHERRY E69-60C
12	340778	MOTOR MT 90-90/4	MOTOR MT 90-90/4-H	MOTEUR MT 90-90/4
	501270	BEARING 6306-2Z/C3 (END PULLEY)	RODAMIENTO 6306-2Z/C3 (EXTREMO POLEA)	ROULEMENT 6306-2Z/C3 (FINAL POULIE)
	501577	BEARING 6205-2Z/C3 (OPPOSITE END PULLEY)	RODAMIENTO 6205-2Z/C3 (EXTREMO OPUESTO POLEA)	ROULEMENT 6205-2Z/C3 (FINAL OPPOSE POULIE)
13	340729	OUTER-DRUM SUPPORT PROFILE	PERFIL APOYO ENVOLVENTE	PROFILE APPUI CUVE
14	433144	SIDE PROFILE	PERFIL LATERAL	PROFILE LATERAL
15	427856	CHASSIS PLATE	PLACA CHASIS	PLAQUE CHASSIS
16	340745	MOTOR PULLEY MT 90-90/4-H	POLEA MOTOR MT 90-90/4-H	POULIE MOTEUR MT 90-90/4-H
17	422386	REAR SPRING POSITION	POSICIONADOR MUELLE POSTERIOR	POSITION RESSORT ARRIERE
18	432674	WIRE PROTECTION	PROTECCION CABLES	PROTECTION CABLES
19	431163	MOTOR PROTECTION	PROTECCION MOTOR	PROTECTION MOTEUR
20	340877	MOTOR SEPARATOR	SEPARADOR MOTOR	SEPARATEUR MOTEUR
21	320424	SIKAFLEX 252 WHITE UNIPAC 600	BETAMATE 7120 FLEXPACK 600 ML	SIKAFLEX 252 BLANC UNIPAC 600
22	432203	MOTOR SILENTBLOCK	SILENTBLOC MOTOR	SILENTBLOCK MOTEUR
23	423129	MICROSWITCH BRACKET	SOPORTE MICRORRUPTOR	SUPPORT MICRORRUPTEUR
24	338095	MOTOR NUT BRACKET	SOPORTE TUERCA MOTOR	SUPPORT ECROU MOTEUR
25	338053	CLAMP TEIGHTENER	TENSOR ABRAZADERA	TENDEUR BRIDE

info@zipnasklade.ru
8(800)500-69-51

Nº	REF	DENOMINATION	DENOMINACIÓN	DENOMINATION
26	332627	SCREW REF. TT85 T M3 X16	TOR. REF. TT85 T M3 X16	VIS REF.TT85 T M3 X16
27	343434	SCREW 512TTAET M5X12	TORNILLO 512TTAET M5X12 (ESPECIAL)	VIS 512TTAET M5X12
28	183400	PLATE SCREW ST-4, 20 P.F. C/AL.T25	TORNILLO CHAPA ST-4 (ESPECIAL)*	VIS PLAQUE ST-4, 20 P.F. C/AL.T25
29	181826	BIC.HEX SCREW DIN931-8 M10X130	TOR.EX.DIN931-8.8B.TRI.M10X130	VIS HEX BICR.DIN931-8 M10X130
30	340893	BIC.HEX SCREW DIN931-8.8	TOR.EX.DIN931-8.8B.TRI.M12X200	VIS HEX BICR.DIN931-8.8
31	147009	HEX SCREW 8G DIN 933 M-10X25	TOR.EX.DIN933-8.8 B.TRI.M10X25	VIS HEX. DIN 933 M-10X25 8G
32	192849	BIC.HEX SCREW DIN933-8 M-8X25	TOR.EX.DIN933-8.8 B.TRI.M 8X25	VIS HEX.DIN933-8,8 BICR.M-8X25
33	193391	HEX SCREW 8G DIN933 M- 8X 70	TOR.EX.DIN933-8.8 B.TRI.M 8X70	VIS HEX.8G DIN933 M- 8X 70
34	164285	SELF-LOCKING NUT DIN985-8 B.TRI.M8	TUER.AUTOBL.DIN985-8 B.TRI.M8	ECROU AUTOBLOCANT DIN985-8 B.TRI.M8
35	150649	SELF-LOCKING NUT DIN985-8 B.TRI.M10	TUER.AUTOB.DIN985-8 B.TRI.M10	ECROU AUTOBLOCANT DIN985-8 B.TRI.M10
36	150656	SELF-LOCKING NUT DIN985-8 B.TRI.M12	TUER.AUTOB.DIN985-8 B.TRI.M12	ECROU AUTOBLOCANT DIN985-8 B.TRI.M12
37	428391	PLATE COUNTERWEIGHT JOINING	UNION CONTRAPESO PLACA	UNION CONTREPOIDS PLAQUE
38	10181162	POSITIONER	POSICIONADOR	POSITIONNEUR

info@zipnasklade.ru
8(800)500-69-51

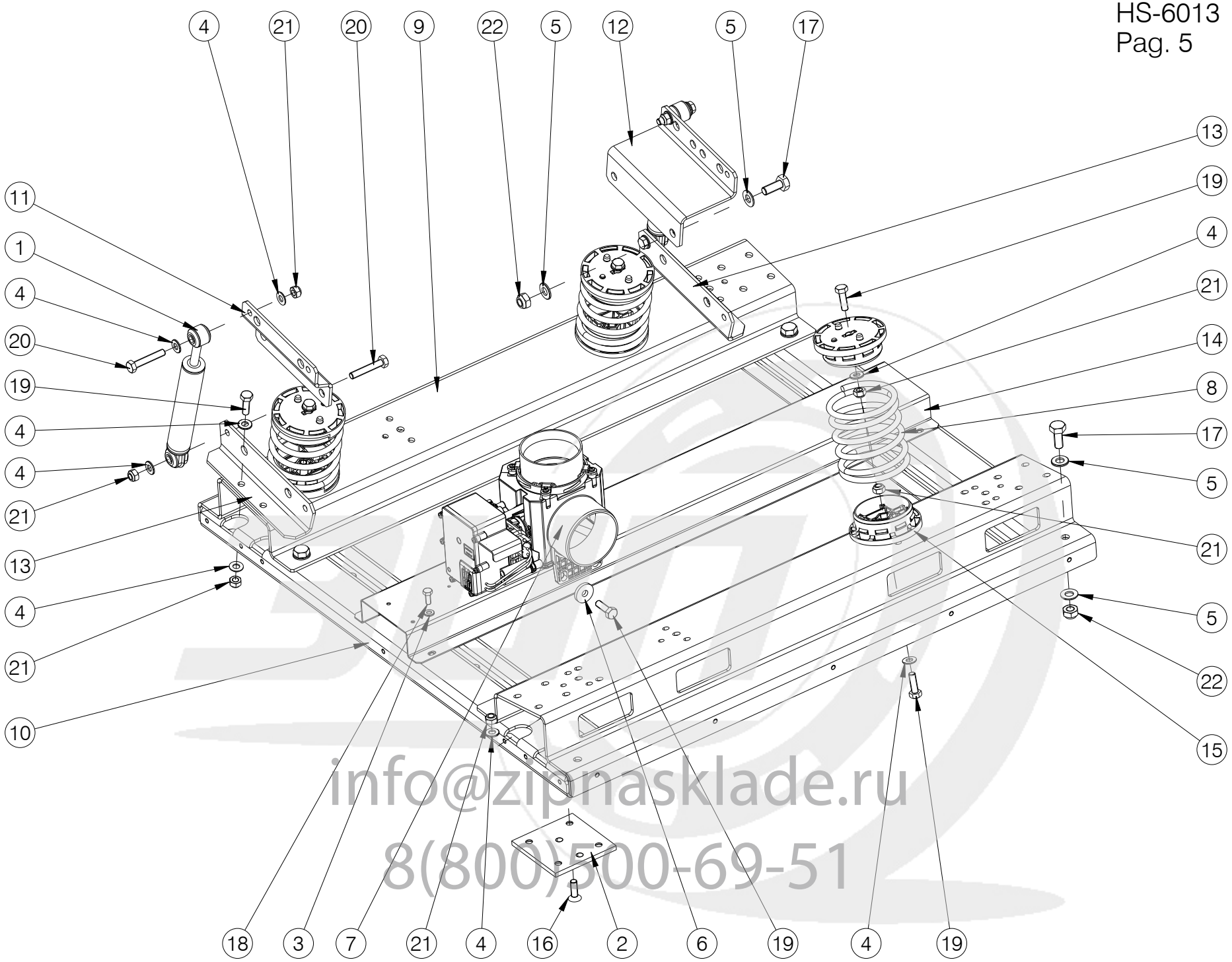

info@zipnasklade.ru
8(800)500-69-51

Nº	REF	DENOMINATION	DENOMINACIÓN	DENOMINATION
1	333476	SHOCK-ABSORBER SUSPA RD10 120N	AMORTIGUADOR SUSPA RD10 120N	AMORTISSEUR SUSPA RD10 120N
2	422360	SUPPORT BASE	APOYO BASE	BASE APPUI
3	149526	BICR.WASHER B DIN125-ST 6,4	ARAN.B DIN125-ST B.TRI. 6,4	RONDELLE B DIN125-ST BICR.6,4
4	149518	BICR.WASHER B DIN125-ST 8,4	ARAN.B DIN125-ST B.TRI. 8,4	RONDELLE.B DIN125-ST BICR.8,4
5	149500	BICR.WASHER B DIN125-ST 10,5	ARAN.B DIN125-ST B.TRI.10,5	RONDELLE B DIN125-ST BICR.10,5
6	261529	WASHER 25X8,5X4	ARANDELA 25X8.5X4 TRIVALEN.	RONDELLE 25X8,5X4
7	600544	DRAIN G3-O-90	DESAGÜE G3-O-90	VIDANGE G3-O-90
8	340786	SUSPENSION SPRING	MUELLE SUSPENSION	RESSORT SUSPENSION
9	432211	BASE LANE PROFILE	PERFIL LONGITUDINAL BASE	PROFILE LONGITUDINAL BASE
10	432195	BASE CROSS PROFILE	PERFIL TRANSVERSAL BASE	PROFILE TRANSVERSAL BASE
11	340695	SHOCK-ABSORBER PLATE	PLATINA AMORTIGUADORES	PLAQUE AMORTISSERURS
12	340828	TRAS.SHOCK-ABSORBER PLATE	PLATINA AMORTIGUADORES TRAS.	PLAQUE AMORTISSEURS TRAS.
13	340679	SHOCK-ABSORBER BRACKET	SOPORTE AMORTIGUADOR	SUPPORT AMORTISSEUR
14	432161	DRAIN BRACKET	SOPORTE DESAGÜE	SUPPORT VIDANGE
15	333351	RIGHT SPRING BRACKET	SOPORTE MUELLE A DERECHAS	SUPPORT RESORT À DROITES
16	175653	COUNTERSUNK SCREW DIN 7991 10,9 M8x25	TORNILLO AVELLANADO DIN 7991 10,9 M8x25	VIS FRAISEE DIN 7991 10,9 M8x25
17	147009	HEX SCREW 8G DIN 933 M-10X25	TOR.EX.DIN933-8.8 B.TRI.M10X25	VIS HEX. DIN 933 M-10X25 8G
18	146233	BICR.HEX SCREW DIN933-8 M6X15	TOR.EX.DIN933-8.8 B.TRI.M 6X15	VIS HEX DIN933-8.8 BICR.M6X15
19	192849	BIC.HEX SCREW DIN933-8 M-8X25	TOR.EX.DIN933-8.8 B.TRI.M 8X25	VIS HEX.DIN933-8,8 BICR.M-8X25
20	191726	HEX SCREW 8G DIN933 M 8X 45	TOR.EX.DIN933-8.8 B.TRI.M 8X45	VIS HEX.8G DIN933 M 8X 45
21	164285	SELF-LOCKING NUT DIN985-8 B.TRI.M8	TUER.AUTOBL.DIN985-8 B.TRI.M8	ECROU AUTOBLOCANT DIN985-8 B.TRI.M8
22	150649	SELF-LOCKING NUT DIN985-8 B.TRI.M10	TUER.AUTOB.DIN985-8 B.TRI.M10	ECROU AUTOBLOCANT DIN985-8 B.TRI.M10

info@zipnasklade.ru
8(800)500-69-51

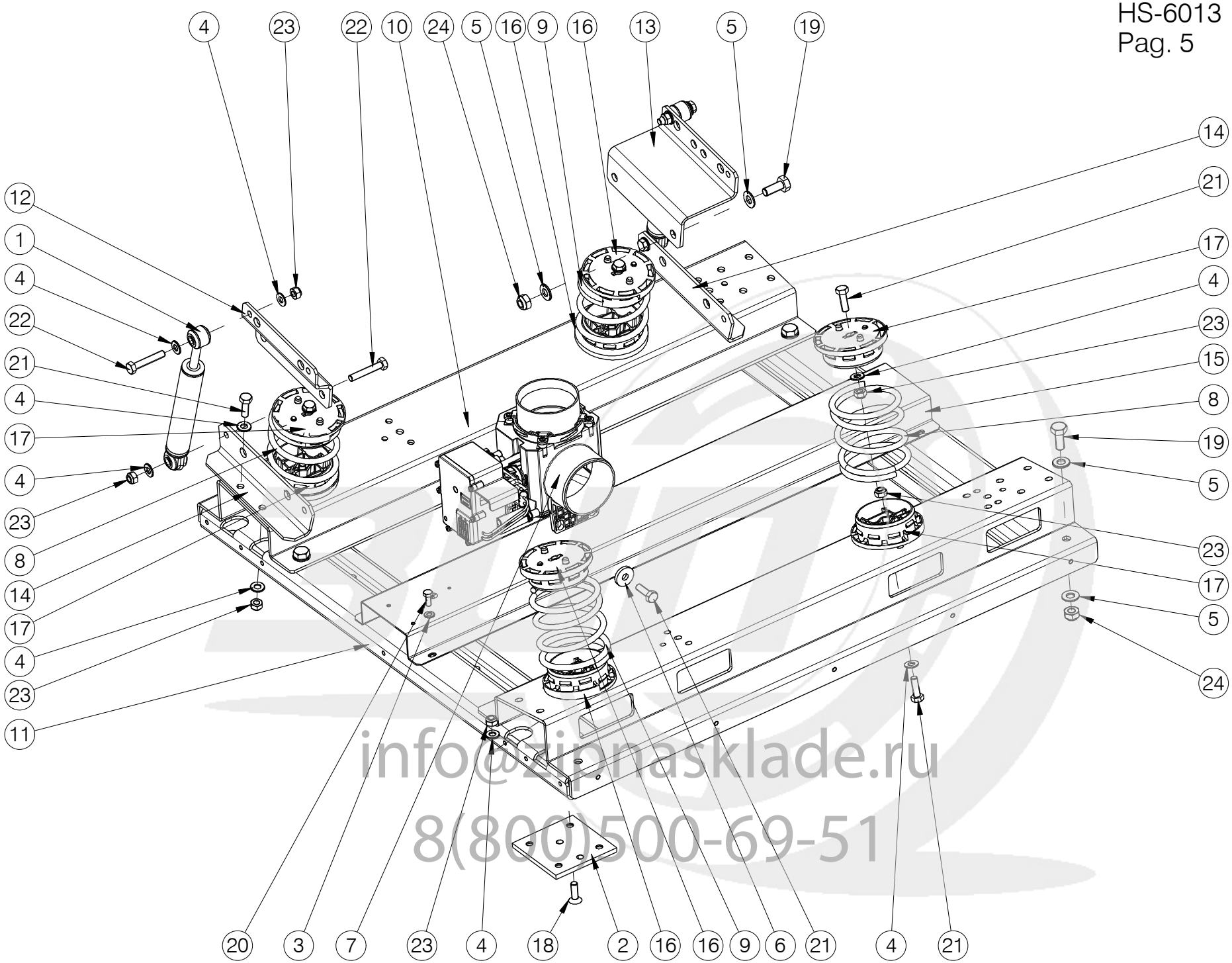

info@zipnasklade.ru
8(800)500-69-51

Nº	REF	DENOMINATION	DENOMINACIÓN	DENOMINATION
		FROM MACHINE Nr: 2.118.171	A PARTIR DE LA MAQUINA No : 2.118.171	A PARTIR DE LA MACHINE NR: 2.118.171
1	333476	SHOCK-ABSORBER SUSPA RD10 120N	AMORTIGUADOR SUSPA RD10 120N	AMORTISSEUR SUSPA RD10 120N
2	422360	SUPPORT BASE	APOYO BASE	BASE APPUI
3	149526	BICR.WASHER B DIN125-ST 6,4	ARAN.B DIN125-ST B.TRI. 6,4	RONDELLE B DIN125-ST BICR.6,4
4	149518	BICR.WASHER B DIN125-ST 8,4	ARAN.B DIN125-ST B.TRI. 8,4	RONDELLE.B DIN125-ST BICR.8,4
5	149500	BICR.WASHER B DIN125-ST 10,5	ARAN.B DIN125-ST B.TRI.10,5	RONDELLE B DIN125-ST BICR.10,5
6	261529	WASHER 25X8,5X4	ARANDELA 25X8.5X4 TRIVALEN.	RONDELLE 25X8,5X4
7	600544	DRAIN G3-O-90	DESAGÜE G3-O-90	VIDANGE G3-O-90
8	10163822	LEVOROTATION SPRING SUSPENSION	MUELLE SUSPENSION LEVOGIRO	RESSORT SUSPENSION LEVOGYRE
9	10187979	DEXTROROTATION SPRING SUSPENSION	MUELLE SUSPENSION DEXTROGIRO	RESSORT SUSPENSION DEXTROGYRE
10	432211	BASE LANE PROFILE	PERFIL LONGITUDINAL BASE	PROFILE LONGITUDINAL BASE
11	432195	BASE CROSS PROFILE	PERFIL TRANSVERSAL BASE	PROFILE TRANSVERSAL BASE
12	340695	SHOCK-ABSORBER PLATE	PLATINA AMORTIGUADORES	PLAQUE AMORTISSERURS
13	340828	TRAS.SHOCK-ABSORBER PLATE	PLATINA AMORTIGUADORES TRAS.	PLAQUE AMORTISSEURS TRAS.
14	340679	SHOCK-ABSORBER BRACKET	SOPORTE AMORTIGUADOR	SUPPORT AMORTISSEUR
15	432161	DRAIN BRACKET	SOPORTE DESAGÜE	SUPPORT VIDANGE
16	333351	RIGHT SPRING BRACKET	SOPORTE MUELLE A DERECHAS	SUPPORT RESORT À DROITES
17	10126498	LEVOROTATION SPRING SUPPORT	SOPORTE MUELLE LEVOGIRO	SUPPORT RESSORT LEVOGYRE
18	175653	COUNTERSUNK SCREW DIN 7991 10,9 M8x25	TORNILLO AVELLANADO DIN 7991 10,9 M8x25	VIS FRAISEE DIN 7991 10,9 M8x25
19	147009	HEX SCREW 8G DIN 933 M-10X25	TOR.EX.DIN933-8.8 B.TRI.M10X25	VIS HEX. DIN 933 M-10X25 8G
20	146233	BICR.HEX SCREW DIN933-8 M6X15	TOR.EX.DIN933-8.8 B.TRI.M 6X15	VIS HEX DIN933-8.8 BICR.M6X15
21	192849	BIC.HEX SCREW DIN933-8 M-8X25	TOR.EX.DIN933-8.8 B.TRI.M 8X25	VIS HEX.DIN933-8,8 BICR.M-8X25
22	191726	HEX SCREW 8G DIN933 M 8X 45	TOR.EX.DIN933-8.8 B.TRI.M 8X45	VIS HEX.8G DIN933 M 8X 45
23	164285	SELF-LOCKING NUT DIN985-8 B.TRI.M8	TUER.AUTOBL.DIN985-8 B.TRI.M8	ECROU AUTOBLOCANT DIN985-8 B.TRI.M8
24	150649	SELF-LOCKING NUT DIN985-8 B.TRI.M10	TUER.AUTOB.DIN985-8 B.TRI.M10	ECROU AUTOBLOCANT DIN985-8 B.TRI.M10

info@zipnasklade.ru
8(800)500-69-51

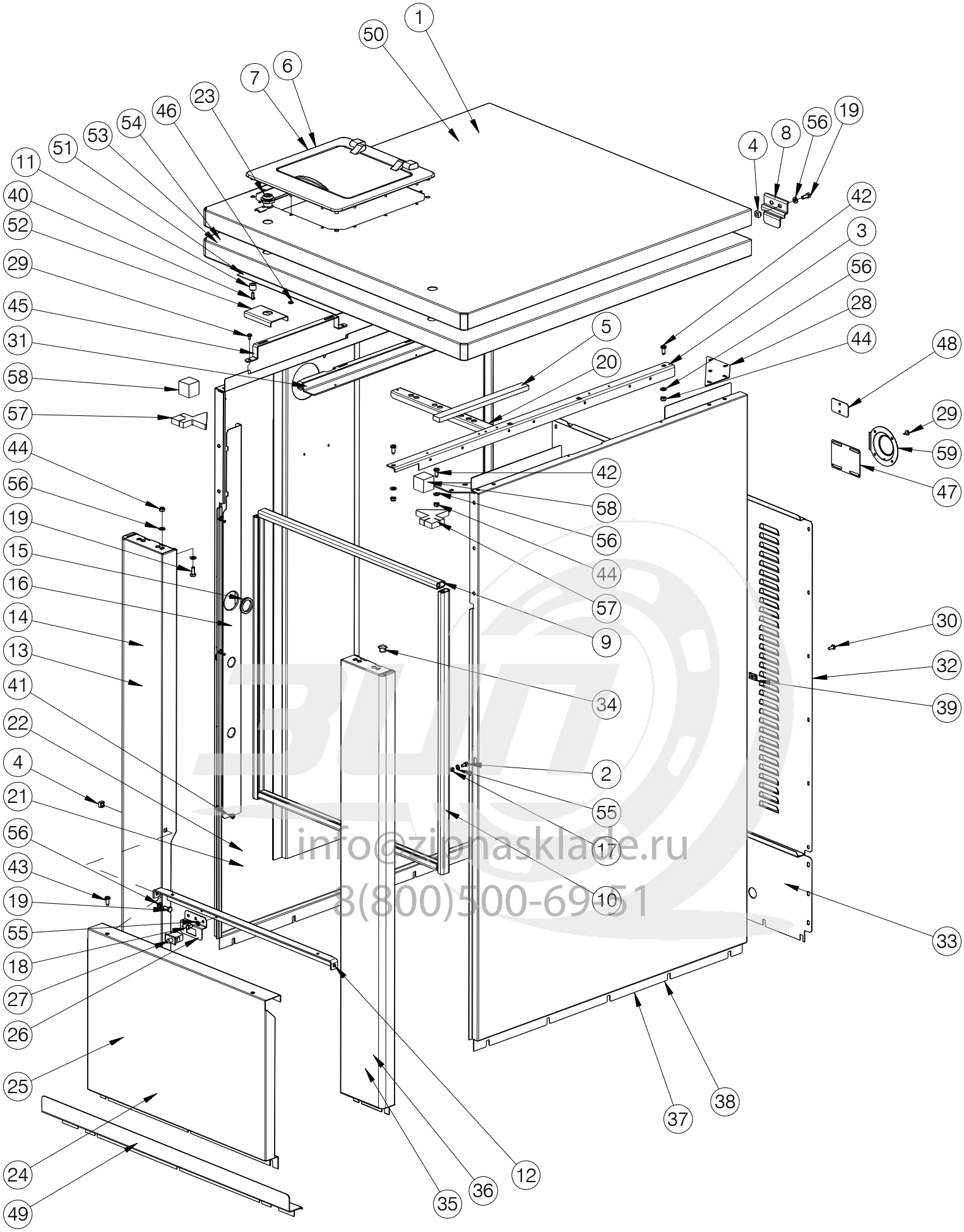
1
50
6
7
23
46
54
53
51
11
40
52
29
45
31
58
57
44
56
19
15
16
14
13
41
22
4
21
56
43
19
55
18
27
26
25
24
49
35
36
12
37
38
33
30
32
39
34
2
55
17
10
9
57
44
56
58
42
5
20
4
8
56
19
42
3
56
28
44
48
29
59
47
info@zipnasklade.ru
8(800)500-69 51

Nº	REF	DENOMINATION	DENOMINACIÓN	DENOMINATION
1	428128	UPPER COVER (INOX)	TAPA SUPERIOR (INOX)	COUVERCLE SUPERIEUR (INOX)
2	144261	ALLEN SCREW DIN 912 M-5X10	TOR.ALLDIN912-8.8 B.TRI.M 5X10	VIS ALLEN DIN 912 M-5X10
3	428011	LANE ANGLE	ANGULO LONGITUDINAL	ANGLE LONGITUDINAL
4	165019	CAGED NUT M-6 0,5-1,5 R.310007-9	TUER.ENJ.M6 0,5-1,5 R.310007-9	*ECROU PRESIONER M-6 0,5-1,5 R.310007-9
5	439000	COVER ABSORBER PROFILE	PERFIL AMORTIGUADOR TAPA	PROFILE AMORTISSEUR COUVERCLE
6	517136	UPPER SOAP DISPENSER LID CC-USA (EH030)	TAPA DOSIFICADOR SUP.CC-USA (EH030)	COUVERCLE BAC A PRODUITS SUP. CC-USA (EH030)
7	517508	UPPER SOAP DISPENSER LID (HS-6013)	TAPA DOSIFICADOR SUP. (HS-6013)	COUVERCLE BAC A PRODUITS SUP. (HS-6013)
8	431593	TOP COVER HINGE	BISAGRA TAPA SUPERIOR	CHARNIERE COUVERCLE SUPERIEUR
9	428169	LOWER COVER AND PANEL PROFILE	PERFIL PANEL Y TAPA INFERIOR	PROF PANNEAU ET COUVERCLE INF
10	428177	FRONT COVER PROFILE	PERFIL TAPAS FRONTALES	PROFILE COUVERCLE FRONTALE
11	444398	FRAME FIXATION SLEEVE	CASQUILLO FIJACION MARCO	FRETTE FIXATION CADRE
12	427914	FRONT COVER FIXING-PIECE	FIJACION TAPA FRONTAL	FIXATION COUVERCLE FRONTAL
13	427898	LEFT FRONT COVER (INOX)	TAPA FRONTAL IZQUIERDA (INOX)	COUVERCLE FRONTAL GAUCHE (INOX)
14	445122	LEFT FRONT COVER (PRE-COATED)	TAPA FRONTAL IZQUIERDA (PRE-COATED)	COUVERCLE FRONTAL GAUCHE (PRE-COATED)
15	341438	CASTING MGS-1-01	MOLDURA MGS-1-01	MOULE MGS-1-01
16	432542	HARNESS CONDUCTION	CONDUCCION CABLEADO	CONDUITE CABLAGE
17	150177	BICR HEX NUT DIN934-8 M5	TUER.EX.DIN934-8 B.TRI.M 5	ECROU HEX DIN934-8 BIC.M5
18	146274	BICR.HEX SCREW DIN933-8 M-5X10	TOR.EX.DIN933-8.8 B.TRI.M 5X10	VIS HEX.BICR.DIN933-8.8 M-5X10
19	146233	BICR.HEX SCREW DIN933-8 M6X15	TOR.EX.DIN933-8.8 B.TRI.M 6X15	VIS HEX DIN933-8.8 BICR.M6X15
20	423327	HOSE FIXING PROFILE	PERFIL FIJACION TUBOS	PROFILE FIXATION TUBES
21	428060	LEFT SIDE PANEL (INOX)	TAPA LATERAL IZQUIERDA (INOX)	COUVERCLE LATERAL GAUCHE (INOX)
22	444943	LEFT SIDE PANEL (PRE-COATED)	TAPA LATERAL IZQUIERDA (PRE-COATED)	COUVERCLE LATERAL GAUCHE (PRE-COATED)
23	196915	LOCK RE.20.00.02.05	CERRADURA REF.20.00.02.05 *	FERMETURE REF.20.00.02.05
	196923	LOCK KEY RE.10.41.213	LLAVE REF.10.41.213 COMB.T-205	CLE FERMETURE REF.10.41.213

info@zipnasklade.ru
8(800)500-69-51

Nº	REF	DENOMINATION	DENOMINACIÓN	DENOMINATION
24	427880	LOWER FRONT COVER (INOX)	T. FRONTAL INFERIOR INOX (INOX)	COUVERCLE FRONTAL INFERIEUR (INOX)
25	529255	LOWER FRONT COVER (PRE-COATED)	T. FRONTAL INFERIOR PRECOATED (PRE-COATED)	COUVERCLE FRONTAL INFERIEUR (PRE-COATED)
26	423129	MICROSWITCH BRACKET	SOPORTE MICRORRUPTOR	SUPPORT MICRORRUPTEUR
27	323048	MINISWITCH CHERRY E69-60C	MINIRRUPTOR CHERRY E69-60C	MINIRRUPTEUR CHERRY E69-60C
28	406298	PANEL FIXING RENFORT	REFUERZO FIJACION TAPAS	REFORT FIXATION COUVERCLES
29	183400	PLATE SCREW ST-4, 20 P.F. C/AL.T25	TORNILLO CHAPA ST-4 (ESPECIAL)*	VIS PLAQUE ST-4, 20 P.F. C/AL.T25
30	149153	PLATE SCREW ST-4, 80 P.C. A/AL.T25	TORNILLO CHAPA ST-4 (ESPECIAL)*	VIS PLAQUE ST-4, 80 P.C. A/AL.T25
31	428003	SOAP DISP.HOLDING DOWN PROFILE	PERFIL ANCLAJE DOSIFICADOR	PROFILE SCELLEMENT BAD A PROD.
32	428227	REAR COVER	TAPA POSTERIOR	COUVERCLE ARRIERE
33	428235	LOWER REAR COVER	TAPA POSTERIOR INFERIOR	COUVERCLE ARRIERE INFERIEUR
34	323717	END PIECE	CANTONERA	ARRET
35	427906	RIGHT FRONT COVER (INOX)	TAPA FRONTAL DERECHA (INOX)	COUVERCLE FRONTAL DROIT (INOX)
36	445130	RIGHT FRONT COVER (PRE-COATED)	TAPA FRONTAL DERECHA (PRE-COATED)	COUVERCLE FRONTAL DROIT (PRE-COATED)
37	428037	RIGHT SIDE PANEL (INOX)	TAPA LATERAL DERECHA (INOX)	COUVERCLE LATERAL DROIT (INOX)
38	444968	RIGHT SIDE PANEL (PRE-COATED)	TAPA LATERAL DERECHA (PRE-COATED)	COUVERCLE LATERAL DROIT (PRE-COATED)
39	135228	NUT NUL 506-2A REF. 213048-1	TUERCA SEG.NUL 506-2B 213048-1	ECROU NUL 506-2A REF. 213048-1
40	326660	SCREW 412RFX87T INOXA2 4X12	TORNILLO 412RFX87T INOXA2 4X12(ESPECIAL)	VIS 412RFX87T INOXA2 4X12
41	322750	SCREW FDS SF-M5X12 PKS TORX SPER	TORNILLO FDS SF-M5X12 (ESPECIAL)*	VIS FDS SF-M5X12 PKS TORX SPER
42	333625	SCREW T25 A18EST.M6X15 TRI.	TOR.ALOM.T25 A18EST.M6X15 TRI.(ESPECIAL)	VIS T25 A18EST.M6X15 TRI.
43	333294	SCREW T25 AR.18ESTR.M 6X15 INOX	TORNILLO ALOM.T25 M 6X15 INOX(ESPECIA	VIS T25 AR.18ESTR.M 6X15 INOX
44	176834	SELF-LOCKING NUT DIN985-8 B.TRI.M6	TUER.AUTOBL.DIN985-8 B.TRI.M6	ECROU AUTOBLOCANT DIN985-8 B.TRI.M6
45	431742	SOAP DISPENSER BRACKET	SOPORTE DOSIFICADOR	SUPPORT BAC A PRODUITS
46	193540	MIKALOR QUICK FIXING 211038-8	SUJEC.RAPIDA MIKALOR 211038-8	FIXATION RAPIDE MIKALOR 211038-8
47	608034	STEAM INLET PROTECTION (FOR MACHINES STEAM HEATING)	PROTECCION ENTRADA VAPOR (PARA MODELOS CALEF. VAPOR)	PROTECTION ENTREE VAPEUR (POUR MACHINES CHAUF.VAPEUR)

info@zipnasklade.ru
8(800)500-69-51

Nº	REF	DENOMINATION	DENOMINACIÓN	DENOMINATION
48	607580	STEAM PROTECTION PLATE (FOR MACHINES STEAM HEATING)	CHAPA PROTECCION VAPOR (PARA MODELOS CALEF. VAPOR)	PLAQUE PROTECTION VAPEUR (POUR MACHINES CHAUF.VAPEUR)
49	432260	TOE PLATE	ZOCALO	SOCLE
50	445601	UPPER COVER (PRE-COATED)	TAPA SUPERIOR (PRE-COATED)	COUVERCLE SUPERIEUR (PRE-COATED)
51	590539	TOP COVER BLIND PROTECTOR	PROTECTOR TAPA SUPERIOR CIEGA*	AVEUGLE SUPERIEUR PROTECTEUR COUVERCLE
52	242115	UPPER COVER RENFORT	REFUERZO TAPA SUPERIOR	REFORT COUVERCLE SUPERIEUR
53	609693	UPPER COVER SET (WITHOUT SOAP DISPENSER) (PRE-COATED)	CONJUNTO TAPA SUPERIOR (SIN DOSIFICADOR) (PRE-COATED)	ENSEMBLE COUVERCLE SUPERIEUR (NAS BAC A PRODUITS) (PRE-COATED)
54	10123933	UPPER COVER SET (WITHOUT SOAP DISPENSER) (INOX)	CONJUNTO TAPA SUPERIOR (SIN DOSIFICADOR) (INOX)	ENSEMBLE COUVERCLE SUPERIEUR (NAS BAC A PRODUITS) (INOX)
55	149534	BICR.WASHER B DIN125-ST 5,3	ARAN.B DIN125-ST BICR. 5,3	RONDELLE B BICR.DIN125-ST 5,3
56	149526	BICR.WASHER B DIN125-ST 6,4	ARAN.B DIN125-ST B.TRI. 6,4	RONDELLE B DIN125-ST BICR.6,4
57	10011740	WATER DEFLECTOR	DEFLECTOR AGUA	DÉFLECTEUR EAU
58	10068203	WATER DEFLECTOR	DEFLECTOR AGUA	DÉFLECTEUR EAU
59	608265	STEAM INLET PROTECTION (FOR MACHINES STEAM HEATING)	PROTECCION ENTRADA VAPOR (PARA MODELOS CALEF. VAPOR)	PROTECTION ENTREE VAPEUR (POUR MACHINES CHAUF.VAPEUR)

info@zipnasklade.ru
8(800)500-69-51

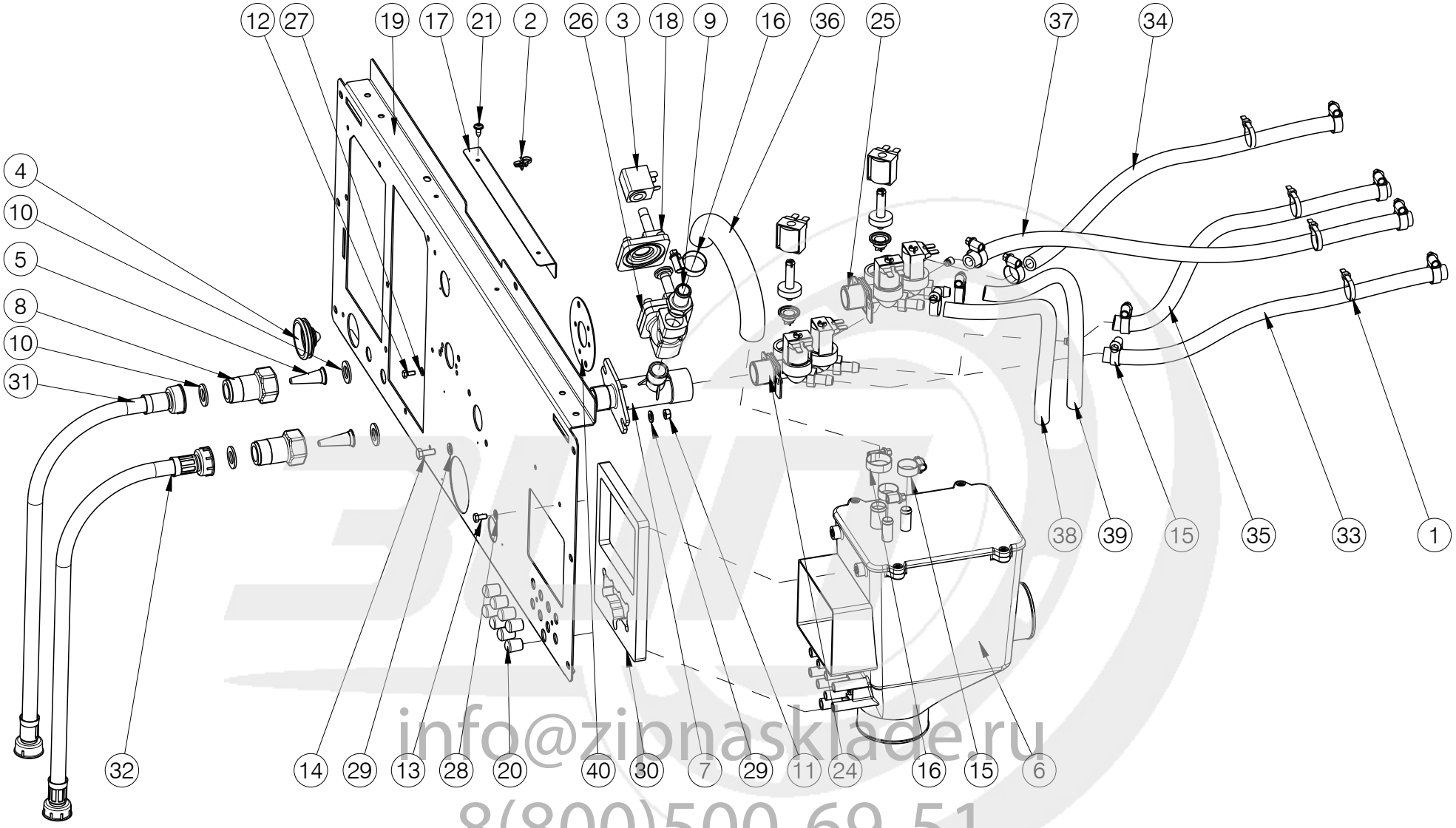

info@zipnasklade.ru
8(800)500-69-51

Nº	REF	DENOMINATION	DENOMINACIÓN	DENOMINATION
1	140525	CLAMP 2244-0	BRIDA UNEX 2244-0 *	BRIDE 2244-0
2	326132	CABLE TIE Ø35 NATURAL	ABRAZADERA Ø35 NATURAL	BRIDE Ø35 NATUREL
3	333716	COIL AB 5W 12V CC 042N0806	BOBINA AB 5W 12V CC 042N0806	BOBINE AB 5W 12V CC 042N0806
4	139683	CONE ECPC-6	CONO HIMEL ECPC-6	CONE ECPC-6
5	315614	CONICAL FILTER REF.4008-2-1	FILTRO CONICO REF.4008-2-1	FILTRE CONIQUE REF.4008-2-1
6	339689	DISTRIBUTOR	DISTRIBUIDOR	DISTRIBUTEUR
7	333682	ELECTROVALVE BRACKET	SOPORTE ELECTROVALVULAS	SUPPORT ELECTROVANNES
8	315317	FILTER BODY	CUERPO FILTRO	CORPS FILTRE
9	333690	FIG. 243 MI 1/2" BRASS	FIGURA 243 MI DE 1/2" LATON	FIG. 243 MI 1/2" LAITON
10	114348	GASKET D24XD13,5X2	JUNTA MIFLEX D24X13, 5X2 EPDM WRC 400105	JOINT D24XD13,5X2
11	150227	BICR HEX NUT DIN934-8 M6	TUER.EX.DIN934-8 B.TRI.M 6	ECROU HEX DIN934-8 BICR.M6
12	146258	BIC.HEX SCREW DIN933-4.8 M4X10	TOR.EX.DIN933-4.8 B.TRI.M 4X10	VIS HEX DIN933-4.8 BICR.M 4X10
13	146274	BICR.HEX SCREW DIN933-8 M-5X10	TOR.EX.DIN933-8.8 B.TRI.M 5X10	VIS HEX.BICR.DIN933-8.8 M-5X10
14	146233	BICR.HEX SCREW DIN933-8 M6X15	TOR.EX.DIN933-8.8 B.TRI.M 6X15	VIS HEX DIN933-8.8 BICR.M6X15
15	155150	HOSE CLIP ASFA-L W2 8-16	ABRAZADERA ASFA-L W2 8-16	COLLIER ASFA-L W2 8-16
16	156109	CLAMP 16-27	ABRAZADERA 16- 27 *	BRIDE 16-27
17	431767	INSTALLATION FIXING PROFILE	PERFIL FIJACION INSTALACION	PROFILE FIXATION INSTALLATION
18	341685	SPARE-PARTS KIT EV220A 12-14B	KIT REPUES.EV220A 12-14B *	KIT RECHANGES EV220A 12-14B
19	432229	REAR PANEL	PANEL POSTERIOR	PANNEAU ARRIERE
20	156679	CONICAL END-PIECE R-16 D10	TOPE CONICO REPRIMSA R-16 D10	BOUCHON CONIQUE R-16 D10
21	322750	SCREW FDS SF-M5X12 PKS TORX SPER	TORNILLO FDS SF-M5X12 (ESPECIAL)*	VIS FDS SF-M5X12 PKS TORX SPER
22	307587	THREAD SEALANT	SELLADOR DE ROSCAS	ÉTANCHÉITÉ FILETÉE
23	358184	THREAD SEALING CORD	HILO SELLADOR	FIBRE D'ETANCHÉITÉ
24	511139	THREE TRACK ELECTROVALVE	ELECTROVALVULA TRES VIAS	ELECTROVANNE TROIS VOIES
	156265	REGULATOR 3 L/MIN (BLACK)	REGULADOR DE 3 L/MIN. (NEGRO)	REGULATEUR 3 L/MIN (NOIR)
	510933	REGULATOR 4 L/MIN.RED	REGULADOR DE 4L/MIN.ROJO CLARO	REGULATEUR 4 L/MIN ROUGE
	300194	YELLOW CASE 30053	ESTUCHE AMARILLO 30053	BOITE JAUNE 30053
	300202	INTEGRAL GUIDE-MEMBRANE 30696	MEMBRANA-GUIA INTEGRAL 30696 *	MEMBRANE-GUIDE INTEGRALE 30696

info@zipnasklade.ru
8(800)500-69-51

Nº	REF	DENOMINATION	DENOMINACIÓN	DENOMINATION
	332296	COIL 255043000000 12VCC	BOBINA 255043000000 12VCC	BOBINE 255043000000 12VCC
25	333674	TRIPLE ELECTROVALVE 369 180º	ELECTROV.TRIPLE 369 180º12VCC*	ELECTROVANNE TRIPLE 369 180º
	300194	YELLOW CASE 30053	ESTUCHE AMARILLO 30053	BOITE JAUNE 30053
	300202	INTEGRAL GUIDE-MEMBRANE 30696	MEMBRANA-GUIA INTEGRAL 30696 *	MEMBRANE-GUIDE INTEGRALE 30696
	332296	COIL 255043000000 12VCC	BOBINA 255043000000 12VCC	BOBINE 255043000000 12VCC
26	333708	VALVE EV220A G12 042U4022	CUERPO VAL.EV220A G12 042U4022	VANNE EV220A G12 042U4022
27	149476	BICR.WASHER B DIN125-ST 4,3	ARAN.B DIN125-ST B.TRI. 4,3	RONDELLE B DIN125-ST BICR.4,3
28	149534	BICR.WASHER B DIN125-ST 5,3	ARAN.B DIN125-ST BICR. 5,3	RONDELLE B BICR.DIN125-ST 5,3
29	149526	BICR.WASHER B DIN125-ST 6,4	ARAN.B DIN125-ST B.TRI. 6,4	RONDELLE B DIN125-ST BICR.6,4
30	10003960	WATER DEFLECTOR	DEFLECTOR AGUA	DÉFLECTEUR EAU
31	326587	WATER INLET AC DI12,5 L1,5M	TUBO ENTRADA AC DI12,5 L1,5M *	FLEXIBLE ENTRÉE AC DI12,5 L1,5
32	326579	WATER INLET AF DI12,5 L1,5M	TUBO ENTRADA AF DI12,5 L1,5M *	FLEXIBLE ENTRÉE AF DI12,5 L,5M
33	411363	WATER INLET HOSE	TUBO ENTRADA AGUA	TUBE ENTREE EAU
34	427195	WATER INLET HOSE	TUBO ENTRADA AGUA	TUBE ENTREE EAU
35	427195	WATER INLET HOSE	TUBO ENTRADA AGUA	TUBE ENTREE EAU
36	429845	WATER INLET HOSE	TUBO ENTRADA AGUA	TUBE ENTREE EAU
37	10919835	WATER INLET HOSE	TUBO ENTRADA AGUA	TUBE ENTRÉE EAU
38	10919850	WATER INLET TUBE	TUBO ENTRADA AGUA	TUBE ENTREE EAU
39	10919850	WATER INLET TUBE	TUBO ENTRADA AGUA	TUBE ENTREE EAU
40	606939	FIXING PLATE VALVE	CHAPA FIJACION VALVULA	PLATEAU FIXATION VANNE

info@zipnasklade.ru
8(800)500-69-51

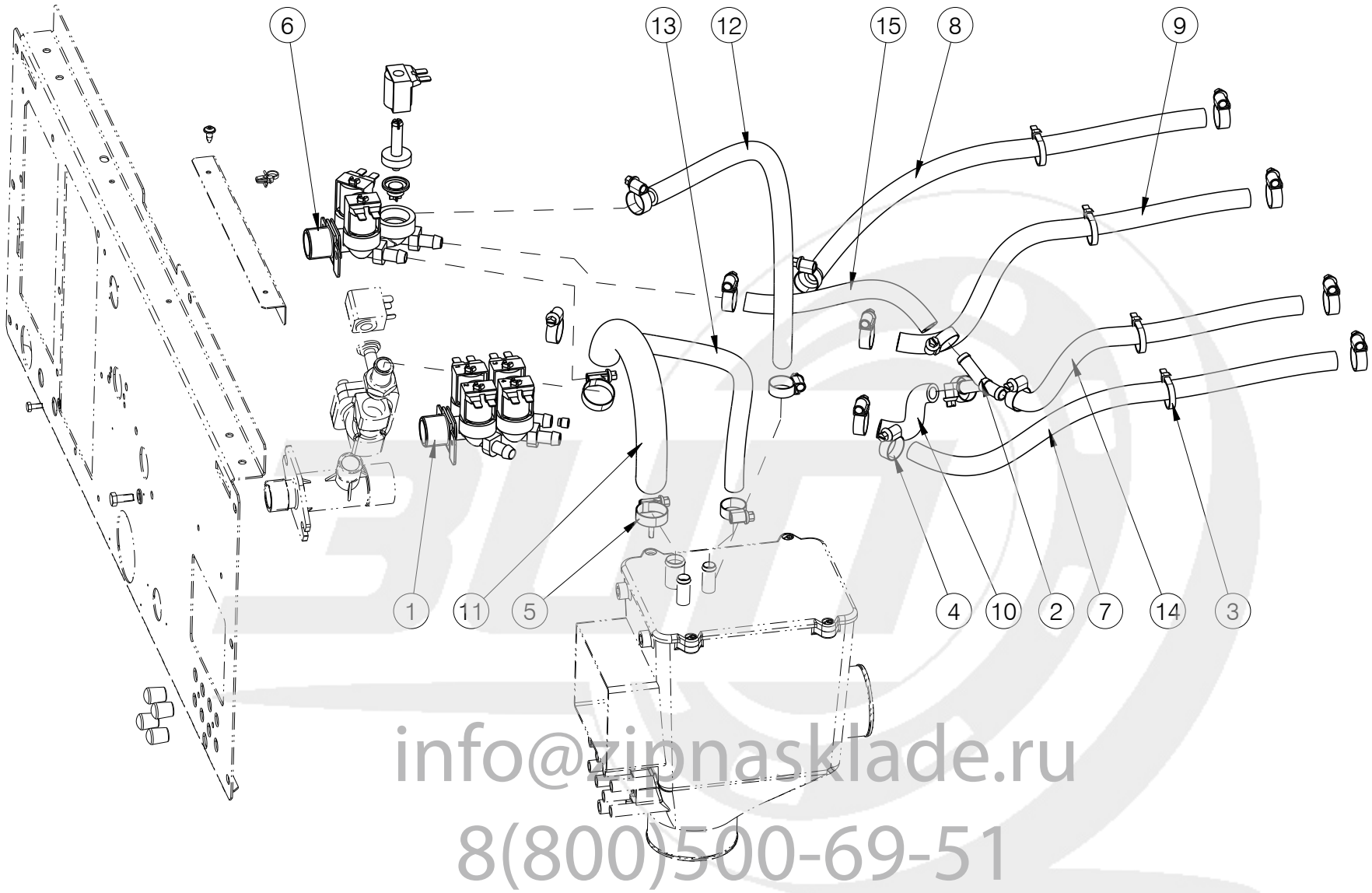

info@zipnasklade.ru
8(800)500-69-51

Nº	REF	DENOMINATION	DENOMINACIÓN	DENOMINATION
1	511212	4 TRACK ELECTROVALVE 389 180ºC	ELECTROV.CUADRUPLE 389 180º *	ELECTROVANNE 4 VOIES 389 180ºC
	156265	REGULATOR 3 L/MIN (BLACK)	REGULADOR DE 3 L/MIN. (NEGRO)	REGULATEUR 3 L/MIN (NOIR)
	510933	REGULATOR 4 L/MIN.RED	REGULADOR DE 4L/MIN.ROJO CLARO	REGULATEUR 4 L/MIN ROUGE
	300194	YELLOW CASE 30053	ESTUCHE AMARILLO 30053	BOITE JAUNE 30053
	300202	INTEGRAL GUIDE-MEMBRANE 30696	MEMBRANA-GUIA INTEGRAL 30696 *	MEMBRANE-GUIDE INTEGRALE 30696
	332296	COIL 255043000000 12VCC	BOBINA 255043000000 12VCC	BOBINE 255043000000 12VCC
2	152165	BRANCH	BIFURCACION	BIFURCATION
3	140525	CLAMP 2244-0	BRIDA UNEX 2244-0 *	BRIDE 2244-0
4	155150	HOSE CLIP ASFA-L W2 8-16	ABRAZADERA ASFA-L W2 8-16	COLLIER ASFA-L W2 8-16
5	156109	CLAMP 16-27	ABRAZADERA 16- 27 *	BRIDE 16-27
6	333674	TRIPLE ELECTROVALVE 369 180º	ELECTROV.TRIPLE 369 180º12VCC*	ELECTROVANNE TRIPLE 369 180º
	300194	YELLOW CASE 30053	ESTUCHE AMARILLO 30053	BOITE JAUNE 30053
	300202	INTEGRAL GUIDE-MEMBRANE 30696	MEMBRANA-GUIA INTEGRAL 30696 *	MEMBRANE-GUIDE INTEGRALE 30696
	332296	COIL 255043000000 12VCC	BOBINA 255043000000 12VCC	BOBINE 255043000000 12VCC
7	411389	WATER INLET HOSE	TUBO ENTRADA AGUA	TUBE ENTREE EAU
8	411389	WATER INLET HOSE	TUBO ENTRADA AGUA	TUBE ENTREE EAU
9	427195	WATER INLET HOSE	TUBO ENTRADA AGUA	TUBE ENTREE EAU
10	429829	WATER INLET HOSE	TUBO ENTRADA AGUA	TUBE ENTREE EU
11	429845	WATER INLET HOSE	TUBO ENTRADA AGUA	TUBE ENTREE EAU
12	10920080	WATER INLET HOSE	TUBO ENTRADA AGUA	TUBE ENTRÉE EAU
13	10920122	WATER INLET HOSE	TUBO ENTRADA AGUA	TUBE ENTREE EAU
14	10920148	WATER INLET HOSE	TUBO ENTRADA AGUA	TUBE ENTRÉE EAU
15	10920148	WATER INLET HOSE	TUBO ENTRADA AGUA	TUBE ENTRÉE EAU

info@zipnasklade.ru
8(800)500-69-51

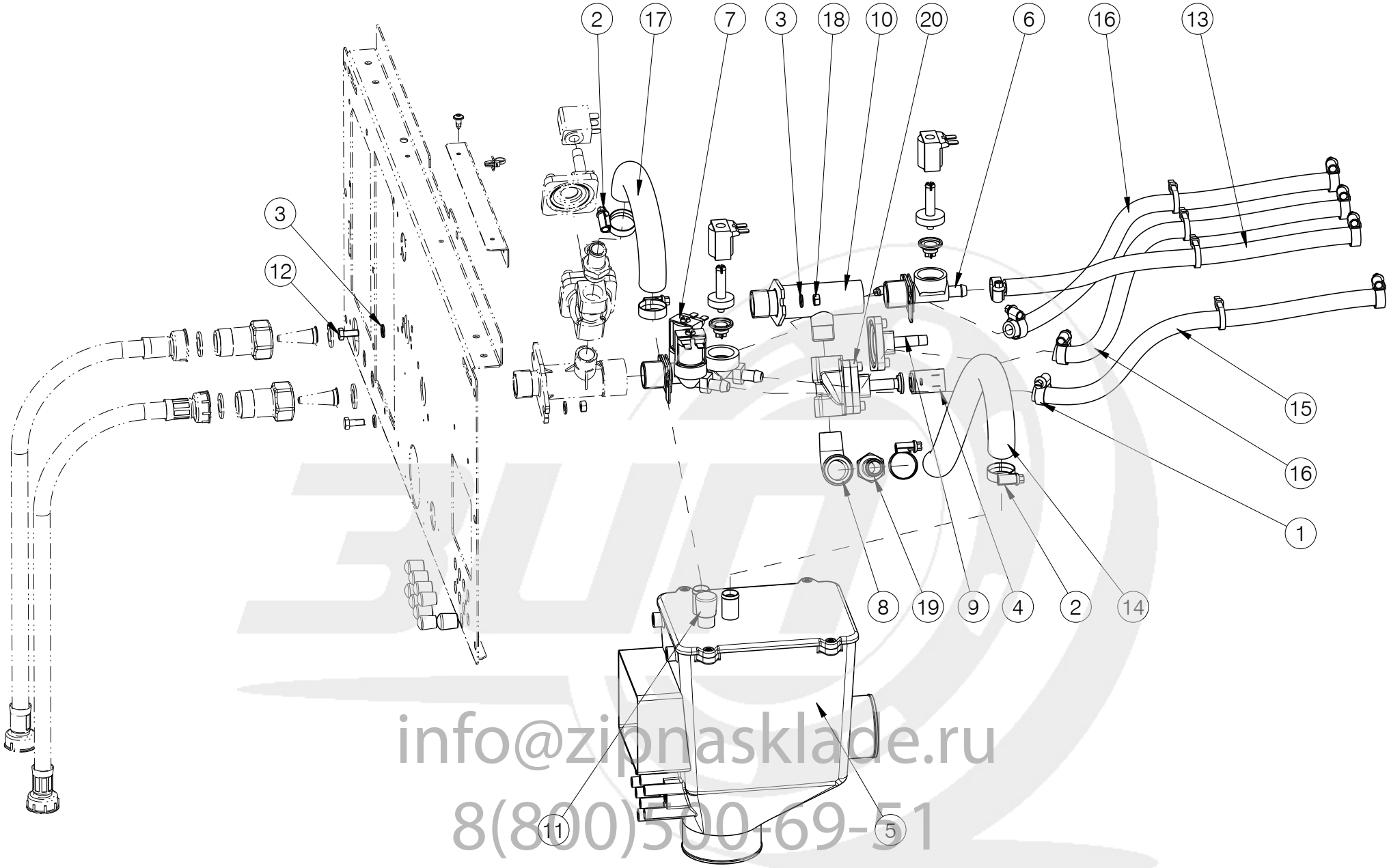

info@zipnasklade.ru
8(800)500-69-51

Nº	REF	DENOMINATION	DENOMINACIÓN	DENOMINATION
1	155150	HOSE CLIP ASFA-L W2 8-16	ABRAZADERA ASFA-L W2 8-16	COLLIER ASFA-L W2 8-16
2	156109	CLAMP 16-27	ABRAZADERA 16- 27 *	BRIDE 16-27
3	149526	BICR.WASHER B DIN125-ST 6,4	ARAN.B DIN125-ST B.TRI. 6,4	RONDELLE B DIN125-ST BICR.6,4
4	333716	COIL AB 5W 12V CC 042N0806	BOBINA AB 5W 12V CC 042N0806	BOBINE AB 5W 12V CC 042N0806
5	333658	DISTRIBUTOR	DISTRIBUIDOR	DISTRIBUTEUR
6	323329	SIMPLE ELECTROVALVE 329 180	ELECTROV.SIMPLE 329 180	ELECTROVANNE SIMPLE 329 180
	156265	REGULATOR 3 L/MIN (BLACK)	REGULADOR DE 3 L/MIN. (NEGRO)	REGULATEUR 3 L/MIN (NOIR)
	300194	YELLOW CASE 30053	ESTUCHE AMARILLO 30053	BOITE JAUNE 30053
	300202	INTEGRAL GUIDE-MEMBRANE 30696	MEMBRANA-GUIA INTEGRAL 30696 *	MEMBRANE-GUIDE INTEGRALE 30696
	332296	COIL 255043000000 12VCC	BOBINA 255043000000 12VCC	BOBINE 255043000000 12VCC
7	511139	THREE TRACK ELECTROVALVE	ELECTROVALVULA TRES VIAS	ELECTROVANNE TROIS VOIES
	156265	REGULATOR 3 L/MIN (BLACK)	REGULADOR DE 3 L/MIN. (NEGRO)	REGULATEUR 3 L/MIN (NOIR)
	510933	REGULATOR 4 L/MIN.RED	REGULADOR DE 4L/MIN.ROJO CLARO	REGULATEUR 4 L/MIN ROUGE
	300194	YELLOW CASE 30053	ESTUCHE AMARILLO 30053	BOITE JAUNE 30053
	300202	INTEGRAL GUIDE-MEMBRANE 30696	MEMBRANA-GUIA INTEGRAL 30696 *	MEMBRANE-GUIDE INTEGRALE 30696
	332296	COIL 255043000000 12VCC	BOBINA 255043000000 12VCC	BOBINE 255043000000 12VCC
8	129494	ELBOW FIG 92 1/2" GALV	FIGURA 92 DE 1/2"AMAT GALV.	COUDE FIG 92 1/2" GALV
9	341685	SPARE-PARTS KIT EV220A 12-14B	KIT REPUES.EV220A 12-14B *	KIT RECHANGES EV220A 12-14B
10	552133	ELECTROVALVE BRACKET	SOPORTE ELECTROVALVULAS	SUPPORT ELECTROVANNES
11	156687	CONICAL END-PIECE R-16 D16	TOPE CONICO REPRIMSA R-16 D16	ARRET CONIQUE R-16 D16
12	146233	BICR.HEX SCREW DIN933-8 M6X15	TOR.EX.DIN933-8.8 B.TRI.M 6X15	VIS HEX DIN933-8.8 BICR.M6X15
13	358085	WATER INLET HOSE	TUBO ENTRADA AGUA	TUBE ENTREE EAU
14	411199	WATER INLET HOSE	TUBO ENTRADA AGUA	TUBE ENTRÉE EAU
15	411363	WATER INLET HOSE	TUBO ENTRADA AGUA	TUBE ENTREE EAU
16	427195	WATER INLET HOSE	TUBO ENTRADA AGUA	TUBE ENTREE EAU
17	429845	WATER INLET HOSE	TUBO ENTRADA AGUA	TUBE ENTREE EAU
18	150227	BICR HEX NUT DIN934-8 M6	TUER.EX.DIN934-8 B.TRI.M 6	ECROU HEX DIN934-8 BICR.M6
19	333690	FIG. 243 MI 1/2" BRASS	FIGURA 243 MI DE 1/2" LATON	FIG. 243 MI 1/2" LAITON

info@zipnasklade.ru
8(800)500-69-51

Nº	REF	DENOMINATION	DENOMINACIÓN	DENOMINATION
20	333708	VALVE EV220A G12 042U4022	CUERPO VAL.EV220A G12 042U4022	VANNE EV220A G12 042U4022

info@zipnasklade.ru
8(800)500-69-51

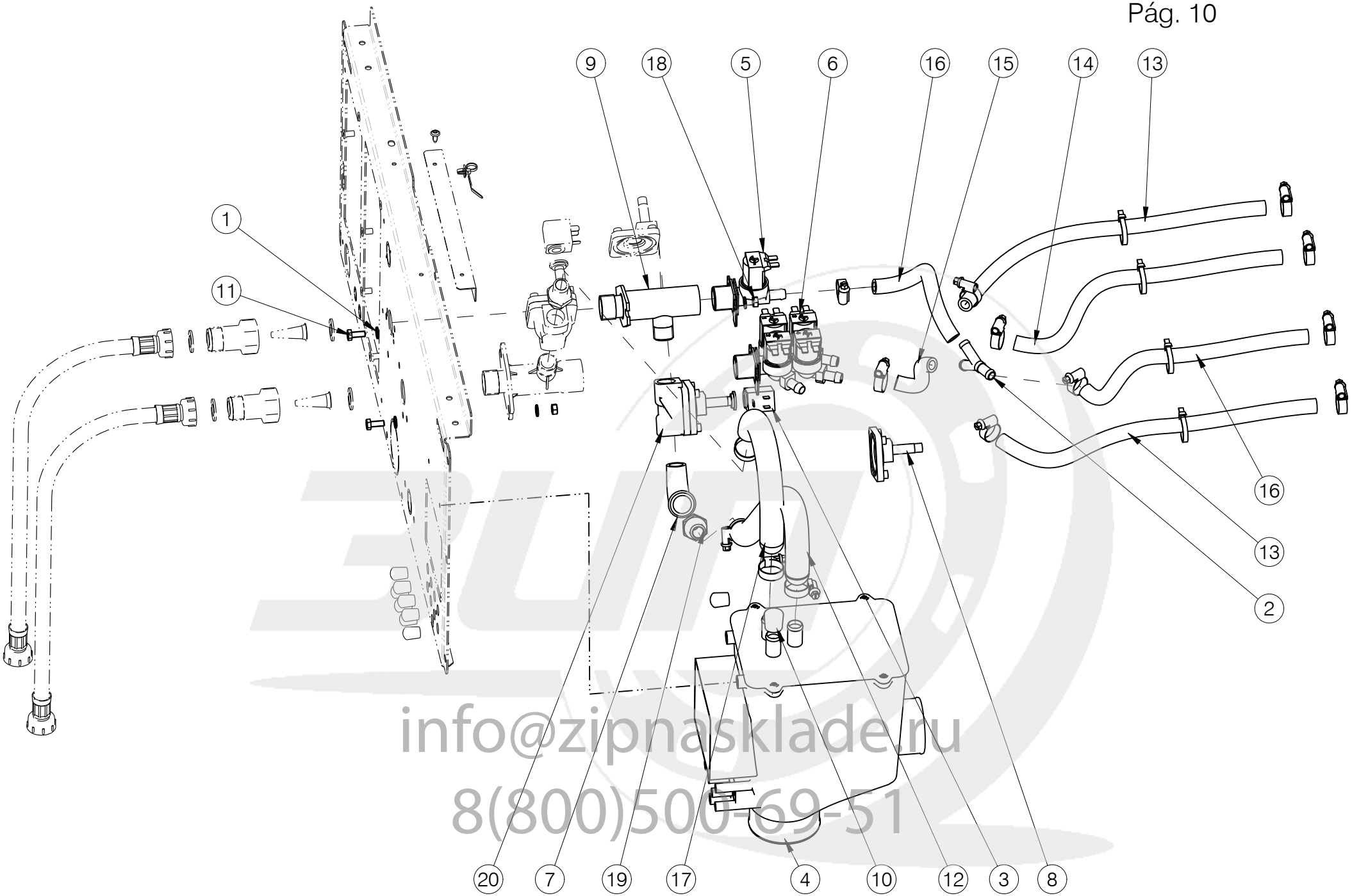

info@zipnasklade.ru
8(800)500-69-51

Nº	REF	DENOMINATION	DENOMINACIÓN	DENOMINATION
1	149526	BICR.WASHER B DIN125-ST 6,4	ARAN.B DIN125-ST B.TRI. 6,4	RONDELLE B DIN125-ST BICR.6,4
2	152165	BRANCH	BIFURCACION	BIFURCATION
3	333716	COIL AB 5W 12V CC 042N0806	BOBINA AB 5W 12V CC 042N0806	BOBINE AB 5W 12V CC 042N0806
4	333658	DISTRIBUTOR	DISTRIBUIDOR	DISTRIBUTEUR
5	323329	SIMPLE ELECTROVALVE 329 180	ELECTROV.SIMPLE 329 180	ELECTROVANNE SIMPLE 329 180
	156265	REGULATOR 3 L/MIN (BLACK)	REGULADOR DE 3 L/MIN. (NEGRO)	REGULATEUR 3 L/MIN (NOIR)
	300194	YELLOW CASE 30053	ESTUCHE AMARILLO 30053	BOITE JAUNE 30053
	300202	INTEGRAL GUIDE-MEMBRANE 30696	MEMBRANA-GUIA INTEGRAL 30696 *	MEMBRANE-GUIDE INTEGRALE 30696
	332296	COIL 255043000000 12VCC	BOBINA 255043000000 12VCC	BOBINE 255043000000 12VCC
6	511212	4 TRACK ELECTROVALVE 389 180ºC	ELECTROV.CUADRUPLE 389 180º *	ELECTROVANNE 4 VOIES 389 180ºC
	156265	REGULATOR 3 L/MIN (BLACK)	REGULADOR DE 3 L/MIN. (NEGRO)	REGULATEUR 3 L/MIN (NOIR)
	510933	REGULATOR 4 L/MIN.RED	REGULADOR DE 4L/MIN.ROJO CLARO	REGULATEUR 4 L/MIN ROUGE
	300194	YELLOW CASE 30053	ESTUCHE AMARILLO 30053	BOITE JAUNE 30053
	300202	INTEGRAL GUIDE-MEMBRANE 30696	MEMBRANA-GUIA INTEGRAL 30696 *	MEMBRANE-GUIDE INTEGRALE 30696
	332296	COIL 255043000000 12VCC	BOBINA 255043000000 12VCC	BOBINE 255043000000 12VCC
7	129494	ELBOW FIG 92 1/2" GALV	FIGURA 92 DE 1/2"AMAT GALV.	COUDE FIG 92 1/2" GALV
8	341685	SPARE-PARTS KIT EV220A 12-14B	KIT REPUES.EV220A 12-14B *	KIT RECHANGES EV220A 12-14B
9	552133	ELECTROVALVE BRACKET	SOPORTE ELECTROVALVULAS	SUPPORT ELECTROVANNES
10	156687	CONICAL END-PIECE R-16 D16	TOPE CONICO REPRIMSA R-16 D16	ARRET CONIQUE R-16 D16
11	146233	BICR.HEX SCREW DIN933-8 M6X15	TOR.EX.DIN933-8.8 B.TRI.M 6X15	VIS HEX DIN933-8.8 BICR.M6X15
12	411199	WATER INLET HOSE	TUBO ENTRADA AGUA	TUBE ENTRÉE EAU
13	411389	WATER INLET HOSE	TUBO ENTRADA AGUA	TUBE ENTREE EAU
14	427195	WATER INLET HOSE	TUBO ENTRADA AGUA	TUBE ENTREE EAU
15	429829	WATER INLET HOSE	TUBO ENTRADA AGUA	TUBE ENTREE EU
16	429837	WATER INLET HOSE	TUBO ENTRADA AGUA	TUBE ENTREE EAU
17	429852	WATER INLET HOSE	TUBO ENTRADA AGUA	TUBE ENTREE EAU
18	150227	BICR HEX NUT DIN934-8 M6	TUER.EX.DIN934-8 B.TRI.M 6	ECROU HEX DIN934-8 BICR.M6
19	333690	FIG. 243 MI 1/2" BRASS	FIGURA 243 MI DE 1/2" LATON	FIG. 243 MI 1/2" LAITON

info@zipnasklade.ru
8(800)500-69-51

Nº	REF	DENOMINATION	DENOMINACIÓN	DENOMINATION
20	333708	VALVE EV220A G12 042U4022	CUERPO VAL.EV220A G12 042U4022	VANNE EV220A G12 042U4022

info@zipnasklade.ru
8(800)500-69-51

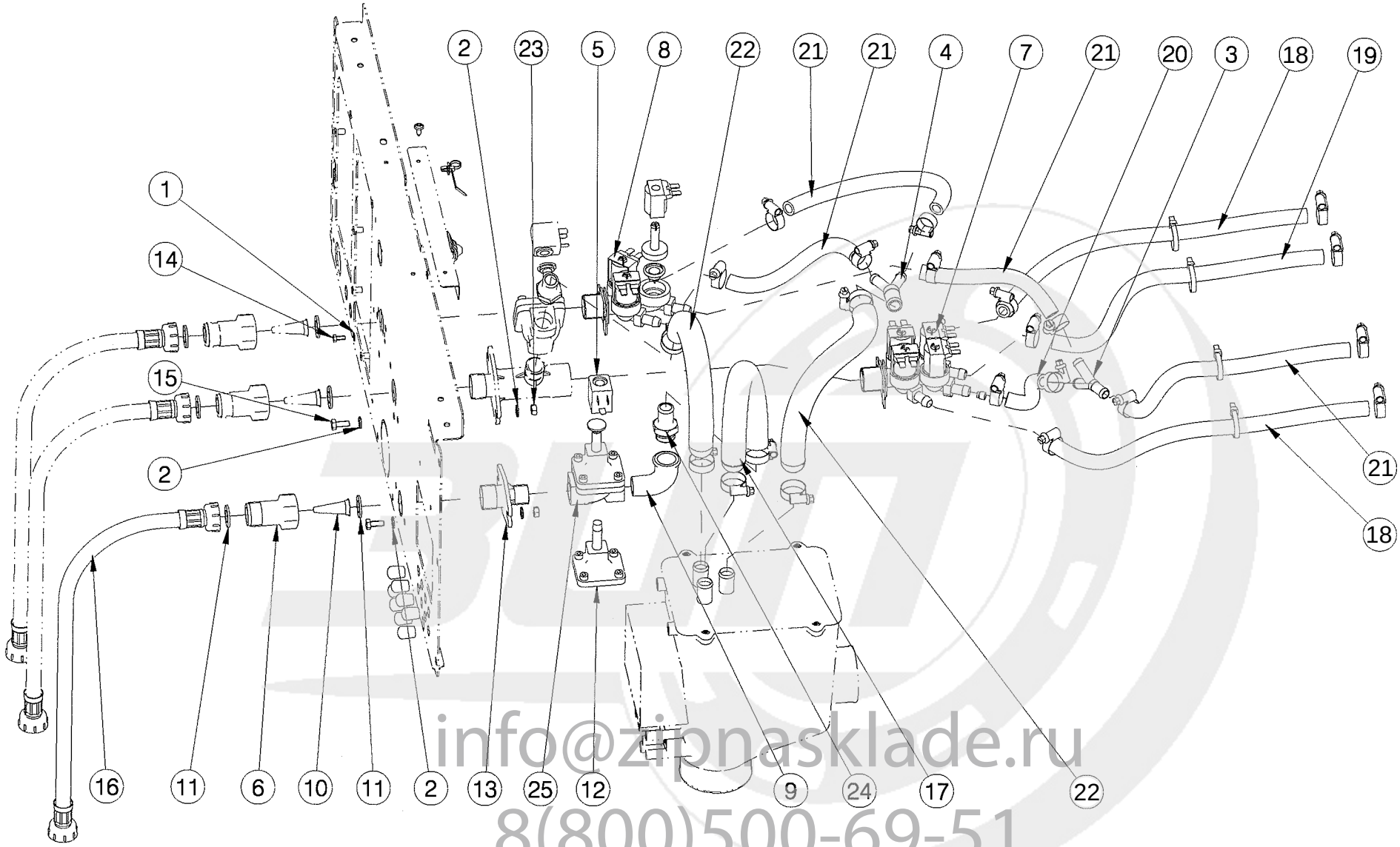

info@zipnasklade.ru
8(800)500-69-51

Nº	REF	DENOMINATION	DENOMINACIÓN	DENOMINATION
1	149476	BICR.WASHER B DIN125-ST 4,3	ARAN.B DIN125-ST B.TRI. 4,3	RONDELLE B DIN125-ST BICR.4,3
2	149526	BICR.WASHER B DIN125-ST 6,4	ARAN.B DIN125-ST B.TRI. 6,4	RONDELLE B DIN125-ST BICR.6,4
3	152165	BRANCH	BIFURCACION	BIFURCATION
4	321463	BRANCH OF 16-10,5-10,5	BIFURCACION DE 16-10,5-10,5	BIFURCATION DE 16-10,5-10,5
5	333716	COIL AB 5W 12V CC 042N0806	BOBINA AB 5W 12V CC 042N0806	BOBINE AB 5W 12V CC 042N0806
6	315317	FILTER BODY	CUERPO FILTRO	CORPS FILTRE
7	511212	4 TRACK ELECTROVALVE 389 180ºC	ELECTROV.CUADRUPLE 389 180º *	ELECTROVANNE 4 VOIES 389 180ºC
	156265	REGULATOR 3 L/MIN (BLACK)	REGULADOR DE 3 L/MIN. (NEGRO)	REGULATEUR 3 L/MIN (NOIR)
	510933	REGULATOR 4 L/MIN.RED	REGULADOR DE 4L/MIN.ROJO CLARO	REGULATEUR 4 L/MIN ROUGE
	300194	YELLOW CASE 30053	ESTUCHE AMARILLO 30053	BOITE JAUNE 30053
	300202	INTEGRAL GUIDE-MEMBRANE 30696	MEMBRANA-GUIA INTEGRAL 30696 *	MEMBRANE-GUIDE INTEGRALE 30696
	332296	COIL 255043000000 12VCC	BOBINA 255043000000 12VCC	BOBINE 255043000000 12VCC
8	333674	TRIPLE ELECTROVALVE 369 180º	ELECTROV.TRIPLE 369 180º12VCC*	ELECTROVANNE TRIPLE 369 180º
	300194	YELLOW CASE 30053	ESTUCHE AMARILLO 30053	BOITE JAUNE 30053
	300202	INTEGRAL GUIDE-MEMBRANE 30696	MEMBRANA-GUIA INTEGRAL 30696 *	MEMBRANE-GUIDE INTEGRALE 30696
	332296	COIL 255043000000 12VCC	BOBINA 255043000000 12VCC	BOBINE 255043000000 12VCC
9	129494	ELBOW FIG 92 1/2" GALV	FIGURA 92 DE 1/2"AMAT GALV.	COUDE FIG 92 1/2" GALV
10	315614	CONICAL FILTER REF.4008-2-1	FILTRO CONICO REF.4008-2-1	FILTRE CONIQUE REF.4008-2-1
11	114348	GASKET D24XD13,5X2	JUNTA MIFLEX D24X13, 5X2 EPDM WRC 400105	JOINT D24XD13,5X2
12	341685	SPARE-PARTS KIT EV220A 12-14B	KIT REPUES.EV220A 12-14B *	KIT RECHANGES EV220A 12-14B
13	338152	ELECTROVALVE BRACKET	SOPORTE ELECTROVALVULAS	SUPPORT ELECTROVANNES
14	146258	BIC.HEX SCREW DIN933-4.8 M4X10	TOR.EX.DIN933-4.8 B.TRI.M 4X10	VIS HEX DIN933-4.8 BICR.M 4X10
15	146233	BICR.HEX SCREW DIN933-8 M6X15	TOR.EX.DIN933-8.8 B.TRI.M 6X15	VIS HEX DIN933-8.8 BICR.M6X15
16	326587	WATER INLET AC DI12,5 L1,5M	TUBO ENTRADA AC DI12,5 L1,5M *	FLEXIBLE ENTRÉE AC DI12,5 L1,5
17	411199	WATER INLET HOSE	TUBO ENTRADA AGUA	TUBE ENTRÉE EAU
18	411389	WATER INLET HOSE	TUBO ENTRADA AGUA	TUBE ENTREE EAU
19	427195	WATER INLET HOSE	TUBO ENTRADA AGUA	TUBE ENTREE EAU
20	429829	WATER INLET HOSE	TUBO ENTRADA AGUA	TUBE ENTREE EU

info@zipnasklade.ru
8(800)500-69-51

Nº	REF	DENOMINATION	DENOMINACIÓN	DENOMINATION
21	429837	WATER INLET HOSE	TUBO ENTRADA AGUA	TUBE ENTREE EAU
22	429845	WATER INLET HOSE	TUBO ENTRADA AGUA	TUBE ENTREE EAU
23	150227	BICR HEX NUT DIN934-8 M6	TUER.EX.DIN934-8 B.TRI.M 6	ECROU HEX DIN934-8 BICR.M6
24	333690	FIG. 243 MI 1/2" BRASS	FIGURA 243 MI DE 1/2" LATON	FIG. 243 MI 1/2" LAITON
25	333708	VALVE EV220A G12 042U4022	CUERPO VAL.EV220A G12 042U4022	VANNE EV220A G12 042U4022
		THIRD WATER INLET KITS	KITS TERCERA ENTRADA AGUA	KITS TROISIEME ENTREE EAU
	793505	THIRD WATER INLET KIT	KIT TERCERA ENTRADA AGUA	KIT TROISIEME ENTREE EAU

info@zipnasklade.ru
8(800)500-69-51

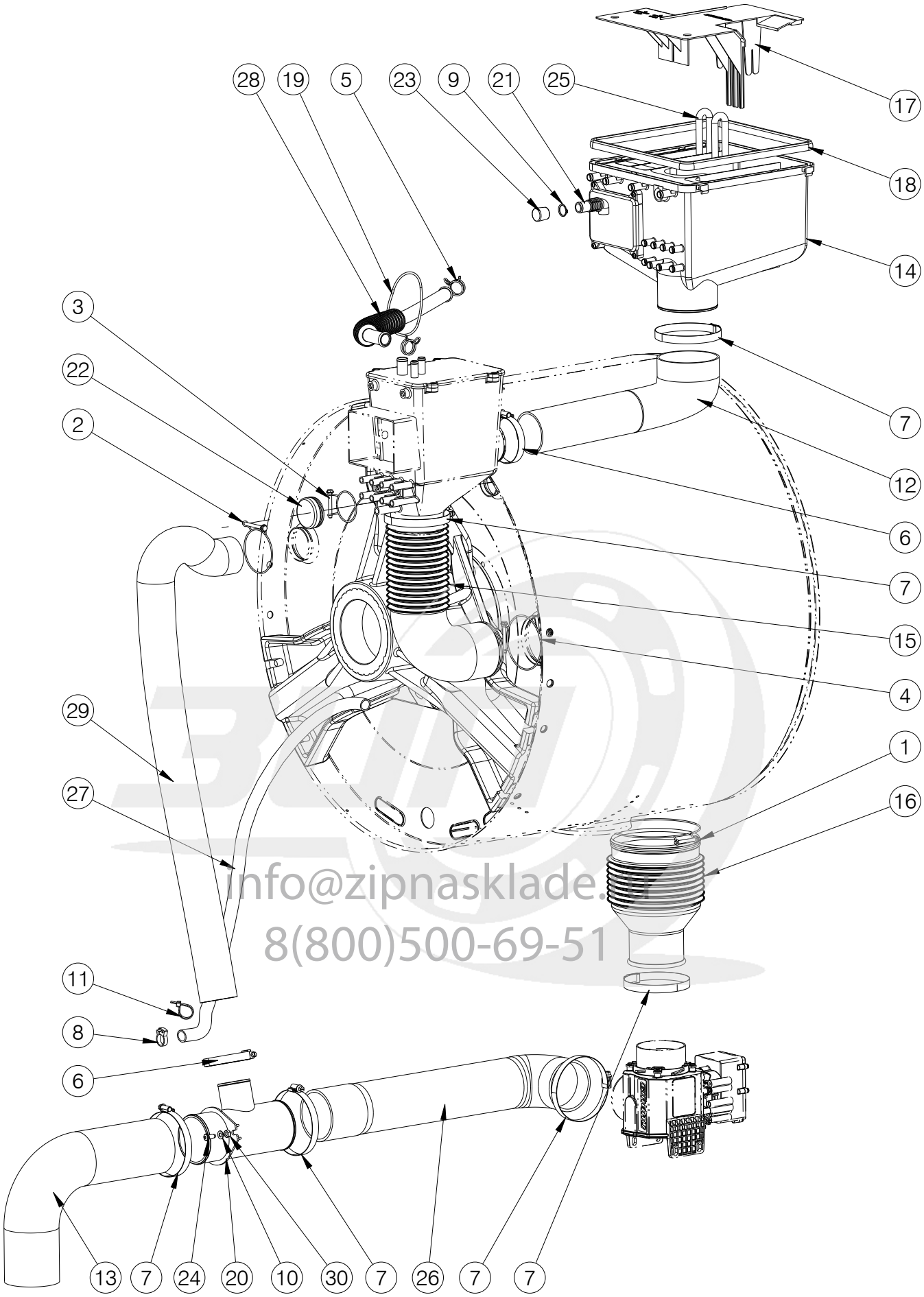

info@zipnasklade.
8(800)500-69-51

Nº	REF	DENOMINATION	DENOMINACIÓN	DENOMINATION
1	333450	WASHER D137XD2	ABRAZ.ALAMBRE D137XD2	RONDELLE D137XD2
2	340505	WASHER SWHCFS 5850	ABRAZ.ALAMBRE SWHCFS 5850	RONDELLE SWHCFS 5850
3	350439	WASHER SWHCFS 4942	ABRAZ.ALAMBRE SWHCFS 4942	RONDELLE SWHCFS 4942
4	333443	WASHER SWHCFS 8780	ABRAZ.ALAMBRE SWHCFS 8780	RONDELLE SWHCFS 8780
5	338897	CLAMP 20,2	ABRAZ. F.I.M. 20202 B20,2	BRIDE 20,2
6	132290	CLAMP 301730-8 D50-70	ABRAZADERA 301730-8 D50- 70	BRIDE 301730-8 D50-70
7	132340	CLAMP REF.30173380-2 D80-100	ABRAZADERA REF.30173380-2 D80-100	BRIDE REF.30173380-2 D80-100
8	323675	CLAMP NORMA 22HC0593	ABRAZADERA NORMA 22HC0593	COLLIER NORMA 22HC0593
9	131508	FLEXIBLE RING E-17 DIN 471	ANILLO ELASTICO E-17 DIN 471	BAGUE ELASTIQUE E-17 DIN 471
10	149526	BICR.WASHER B DIN125-ST 6,4	ARAN.B DIN125-ST B.TRI. 6,4	RONDELLE B DIN125-ST BICR.6,4
11	140525	CLAMP 2244-0	BRIDA UNEX 2244-0 *	BRIDE 2244-0
12	428110	RUBBER ELBOW 313X67	CODO GOMA 313 X 67	COUDE GOMME 313X67
13	163253	DRAIN OUTLET HOSE	TUBO SALIDA DESAGÜE	TUBE SORTIE VIDANGE
14	511576	SOAP DISPENSER SET	CONJUNTO DOSIFICADOR	ENSEMBLE BAC A PRODUITS
15	340943	OUTERDRUM COLLECTOR BELLOWS	FUELLE COLECTOR ENVOLVENTE	DURITE COLLECTEUR CUVE
16	333500	OUTERDRUM DRAIN BELLOWS	FUELLE DESAGÜE ENVOLVENTE	DURITE VIDANGE CUVE
17	344101	SOAP DOSING INSERTO (EH030) (COIN CTRL MODELS ONLY)	INSERTO DOSIFICADOR (EH030) (PARA MODELOS A COIN CONTROL)	INSERTO BAC A PRODUITS (EH030) (POUR MODELE COIN CONTROL)
18	321430	SOAP DISPENSER GASKET	JUNTA DOSIFICADOR	JOINT BACS A PRODUITS
19	159681	TORIC GASKET 50X56X3 RE.2676	JUNTA TORICA 50X56X3 RE.2676	JOINT TORIQUE 50X56X3 REF.2676
20	333575	DRAIN SLEEVE	MANGUITO DESAGÜE	FRETTE VIDANGE
21	321349	WATER INLET RACCORD	RACOR ENTRADA AGUA DIRECTA	RACCORD ENTREE EAU
22	349902	RUBBER PLUG D42	TAPON GOMA D42	BOUCHON GOMME D42
23	156687	CONICAL END-PIECE R-16 D16	TOPE CONICO REPRIMSA R-16 D16	ARRET CONIQUE R-16 D16
24	333625	SCREW T25 A18EST.M6X15 TRI.	TOR.ALOM.T25 A18EST.M6X15 TRI.(ESPECIAL)	VIS T25 A18EST.M6X15 TRI.
25	339598	ASPIRATION HOSE	TUBO ASPIRACION	TUBE ASPIRATION
26	343889	DRAIN HOSE	TUBO DESAGUE	TUBE VIDANGE
27	283820	BEARING BOX DRAIN HOSE	TUBO DESAGÜE CAJA COJINETES	TUBE VIDANGE BOITE ROULEMENTS

info@zipnasklade.ru
8(800)500-69-51

Nº	REF	DENOMINATION	DENOMINACIÓN	DENOMINATION
28	338889	VAPOUR OUTLET HOSE	TUBO DESVAPORIZADOR	TUBE SORTIE CONDENSATS
29	427419	OVERFLOW HOSE	TUBO REBOSADERO	TUBE DEVERSOIR
30	176834	SELF-LOCKING NUT DIN985-8 B.TRI.M6	TUER.AUTOBL.DIN985-8 B.TRI.M6	ECROU AUTOBLOCANT DIN985-8 B.TRI.M6
		SECOND DRAIN KIT	KIT 2º DESAGÜE	KIT DEUXIEME VIDANGE
	796854	2 DRAIN KIT HS-6IC	KIT 2º DESAGÜE HS-6IC	KIT 2 VIDANGE HS-6IC
		WITHOUT ILLUSTRATION	SIN ILUSTRACION	SANS ILLUSTRATION
	796870	SIPHON CLEANING KIT	KIT LIMPIEZA SIFONES	KIT NETTOYAGE SIPHON

info@zipnasklade.ru
8(800)500-69-51

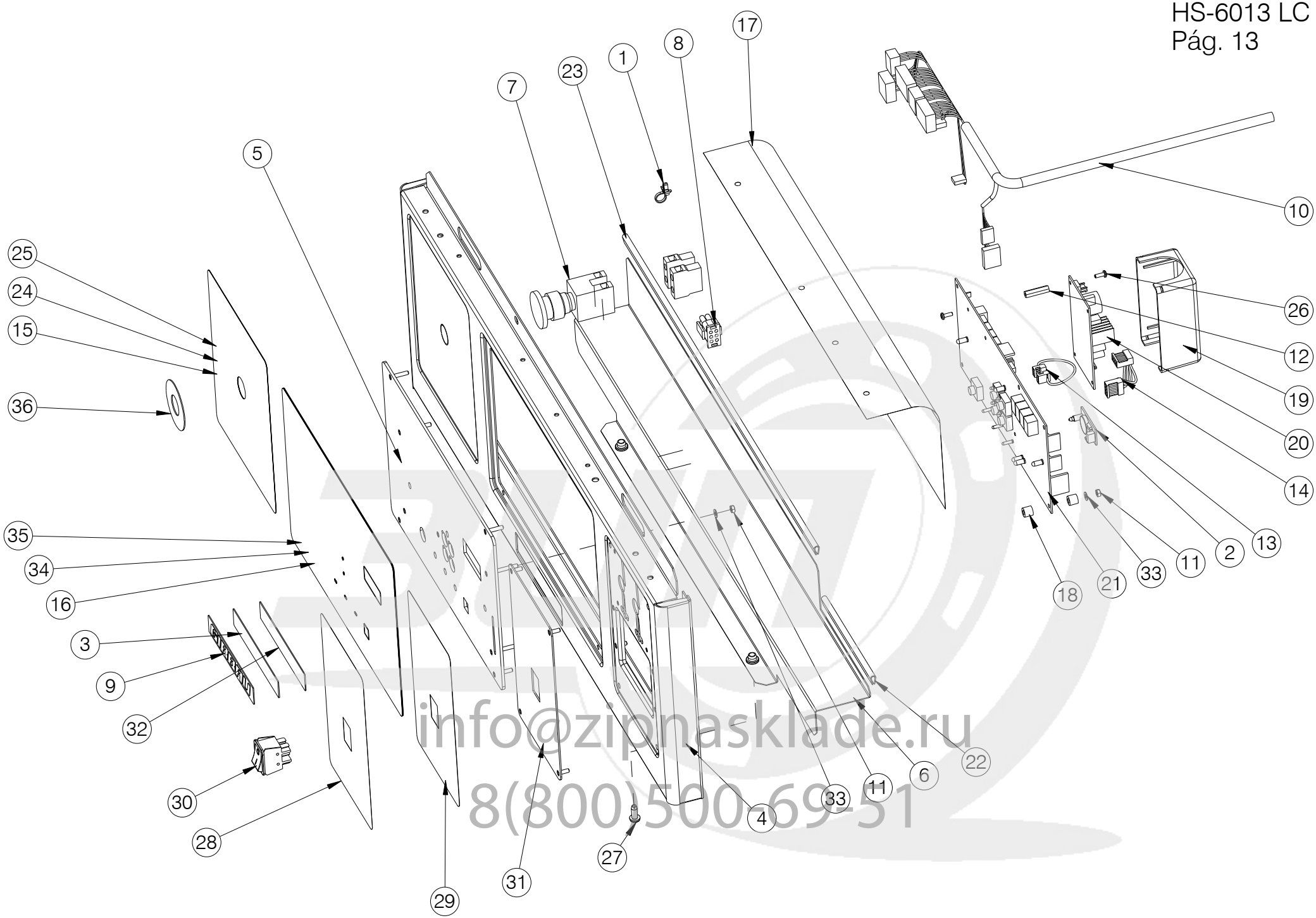

info@zipnasklade.ru
8(800)500-69-51

Nº	REF	DENOMINATION	DENOMINACIÓN	DENOMINATION
1	326132	CABLE TIE Ø35 NATURAL	ABRAZADERA Ø35 NATURAL	BRIDE Ø35 NATUREL
2	322677	CLOCK CIRCUIT	CIRCUITO RELOJ	CIRCUIT HORLOGE
3	326082	PLATE CONTINENTAL GIRBAU	PLACA CONTINENTAL GIRBAU	PLAQUE CONTINENTAL GIRBAU
	10065415	PLATE POSEIDON	PLACA POSEIDON	PLAQUE POSEIDON
4	10592343	CONTROL PANEL	PANEL DE MANDOS	PANNEAU DE COMMANDES
5	594804	CONTROL PANEL PLATE	PLACA PANEL DE MANDOS	PLAQUE PANNEAU DE COMMANDES
6	432518	CONTROL PANEL PROFILE	PERFIL PANEL DE MANDOS	PROFILE TABLEAU DE COMMANDES
7	341529	EMERGENCY STOP LC	PARO EMERGENCIA LC	ARRET EMERGENCE LC
8	342006	EMERGENCY STOP PLUG	CONECTORA PARO EMERGENCIA	CONNECTEUR ARRET EMERGENCE
9	326074	PLATE GIRBAU	PLACA GIRBAU	PLAQUE GIRBAU
10	343509	HARNESS	CABLEADO ELECTRICO	CABLAGE
11	150185	BICR.HEX.NUT DIN934-8 M4	TUER.EX.DIN934-8 B.TRI.M 4	ECROU HEX.DIN934-8 BICR.M4
12	322685	SEPARATOR HEX.HS6-8	SEPARADOR EXAGONAL HS6-8	SEPARATEUR HEX. HS6-8
13	432435	IDENTIFICATION PLUG	CONECTORA IDENTIFICACION	CONNECTEUR IDENTIFICATION
14	342451	INSTALLATION PLUG	CONECTORA INSTALACION	CONNECTEUR INSTALLATION
15	10699163	LABEL	ETIQUETA	ÉTIQUETTE
16	10034825	LC WASHER KEYBOARD	TECLADO LAVADORA LC	CLAVIER LAVEUSE LC
17	432310	MICRO BOARD PROTECTION	PROTECCION PLACA MICRO	PROTECTION PLAQUE MICRO
18	322768	MICRO BOARD SEPARATOR	SEPARADOR PLACA MICRO	SEPARATEUR PLAQUE MICRO
19	326843	MICROPROCESSOR PLATE COVER	TAPA PLACA MICROPROCESADOR	COUVERCLE PLAQUE MICROPROSSEUR
20	332718	POWER SOURCE MW PS-25-12	FUENTE ALIMENT.MW PS-25-12	FONT ALIMENT.MW PS-25-12
21	594507	MICROP. BOARD H6013/17 LC/CC	PLACA MICROP.H6013/17 LC/CC	PLAQUE MICROP. H6013/17 LC/CC
22	192021	PROFILE	ENCUADERNADOR P (NEGRO) 2MT.	PROFILE
23	192021	PROFILE	ENCUADERNADOR P (NEGRO) 2MT.	PROFILE
24	338020	SAFETY INSTR.LABEL EN (FOR USA AND CANADA ONLY)	ETIQUETA INSTR. SEGURIDAD EN (SOLO PARA USA Y CANADA)	ETIQUETTE INSTR.SECURITE EN (SEULEMENT POUR USA ET CANADA)
25	343046	SAFETY INSTR.LABEL JA (JAPENESE)	ETIQUETA INSTR. SEGURIDAD JA (JAPONES)	ETIQUETTE INSTR.SECURITE JA (JAPONAIS)
26	322693	SCREW PT KN35X10 WN1412	TORNILLO PT KN35X10 WN1412 (ESPECIAL)	VIS PT KN35X10 WN1412

info@zipnasklade.ru
8(800)500-69-51

Nº	REF	DENOMINATION	DENOMINACIÓN	DENOMINATION
27	333294	SCREW T25 AR.18ESTR.M 6X15 INOX	TORNILLO ALOM.T25 M 6X15 INOX(ESPECIA	VIS T25 AR.18ESTR.M 6X15 INOX
28	587816	START-STOP LABEL	ETIQUETA MARCHA-PARO	ETIQUETTE MARCHE-ARRET
29	590356	START-STOP LABEL JA (JAPENESE)	ETIQUETA MARCHA-PARO JA (JAPONES)	ETIQUETTE MARCHE-ARRET JA (JAPONAIS)
30	587519	SWITCH C1550AL	INTERRUPTOR C1550AL	INTERRUPTEUR C1550AL
31	422998	SWITCH PLATE	PLACA INTERRUPTOR	PLAQUE INTERRUPTEUR
32	327023	PLATE VIKING	PLACA VIKING	PLAQUE VIKING
33	149476	BICR.WASHER B DIN125-ST 4,3	ARAN.B DIN125-ST B.TRI. 4,3	RONDELLE B DIN125-ST BICR.4,3
34	303719	WASHER-EXTRACTOR PLATE LC EN (FOR USA AND CANADA ONLY)	CARATULA LAVADORA LC EN (SOLO PARA USA Y CANADA)	PLAQUE LAVEUSE LC EN (SEULEMENT POUR USA ET CANADA)
35	342865	WASHER-EXTRACTOR PLATE LC JA (JAPENESE)	CARATULA LAVADORA LC JA (JAPONES)	PLAQUE LAVEUSE LC JA (JAPONAIS)
36	192294	YELLOW RING	ARO AMARILLO	BAGUE JAUNE

info@zipnasklade.ru
8(800)500-69-51

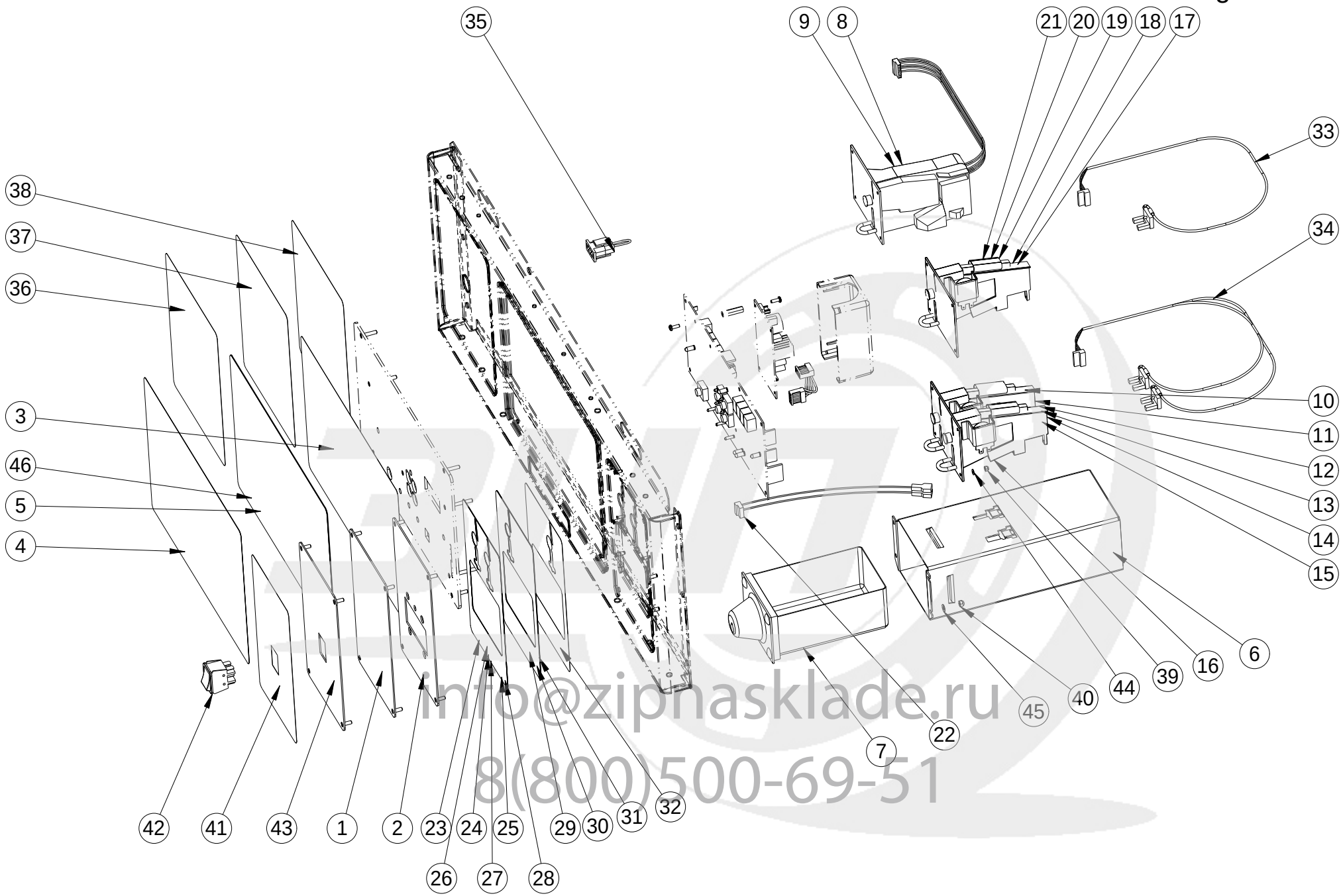

info@zipnasklade.ru
8(800)500-69-51

Nº	REF	DENOMINATION	DENOMINACIÓN	DENOMINATION
1	428656	BLIND PLATE	PLACA CIEGA	PLAQUE AVEUGLE
2	433532	CARD READER PLATE	PLACA LECTOR TARJETA	PLAQUE LECTEUR CARTE
3	593517	COIN CONTROL EXTRA OP. WASHER KEYBOARD (FOR PROFITPLUS CONTROL MOD.) (FOR USA AND CANADA ONLY)	TECLADO LAVADORA CC EXTRA OP. (PARA MOD. PROFITPLUS CONTROL) (SOLO PARA USA Y CANADA)	CLAVIER LAVEUSE COIN CONTROL EXTRA OP. (POUR MOD. PROFITPLUS CONTROL) (SEULEMENT POUR USA ET CANADA)
4	10065480	CC EXTRA OP. WASHER KEYBOARD (FOR PROFITPLUS CONTROL MOD.)	TECLADO LAVADORA CC EXTRA OP. (PARA MOD. PROFITPLUS CONTROL)	CLAVIER LAVEUSE CC EXTRA OP. (POUR MOD. PROFITPLUS CONTROL)
5	10017002	CC WASHER KEYBOARD	TECLADO LAVADORA CC	CLAVIER LAVEUSE CC
6	322313	COIN BOX SUPPORT	APOYO CAJON MONEDAS	APPUI BOITE MONNAIE
7	169169	COIN BOX UG400A GI	CAJA MONEDAS UG400A GI *	BOITE MONNAIE UG400A GI
8	327353	COIN-METER EMP 500 EUROS	MONEDERO EMP 500 EUROS	MANNAYEUR EMP 500 EUROS
9	411223	COIN-METER EMP 500 NOT EUROS	MONEDERO EMP 500 NO EUROS	MONNAYEUR EMP 500 NO EUROS
10	323741	COIN-METER F60.1 0,20/2,00EUR	MONEDERO F60.1 0,20/2,00EUR	MONNAYEUR F60.1 0,20/2,00EUR
11	326892	COIN-METER F60.1 0,25/1,00CAD	MONEDERO F60.1 0,25/1,00CAD	MONNAYEUR F60.1 0,25/1,00CAD
12	323659	COIN-METER F60.1 0,25/1,00USD	MONEDERO F60.1 0,25/1,00USD	MONNAYEUR F60.1 0,25/1,00USD
13	326769	COIN-METER F60.1 0,50/1,00 GBP	MONEDERO F60.1 0,50/1,00GBP *	MONNAYEUR F60.1 0,50/1,00 GBP
14	326835	COIN-METER F60.1 1,00/5,00ILS	MONEDERO F60.1 1,00/5,00ILS *	MONNAYEUR F60.1 1,00/5,00 ILS
15	431007	COINMETER F60.1 100/500 JPY	MONEDERO F60.1 100/500 JPY *	MONNAYEUR F60.1 100/500 JPY
16	354035	COINMETER F60.1 10/50 NTD	MONEDERO F60.1 10/50NTD *	MONNAYEUR F60.1 10/50 NTD
17	524157	COIN-METER F60.11 500 WON	MONEDERO F60.11 500 WON*	MONNAYEUR F60.11 500 WON
18	323642	COIN-METER F60.11 0,25USD	MONEDERO F60.11 0,25USD	MONNAYEUR F60.11 0,25USD
19	326777	COIN-METER F60.11 100YEN	MONEDERO F60.11 100YEN *	MONNAYEUR F60.11 100YEN
20	344622	COIN-METER F60.11 10NTD	MONEDERO F60.11 10NTD *	MONNAYEUR F60.11 10NTD
21	323733	COIN-METER F60.11W2000-TOKEN G	MONEDERO F60.11 FICHA GIRBAU *	MONNAYEUR F60.11W2000 JETON GI
22	411678	COIN-METER PLUG (WITH PUSH-BUTTON)	CONECTORA MONEDERO (CON PULSADOR)	CONNECTEUR MONNAYEUR (AVEC BOUTON-POUSSOIR)
23	339325	COINMETER LABEL CC-MD EUR	ETIQUETA MONEDERO CC-MD EUR	ETIQUETTE MONNAYEUR CC-MD EUR
24	339507	COINMETER LABEL CC-MD GBP	ETIQUETA MONEDERO CC-MD GBP	ETIQUETTE MONNAYEUR CC-MD GBP
25	339515	COINMETER LABEL CC-MD NIS	ETIQUETA MONEDERO CC-MD NIS	ETIQUETTE MONNAYEUR CC-MD NIS
26	354043	COINMETER LABEL CC-MD NTD	ETIQUETA MONEDERO CC-MD NTD	ETIQUETTE MONNAYEUR CC-MD NTD

info@zipnasklade.ru
8(800)500-69-51

Nº	REF	DENOMINATION	DENOMINACIÓN	DENOMINATION
27	339499	COINMETER LABEL CC-MD USD	ETIQUETA MONEDERO CC-MD USD	ETIQUETTE MONNAYEUR CC-MD USD
28	342550	COINMETER LABEL CC-MD YEN	ETIQUETA MONEDERO CC-MD YEN	ETIQUETTE MONNAYEUR CC-MD YEN
29	339564	COINMETER LABEL CC-MS YEN	ETIQUETA MONEDERO CC-MS YEN	ETIQUETTE MONNAYEUR CC-MS YEN
30	339549	COINMETER LABEL CC-MS-25C	ETIQUETA MONEDERO CC-MS-25C	ETIQUETTE MONNAYEUR CC-MS-25C
31	339523	COINMETER LABEL CC-MS-FG	ETIQUETA MONEDERO CC-MS-FG	ETIQUETTE MONNAYEUR CC-MS-FG
32	339234	COINMETER LABEL CC-MU	ETIQUETA MONEDERO CC-MU	ETIQUETTE MONNAYEUR CC-MU
33	322461	COIN-METER 1 PLUG	CONECTORA 1 MONEDERO	CONNECTEUR 1 MONNAYEUR
34	322453	COIN-METER 2 PLUG	CONECTORA 2 MONEDERO	CONNECTEUR 2 MONNAYEURS
35	341990	EMERGENCY STOP PLUG	CONECTORA PARO EMERGENCIA	CONNECTEUR ARRET EMERGENCE
36	10568681	LABEL	ETIQUETA	ÉTIQUETTE
37	303693	SAFETY INSTR.LABEL EN (FOR USA AND CANADA ONLY)	ETIQUETA INSTR. SEGURIDAD EN (SOLO PARA USA Y CANADA)	ETIQUETTE INSTR.SECURITE EN (SEULEMENT POUR USA ET CANADA)
38	343053	SAFETY INSTR.LABEL JA (JAPENESE)	ETIQUETA INSTR. SEGURIDAD JA (JAPONES)	ETIQUETTE INSTR.SECURITE JA (JAPONAIS)
39	129692	SELF-LOCKING NUT DIN985-8 B.TRI.M 3	TUER.AUTOBL.DIN985-8 B.TRI.M 3	ECROU AUTOBLOCANT DIN985-8 B.TRI.M 3
40	132043	SELF-LOCKING NUT DIN985-8 B.TRI.M 4	TUER.AUTOBL.DIN985-8 B.TRI.M 4	ECROU AUTOBLOCANT DIN985-8 B.TRI.M 4
41	429878	START-STOP LABEL CP (WITH PUSH-BUTTON)	ETIQUETA MARCHA-PARO CP (CON PULSADOR)	ETIQUETTE MARCHE-ARRET CP (AVEC BOUTON-POUSSOIR)
42	138339	PUSH-BUTTON C6061AL (WITH PUSH-BUTTON)	PULSADOR C6061AL * (CON PULSADOR)	BOUTON-POUSSOIR C6061AL (AVEC BOUTON-POUSSOIR)
43	422998	SWITCH PLATE	PLACA INTERRUPTOR	PLAQUE INTERRUPTEUR
44	149484	WASHER DIN 125B M3 ST TRIVALENT	ARANDELA DIN 125B M3 ST TRIVALENTE	RONDELLE DIN 125B M3 ST TRIVALENT
45	149476	BICR.WASHER B DIN125-ST 4,3	ARAN.B DIN125-ST B.TRI. 4,3	RONDELLE B DIN125-ST BICR.4,3
46	342857	WASHER-EXTRACTOR PLATE CC JA (JAPENESE)	CARATULA LAVADORA CC JA (JAPONES)	PLAQUE LAVEUSE CC JA (JAPONAIS)

info@zipnasklade.ru
8(800)500-69-51

Nº	REF	DENOMINATION	DENOMINACIÓN	DENOMINATION
		WITHOUT ILLUSTRATION	SIN ILUSTRACION	SANS ILLUSTRATION
	796839	VENDING VN SERIE 6 SET	KIT VENDING VN SERIE 6	KIT VENDING VN SERIE 6
	614503	KIT PROFIT PLUS HS-6013/17 (EXCEPT FOR USA AND CANADA)	KIT PROFIT PLUS HS-6013/17 (EXCEPTO PARA USA Y CANADA)	KIT PROFIT PLUS HS-6013/17 (SAUF POUR USA ET CANADA)
	639088	KIT PROFIT PLUS HS-6013/17 KO (ONLY KOREA)	KIT PROFIT PLUS HS-6013/17 KO (SOLO COREA)	KIT PROFIT PLUS HS-6013/17 KO (SEULEMENT CORÉE)
	609123	KIT PROFIT PLUS EH030/40 (FOR USA AND CANADA ONLY)	KIT PROFIT PLUS EH030/40 (SOLO PARA USA Y CANADA)	KIT PROFIT PLUS EH030/40 (SEULEMENT POUR USA ET CANADA)

info@zipnasklade.ru
8(800)500-69-51

HS-6013 IC
Pág. 15

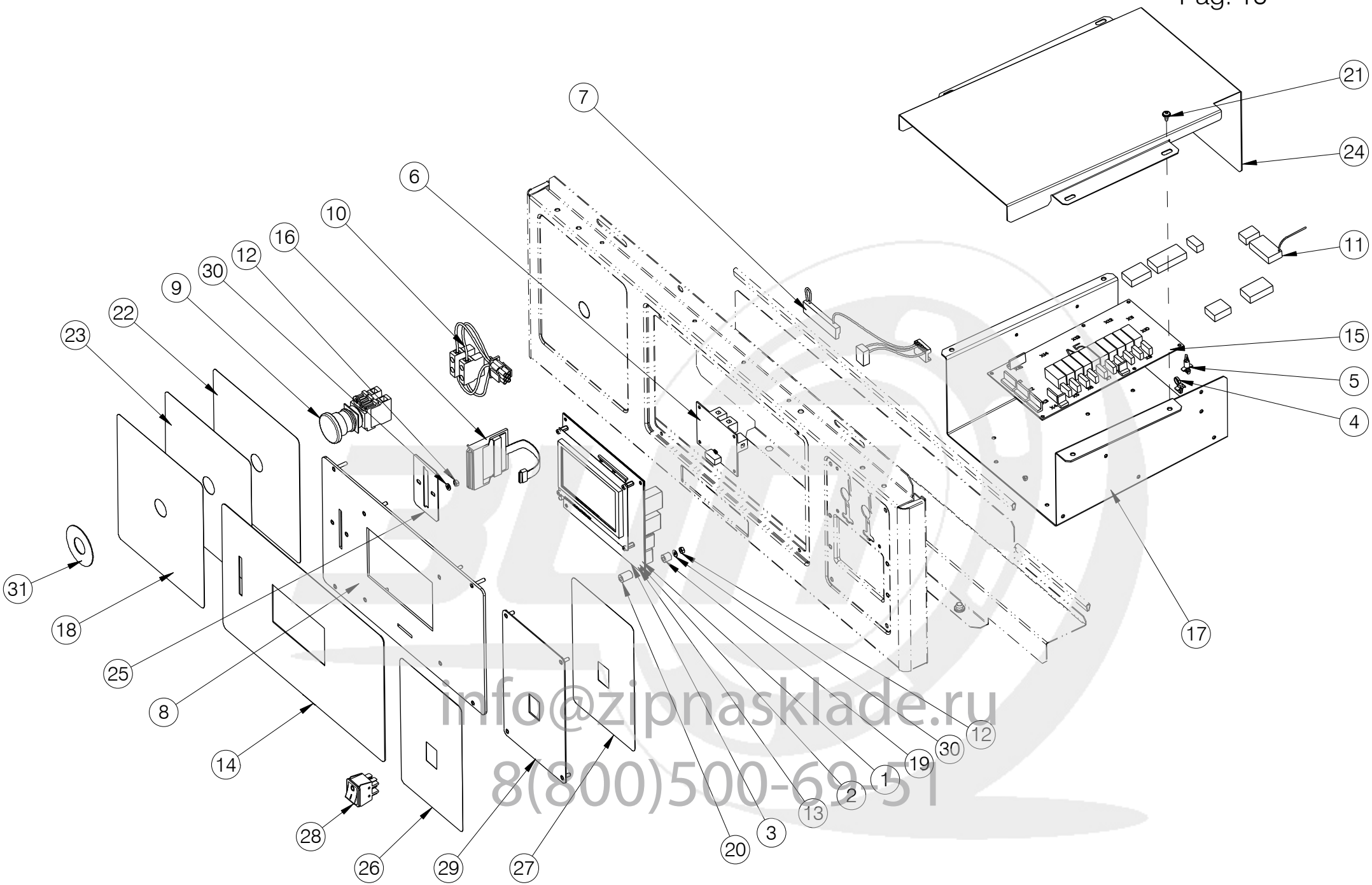

info@zipnasklade.ru
8(800)500-69-51

Nº	REF	DENOMINATION	DENOMINACIÓN	DENOMINATION
1	10080315	MICROPROCESSOR BOARD IC ADVANCE	PLACA MICROPROCESADOR IC ADVANCE	CARTE MICROPROCESSEUR IC ADVANCE
2	10240547	MICROPROCESSOR BOARD IC ALLWET	PLACA MICROPROCESADOR IC ALLWET	CARTE MICROPROCESSEUR IC ALLWET
3	10128981	MICROPROCESSOR BOARD IC AQUATOUCH	PLACA MICROPROCESADOR IC AQUATOUCH	CARTE MICROPROCESSEUR IC AQUATOUCH
4	326132	CABLE TIE Ø35 NATURAL	ABRAZADERA Ø35 NATURAL	BRIDE Ø35 NATUREL
5	332809	CIRCUIT BRACKET LCBS-4-7-01	SOPORTE CIRCUITO LCBS-4-7-01	SUPPORT CIRCUIT LCBS-4-7-01
6	565895	COMMUNICATION BOARD COM-C *	PLACA COMUNICACIONES COM-C *	PLAQUE COMMUNICATIONS COM-C/609164
7	432443	CONNECTION INST.ELEC. A1-A5	INST. ELEC. CONEXION A1-A5	INST.ELEC.CONNEXION A1-A5
8	429902	CONTROL PANEL PLATE	PLACA PANEL DE MANDOS	PLAQUE PANNEAU DE COMMANDE
9	341511	EMERGENCY STOP IC	PARO EMERGENCIA IC	ARRET EMERGENCE IC
10	342014	EMERGENCY STOP PLUG	CONECTORA PARO EMERGENCIA	CONNECTEUR ARRET EMERGENCE
11	343558	HARNESS	CABLEADO ELECTRICO	CABLAGE
12	150185	BICR.HEX.NUT DIN934-8 M4	TUER.EX.DIN934-8 B.TRI.M 4	ECROU HEX.DIN934-8 BICR.M4
13	437434	SCREEN KIT LCD IC	CONJUNTO PANTALLA LCD IC	ENSEMBLE ÉCRAN LCD IC
14	338046	IC WASHER EXTRACTOR KEYBOARD	TECLADO LAVADORA IC	CLAVIER MACHINE A LAVER IC
15	353326	INTELI LABEL E/S-1/D	PLACA INTELI E/S-1/D	PLAQUE INTELI E/S-1/D
16	332684	INTELI SMARTCARD SOCKET	ZOCALO TARJETA INTELI *	SOCLE TARGETTE SMARTCARD INTEL
17	428185	IRONING STRAP E/S 1A	PLANCHA SOPORTE E/S 1A	BANDE REPASSAGE E/S 1A
18	10699163	LABEL	ETIQUETA	ÉTIQUETTE
19	322768	MICRO BOARD SEPARATOR	SEPARADOR PLACA MICRO	SEPARATEUR PLAQUE MICRO
20	338038	MICRO BOARD SPACER	SEPARADOR PLACA MICRO	SEPARATEUR PLAQUE MICRO
21	183400	PLATE SCREW ST-4, 20 P.F. C/AL.T25	TORNILLO CHAPA ST-4 (ESPECIAL)*	VIS PLAQUE ST-4, 20 P.F. C/AL.T25
22	338020	SAFETY INSTR.LABEL EN (FOR USA AND CANADA ONLY)	ETIQUETA INSTR. SEGURIDAD EN (SOLO PARA USA Y CANADA)	ETIQUETTE INSTR.SECURITE EN (SEULEMENT POUR USA ET CANADA)
23	343046	SAFETY INSTR.LABEL JA (JAPENESE)	ETIQUETA INSTR. SEGURIDAD JA (JAPONES)	ETIQUETTE INSTR.SECURITE JA (JAPONAIS)
24	428193	SET COVER E/S 1A	TAPA CONJUNTO E/S 1A	COUVERCLE ENSEMBLE E/S 1A
25	423020	CARD FIXING-PIECE SMARTCARD	FIJACION TARJETA SMARTCARD	FIXATION TARGETTE SMARTCARD
26	587816	START-STOP LABEL	ETIQUETA MARCHA-PARO	ETIQUETTE MARCHE-ARRET
27	590356	START-STOP LABEL JA (JAPENESE)	ETIQUETA MARCHA-PARO JA (JAPONES)	ETIQUETTE MARCHE-ARRET JA (JAPONAIS)

info@zipnasklade.ru
8(800)500-69-51

Nº	REF	DENOMINATION	DENOMINACIÓN	DENOMINATION
28	587519	SWITCH C1550AL	INTERRUPTOR C1550AL	INTERRUPTEUR C1550AL
29	422998	SWITCH PLATE	PLACA INTERRUPTOR	PLAQUE INTERRUPTEUR
30	149476	BICR.WASHER B DIN125-ST 4,3	ARAN.B DIN125-ST B.TRI. 4,3	RONDELLE B DIN125-ST BICR.4,3
31	192294	YELLOW RING	ARO AMARILLO	BAGUE JAUNE
		WITHOUT ILLUSTRATION	SIN ILUSTRACION	SANS ILLUSTRATION
	529321	INTELI IMTX PACK	PACK INTELI IMTX	PACK INTELI IMTX

info@zipnasklade.ru
8(800)500-69-51

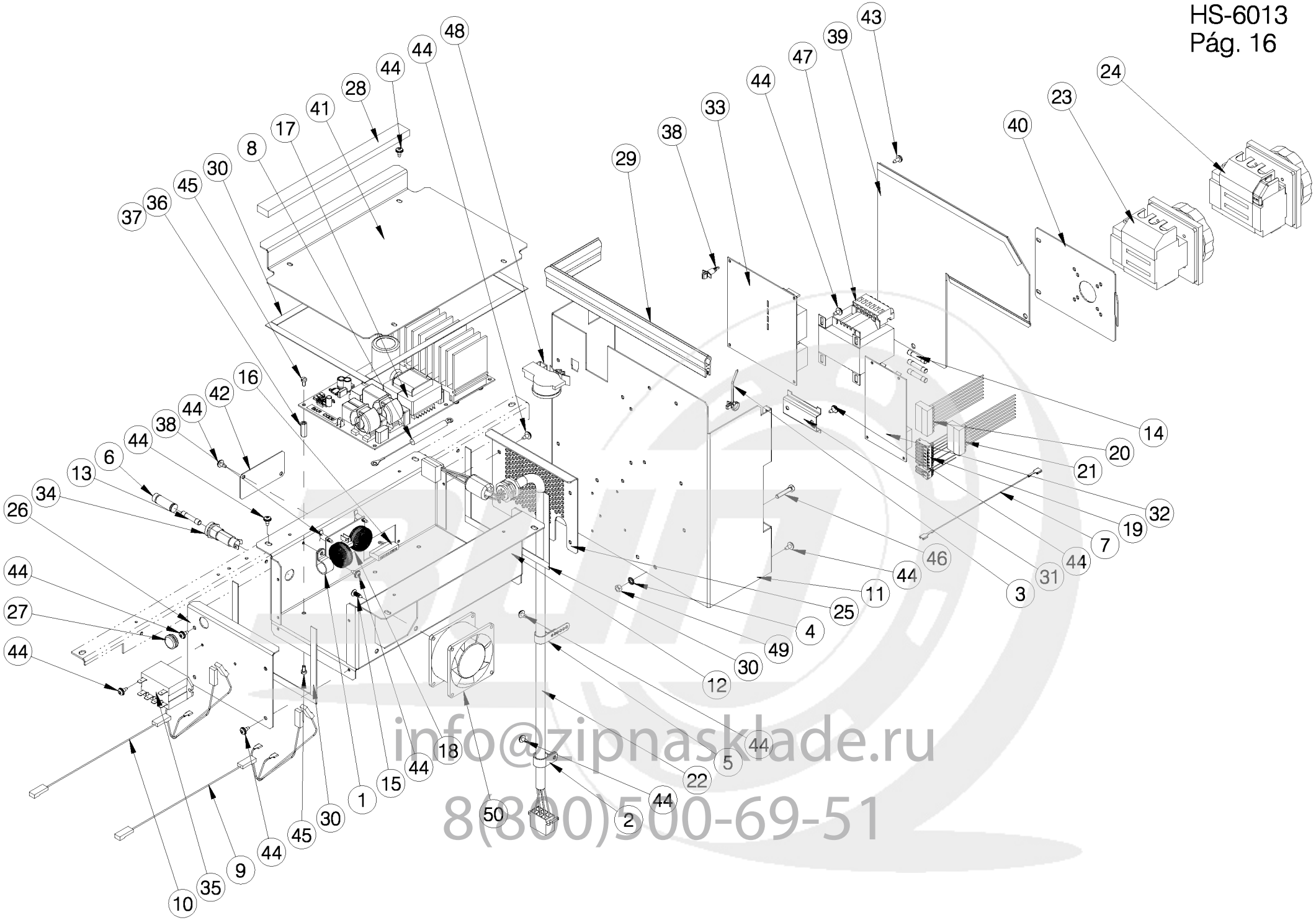

info@zipnasklade.ru
8(800)500-69-51

Nº	REF	DENOMINATION	DENOMINACIÓN	DENOMINATION
1	323055	ALUMINIUM CLAMP AL2	ABRAZADERA ALUMINIO AL2	BRIDE ALUMINIUM AL2
2	332957	ALUMINIUM WASHER AL9	ABRAZADERA ALUMINIO AL9	RONDELLE ALUMINIUM AL9
3	326132	CABLE TIE Ø35 NATURAL	ABRAZADERA Ø35 NATURAL	BRIDE Ø35 NATUREL
4	149724	BICR EXT.TOOT.WASH.DIN6798 M5	ARAN.DEN.EXT.B.TRI.DIN6798M 5	RONDEL DEN.EX.BICR.DIN6798 M5
5	140418	CLAMP UNEX REF 1201	BRIDA UNEX 1201	BRIDE UNEX REF 1201
6	137661	BAYONET HEAD	CABEZA BAYONETA FEK.031.1613	TETE BAYONETTE
7	430231	EXTERNAL DOSING WIRE (EH030)	CABLE DOSIFICACION EXT. (EH030)	CABLE DOSAGE EXTERNE (EH030)
8	453548	FILTER WIRE CEM (EH030)	CABLE FILTRO CEM (EH030)	CABLE FILTRE CEM (EH030)
9	341818	CONVERTER WIRES (EH030)	CABLES CONVERTIDOR (EH030)	CABLES CONVERTISSEUR (EH030)
10	344358	CONVERTER WIRES (HS-6013)	CABLES CONVERTIDOR (HS-6013)	CABLES CONVERTISSEUR (HS-6013)
11	431098	POWER INLET BOX	CAJA ENTRADA CORRIENTE	BOITE ENTREE COURANT
12	431049	VARIATOR BOX	CAJA VARIADOR	BOITE VARIATEUR
13	339127	FUSE SPT 0001.2534 10A	CART.FUSIB.SPT 0001.2534 10A *	CARTOUCHE SPT 0001.2534 10A
14	321125	FUSE SPT 1 A	CART.FUSIB.SPT 0001.2524 1 A*	CARTOUCHE FUS. SPT 1 A
15	348540	CLIP UNDER PRESSURE	CLIP A PRESION *	CLIP A PRESSION
16	432427	CONVERTER PLUG	CONECTORA CONVERTIDOR	CONNECTEUR CONVERTISSEUR
17	537068	FREQ.INVERTER DANFOSS 1800W	CONVERTIDOR FREC.DANFOSS 1800W	(650903) CONVERTISSEUR FREQ.DANFOSS1800W
18	344325	EMC AUXILIARY FILTER	FILTRO EMC AUXILIAR	FILTRE EMC AUXLIAIRE
19	522102	ELECTROVALVE ELEC.INST. (FOR MOD. LOGI/COIN CONTROL)	INST. ELEC. ELECTROVALVULAS (PARA MOD. LOGI/COIN CONTROL)	INST. ELEC. ELECTROVANNES (POUR MOD. LOGI/COIN CONTROL)
20	342600	ELEC.INST. WITHOUT TRANSFORMER (EH030)	INST. ELEC. SIN TRANSFORMADOR (EH030)	INST.ELEC.SANS TRANSFORMATEUR (EH030)
21	341867	TRANSFORMER ELEC.INST. (HS-6013)	INST. ELEC. TRANSFORMADOR (HS-6013)	INST.ELEC.TRANSFORMATEUR (HS-6013)
22	341842	MOTOR ELEC.INST.	INST. ELEC. MOTOR	INST.ELEC.MOTEUR
23	344176	SECTION SWITCH 32A (FOR MOD. HOT WATER/STEAM) (MOD.THREE-PHASE ELEC.HEATING)	INTERRUPTOR SECCIONADOR 32A (PARA MOD.AGUA CALIENTE/VAPOR) (MOD.CALEFAC. ELEC. TRIFASICA)	INTERRUPTEUR SECTIONNEUR 32A (POUR MOD.EAU CHAUDE/VAPEUR) (MOD.CHAUFAGE ELEC. TRIPHASE)

info@zipnasklade.ru
8(800)500-69-51

Nº	REF	DENOMINATION	DENOMINACIÓN	DENOMINATION
24	344168	SECTION SWITCH 63A (MOD.SINGLE-PHASE HEATING.ELE)	INTERRUPTOR SECCIONADOR 63A (MOD. CALEFAC.ELEC.MONOFASICA)	INTERRUPTEUR SECTIONNEUR 63A (MOD.CHAUFFAGE ELEC.MONOPHASE)
25	422535	VARIATOR BOX SIDE PANEL	LATERAL CAJA VARIADOR	LATERAL BOITE VARIATEUR
26	431056	VARIATOR BOX SIDE PANEL	LATERAL CAJA VARIADOR	LATERAL BOITE VARIATEUR
27	332601	SHEATH-LODGING DGB-7	PASAMUROS DGB-7	LOGEMENT DGB-7
28	439000	COVER ABSORBER PROFILE	PERFIL AMORTIGUADOR TAPA	PROFILE AMORTISSEUR COUVERCLE
29	431197	POWER INLET BOX PROFILE	PERFIL CAJA ENTRADA CORRIENTE	PROFILE BOITE ENTREE COURANT
30	321273	PROFILE E0813T00000 UL94HB	PERFIL E0813R00000 UL94HB	PROFILE E0813T00000 UL94HB
31	431106	CONTACTOR FIXING PROFILE	PERFIL FIJACION CONTACTORES	PROFILE FIXATION CONTACTEURS
32	332395	AUXILIARY BOARD HS-60**	PLACA AUXILIAR HS-60**	PLAQUE AUXILIAIRE HS-60**
33	332544	INTELI BOARD E/S-2/A (FOR MOD. INTELI CONTROL)	PLACA INTELI E/S-2/A (PARA MOD. INTELI CONTROL)	PLAQUE INTELI E/S-2/4 (POUR MOD. INTELI CONTROL)
34	160119	FUSE HOLDER REF.FEC 031 1631	PORTAFUSIBLES REF.FEC.031.1631	PORTE-FUSIBLE REF.FEC 031 1631
35	322701	RELAY 12VDC	RELE 12VDC*	RELAIS 12VDC
36	332726	HEX SEPARATOR HTSB-M4-20-7-1 (HS-6013) (6 UNITS) (EH030) (1 UNIT)	SEPARADOR HEX.HTSB-M4-20-7-1 (HS-6013) (6 UNIDADES) . (EH030) (1 UNIDAD)	SEPARATEUR HEX HTSB-M4-20-7-1 (HS-6013) (6 UNITES) (EH030) (1 UNITE)
37	341933	HEX SEPARATOR HTSN-M4-20-8-1 (EH030) (5 UNITS)	SEPARADOR HEX.HTSN-M4-20-8-1 (EH030) (5 UNIDADES)	SEPARATEUR HEX HTSN-M4-20-8-1 (EH030) (5 UNITES)
38	332809	CIRCUIT BRACKET LCBS-4-7-01	SOPORTE CIRCUITO LCBS-4-7-01	SUPPORT CIRCUIT LCBS-4-7-01
39	431684	POWER INLET COVER	TAPA ENTRADA CORRIENTE	COUVERCLE ENTREE COURANT
40	431114	SELECTOR COVER	TAPA SELECTOR	COUVERCLE SELECTEUR
41	431148	VARIATOR COVER	TAPA VARIADOR	COUVERCLE VARIATEUR
42	430991	VARIATOR PLUG COVER	TAPETA CONECTOR VARIADOR	COUVERCLE CONNECTEUR VARIATEUR
43	328229	SCREW ALO.T25 AR.18ESTR.M 4X10	TORNILLO ALOM.T25 M 4X10 (ESPECIAL)*	VIS ALOM.T25 AR.18ESTR.M 4X10
44	183400	PLATE SCREW ST-4, 20 P.F. C/AL.T25	TORNILLO CHAPA ST-4 (ESPECIAL)*	VIS PLAQUE ST-4, 20 P.F. C/AL.T25
45	146076	BICR ROUND SCREW DIN84 M 4X 8	TOR.CIL.DIN84-4.8 B.TRI.M 4X 8	VIS ROND BICR DIN84-4.8 M 4X 8
46	146225	BI.HEX SCREW DIN933-8.8 M-5X25	TOR.EX.DIN933-8.8 B.TRI.M 5X25	VIS HEX BICR.DIN933-8.8 M-5X25

info@zipnasklade.ru
8(800)500-69-51

Nº	REF	DENOMINATION	DENOMINACIÓN	DENOMINATION
47	320614	TRANSFORMER IP00 100 VA CSA (HS-6013)	TRANSFORMADOR IP00 100 VA CSA* (HS-6013)	TRANSFORMATEUR IP00 100 VA CSA (HS-6013)
48	322784	PRESSURE TRANSMITTER 400.95100	TRANSM.PRESION HUBA 400.95100	PRESSOSTAT HUBA 400.95100
49	150177	BICR HEX NUT DIN934-8 M5	TUER.EX.DIN934-8 B.TRI.M 5	ECROU HEX DIN934-8 BIC.M5
50	420976	CONVERTER FAN	VENTILADOR CONVERTIDOR	VENTILATEUR CONVERTISSEUR

info@zipnasklade.ru
8(800)500-69-51

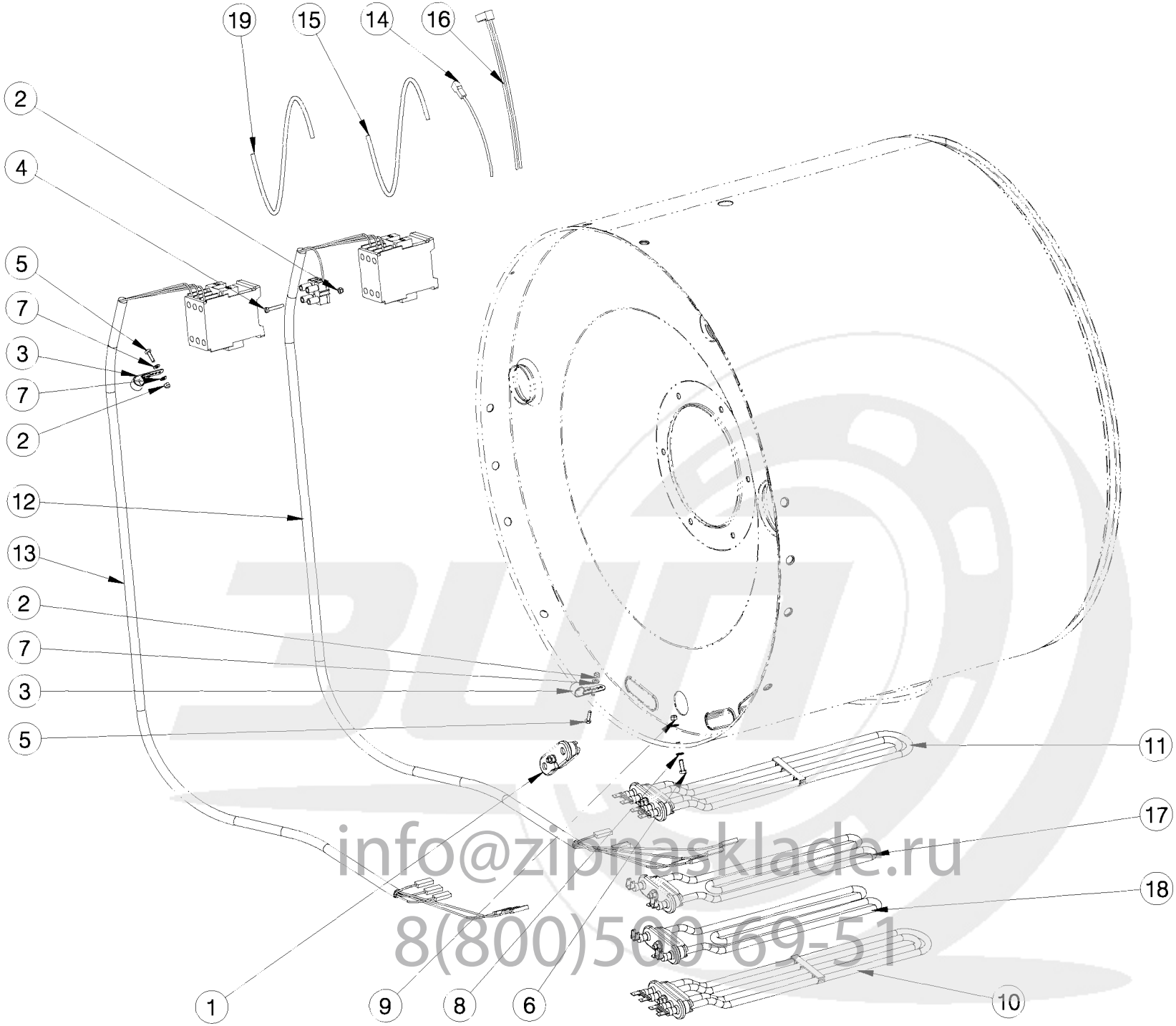

info@zipnasklade.ru
8(800)500-69-51

Nº	REF	DENOMINATION	DENOMINACIÓN	DENOMINATION
		ELECTRIC HEATING KITS	KITS CALEFACCION ELECTRICA .	KITS CHAUFFAGE ELECTRIQUE
	796888	ELEC.HEATING KIT 1PH 20-230V (HS-6013)	KIT CAL.E.1PH 200-230V (HS-6013)	KIT CHAUFF.ELEC.1PH 200-230V (HS-6013)
	796896	EL.HEAT.KIT 1PH(208-240)/240V (EH030) (FOR 208-240V) (HS-6013) (FOR 240V)	KIT CAL.E.1PH(208-240)/240V (EH030) (PARA 208-240V) (HS-6013) (PARA 240V)	KIT CHAUFF.EL.1PH(208-240)240V (EH030) (POUR 208-240V) (HS-6013) (POUR 240V)
	796904	EL.HT.KIT 3PH 200-230/380-400V (HS-6013)	KIT CAL.E.3PH 200-230/380-400V (HS-6013)	KIT CH.EL.3PH 200-230/380-400V (HS-6013)
	796912	EL.H.KIT 3PH(208-240)/240/415 (EH030) (FOR 208-240V) (HS-6013) (FOR 240 AND 415V)	KIT CAL.E.3PH(208-240)/240/415 (EH030) (PARA 208-240V) (HS-6013) (PARA 240 Y 415V)	KIT CH.EL.3PH(208-240)/240/415 (EH030) (POUR 208-240V) (HS-6013) (POUR 240 ET 415V)
1	121962	HEATER INLET LID	CIERRE ENTRADA CALEFACTOR *	FERMETURE ENTREE RESISTANCE
2	132043	SELF-LOCKING NUT DIN985-8 B.TRI.M 4	TUER.AUTOBL.DIN985-8 B.TRI.M 4	ECROU AUTOBLOCANT DIN985-8 B.TRI.M 4
3	140418	CLAMP UNEX REF 1201	BRIDA UNEX 1201	BRIDE UNEX REF 1201
4	146183	BICR CYL SCREW DIN 84 M-4X25	TOR.CIL.DIN84-4.8 B.TRI.M 4X25	VIS CYL BICR DIN 84 M-4X25
5	146266	BICR.HEX SCREW DIN933-8 M-4X15	TOR.EX.DIN933-4.8 B.TRI.M 4X15	VIS HEX BICR.DIN933-8.8 M-4X15
6	146282	BICR.HEX SCREW DIN933-8 M 5X15	TOR.EX.DIN933-8.8 B.TRI.M 5X15	VIS HEX BICR.DIN933-8.8 M 5X15
7	149476	BICR.WASHER B DIN125-ST 4,3	ARAN.B DIN125-ST B.TRI. 4,3	RONDELLE B DIN125-ST BICR.4,3
8	149534	BICR.WASHER B DIN125-ST 5,3	ARAN.B DIN125-ST BICR. 5,3	RONDELLE B BICR.DIN125-ST 5,3
9	176826	SELF-LOCKING NUT DIN985-8 B.TRI.M5	TUER.AUTOBL.DIN985-8 B.TRI.M5	ECROU AUTOBLOCANT DIN 985-8 B.TRI.M5
10	340851	HEATER 230V 4000W	CALEFACTOR 230V 4000W	RESISTANCE 230V 4000W
11	340869	HEATER 240V 4000W	CALEFACTOR 240V 4000W	RESISTANCE 240V 4000W
12	341826	HEATING CONTACTOR WIRES (MOD.THREE-PHASE ELEC.HEATING)	CABLES CONTACTOR CALEFACCION (MOD.CALEFAC. ELEC. TRIFASICA)	CABLES CONTACTEUR CHAUFFAGE (MOD.CHAUFAGE ELEC. TRIPHASE)
13	341834	HEATING CONTACTOR WIRES (MOD.SINGLE-PHASE HEATING.ELE)	CABLES CONTACTOR CALEFACCION (MOD. CALEFAC.ELEC.MONOFASICA)	CABLES CONTACTEUR CHAUFFAGE (MOD.CHAUFFAGE ELEC.MONOPHASE)
14	341891	HEATING AUX.ELEC.INST. (FOR MOD. INTELI CONTROL)	INST. ELEC. AUX. CALEFACCION (PARA MOD. INTELI CONTROL)	INST.ELEC.AUX.CHAUFFAGE (POUR MOD. INTELI CONTROL)
15	341941	CONTACTOR SUPPLY WIRES (MOD.SINGLE-PHASE HEATING.ELE)	CABLES ALIMENTACION CONTACTOR (MOD. CALEFAC.ELEC.MONOFASICA)	CABLES ALIMENTATION CONTACTEUR (MOD.CHAUFFAGE ELEC.MONOPHASE)

info@zippasklade.ru
8(800)500-69-51

Nº	REF	DENOMINATION	DENOMINACIÓN	DENOMINATION
16	341966	HEATING RELAY ELEC.INST. (FOR MOD. LOGI/COIN CONTROL)	INST. ELEC. RELE CALEFACCION (PARA MOD. LOGI/COIN CONTROL)	INST.ELEC.RELAIS CHAUFFAGE (POUR MOD. LOGI/COIN CONTROL)
17	342642	HEATER 230V 3000W	CALEFACTOR 230V 3000W	RESISTANCE 230V 3000W
18	342659	HEATER 240V 3000W	CALEFACTOR 240V 3000W	RESISTANCE 240V 3000W
19	432708	CONTACTOR SUPPLY WIRES (MOD.THREE-PHASE ELEC.HEATING)	CABLES ALIMENTACION CONTACTOR (MOD.CALEFAC. ELEC. TRIFASICA)	CABLES ALIMENTATION CONTACTEUR (MOD.CHAUFAGE ELEC. TRIPHASE)

info@zipnasklade.ru
8(800)500-69-51

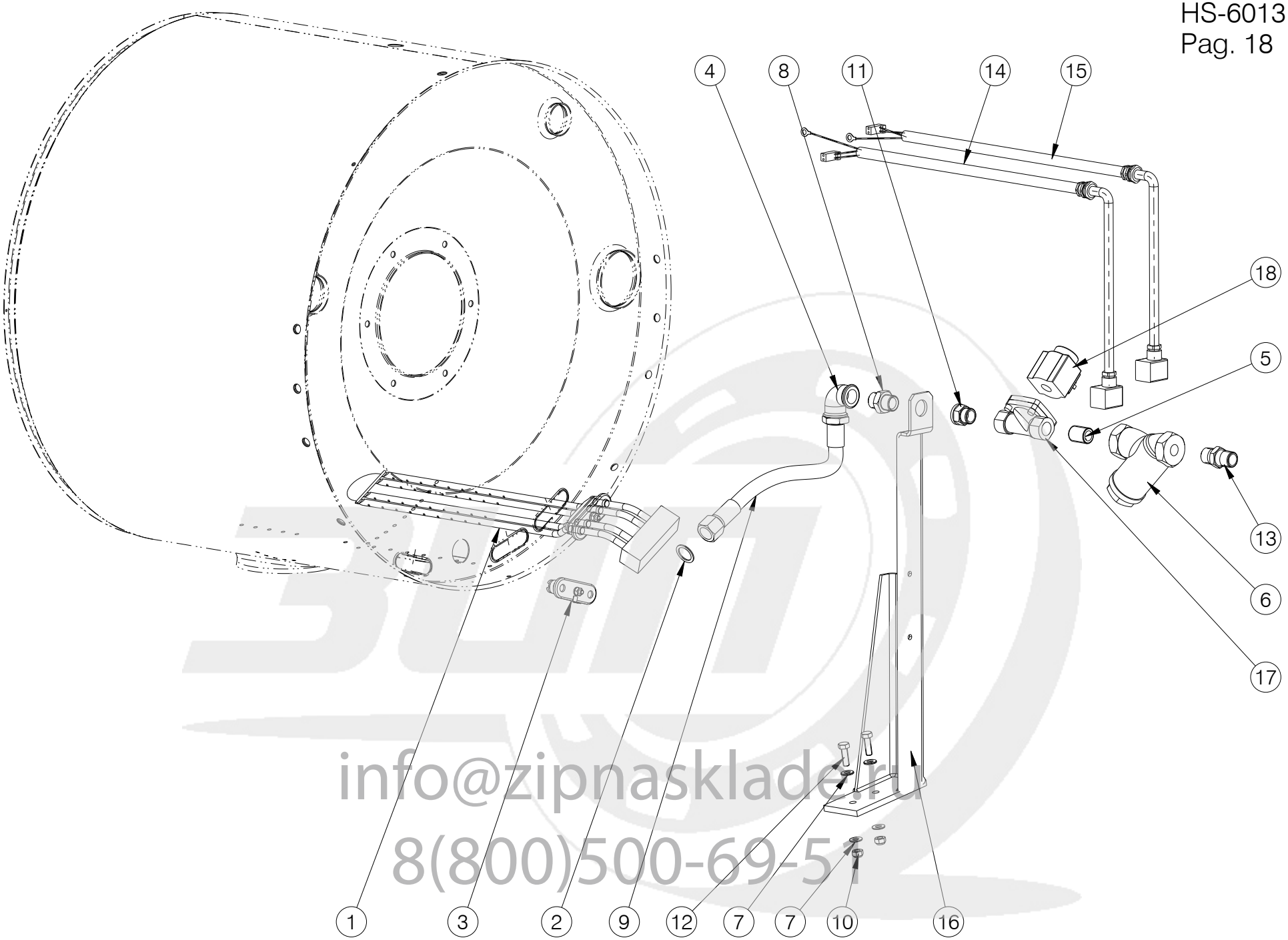

info@zipnasklade.ru
8(800)500-69-51

Nº	REF	DENOMINATION	DENOMINACIÓN	DENOMINATION
		STEAM HEATING KITS	KITS CALEFACCION VAPOR .	KITS CHAUFFAGE VAPEUR
	796771	STEAM KIT H13-17 IC 50HZ	KIT CAL.VAPOR H13-17 IC 50 HZ	KIT CHAUF.VAP.H13-17 IC 50HZ
	796763	STEAM KIT H13-17 IC 60HZ	KIT CAL.VAPOR H13-17 IC 60 HZ	KIT CHAUF.VAP.H13-17 IC 60HZ
	796797	STEAM KIT H13-17 CC-LC 50HZ	KIT CAL.VAPOR H13-17 CC-LC50HZ	KIT CHAUF.VAP.H13-17 CC-LC 50H
	796789	STEAM KIT H13-17 CC-LC 60HZ	KIT CAL.VAPOR H13-17 CC-LC60HZ .	KIT CHAUF.VAP.H13-17 CC-LC 60H
1	108431	STEAM DISTRIBUTOR	DISTRIBUIDOR VAPOR	DISTRIBUTEUR VAPEUR
2	109777	COPPER GASKET 1/2"	12504 JUNTA COBRE 1/2"	JOINT CUIVRE 1/2"
3	121962	HEATER INLET LID	CIERRE ENTRADA CALEFACTOR *	FERMETURE ENTREE RESISTANCE
4	129445	FIG. 90 1/2" GALV.	FIGURA 90 DE 1/2" GALV.	FIG. 90 1/2" GALV.
5	129999	FIG. 531 1/2" GALV	FIGURA 531 DE 1/2" GALV.	FIG. 531 1/2" GALV
6	133728	STRAINER THREADED 1/2" O'3 PN16	FILTRO GG25 ROSC.1/2" PN16 0'3MM INOX	FILTRE FILETE 1/2" 0,3 PN16
7	149518	BICR.WASHER B DIN125-ST 8,4	ARAN.B DIN125-ST B.TRI. 8,4	RONDELLE.B DIN125-ST BICR.8,4
8	156216	JOINTING SCREW 10903 1/2"	10903 TORNILLO UNION MM1/2"	VIS UNION 10903 1/2"
9	162305	STEAM INLET JOINTING	UNION ENTRADA VAPOR	UNION ENTREE VAPEUR
10	164285	SELF-LOCKING NUT DIN985-8 B.TRI.M8	TUER.AUTOBL.DIN985-8 B.TRI.M8	ECROU AUTOBLOCANT DIN985-8 B.TRI.M8
11	183525	MALE-FEMALE SLEEVE 1/2"	MANGUITO MACHO-HEMBRA1/2"LATON	FRETTE MALE-FEMELLE 1/2"
12	192849	BIC.HEX SCREW DIN933-8 M-8X25	TOR.EX.DIN933-8.8 B.TRI.M 8X25	VIS HEX.DIN933-8,8 BICR.M-8X25
13	251355	STEAM INLET SLEEVE	MANGUITO ENTRADA VAPOR	MANCHON ENTREE VAPEUR
14	341909	STEAM ELEC.INST. (FOR MOD.INTELI CTRL STEAM)	INST. ELEC. VAPOR (PARA MOD.INTELI CTRL A VAPOR)	INST.ELEC.VAPEUR (POUR MOD.INTELI CTRL A VAPEUR
15	341917	STEAM ELEC.INST. (MOD.LOGI/COIN CTRL STEAM)	INST. ELEC. VAPOR (MOD.LOGI/COIN CTRL A VAPOR)	INST.ELEC.VAPEUR (MOD.LOGI/COIN CTRL A VAPEUR)
16	423137	STEAM INLET BRACKET	SOPORTE ENTRADA VAPOR	SUPPORT ENTREE VAPEUR
17	583369	STEAM VALVE BODY 1/2"	CUERPO VALV. VAPOR 1/2" *	CORPS VANNE VAPEUR 1/2"
18	583385	STEAM VALVE COIL 208-240V 50/60Hz	BOBINA V.VAPOR 208-240V 50/60Hz *	BOBINE V. VAPEUR 208-240V 50/60Hz

info@zipnasklade.ru
8(800)500-69-51

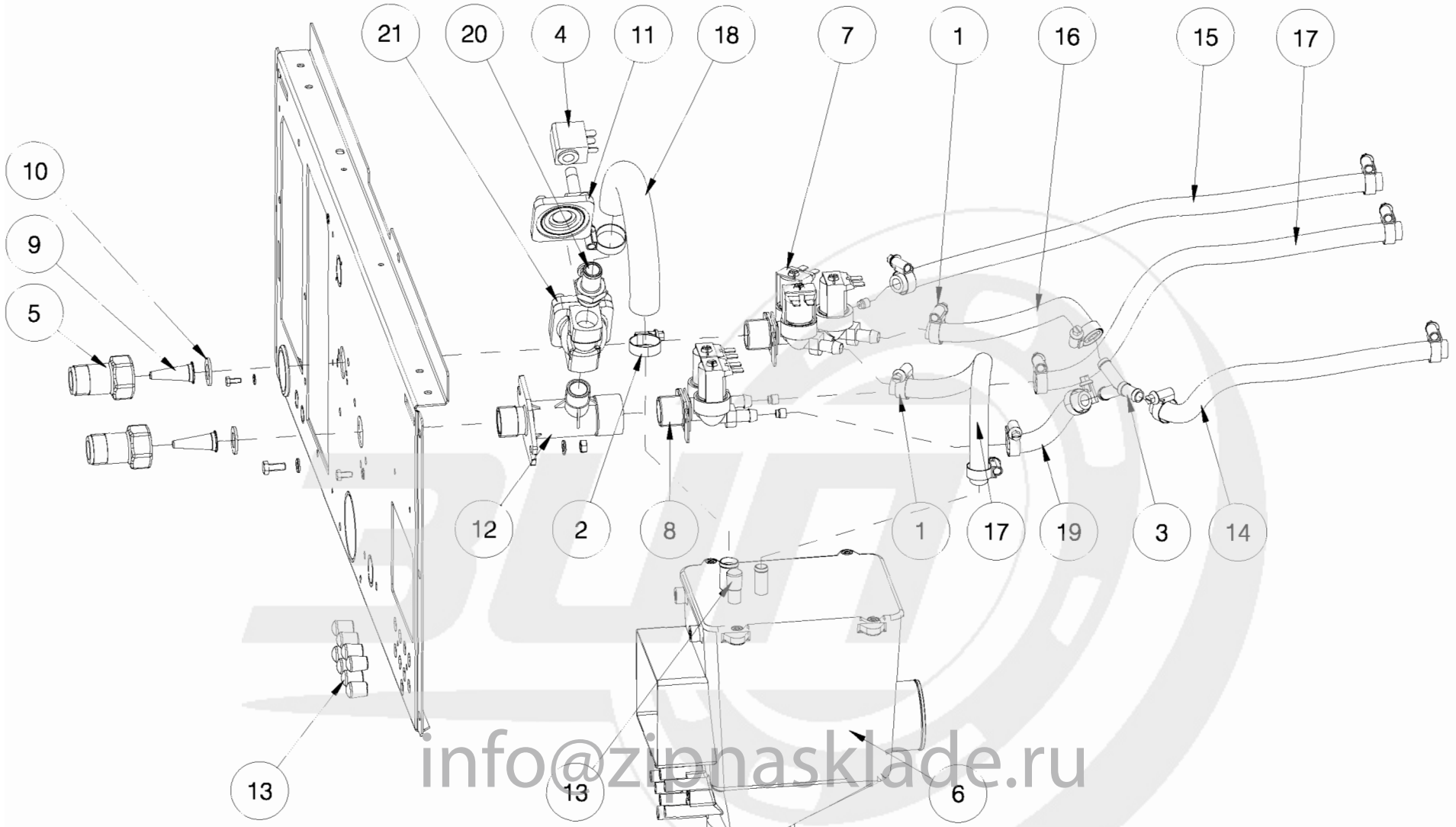

info@zipnasklade.ru
8(800)500-69-51

Nº	REF	DENOMINATION	DENOMINACIÓN	DENOMINATION
1	155150	HOSE CLIP ASFA-L W2 8-16	ABRAZADERA ASFA-L W2 8-16	COLLIER ASFA-L W2 8-16
2	156109	CLAMP 16-27	ABRAZADERA 16- 27 *	BRIDE 16-27
3	152165	BRANCH	BIFURCACION	BIFURCATION
4	333716	COIL AB 5W 12V CC 042N0806	BOBINA AB 5W 12V CC 042N0806	BOBINE AB 5W 12V CC 042N0806
5	315317	FILTER BODY	CUERPO FILTRO	CORPS FILTRE
6	339689	DISTRIBUTOR	DISTRIBUIDOR	DISTRIBUTEUR
7	511022	THREE TRACK ELECTROVALVE	ELECTROVALVULA TRES VIAS	ELECTROVANNE TROIS VOIES
	510933	REGULATOR 4 L/MIN.RED	REGULADOR DE 4L/MIN.ROJO CLARO	REGULATEUR 4 L/MIN ROUGE
	300194	YELLOW CASE 30053	ESTUCHE AMARILLO 30053	BOITE JAUNE 30053
	300202	INTEGRAL GUIDE-MEMBRANE 30696	MEMBRANA-GUIA INTEGRAL 30696 *	MEMBRANE-GUIDE INTEGRALE 30696
	332296	COIL 255043000000 12VCC	BOBINA 255043000000 12VCC	BOBINE 255043000000 12VCC
8	521294	DOUBLE ELECTROVALVE	ELECTROVALVULA DOS VIAS	ELECTROVANNE DOUBLE
	156257	REGULATOR 8 L/MIN (RED)	REGULADOR DE 8 L/MIN. (ROJO)	REGULATEUR 8 L/MIN (ROUGE)
	156265	REGULATOR 3 L/MIN (BLACK)	REGULADOR DE 3 L/MIN. (NEGRO)	REGULATEUR 3 L/MIN (NOIR)
	300194	YELLOW CASE 30053	ESTUCHE AMARILLO 30053	BOITE JAUNE 30053
	300202	INTEGRAL GUIDE-MEMBRANE 30696	MEMBRANA-GUIA INTEGRAL 30696 *	MEMBRANE-GUIDE INTEGRALE 30696
	332296	COIL 255043000000 12VCC	BOBINA 255043000000 12VCC	BOBINE 255043000000 12VCC
9	315614	CONICAL FILTER REF.4008-2-1	FILTRO CONICO REF.4008-2-1	FILTRE CONIQUE REF.4008-2-1
10	114348	GASKET D24XD13,5X2	JUNTA MIFLEX D24X13, 5X2 EPDM WRC 400105	JOINT D24XD13,5X2
11	341685	SPARE-PARTS KIT EV220A 12-14B	KIT REPUES.EV220A 12-14B *	KIT RECHANGES EV220A 12-14B
12	333682	ELECTROVALVE BRACKET	SOPORTE ELECTROVALVULAS	SUPPORT ELECTROVANNES
13	156679	CONICAL END-PIECE R-16 D10	TOPE CONICO REPRIMSA R-16 D10	BOUCHON CONIQUE R-16 D10
14	411371	WATER INLET HOSE	TUBO ENTRADA AGUA	TUBE ENTREE EAU
15	411397	WATER INLET HOSE	TUBO ENTRADA AGUA	TUBE ENTREE EAU
16	427187	WATER INLET HOSE	TUBO ENTRADA AGUA	TUBE ENTREE EAU
17	427195	WATER INLET HOSE	TUBO ENTRADA AGUA	TUBE ENTREE EAU
18	429845	WATER INLET HOSE	TUBO ENTRADA AGUA	TUBE ENTREE EAU
19	433680	WATER INLET HOSE	TUBO ENTRADA AGUA	TUBE ENTREE EAU

info@zipnasklade.ru
8(800)500-69-51

Nº	REF	DENOMINATION	DENOMINACIÓN	DENOMINATION
20	333690	FIG. 243 MI 1/2" BRASS	FIGURA 243 MI DE 1/2" LATON	FIG. 243 MI 1/2" LAITON
21	333708	VALVE EV220A G12 042U4022	CUERPO VAL.EV220A G12 042U4022	VANNE EV220A G12 042U4022

info@zipnasklade.ru
8(800)500-69-51

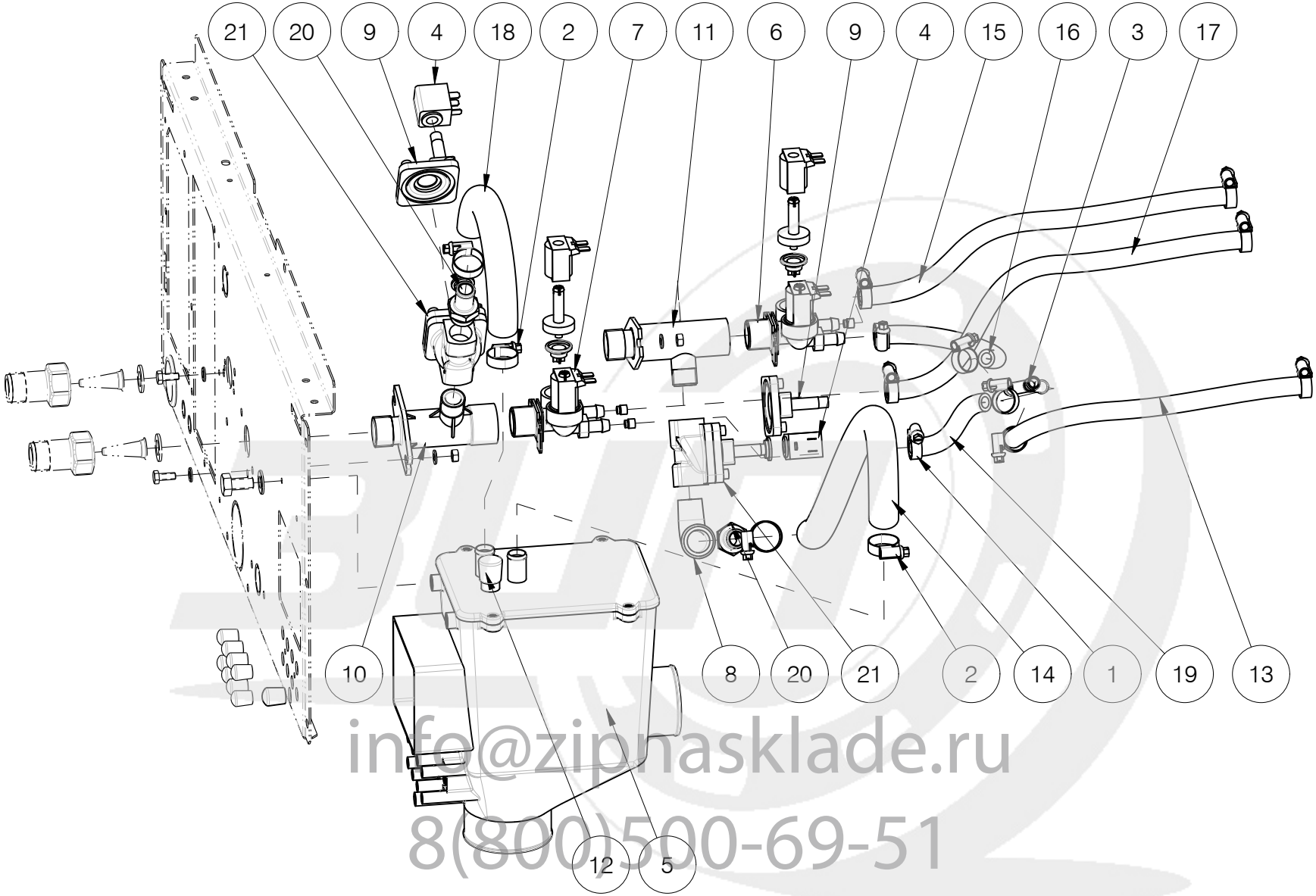

info@zipnasklade.ru
8(800)500-69-51

Nº	REF	DENOMINATION	DENOMINACIÓN	DENOMINATION
1	155150	HOSE CLIP ASFA-L W2 8-16	ABRAZADERA ASFA-L W2 8-16	COLLIER ASFA-L W2 8-16
2	156109	CLAMP 16-27	ABRAZADERA 16- 27 *	BRIDE 16-27
3	152165	BRANCH	BIFURCACION	BIFURCATION
4	333716	COIL AB 5W 12V CC 042N0806	BOBINA AB 5W 12V CC 042N0806	BOBINE AB 5W 12V CC 042N0806
5	333658	DISTRIBUTOR	DISTRIBUIDOR	DISTRIBUTEUR
6	511089	DOUBLE ELECTROVALVE	ELECTROVALVULA DOS VIAS	ELECTROVANNE DOUBLE
	510933	REGULATOR 4 L/MIN.RED	REGULADOR DE 4L/MIN.ROJO CLARO	REGULATEUR 4 L/MIN ROUGE
	300194	YELLOW CASE 30053	ESTUCHE AMARILLO 30053	BOITE JAUNE 30053
	300202	INTEGRAL GUIDE-MEMBRANE 30696	MEMBRANA-GUIA INTEGRAL 30696 *	MEMBRANE-GUIDE INTEGRALE 30696
	332296	COIL 255043000000 12VCC	BOBINA 255043000000 12VCC	BOBINE 255043000000 12VCC
7	521294	DOUBLE ELECTROVALVE	ELECTROVALVULA DOS VIAS	ELECTROVANNE DOUBLE
	156257	REGULATOR 8 L/MIN (RED)	REGULADOR DE 8 L/MIN. (ROJO)	REGULATEUR 8 L/MIN (ROUGE)
	156265	REGULATOR 3 L/MIN (BLACK)	REGULADOR DE 3 L/MIN. (NEGRO)	REGULATEUR 3 L/MIN (NOIR)
	300194	YELLOW CASE 30053	ESTUCHE AMARILLO 30053	BOITE JAUNE 30053
	300202	INTEGRAL GUIDE-MEMBRANE 30696	MEMBRANA-GUIA INTEGRAL 30696 *	MEMBRANE-GUIDE INTEGRALE 30696
	332296	COIL 255043000000 12VCC	BOBINA 255043000000 12VCC	BOBINE 255043000000 12VCC
8	129494	ELBOW FIG 92 1/2" GALV	FIGURA 92 DE 1/2"AMAT GALV.	COUDE FIG 92 1/2" GALV
9	341685	SPARE-PARTS KIT EV220A 12-14B	KIT REPUES.EV220A 12-14B *	KIT RECHANGES EV220A 12-14B
10	333682	ELECTROVALVE BRACKET	SOPORTE ELECTROVALVULAS	SUPPORT ELECTROVANNES
11	552133	ELECTROVALVE BRACKET	SOPORTE ELECTROVALVULAS	SUPPORT ELECTROVANNES
12	156687	CONICAL END-PIECE R-16 D16	TOPE CONICO REPRIMSA R-16 D16	ARRET CONIQUE R-16 D16
13	410613	WATER INLET HOSE	TUBO ENTRADA AGUA	TUBE ENTRÉE EAU
14	411199	WATER INLET HOSE	TUBO ENTRADA AGUA	TUBE ENTRÉE EAU
15	411389	WATER INLET HOSE	TUBO ENTRADA AGUA	TUBE ENTREE EAU
16	427187	WATER INLET HOSE	TUBO ENTRADA AGUA	TUBE ENTREE EAU
17	427195	WATER INLET HOSE	TUBO ENTRADA AGUA	TUBE ENTREE EAU
18	429845	WATER INLET HOSE	TUBO ENTRADA AGUA	TUBE ENTREE EAU
19	433680	WATER INLET HOSE	TUBO ENTRADA AGUA	TUBE ENTREE EAU

info@zipnasklade.ru
8(800)500-69-51

Nº	REF	DENOMINATION	DENOMINACIÓN	DENOMINATION
20	333690	FIG. 243 MI 1/2" BRASS	FIGURA 243 MI DE 1/2" LATON	FIG. 243 MI 1/2" LAITON
21	333708	VALVE EV220A G12 042U4022	CUERPO VAL.EV220A G12 042U4022	VANNE EV220A G12 042U4022

info@zipnasklade.ru
8(800)500-69-51