| Mod. | From serial no.<br>A partir máq. nº |
|---|---|
| **HS-6008** | 2.093.867 |
| **EH020** | 1.442.694 |

# Parts Handbook for Washers
# Manual de Recambios para lavadoras
# Notice Vues Eclatées pour laveuses

# HS-6008
# EH020

info@zipnasklade.ru
8(800)500-69-51

**GIRBAU, S.A.**
Crta de Manlleu, km. 1
08500 VIC (Barcelona) • SPAIN
Tel. 34 93 8861100
Fax 34 93 8860785
girbau@girbau.es
www.girbau.com

*USA, CANADA:*

**CONTINENTAL GIRBAU Inc.**
2500 State Road 44
WI 54904 Oshkosh • USA
Tel. 1(920) 231-8222
Fax 1(920) 231-4666
info@cont-girbau.com
www.cont-girbau.com

**Parts Handbook**
**Manual de recambios**
**Vues Eclatées**

**HS-6008**
**EH020**

Cod. 427161 Alt.06
Rev. 02/0817

## NOTES TO USE PARTS LIST

Sheets no. 1, 2, 3, 4, 5:
Are common for all versions.

Sheet no. 6:
Front soap dispenser

Sheet no. 7:
Top soap dispenser

## ACLARACIONES PARA EL USO DEL MANUAL DE RECAMBIOS

Hojas nº 1, 2, 3, 4, 5:
Son comunes a todas las variantes.

Hoja nº 6:
Dosificador frontal

Hoja nº 7:
Dosificador superior

## NOTES UTILISATION VUES ECLATEES

Feuilles no.1, 2, 3, 4, 5:
Sont communes à toutes les versions.

Feuille no. 6:
Bac a produits frontal

Feuille no. 7:
Bac a produits supérieure

info@zipnasklade.ru
8(800)500-69-51

**VERY IMPORTANT:**
Before ordering parts be sure they have not been modified. Check it on modification sheet, after the corresponding sheet.

**MUY IMPORTANTE:**
Al pedir una pieza cerciorarse antes de que la misma no ha sido modificada. Si lo hubiese sido, estaría situada como hoja de modificaciones, detrás de la hoja correspondiente.

**TRES IMPORTANT:**
Avant de commander une pièce, s'assurer qu'elle n'a pas été modifiée. Le vérifier sur feuille de modifications, derrière la feuille correspondante.

HS-6008/EH020 1

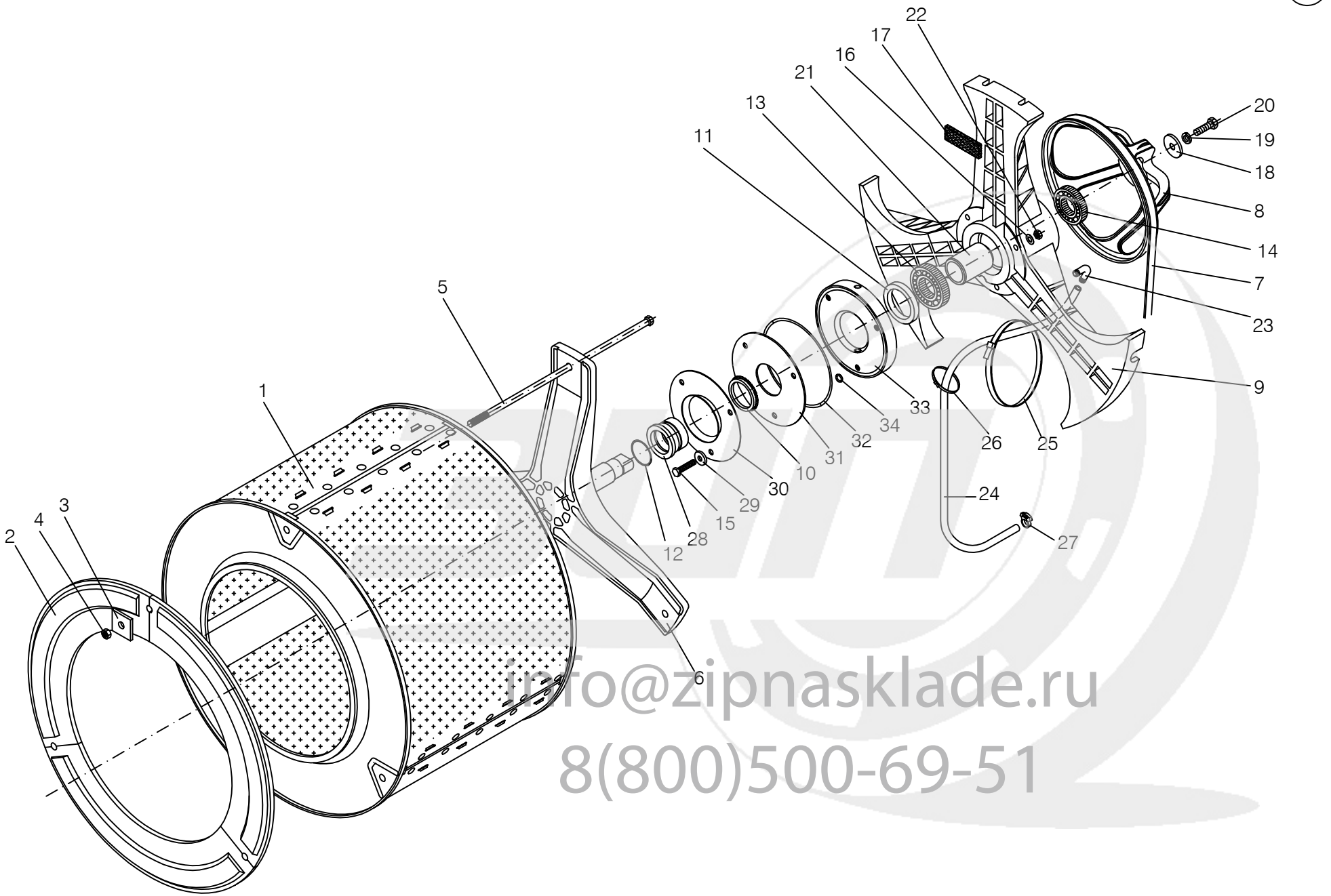


info@zipnasklade.ru
8(800)500-69-51

U.16433

| Nº | REF | | DENOMINATION | DENOMINACIÓN | DENOMINATION |
|---|---|---|---|---|---|
| 1 | 421461 | # | BASKET BODY | CUERPO TAMBOR | CORPS TAMBOUR |
| 2 | 321919 | # | FRONT PLATE | VOLANTE DE INERCIA | PLAQUE FRONTALE |
| 3 | 321927 | | BASKET BODY STRETCHER WASHER | ARANDELA TIRANTE TAMBOR | RONDELLE TIRANT TAMBOUR |
| 4 | 149955 | | HEX NUT DIN 934 A2-70 M10 | TUERCA HEXAGONAL DIN 934 A2-70 M10 | ECROU HEXAGONALE DIN 934 A2-70 M10 |
| 5 | 421479 | # | BASKET SHOVEL STRETCHER | TIRANTE PALA TAMBOR | TIRANT PALETTE TAMBOUR |
| 6 | 332841 | # | BASKET TRUNNION | ESTRELLA ARRASTRE TAMBOR | CROISILLON TAMBOUR |
| 7 | 319848 | | BELT 6PJ 1428+/-6 7700 | CORREA ESTR.6PJ1428+-6 | COURROIE 6PJ 1428+/6 7700 |
| 8 | 321638 | | BASKET PULLEY | POLEA TAMBOR | POULIE TAMBOUR |
| 9 | 421248 | | BEARING BOX | ESTRELLA CAJA COJINETES | BOITE ROULEMENTS |
| 10 | 338921 | | RING V-RING V- 50 A NBR562 | ANILLO V-RING V- 50 A (343715) | BAGUE V-RING V- 50 A NBR562 |
| 11 | 338913 | | SEAL 52X68X8 BA | RETEN 52X68X8 BA | RESERVE 52X68X8 BA |
| 12 | 338947 | | TORIC GASKET 40X44X2 | JUNTA TORICA 40X44X2 | JOINT TORIQUE 40X44X2 |
| 13 | 305789 | | BEARING 6208-2Z | RODAMIENTO 6208-2Z | ROULEMENT 6208-2Z |
| 14 | 172072 | | BEARING 6206-2Z QE6 | RODAMIENTO 6206-2Z | ROULEMENT 6206-2Z QE6 |
| 15 | 338988 | | HEX SCREW INOX DIN 933 M 8X 55 | TOR.EX.DIN933INOX A2-70 M 8X55 | VIS.HEX.DIN933 INOX A270 M8X55 |
| 16 | 149518 | | BICR.WASHER B DIN125-ST 8,4 | ARAN.B DIN125-ST B.TRI. 8,4 | RONDELLE.B DIN125-ST BICR.8,4 |
| 17 | 101014 | | PROFILE ADHESIVE 25X6 | PERF.AUTOAD.ESPONJ.NEOPR.25 X6 | PROFILE ADHESIVE 25X6 |
| 18 | 406421 | | WASHER D57XD11X4 TRIVALENT | ARANDELA 57X11X4 TRIVALENTE | RONDELLE D57XD11X4 TRIVALENT |
| 19 | 149799 | | GROWER WASHER DIN 127 M-10 | ARAN.GROWER A10 DIN127 B.TRI. | RONDELLE GROWER DIN 127 M-10 |
| 20 | 146506 | | 8G HEX.SCREW DIN 933 M-10X30 | TOR.EX.DIN933-8.8 B.TRI.M10X30 | VIS HEX. 8G DIN 933 M-10X30 |
| 21 | 333138 | | BEARING END-PIECE | TOPE COJINETES | ARRET ROULEMENTS |
| 22 | 164285 | | SELF-LOCKING NUT DIN985-8 B.TRI.M8 | TUER.AUTOBL.DIN985-8 B.TRI.M8 | ECROU AUTOBLOCANT DIN985-8 B.TRI.M8 |
| 23 | 332304 | | ELBOW POLY.STER10 | CODO POLIPROPILENO STER10 | COUDE POLY.STER10 |
| 24 | 420844 | | BEARING BOX DRAIN HOSE | TUBO DESAGÜE CAJA COJINETES | TUBE VIDANGE BOITE ROULEMENTS |
| 25 | 140509 | | BLACK POLYAMIDE CLAMP 7.5X360MM | BRIDA POLIAMIDA NEGRA 7.5X360MM | BRIDE POLYAMIDE NOIR 7.5X360MM |
| 26 | 140525 | | CLAMP 2244-0 | BRIDA UNEX 2244-0 * | BRIDE 2244-0 |
| 27 | 323667 | | CLAMP NORMA D12,07-D13,61 | ABRAZADERA NORMA D12,07-D13,61 | COLLIER NORMA D12,07-D13,61 |
| 28 | 338822 | | SEAL RING | ANILLO RETENES | BAGUE RESERVES |

info@zipnasklade.ru
8(800)500-69-51

| Nº | REF | | DENOMINATION | DENOMINACIÓN | DENOMINATION |
|---|---|---|---|---|---|
| 29 | 333146 | | WASHER 23X8.5X3 | ARANDELA 23X8.5X3 INOX | RONDELLE 23X8.5X3 |
| 30 | 338848 | | SEAL PLATE | DEFLECTOR ANILLO RETENES | PLATINE RESERVES |
| 31 | 338855 | | V-RING PLATE | PLATINA V-RING | PLATINE V-RING |
| 32 | 333153 | | JOINT | JUNTA ESPONJOSA SEPARADOR | JOINT |
| 33 | 333120 | | OUTER DRUM SEPARATOR | SEPARADOR ENVOLVENTE | SEPARATEUR CUVE |
| 34 | 338939 | | TORIC GASKET 8X11.2X1.6 | JUNTA TORICA 8X11.2X1.6 | JOINT TORIQUE 8X11.2X1.6 |
| | | | WITHOUT ILLUSTRATION | SIN ILUSTRACION | SANS ILLUSTRATION |
| | 421297 | # | BASKET | TAMBOR | TAMBOUR |
| | 629725 | # | RILSAN COATING DRUM STAR DISK | TAMBOR CON ESTRELLA RILSANIZADA | TAMBOUR AVEC ÉTOILE TRAITÉE AVEC RILSAN |

info@zipnasklade.ru
8(800)500-69-51

# HS-6008/EH020 (2)

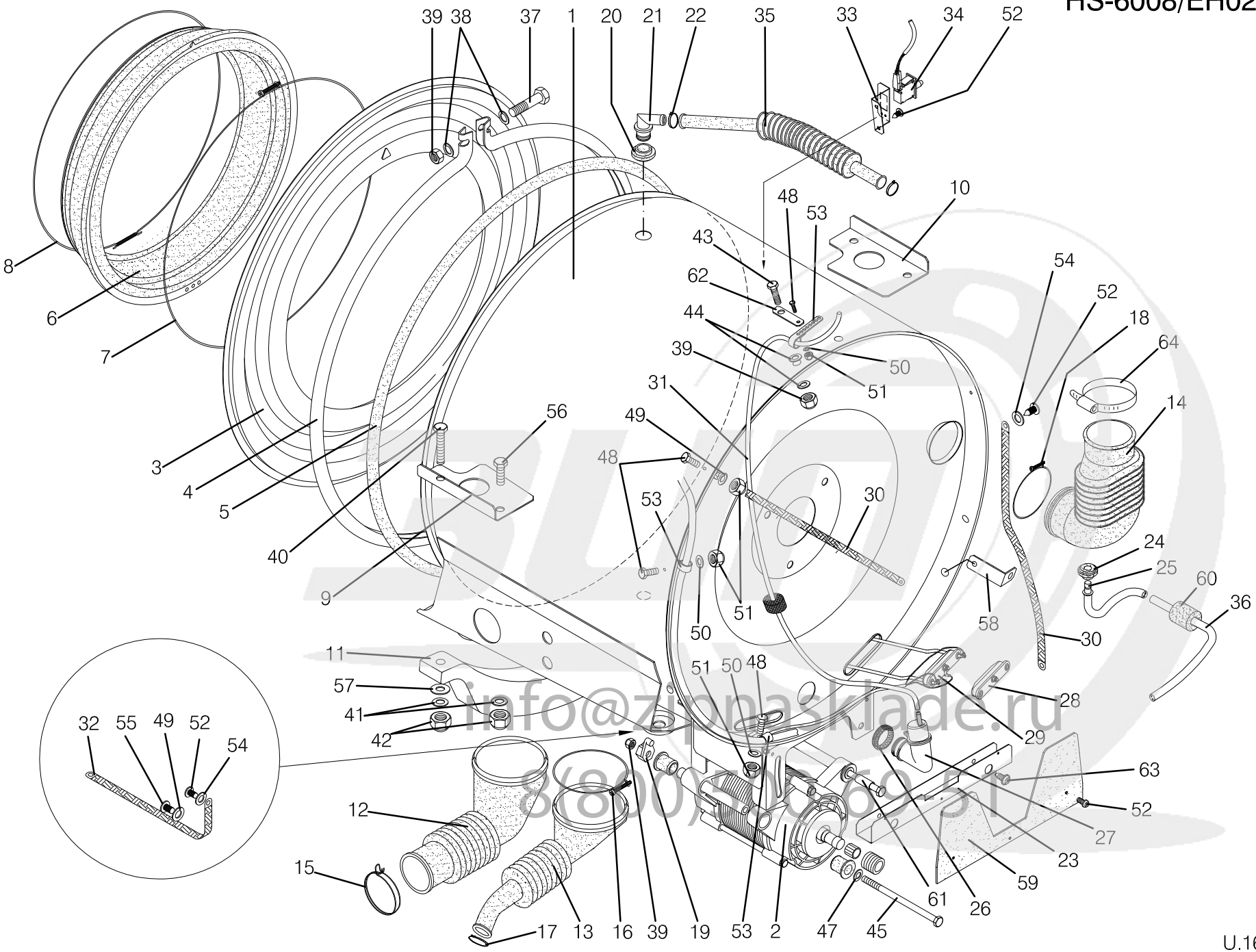


info@zippaskladе.ru
8(800)700 69 51

U.16434

| Nº | REF | DENOMINATION | DENOMINACIÓN | DENOMINATION |
|---|---|---|---|---|
| | | ELECTRIC HEATING KITS | KITS CALEFACCION ELECTRICA | KITS CHAUFFAGE ELECTRIQUE |
| | 796987 | E.HEATING KIT 200-230/380-400V<br>(HS-6008) | KIT CAL.E.200-230/380-400V<br>(HS-6008) | KIT CHAUFF.E.200-230/380-400V<br>(HS-6008) |
| | 796995 | E.HEAT.KIT (208-240)/240/415V<br>(EH020)<br>(FOR 208-240V)<br>(HS-6008)<br>(FOR 240 AND 415V) | KIT CAL.E.(208-240)/240/415V<br>(EH020)<br>(PARA 208-240V)<br>(HS-6008)<br>(PARA 240 Y 415V) | KIT CHAUFF.E(208-240)/240/415V<br>(EH020)<br>(POUR 208-240V)<br>(HS-6008)<br>(POUR 240 ET 415V) |
| 1 | 421271 | OUTER DRUM | ENVOLVENTE | CUVE |
| 2 | 341396 | MOTOR SET | CONJUNTO MOTOR | ENSEMBLE MOTEUR |
| | 326603 | STAR TOLERANCE RING | ANILLO TOLER.STAR 0820-015-55 | BAGUE TOLERANCE STAR |
| | 323857 | MOTOR PULLEY | POLEA MOTOR | POULIE MOTEUR |
| | 323873 | MOTOR SILENTBLOC | SILENTBLOC MOTOR | SILENTBLOC MOTEUR |
| | 341404 | MOTOR SEPARATOR | SEPARADOR MOTOR | SEPARATION MOTEUR |
| | 454744 | BEARING SKF 6203 ZZ/C3-LHT23 | RODAMIENTO SKF 6203 ZZ/C3-LHT23 | ROULEMENT SKF 6203 ZZ/C3-LHT23 |
| 3 | 322099 | OUTER DRUM FRONT | FRONTAL ENVOLVENTE | FRONTAL CUVE |
| 4 | 322222 | OUTER DRUM FIXING RING | ARO FIJACION ENVOLVENTE | BAGUE FIXATION CUVE |
| 5 | 327700 | OUTER DRUM FRONT GASKET | JUNTA FRONTAL ENVOLVENTE | JOINT FRONTAL CUVE |
| 6 | 352161 | DOOR GASKET - HS-6008 | JUNTA ESCOTILLA - HS-6008 | JOINT HUBLOT - HS-6008 |
| | 563361 | DOOR GASKET HS-6008<br>(LIGHT GRAY) | JUNTA ESCOTILLA HS-6008<br>(GRIS CLARO) | JOINT HUBLOT HS-6008<br>(GRIS CLAIR) |
| 7 | 323204 | CLAMP D385XD1,5 | ABRAZ.ALAMBRE D385XD1,5 TORNI. | BRIDE D385XD1,5 |
| 8 | 323212 | CLAMP D340XD1,5 | ABRAZ.ALAMBRE D340XD1,5 MUELLE | BRIDE D340XD1,5 |
| 9 | 323519 | RIGHT SUPPORT RENFORT | REFUERZO APOYO DERECHO | RENFORT APPUI DROIT |
| 10 | 323485 | LEFT SUPPORT RENFORT | REFUERZO APOYO IZQUIERDO | RENFORT APPUI GAUCHE |
| 11 | 322248 | COUNTERWEIGHT | CONTRAPESO | CONTREPOIDS |
| 12 | 322214 | OUTER-DRUM DRAIN BELLOWS<br>(FOR GRAVITY DRAIN) | FUELLE DESAGUE ENVOLVENTE<br>(PARA DESAGÜE POR GRAVEDAD) | DURITE VIDANGE CUVE<br>(POUR VIDANGE PAR GRAVITE) |
| 13 | 322255 | OUTER-DRUM DRAIN BELLOWS<br>(FOR PUMP DRAIN) | FUELLE DESAGUE ENVOLVENTE<br>(PARA DESAGÜE POR BOMBA) | DURITE VIDANGE CUVE<br>(POUR VIDANGE PAR POMPE) |
| 14 | 338814 | DISPENSER BELLOWS | FUELLE DOSIFICADOR | DURITE BAC A PRODUIT |
| 15 | 323576 | CLAMP FIM 35542 B54,2<br>(FOR GRAVITY DRAIN) | ABRAZ.FIM 35542 B54,2<br>(PARA DESAGÜE POR GRAVEDAD) | COLLIER FIM 35542 B54,2<br>(POUR VIDANGE PAR GRAVITE) |

info@zipnasklade.ru
8(800)500-69-51

| Nº | REF | DENOMINATION | DENOMINACIÓN | DENOMINATION |
|---|---|---|---|---|
| 16 | 323220 | CLAMP D97XD2 | ABRAZ.ALAMBRE D97XD2 | COLLIER D97XD2 |
| 17 | 323568 | CLAMP FIM 32388 B38,8<br>(FOR PUMP DRAIN) | ABRAZ.FIM 32388 B38,8<br>(PARA DESAGÜE POR BOMBA) | COLLIER FIM 32388 B38,8<br>(POUR VIDANGE PAR POMPE) |
| 18 | 338905 | CLAMP 6860 | ABRAZ.ALAMBRE SWHCFS 6860 | BRIDE 6860 |
| 19 | 421511 | MOTOR NUT BRACKET | SOPORTE TUERCA MOTOR | SUPPORT ECROU MOTEUR |
| 20 | 338863 | VAPOR OUTLET SHEATH-LODGING | PASAMUROS DESVAPORIZADOR | LOGEMENT SORTIE CONDENSATS |
| 21 | 338871 | VAPOR OUTLET RACCORD | RACOR DESVAPORIZADOR | RACCORD SORTIE CONDENSATS |
| 22 | 338897 | CLAMP 20,2 | ABRAZ. F.I.M. 20202 B20,2 | BRIDE 20,2 |
| 23 | 432146 | MOTOR PROTECTION | PROTECCION MOTOR | PROTECTION MOTEUR |
| 24 | 256149 | SENSOR SHEATH LODGING | PASAMUROS SENSOR | LOGEMENT SENSEUR |
| 25 | 193862 | NTC RESISTANCE | RESISTENCIA NTC | RESISTANCE NTC |
| 26 | 320036 | PRESSURE T.BODY SHEATH-LODGING | PASAMUROS CUERPO PRESOSTATO | LOGEMENT CORPS PRESSOSTAT |
| 27 | 320382 | PRESSURE TRANSMITT INTAKE BODY | CUERPO TOMA PRESOSTATO | CORPS PRISE PRESSOSTAT |
| 28 | 121962 | HEATER INLET LID | CIERRE ENTRADA CALEFACTOR * | FERMETURE ENTREE RESISTANCE |
| 29 | 332577 | HEATER 230V 2000/1000 W<br>(HS-6008)<br>(FOR MACHINES ELECTR.HEATING)<br>(FOR 200V-208V-220V-230V-380V-400V) | CALEFACTOR 230V 2000/1000 W<br>(HS-6008)<br>(PARA MODELOS CALEFAC.ELECTR.)<br>(PARA 200V-208V-220V-230V-380V-400V) | RESISTANCE 230V 2000/1000 W<br>(HS-6008)<br>(POUR MACHINES CHAUF.ELECTR.)<br>(POUR 200V-208V-220V-230V-380V-400V) |
| | 332569 | HEATER 240V 2000/1000W<br>(EH020)<br>(FOR MACHINES ELECTR.HEATING)<br>(FOR 208-240V)<br>.<br>(HS-6008)<br>(FOR MACHINES ELECTR.HEATING)<br>(FOR 240 AND 415V) | CALEFACTOR 240V 2000/1000W<br>(EH020)<br>(PARA MODELOS CALEFAC.ELECTR.)<br>(PARA 208-240V)<br>.<br>(HS-6008)<br>(PARA MODELOS CALEFAC.ELECTR.)<br>(PARA 240 Y 415V) | RESISTANCE 240V 2000/1000W<br>(EH020)<br>(POUR MACHINES CHAUF.ELECTR.)<br>(POUR 208-240V)<br>.<br>(HS-6008)<br>(POUR MACHINES CHAUF.ELECTR.)<br>(POUR 240 ET 415V) |
| 30 | 323824 | GROUND CS 6-310/010/07 | TRENZA DE MASA CS 6-310/010/07 | TERRE CS 6-310/010/07 |
| 31 | 343327 | PRESSURE TRANSMITTER HOSE | TUBO TRANSMISOR PRESION | TUYAU PRESSOSTAT |
| 32 | 323832 | GROUND CS 6-430/010/07<br>(HS-6008 NO H6020) | TRENZA DE MASA CS 6-430/010/07<br>(HS-6008 NO H6020) | TERRE CS 6-430/010/07<br>(HS-6008 NO H6020) |
| 33 | 338830 | MICRO-SWITCH BRACKET | SOPORTE MICRORRUPTOR | SUPPORT MICRORRUPTEUR |
| 34 | 323048 | MINISWITCH CHERRY E69-60C | MINIRRUPTOR CHERRY E69-60C | MINIRRUPTEUR CHERRY E69-60C |
| 35 | 338889 | VAPOUR OUTLET HOSE | TUBO DESVAPORIZADOR | TUBE SORTIE CONDENSATS |
| 36 | 328211 | THERMOSTAT PROBE ELECTRIC.INST | INST.ELEC.SONDA TEMPERATURA | INSTAL.ELEC.SONDE TEMPERATURE |

info@zipnasklade.ru
8(800)500-69-51

| Nº | REF | DENOMINATION | DENOMINACIÓN | DENOMINATION |
|---|---|---|---|---|
| 37 | 146464 | BICR.HEX SCREW DIN933-8 M8X100 | TOR.EX.DIN933-8.8 B.TRI.M8X100 | VIS HEX BICR.DIN933-8 M 8X100 |
| 38 | 149518 | BICR.WASHER B DIN125-ST 8,4 | ARAN.B DIN125-ST B.TRI. 8,4 | RONDELLE.B DIN125-ST BICR.8,4 |
| 39 | 164285 | SELF-LOCKING NUT DIN985-8 B.TRI.M8 | TUER.AUTOBL.DIN985-8 B.TRI.M8 | ECROU AUTOBLOCANT DIN985-8 B.TRI.M8 |
| 40 | 186528 | HEX SCREW DIN 933 8,8 M10x50 TRIVALENT | TORNILLO HEXAGONAL DIN 933 8,8 M10x50 TR | VIS HEXAGONALE DIN 933 8,8 M10x50 TRIVAL |
| 41 | 149500 | BICR.WASHER B DIN125-ST 10,5 | ARAN.B DIN125-ST B.TRI.10,5 | RONDELLE B DIN125-ST BICR.10,5 |
| 42 | 150649 | SELF-LOCKING NUT DIN985-8 B.TRI.M10 | TUER.AUTOB.DIN985-8 B.TRI.M10 | ECROU AUTOBLOCANT DIN985-8 B.TRI.M10 |
| 43 | 192831 | BICR.HEX SCREW DIN 933-8 M8X30 | TOR.EX.DIN933-8.8 B.TRI.M 8X30 | VIS HEX DIN 933-8,8 BIC.M8X30 |
| 44 | 261529 | WASHER 25X8,5X4 | ARANDELA 25X8.5X4 TRIVALEN. | RONDELLE 25X8,5X4 |
| 45 | 341461 | SCREW HEX 8.8 DIN931 M 8X180 | TOR.EX.DIN931-8.8B.TRI.M 8X180 | VIS.HEX.DIN931 8.8 BICR.M8X180 |
| 46 | 332627 | SCREW REF. TT85 T M3 X16 | TOR. REF. TT85 T M3 X16 | VIS REF.TT85 T M3 X16 |
| 47 | 258822 | WASHER 19X8.5X4 | ARANDELA 19X8.5X4 TRIVALEN. | RONDELLE 19X8.5X4 |
| 48 | 146258 | BIC.HEX SCREW DIN933-4.8 M4X10 | TOR.EX.DIN933-4.8 B.TRI.M 4X10 | VIS HEX DIN933-4.8 BICR.M 4X10 |
| 49 | 287920 | WASHER 14X4,5X2 | ARANDELA 14X4.5X2 TRIVALEN. | RONDELLE 14X4,5X2 |
| 50 | 149476 | BICR.WASHER B DIN125-ST 4,3 | ARAN.B DIN125-ST B.TRI. 4,3 | RONDELLE B DIN125-ST BICR.4,3 |
| 51 | 132043 | SELF-LOCKING NUT DIN985-8 B.TRI.M 4 | TUER.AUTOBL.DIN985-8 B.TRI.M 4 | ECROU AUTOBLOCANT DIN985-8 B.TRI.M 4 |
| 52 | 322750 | SCREW FDS SF-M5X12 PKS TORX SPER | TORNILLO FDS SF-M5X12 (ESPECIAL)* | VIS FDS SF-M5X12 PKS TORX SPER |
| 53 | 140418 | CLAMP UNEX REF 1201 | BRIDA UNEX 1201 | BRIDE UNEX REF 1201 |
| 54 | 149534 | BICR.WASHER B DIN125-ST 5,3 | ARAN.B DIN125-ST BICR. 5,3 | RONDELLE B BICR.DIN125-ST 5,3 |
| 55 | 322933 | SCREW 414TT85T 4X14 INOX | TORNILLO 414TT85T 4X14 INOX (ESPECIAL) | VIS 414TT85T 4X14 INOX |
| 56 | 147009 | HEX SCREW 8G DIN 933 M-10X25 | TOR.EX.DIN933-8.8 B.TRI.M10X25 | VIS HEX. DIN 933 M-10X25 8G |
| 57 | 149419 | BICR.WASHER B DIN125-ST 13 | ARAN.B DIN125-ST B.TRI.13 | RONDELLE B DIN125-ST BICR.13 |
| 58 | 412825 | WIRE FIXATION PIECE | ESCUADRA FIJACION CABLES | ANGLE FIXATION CABLES |
| 59 | 432138 | WIRE PROTECTION | PROTECCION CABLES | PROTECTION CABLES |
| 60 | 420554 | PIECE | PIEZA POSICIONADORA | PIECE |
| 61 | 420604 | SHOCK-ABSORBER FIXING HOSE | TUBO FIJACION AMORTIGUADOR | TUBE FIXATION AMORTISSEUR |
| 62 | 431452 | PRESSOSTAT HOSE BRACKET | SOPORTE TUBO PRESOSTATO | SUPPORT TUBE PRESSOSTAT |
| 63 | 343434 | SCREW 512TTAET M5X12 | TORNILLO 512TTAET M5X12 (ESPECIAL) | VIS 512TTAET M5X12 |
| 64 | 132290 | CLAMP 301730-8 D50-70 | ABRAZADERA 301730-8 D50- 70 | BRIDE 301730-8 D50-70 |

info@zipnasklade.ru
8(800)500-69-51

# HS-6008/EH020 3

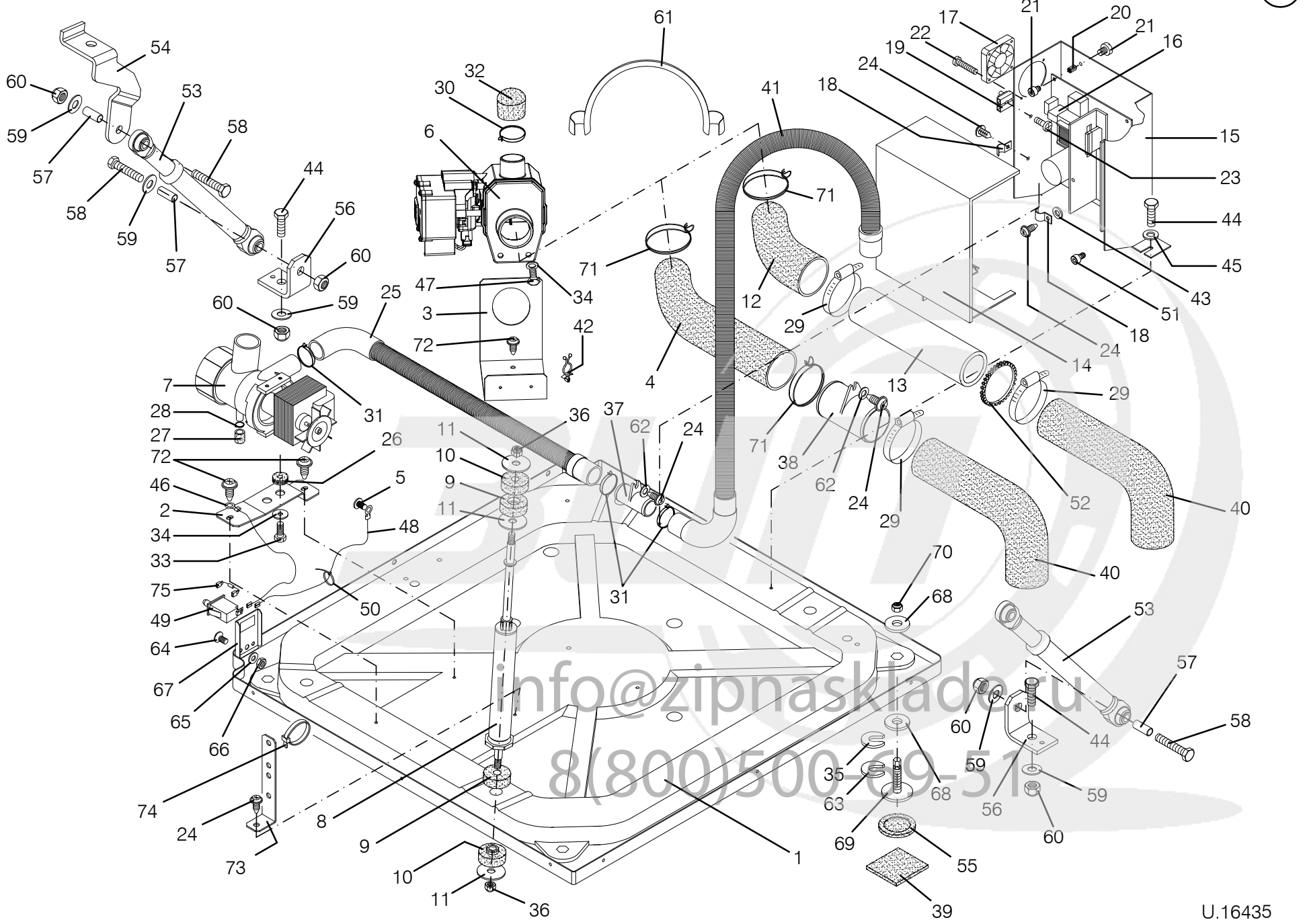


info@zipnasklade.ru
8(800)500-69-51

| Nº | REF | DENOMINATION | DENOMINACIÓN | DENOMINATION |
|---|---|---|---|---|
| 1 | 423483 | BASE | BASE | BASE |
| 2 | 321844 | PUMP BRACKET<br>(FOR PUMP DRAIN) | SOPORTE BOMBA<br>(PARA DESAGÜE POR BOMBA) | SUPPORT POMPE<br>(POUR VIDANGE PAR POMPE) |
| 3 | 322123 | DRAIN BRACKET<br>(FOR GRAVITY DRAIN) | SOPORTE DESAGUE<br>(PARA DESAGÜE POR GRAVEDAD) | SUPPORT VIDANGE<br>(POUR VIDANGE PAR GRAVITE) |
| 4 | 322115 | DRAIN HOSE<br>(FOR GRAVITY DRAIN) | TUBO DESAGUE<br>(PARA DESAGÜE POR GRAVEDAD) | TUBE VIDANGE<br>(POUR VIDANGE PAR GRAVITE) |
| 5 | 322933 | SCREW 414TT85T 4X14 INOX | TORNILLO 414TT85T 4X14 INOX (ESPECIAL) | VIS 414TT85T 4X14 INOX |
| 6 | 600528 | DRAIN G2-O-180<br>(FOR GRAVITY DRAIN) | DESAGÜE G2-O-180<br>(PARA DESAGÜE POR GRAVEDAD) | VIDANGE G2-O-180<br>(POUR VIDANGE PAR GRAVITE) |
| | 600536 | DRAIN G2-C-180<br>(FOR GRAVITY DRAIN) | DESAGÜE G2-C-180<br>(PARA DESAGÜE POR GRAVEDAD) | VIDANGE G2-C-180<br>(POUR VIDANGE PAR GRAVITE) |
| 7 | 323279 | PUMP HANNING FE30B4-114<br>(FOR 220-240/380-415V 50HZ)<br>(FOR THREE-PHASE)<br>(FOR 220/240V 50HZ)<br>(FOR SINGLE-PHASE)<br>(FOR PUMP DRAIN) | BOMBA HANNING FE30B4-114 *<br>(PARA 220-240/380-415V 50HZ)<br>(PARA TRIFASICO)<br>(PARA 220/240V 50HZ)<br>(PARA MONOFASICO)<br>(PARA DESAGÜE POR BOMBA) | POMPE HANNING FE30B4-114<br>(POUR 220-240/380-415V 50HZ)<br>(POUR TRIPHASE)<br>(POUR 220/240V 50HZ)<br>(POUR MONOPHASE)<br>(POUR VIDANGE PAR POMPE) |
| | 323287 | PUMP HANNING DP40B-115<br>(FOR 120V 60HZ)<br>(FOR PUMP DRAIN) | BOMBA HANNING DP40B-115 *<br>(PARA 120V 60HZ)<br>(PARA DESAGÜE POR BOMBA) | POMPE HANNING DP40B-115<br>(POUR 120V 60HZ)<br>(POUR VIDANGE PAR POMPE) |
| | 326652 | PUMP HANNING FE30B4-118<br>(FOR 208-240V 60HZ)<br>(FOR PUMP DRAIN) | BOMBA HANNING FE30B4-118 *<br>(PARA 208-240V 60HZ)<br>(PARA DESAGÜE POR BOMBA) | POMPE HANNING FE30B4-118<br>(POUR 208-240V 60HZ)<br>(POUR VIDANGE PAR POMPE) |
| 8 | 323238 | SHOCK-ABSORBER 00830058B | AMORT.-MUELLE SUSPA 00830058B* | AMORTISSEUR 00830058B |
| 9 | 323253 | BLACK RUBBER SUSPA 06100092E | GOMA NEGRA SUSPA 06100092E | GOMME NOIRE SUSPA 06100092E |
| 10 | 323246 | BLACK RUBBER SUSPA 06100083G | GOMA NEGRA SUSPA 06100083G | GOMME NOIRE SUSPA 06100083G |
| 11 | 323261 | WASHER 36,5X10,5X2 05800014 | .RANDELA 36,5X10,5X2 05800014 | RONDELLE 36,5X10,5X2 05800014 |
| 12 | 430900 | DRAIN HOSE<br>(EH020G)<br>(FOR GRAVITY DRAIN) | TUBO DESAGÜE<br>(EH020G)<br>(PARA DESAGÜE POR GRAVEDAD) | TUBE VIDANGE<br>(EH020G)<br>(POUR VIDANGE PAR GRAVITE) |
| 13 | 430892 | DRAIN HOSE<br>(EH020G)<br>(FOR GRAVITY DRAIN) | TUBO DESAGÜE<br>(EH020G)<br>(PARA DESAGÜE POR GRAVEDAD) | TUBE VIDANGE<br>(EH020G)<br>(POUR VIDANGE PAR GRAVITE) |
| 14 | 323105 | INVERTER COVER | TAPA VARIADOR | COUVERCLE CONVERTISSEUR |
| 15 | 326033 | INVERTER PLATE | PLACA CONVERTIDOR | PLAQUE CONVERTISSEUR |
| 16 | 513663 | SET INVERTER | CONVERTIDOR COMPLETO | CONVERTISSEUR COMPLET |

info@zipnasklade.ru
8(800)500-69-51

| Nº | REF | DENOMINATION | DENOMINACIÓN | DENOMINATION |
|---|---|---|---|---|
| 17 | 323089 | INVERTER FAN | VENTILADOR CONVERTIDOR | VENTILATEUR CONVERTISSEUR |
| 18 | 323055 | ALUMINIUM CLAMP AL2 | ABRAZADERA ALUMINIO AL2 | BRIDE ALUMINIUM AL2 |
| 19 | 195818 | CONNECTION BOARD (2 ELEMENT) | REGLETA CINTISA 230DS (2ELEM) | BORNIER (2 ELEMENTS) |
| 20 | 323063 | SEPARATOR HEX.HTSB-M4-10-7-1 (4 UNITS) | SEPARADOR HEX.HTSB-M4-10-7-1 (4 UNIDADES) | SEPARATEUR HEX.HTSB-M4-10-7-1 (4 UNITES) |
| | 513655 | HEX SEPARATOR HTSN-M4-10-8-2 (1 UNIT) | SEPARADOR HEX.HTSN-M4-10-8-2 (1 UNIDAD) | SEPARATEUR HEX HTSN-M4-10-8-2 (1 UNITE) |
| 21 | 10315091 | ALLEN SCREW DIN 912 8,8 M4x5 TRIVALENT | TORNILLO ALLEN DIN 912 8,8 M4x5 TRIVALEN | VIS ALLEN DIN 912 8,8 M4x5 TRIVALENT |
| 22 | 332627 | SCREW REF. TT85 T M3 X16 | TOR. REF. TT85 T M3 X16 | VIS REF.TT85 T M3 X16 |
| 23 | 322693 | SCREW PT KN35X10 WN1412 | TORNILLO PT KN35X10 WN1412 (ESPECIAL) | VIS PT KN35X10 WN1412 |
| 24 | 322750 | SCREW FDS SF-M5X12 PKS TORX SPER | TORNILLO FDS SF-M5X12 (ESPECIAL)* | VIS FDS SF-M5X12 PKS TORX SPER |
| 25 | 323444 | HOSE 21/21 L0,45M (FOR PUMP DRAIN) | TUBO COARRUGADO 21/21 L0,45M * (PARA DESAGÜE POR BOMBA) | TUBE 21/21 L 0,45M (POUR VIDANGE PAR POMPE) |
| 26 | 323337 | WIRE-STOP REF.222 (FOR PUMP DRAIN) | PASACABLE REF.222 (PARA DESAGÜE POR BOMBA) | PASSECABLE REF.222 (POUR VIDANGE PAR POMPE) |
| 27 | 322198 | PUMP PLUG (FOR PUMP DRAIN) | TAPON BOMBA (PARA DESAGÜE POR BOMBA) | BOUCHON POMPE (POUR VIDANGE PAR POMPE) |
| 28 | 323543 | CLAMP FIM 12128 B12,8 (FOR PUMP DRAIN) | ABRAZ.FIM 12128 B12,8 (PARA DESAGÜE POR BOMBA) | COLLIER FIM 12128 B12,8 (POUR VIDANGE PAR POMPE) |
| 29 | 132290 | CLAMP 301730-8 D50-70 (FOR GRAVITY DRAIN) | ABRAZADERA 301730-8 D50- 70 (PARA DESAGÜE POR GRAVEDAD) | BRIDE 301730-8 D50-70 (POUR VIDANGE PAR GRAVITE) |
| 30 | 149609 | CLAMP 25-40 (FOR GRAVITY DRAIN) | ABRAZADERA 25- 40 * (PARA DESAGÜE POR GRAVEDAD) | BRIDE 25-40 (POUR VIDANGE PAR GRAVITE) |
| 31 | 323550 | CLAMP FIM 28300 B30 (FOR PUMP DRAIN) | ABRAZ.FIM 28300 B30 (PARA DESAGÜE POR BOMBA) | COLLIER FIM 28300 B30 (POUR VIDANGE PAR POMPE) |
| 32 | 135004 | CONICAL END-PIECE REPRIMSA R16 (FOR GRAVITY DRAIN) | TOPE CONICO REPRIMSA R-16 D30 (PARA DESAGÜE POR GRAVEDAD) | ARRET CONIQUE REPRIMSA R16 D30 (POUR VIDANGE PAR GRAVITE) |
| 33 | 146233 | BICR.HEX SCREW DIN933-8 M6X15 (FOR PUMP DRAIN) | TOR.EX.DIN933-8.8 B.TRI.M 6X15 (PARA DESAGÜE POR BOMBA) | VIS HEX DIN933-8.8 BICR.M6X15 (POUR VIDANGE PAR POMPE) |
| 34 | 122259 | WASHER 20X6X1,5 | ARANDELA 20X6X1.5 INOX | RONDELLE 20X6X1,5 |
| 35 | 427468 | WASHER 25X10,3X1,5 | ARANDELA ABIERTA 25X10,3X1,5 | RONDELLE 25X10,3X1,5 |
| 36 | 164285 | SELF-LOCKING NUT DIN985-8 B.TRI.M8 | TUER.AUTOBL.DIN985-8 B.TRI.M8 | ECROU AUTOBLOCANT DIN985-8 B.TRI.M8 |
| 37 | 322131 | DRAIN PUMP SLEEVE (FOR PUMP DRAIN) | MANGUITO BOMBA DESAGUE (PARA DESAGÜE POR BOMBA) | MANCHON POMPE VIDANGE (POUR VIDANGE PAR POMPE) |

info@zipnasklade.ru
8(800)500-69-51

| Nº | REF | DENOMINATION | DENOMINACIÓN | DENOMINATION |
|---|---|---|---|---|
| 38 | 322149 | DRAIN SLEEVE<br>(FOR GRAVITY DRAIN)<br>(NO EH020G) | MANGUITO DESAGUE<br>(PARA DESAGÜE POR GRAVEDAD)<br>(NO EH020G) | MANCHON VIDANGE<br>(POUR VIDANGE PAR GRAVITE)<br>(NON EH020G) |
| 39 | 420893 | LEVELLING PIECE | PIEZA NIVELACION | PIECE NIVELLEMENT |
| 40 | 326454 | RUBBER ELBOW D50X200X100<br>(FOR GRAVITY DRAIN) | CODO GOMA D50X200X100<br>(PARA DESAGÜE POR GRAVEDAD) | COUDE GOMME D50X200X100<br>(POUR VIDANGE PAR GRAVITE) |
| 41 | 323436 | HOSE 21X21 L 1,5M<br>(FOR PUMP DRAIN) | TUBO COARRUGADO 21X21 L1,5M *<br>(PARA DESAGÜE POR BOMBA) | TUBE 21X21 L 1,5M<br>(POUR VIDANGE PAR POMPE) |
| 42 | 199893 | CLAMP STL-450-3-01 | ABRAZADERA STL-450-3-01 | BRIDE STL-450-3-01 |
| 43 | 149526 | BICR.WASHER B DIN125-ST 6,4 | ARAN.B DIN125-ST B.TRI. 6,4 | RONDELLE B DIN125-ST BICR.6,4 |
| 44 | 146399 | BICR HEX SCREW DIN933-8 M8X20 | TOR.EX.DIN933-8.8 B.TRI.M 8X20 | VIS HEX DIN933-8.8 BICR.M8X20 |
| 45 | 327080 | WASHER 29X8,5X4 | ARANDELA 30X8.5X4 TRIVALEN. | RONDELLE 29X8,5X4 |
| 46 | 342188 | DRAIN GROUND CABLE | CABLE TIERRA DESAGÜE | PRISE DE TERRE VIDANGE |
| 47 | 146282 | BICR.HEX SCREW DIN933-8 M 5X15 | TOR.EX.DIN933-8.8 B.TRI.M 5X15 | VIS HEX BICR.DIN933-8.8 M 5X15 |
| 48 | 342196 | MOTOR GROUND CABLE | CABLE TIERRA MOTOR | PRISE DE TERRE MOTEUR |
| 49 | 323048 | MINISWITCH CHERRY E69-60C | MINIRRUPTOR CHERRY E69-60C | MINIRRUPTEUR CHERRY E69-60C |
| 50 | 322644 | CLAMP BT-4 | ABRAZADERA BT-4-01-NT | BRIDE BT-4 |
| 51 | 161646 | ALLEN SCREW DIN 912 M-4X8 | TOR.ALLDIN912-8.8 B.TRI.M 4X 8 | VIS ALLEN DIN 912 M-4X8 |
| 52 | 341438 | CASTING MGS-1-01<br>(EH020G)<br>(FOR GRAVITY DRAIN) | MOLDURA MGS-1-01<br>(EH020G)<br>(PARA DESAGÜE POR GRAVEDAD) | MOULE MGS-1-01<br>(EH020G)<br>(POUR VIDANGE PAR GRAVITE) |
| 53 | 193912 | SHOCK-ABSORBER CIMA AJ/14050 120N | AMORT.FRICC.CIMA AJ/14050 120N | AMORTISSEUR CIMA AJ/14050 120N |
| 54 | 327171 | SHOCK-ABSORBER FIXING | FIJACION SUPERIOR AMORTIGUADOR | FIXATION SUPERIEURE AMORTIS. |
| 55 | 332403 | LEG RUBBER | GOMA PATA | GOMME PIED |
| 56 | 327163 | SHOCK-ABSORBER LOER FIXING | FIJACION INFERIOR AMORTIGUADOR | FIXATION INFERIEUR AMORTISSEUR |
| 57 | 420604 | SHOCK-ABSORBER FIXING HOSE | TUBO FIJACION AMORTIGUADOR | TUBE FIXATION AMORTISSEUR |
| 58 | 181867 | HEX SCREW DIN933 M8X40 | TOR.EX.DIN933-8.8 B.TRI.M 8X40 | VIS HEX DIN933 M8X40 |
| 59 | 149518 | BICR.WASHER B DIN125-ST 8,4 | ARAN.B DIN125-ST B.TRI. 8,4 | RONDELLE.B DIN125-ST BICR.8,4 |
| 60 | 164285 | SELF-LOCKING NUT DIN985-8 B.TRI.M8 | TUER.AUTOBL.DIN985-8 B.TRI.M8 | ECROU AUTOBLOCANT DIN985-8 B.TRI.M8 |
| 61 | 328542 | HOOK FOR HOSE | GANCHO PARA TUBO COARRUGADO * | CROCHET POUR TUBE |
| 62 | 149534 | BICR.WASHER B DIN125-ST 5,3 | ARAN.B DIN125-ST BICR. 5,3 | RONDELLE B BICR.DIN125-ST 5,3 |

info@zipnasklade.ru
8(800)500-69-51

| Nº | REF | DENOMINATION | DENOMINACIÓN | DENOMINATION |
|---|---|---|---|---|
| 63 | 332585 | OPEN WASHER 25X10,3X3 | ARANDELA ABIERTA 25X10,3X3 | RONDELLE OUVERTE 25X10,3X3 |
| 64 | 147611 | SCREW DIN963-4.8 BICR M 4X10 | TOR.AV.DIN7991 B.TRI.M 4X10 | VIS AV DIN963-4.8 BICR M 4X10 |
| 65 | 149476 | BICR.WASHER B DIN125-ST 4,3 | ARAN.B DIN125-ST B.TRI. 4,3 | RONDELLE B DIN125-ST BICR.4,3 |
| 66 | 150185 | BICR.HEX.NUT DIN934-8 M4 | TUER.EX.DIN934-8 B.TRI.M 4 | ECROU HEX.DIN934-8 BICR.M4 |
| 67 | 326512 | BASE MICROSWITCH BRACKET | SOPORTE MICRORRUPTOR BASE | SUPPORT MICRORRUPTEUR BASE |
| 68 | 420901 | WASHER 25X12.2X3 TRIVALENT | ARANDELA 25X12.2X3 TRIVALENTE | RONDELLE 25X12.2X3 TRIVALENT |
| 69 | 332551 | LEG SCREW | TORNILLO PATA | VIS PIED |
| 70 | 150649 | SELF-LOCKING NUT DIN985-8 B.TRI.M10 | TUER.AUTOB.DIN985-8 B.TRI.M10 | ECROU AUTOBLOCANT DIN985-8 B.TRI.M10 |
| 71 | 409755 | CLAMP FIM 35574 B57,4<br>(FOR GRAVITY DRAIN) | ABRAZ.FIM 35574 B57,4<br>(PARA DESAGÜE POR GRAVEDAD) | COLLIER FIM 35574 B57,4<br>(POUR VIDANGE PAR GRAVITE) |
| 72 | 343434 | SCREW 512TTAET M5X12 | TORNILLO 512TTAET M5X12 (ESPECIAL) | VIS 512TTAET M5X12 |
| 73 | 440446 | DRAIN HOSE BRACKET<br>(FOR PUMP DRAIN) | SOPORTE TUBO DESAGÜE<br>(PARA DESAGÜE POR BOMBA) | SUPPORT TUBE VIDANGE<br>(POUR VIDANGE PAR POMPE) |
| 74 | 140525 | CLAMP 2244-0<br>(FOR PUMP DRAIN) | BRIDA UNEX 2244-0 *<br>(PARA DESAGÜE POR BOMBA) | BRIDE 2244-0<br>(POUR VIDANGE PAR POMPE) |
| 75 | 433219 | UNLOADING HEATER | RESISTENCIA DE DESCARGA | RESISTANCE DE DECHARGEMENT |
| | | WITHOUT ILLUSTRATION<br>PIECES FIXATION DE TRANSPORT | SIN ILUSTRACION<br>PIEZAS FIJACION TRANSPORTE | SANS ILLUSTRATION<br>SHIPPING FASTENING PIECES |
| | 322875 | TRANSPORT FIXING PIECE | FIJACION TRANSPORTE | FIXATION TRANSPORT |
| | 322883 | SHOCK-ABSORBER PROTECTION | PROTECCION AMORTIGUADORES | PROTECTION AMORTISSEURS |
| | 322867 | TRANSPORT CLAMP | ABRAZADERA TRANSPORTE | BRIDE TRANSPORT |
| | 150201 | BICR.HEX NUT DIN 934-8 M-8 | TUER.EX.DIN934-8 B.TRI.M 8 | ECROU HEX.DIN 934-8 BICR.M-8 |
| | 149518 | BICR.WASHER B DIN125-ST 8,4 | ARAN.B DIN125-ST B.TRI. 8,4 | RONDELLE.B DIN125-ST BICR.8,4 |

info@zipnasklade.ru
8(800)500-69-51

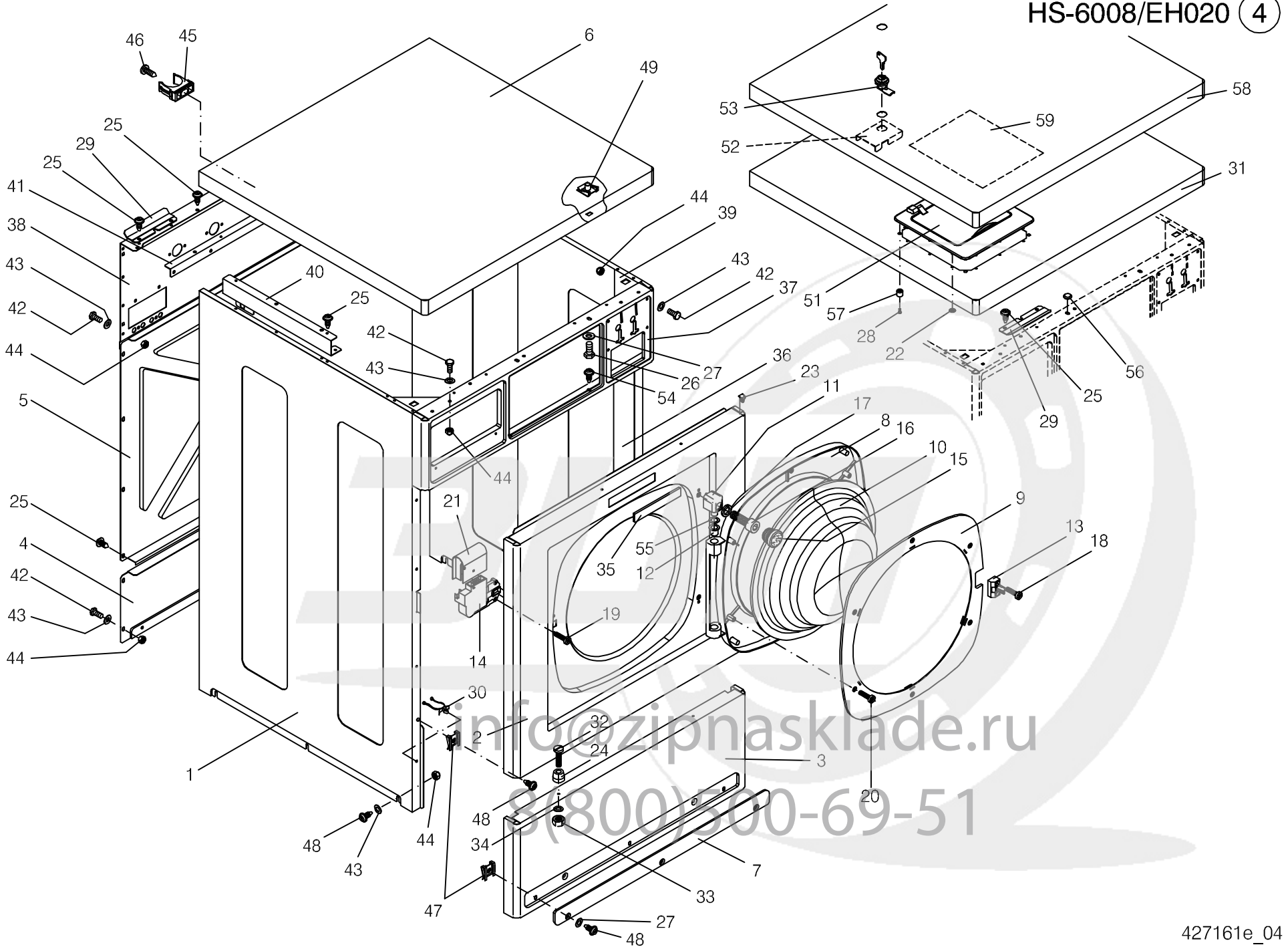


info@zipnasklade.ru
8(800)500-69-51

| Nº | REF | | DENOMINATION | DENOMINACIÓN | DENOMINATION |
|---|---|---|---|---|---|
| 1 | 426973 | | LEFT SIDE PANEL<br>(INOX) | TAPA LATERAL IZQUIERDA<br>(INOX) | COUVERCLE LATERAL GAUCHE<br>(INOX) |
| | 445577 | | LEFT SIDE COVER<br>(PRE-COATED) | TAPA LATERAL IZQUIERDA<br>(PRE-COATED) | COUVERCLE LATERAL GAUCHE<br>(PRE-COATED) |
| 2 | 410597 | | FRONT PANEL<br>(INOX) | TAPA FRONTAL<br>(INOX) | COUVERCLE FRONTAL<br>(INOX) |
| | 528455 | | FRONT PANEL<br>(PRE-COATED) | TAPA FRONTAL<br>(PRE-COATED) | COUVERCLE FRONTAL<br>(PRE-COATED) |
| 3 | 322917 | | LOWER FRONT COVER<br>(INOX) | T. FRONTAL INFERIOR INOX<br>(INOX) | COUVERCLE FRONTAL INFERIEUR<br>(INOX) |
| | 528448 | | LOWER FRONT COVER<br>(PRE-COATED) | T. FRONTAL INFERIOR PRECOATED<br>(PRE-COATED) | COUVERCLE FRONTAL INFERIEUR<br>(PRE-COATED) |
| 4 | 321794 | | LOWER REAR PANEL | TAPA POSTERIOR INFERIOR | COUVERCLE ARRIERE INFERIEUR |
| 5 | 321786 | | CENTRAL REAR PANEL | TAPA POSTERIOR CENTRAL | COUVERCLE ARRIERE CENTR. |
| 6 | 323840 | | TOP PANEL<br>(INOX)<br>(FOR FRONT DISPENSER) | TAPA SUPERIOR<br>(INOX)<br>(PARA DOSIFICADOR FRONTAL) | COUVERCLE SUPERIEUR<br>(INOX)<br>(POUR BAC A PRODUITS FRONTAL) |
| | 445528 | | UPPER COVER<br>(PRE-COATED)<br>(FOR FRONT DISPENSER) | TAPA SUPERIOR<br>(PRE-COATED)<br>(PARA DOSIFICADOR FRONTAL) | COUVERCLE SUPERIEUR<br>(PRE-COATED)<br>(POUR BAC A PRODUITS FRONTAL) |
| | 609651 | | UPPER COVER SET | CONJUNTO TAPA SUPERIOR | ENSEMBLE COUVERCLE SUPERIEUR |
| 7 | 323808 | | TOE PLATE | ZOCALO | PLAQUE HABILLAGE INF. |
| 8 | 321646 | | DOOR | CUERPO ESCOTILLA | HUBLOT |
| | 432278 | & | DOOR<br>(PAINTED IN INOX EFFECT) | CUERPO ESCOTILLA<br>(PINTADO EFECTO INOX) | HUBLOT<br>(PEINT EFFET INOX) |
| 9 | 322859 | & | SPYHOLE PLATE | PORTA-MIRILLA | PLAQUE VITRE |
| 10 | 321596 | & | GLASS | MIRILLA | VITRE |
| 11 | 321620 | | HINGE | BISAGRA | CHARNIÈRE |
| | 432286 | | HINGE<br>(PAINTED IN INOX EFFECT) | BISAGRA<br>(PINTADO EFECTO INOX) | CHARNIÈRE<br>(PEINT EFFET INOX) |
| 12 | 322925 | | SLEEVE IGLIDUR GFM-1416-17 | COJINETE SKF PPMF 141617 | FRETTE IGLIDUR GFM-1416-17 |
| 13 | 440511 | | LOCKING HOOK BITRON | GANCHO CIERRE BITRON | CROCHET FERMETURE BITRON |
| 14 | 333302 | | LOCKING BITRON BP P/5 DL-S1 | CIERRE BITRON BP P/5 DL-S1 * | FERMETURE BITRON BP P/5 DL-S1 |
| 15 | 322974 | | PLUG KAPSTO GPN320GL18 | TAPON KAPSTO GPN320GL18 | BOUCHON KAPSTO GPN320GL18 |

info@zipnasklade.ru
8(800)500-69-51

| Nº | REF | DENOMINATION | DENOMINACIÓN | DENOMINATION |
|---|---|---|---|---|
| 16 | 316695 | ALLEN SCREW DIN7984-8 M8X 25 | TOR.ALLDIN7984-8.8B.TRI.M 8X25 | VIS ALLEN DIN7984-8.8 B.M8X 25 |
| 17 | 318253 | WASHER 8 | ARAN.ESPECIAL TORN.DIN912 M 8 | RONDELLE 8 |
| 18 | 322933 | SCREW 414TT85T 4X14 INOX | TORNILLO 414TT85T 4X14 INOX (ESPECIAL) | VIS 414TT85T 4X14 INOX |
| 19 | 322990 | SCREW 4510RFAT INOX 4.5X10 | TORNILLO 4510RFAT INOX 4.5X10 (ESPECIAL) | VIS 4510RFAT INOX 4.5X10 |
| 20 | 344085 | SCREW 48TT85T 4X8 INOX | TORNILLO 48TT85T 4X8 INOX (ESPECIAL) | VIS 48TT85T 4X8 INOX |
| 21 | 333070 | LOCKING PROTECTION | PROTECCION CIERRE | PROTECTION FERMETURE |
| 22 | 193540 | MIKALOR QUICK FIXING 211038-8<br>(FOR TOP DISPENSER) | SUJEC.RAPIDA MIKALOR 211038-8<br>(PARA DOSIFICADOR SUPERIOR) | FIXATION RAPIDE MIKALOR 211038-8<br>(POUR BAC A PRODUITS SUPERIEUR |
| 23 | 323717 | END PIECE | CANTONERA | ARRET |
| 24 | 322909 | LOWER PANEL PIVOT | PIVOTE TAPA INFERIOR | PIVOT COUVERCLE INFERIEUR |
| 25 | 322750 | SCREW FDS SF-M5X12 PKS TORX SPER | TORNILLO FDS SF-M5X12 (ESPECIAL)* | VIS FDS SF-M5X12 PKS TORX SPER |
| 26 | 146233 | BICR.HEX SCREW DIN933-8 M6X15<br>(FOR FRONT DISPENSER) | TOR.EX.DIN933-8.8 B.TRI.M 6X15<br>(PARA DOSIFICADOR FRONTAL) | VIS HEX DIN933-8.8 BICR.M6X15<br>(POUR BAC A PRODUITS FRONTAL) |
| 27 | 115733 | WASHER 16X7X3 | ARANDELA 16X7X3 TRIVALEN. | RONDELLE 16X7X3 |
| 28 | 326660 | SCREW 412RFX87T INOXA2 4X12<br>(FOR TOP DISPENSER) | TORNILLO 412RFX87T INOXA2 4X12(ESPECIAL)<br>(PARA DOSIFICADOR SUPERIOR) | VIS 412RFX87T INOXA2 4X12<br>(POUR BAC A PRODUITS SUPERIEUR |
| 29 | 321836 | TOP PANEL CLIP | GRAPA TAPA SUPERIOR | CLIP COUVERCLE SUPERIEUR |
| 30 | 199893 | CLAMP STL-450-3-01 | ABRAZADERA STL-450-3-01 | BRIDE STL-450-3-01 |
| 31 | 427013 | TOP PANEL<br>(INOX)<br>(FOR TOP DISPENSER) | TAPA SUPERIOR<br>(INOX)<br>(PARA DOSIFICADOR SUPERIOR) | COUVERCLE SUPERIEUR<br>(INOX)<br>(POUR BAC A PRODUITS SUPERIEUR |
| | 445536 | UPPER COVER<br>(PRE-COATED)<br>(FOR TOP DISPENSER) | TAPA SUPERIOR<br>(PRE-COATED)<br>(PARA DOSIFICADOR SUPERIOR) | COUVERCLE SUPERIEUR<br>(PRE-COATED)<br>(POUR BAC A PRODUITS SUPERIEUR |
| 32 | 146134 | BICR CYL SCREW DIN84 M-5X20 | TOR.CIL.DIN84-4.8 B.TRI.M 5X20 | VIS CYL BICR DIN84-4.8 M-5X20 |
| 33 | 176826 | SELF-LOCKING NUT DIN985-8 B.TRI.M5 | TUER.AUTOBL.DIN985-8 B.TRI.M5 | ECROU AUTOBLOCANT DIN 985-8 B.TRI.M5 |
| 34 | 149534 | BICR.WASHER B DIN125-ST 5,3 | ARAN.B DIN125-ST BICR. 5,3 | RONDELLE B BICR.DIN125-ST 5,3 |
| 35 | 326074 | PLATE GIRBAU | PLACA GIRBAU | PLAQUE GIRBAU |
| | 326082 | PLATE CONTINENTAL GIRBAU<br>(EH020) | PLACA CONTINENTAL GIRBAU<br>(EH020) | PLAQUE CONTINENTAL GIRBAU<br>(EH020) |
| | 327023 | PLATE VIKING | PLACA VIKING | PLAQUE VIKING |
| 36 | 426981 | RIGHT SIDE PANEL<br>(INOX) | TAPA LATERAL DERECHA<br>(INOX) | COUVERCLE LATERAL DROIT<br>(INOX) |

info@zipnasklade.ru
8(800)500-69-51

| Nº | REF | DENOMINATION | DENOMINACIÓN | DENOMINATION |
|---|---|---|---|---|
| | 445619 | RIGHT SIDE COVER<br>(PRE-COATED) | TAPA LATERAL DERECHA<br>(PRE-COATED) | COUVERCLE LATERAL DROIT<br>(PRE-COATED) |
| 37 | 412718 | CONTROL PANEL | PANEL DE MANDOS | PANNEAU COMMANDE |
| 38 | 338996 | REAR PLATE | PANEL POSTERIOR | COUVERCLE ARRIERE |
| 39 | 322073 | BRACKET | CARTELA | SUPPORT |
| 40 | 322081 | SOAP DISPENSER BRACKET | SOPORTE DOSIFICADOR | SUPPORT BAC A PRODUITS |
| 41 | 326017 | INSTALATION FIXATION PIECE | ESCUADRA FIJACION INSTALACION | PIECE FIXATION INSTALLATION |
| 42 | 327064 | HEX SCREW DIN 933 8,8 M5x12 TRIVALENT | TORNILLO HEXAGONAL DIN 933 8,8 M5x12 TRI | VIS HEXAGONALE DIN 933 8,8 M5x12 TRIVALE |
| 43 | 327072 | SCREW WASHER DIN912 M 5 | ARAN.ESPECIAL TORN.DIN912 M 5 | RONDELLE VIS DIN912 M 5 |
| 44 | 176826 | SELF-LOCKING NUT DIN985-8 B.TRI.M5 | TUER.AUTOBL.DIN985-8 B.TRI.M5 | ECROU AUTOBLOCANT DIN 985-8 B.TRI.M5 |
| 45 | 327361 | CLIP REF.221025 | CLIP ISOFIX REF.201025 | CLIP REF.221025 |
| 46 | 149153 | PLATE SCREW ST-4, 80 P.C. A/AL.T25 | TORNILLO CHAPA ST-4 (ESPECIAL)* | VIS PLAQUE ST-4, 80 P.C. A/AL.T25 |
| 47 | 328575 | QUICK NUT TRT M5-1 0212831-6 | TUER.RAPIDA TRT M5-1 0212831-6 | ECROU RAPIDE TRT M5-1 |
| 48 | 328237 | SCREW T20 AR.18ESTR. M5X15 | TORNILLO C.ALOM.T20 M5X15 (ESPECIAL)* | VIS T20 AR.18ESTR. M5X15 |
| 49 | 332114 | NUT M6<br>(FOR FRONT DISPENSER) | TUER.RAPIDA TRT M6-1 0212827<br>(PARA DOSIFICADOR FRONTAL)<br>. | ECROU M6<br>(POUR BAC A PRODUITS FRONTAL) |
| 50 | 343087 | CANCELLED<br>(FOR TOP DISPENSER) | ANULADO<br>(PARA DOSIFICADOR SUPERIOR) | ANNULE<br>(POUR BAC A PRODUITS SUPERIEUR |
| 51 | 517136 | UPPER SOAP DISPENSER LID CC-USA<br>(FOR TOP DISPENSER)<br>(EH020) | TAPA DOSIFICADOR SUP.CC-USA<br>(PARA DOSIFICADOR SUPERIOR)<br>(EH020) | COUVERCLE BAC A PRODUITS SUP. CC-USA<br>(POUR BAC A PRODUITS SUPERIEUR<br>(EH020) |
| | 517508 | UPPER SOAP DISPENSER LID<br>(FOR TOP DISPENSER)<br>(HS-6008) | TAPA DOSIFICADOR SUP.<br>(PARA DOSIFICADOR SUPERIOR)<br>(HS-6008) | COUVERCLE BAC A PRODUITS SUP.<br>(POUR BAC A PRODUITS SUPERIEUR<br>(HS-6008) |
| 52 | 440479 | UPPER COVER REINFORT<br>(FOR TOP DISPENSER) | REFUERZO TAPA SUPERIOR<br>(PARA DOSIFICADOR SUPERIOR) | RENFORT COUVERCLE SUPERIEURE<br>(POUR BAC A PRODUITS SUPERIEUR |
| 53 | 196915 | LOCK RE.20.00.02.05<br>(FOR TOP DISPENSER) | CERRADURA REF.20.00.02.05 *<br>(PARA DOSIFICADOR SUPERIOR) | FERMETURE REF.20.00.02.05<br>(POUR BAC A PRODUITS SUPERIEUR |
| | 196923 | LOCK KEY RE.10.41.213<br>(FOR TOP DISPENSER) | LLAVE REF.10.41.213 COMB.T-205<br>(PARA DOSIFICADOR SUPERIOR) | CLE FERMETURE REF.10.41.213<br>(POUR BAC A PRODUITS SUPERIEUR |
| 54 | 320911 | SCREW FTX512FT85T INOX A2 M5X12 | TOR.FTX512FT85T INOX A2 M5X12 (ESPECIAL) | VIS FTX512FT85T INOX A2 M5X12 |
| 55 | 343426 | WASHER P15X22X0,1 DIN988 | ARAN.AJUSTE PS15X22X0,1 DIN988 | RONDELLE PS15X22X0,1 DIN988 |
| 56 | 514695 | BLIND WIRETHROUGH REF.1013 | PASACABLE CIEGO REF-1013 | PASSECABLES AUVEGLE REF.1013 |

info@zipnasklade.ru
8(800)500-69-51

| Nº | REF | DENOMINATION | DENOMINACIÓN | DENOMINATION |
|---|---|---|---|---|
| 57 | 444398 | FRAME FIXATION SLEEVE<br>(FOR TOP DISPENSER) | CASQUILLO FIJACION MARCO<br>(PARA DOSIFICADOR SUPERIOR) | FRETTE FIXATION CADRE<br>(POUR BAC A PRODUITS SUPERIEUR |
| 58 | 609651 | UPPER COVER SET<br>(FOR TOP DISPENSER)<br>(FOR BLIND COVER MACHINES)<br>(PRE-COATED) | CONJUNTO TAPA SUPERIOR<br>(PARA DOSIFICADOR SUPERIOR)<br>(PARA MODELOS CON TAPA CIEGA)<br>(PRE-COATED) | ENSEMBLE COUVERCLE SUPERIEUR<br>(POUR BAC A PRODUITS SUPERIEUR<br>(POUR MACHINES AVEC COUVERCLE AVEUGLE)<br>(PRE-COATED) |
| | 10125383 | UPPER COVER SET<br>(FOR TOP DISPENSER)<br>(FOR BLIND COVER MACHINES)<br>(INOX) | CONJUNTO TAPA SUPERIOR<br>(PARA DOSIFICADOR SUPERIOR)<br>(PARA MODELOS CON TAPA CIEGA)<br>(INOX) | ENSEMBLE COUVERCLE SUPERIEUR<br>(POUR BAC A PRODUITS SUPERIEUR<br>(POUR MACHINES AVEC COUVERCLE AVEUGLE)<br>(INOX) |
| 59 | 590539 | TOP COVER BLIND PROTECTOR<br>(FOR TOP DISPENSER)<br>(FOR BLIND COVER MACHINES) | PROTECTOR TAPA SUPERIOR CIEGA*<br>(PARA DOSIFICADOR SUPERIOR)<br>(PARA MODELOS CON TAPA CIEGA) | AVEUGLE SUPERIEUR PROTECTEUR COUVERCLE<br>(POUR BAC A PRODUITS SUPERIEUR<br>(POUR MACHINES AVEC COUVERCLE AVEUGLE) |
| | | WITHOUT ILLUSTRATION | SIN ILUSTRACION | SANS ILLUSTRATION |
| | 793547 | KIT SUP. DOS.COVER .CC- USA<br>(EH020) | KIT TAPA DOSIFICADOR SUP. CC-USA<br>(EH020) | KIT.SUP.DOS.COUVERCLE.CC -USA<br>(EH020) |
| | 793927 | KIT SUP. DOS.COVER .(NO CC-USA)<br>(HS-6008) | KIT TAPA DOSIFICADOR SUP. (NO CC-USA)<br>(HS-6008) | KIT.SUP.DOS.COUVERCLE.(NO CC-USA)<br>(HS-6008) |
| | 601948 & | DOOR ASSEMBLY | ESCOTILLA | ESCOTILLA |

info@zipnasklade.ru
8(800)500-69-51

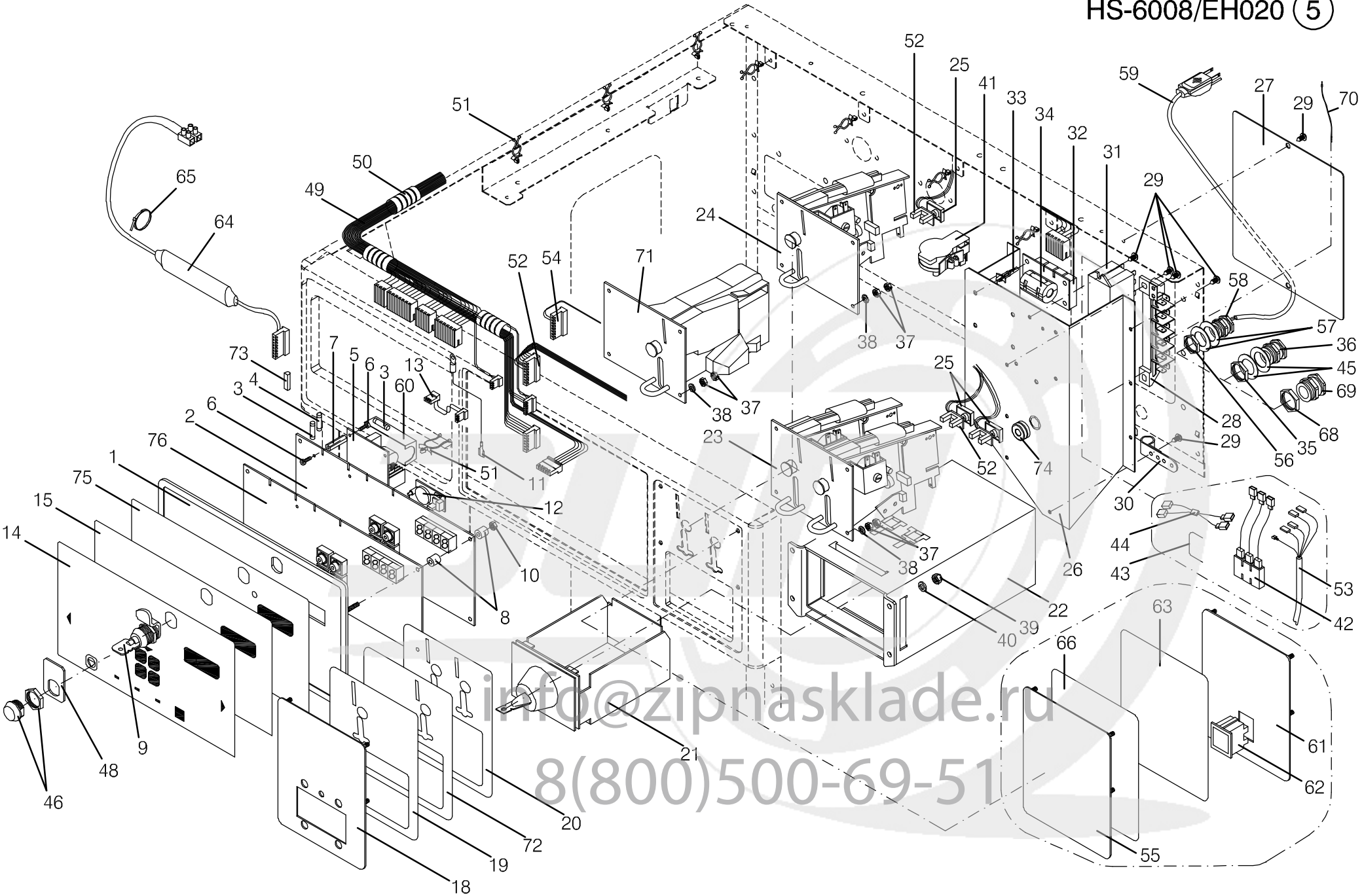


info@zipnasklade.ru
8(800)500-69-51

U.16440

| Nº | REF | DENOMINATION | DENOMINACIÓN | DENOMINATION |
|---|---|---|---|---|
| 1 | 594796 | CONTROL PANEL PLATE | PLACA PANEL DE MANDOS | PLAQUE PANNEAU DE COMMANDES |
| 2 | 594515 | MICROP. BOARD H6008/M610 LC/CC | PLACA MICROP.H6008/M610 LC/CC | PLAQUE MICROP. H6008/M610 LC/CC |
| 3 | 322941 | FUSE SPT 2,5A | CART.FUSIB.SPT 0001.2508 2,5A* | CARTOUCHE FUSIB.2,5A |
| 4 | 326371 | FUSE FST 8A | CART.FUSIB.FST 0034.5244 8 A* | CARTOUCHE FUSIBLE FST 8A |
| 5 | 332718 | POWER SOURCE MW PS-25-12 | FUENTE ALIMENT.MW PS-25-12 | FONT ALIMENT.MW PS-25-12 |
| 6 | 322693 | SCREW PT KN35X10 WN1412 | TORNILLO PT KN35X10 WN1412 (ESPECIAL) | VIS PT KN35X10 WN1412 |
| 7 | 322685 | SEPARATOR HEX.HS6-8 | SEPARADOR EXAGONAL HS6-8 | SEPARATEUR HEX. HS6-8 |
| 8 | 322768 | MICRO BOARD SEPARATOR | SEPARADOR PLACA MICRO | SEPARATEUR PLAQUE MICRO |
| 9 | 323881 | LOCKING<br>(FOR FRONT DISPENSER) | CIERRE<br>(PARA DOSIFICADOR FRONTAL) | FERMETURE<br>(POUR BAC A PRODUITS FRONTAL) |
| | 316075 | KEY FOR LOCK GREENWALD<br>(FOR FRONT DISPENSER) | LLAVE PARA CIERRE GREENWALD *<br>(PARA DOSIFICADOR FRONTAL) | CLE POUR FERMETURE GREENWALD<br>(POUR BAC A PRODUITS FRONTAL) |
| 10 | 150185 | BICR.HEX.NUT DIN934-8 M4 | TUER.EX.DIN934-8 B.TRI.M 4 | ECROU HEX.DIN934-8 BICR.M4 |
| 11 | 342337 | GROUND CABLE | CABLE DE TIERRA | PRISE DE TERRE |
| 12 | 322677 | CLOCK CIRCUIT<br>(FOR MACHINES WITH CLOCK TR) | CIRCUITO RELOJ<br>(PARA MODELOS CON RELOJ TR) | CIRCUIT HORLOGE<br>(POUR MACHINES AVEC HOLOGE TR) |
| 13 | 342451 | INSTALLATION PLUG | CONECTORA INSTALACION<br>. | CONNECTEUR INSTALLATION |
| 14 | 10016996 | CC WASHER KEYBOARD<br>(EXCEPT FOR USA AND CANADA) | TECLADO LAVADORA CC<br>(EXCEPTO PARA USA Y CANADA) | CLAVIER LAVEUSE CC<br>(SAUF POUR USA ET CANADA) |
| | 10065449 | CC EXTRA OP. WASHER KEYBOARD<br>(FOR PROFITPLUS CONTROL MOD.)<br>(EXCEPT FOR USA AND CANADA) | TECLADO LAVADORA CC EXTRA OP.<br>(PARA MOD. PROFITPLUS CONTROL)<br>(EXCEPTO PARA USA Y CANADA) | CLAVIER LAVEUSE CC EXTRA OP.<br>(POUR MOD. PROFITPLUS CONTROL)<br>(SAUF POUR USA ET CANADA) |
| | 593509 | COIN CONTROL EXTRA OP. WASHER KEYBOARD<br>(FOR USA AND CANADA ONLY) | TECLADO LAVADORA CC EXTRA OP.<br>(SOLO PARA USA Y CANADA) | CLAVIER LAVEUSE COIN CONTROL EXTRA OP.<br>(SEULEMENT POUR USA ET CANADA) |
| | 428839 | CC-JA WASHER KEYBOARD<br>(JAPENESE) | TECLADO LAVADORA CC-JA<br>(JAPONES) | CLAVIER LAVEUSE CC-JA<br>(JAPONAIS) |
| 15 | 339630 | LOGI CONTROL WASHER KEYBOARD<br>(FOR USA AND CANADA ONLY) | TECLADO LAVADORA LC-IN<br>(SOLO PARA USA Y CANADA) | CLAVIER LAVEUSE LOGI CONTROL<br>(SEULEMENT POUR USA ET CANADA) |
| | 10034817 | LC WASHER KEYBOARD | TECLADO LAVADORA LC | CLAVIER LAVEUSE LC |
| | 343996 | TECLADO LAVADORA LC-JA<br>(JAPENESE) | TECLADO LAVADORA LC-JA<br>(JAPONES) | TECLADO LAVADORA LC-JA<br>(JAPONAIS) |
| 18 | 322164 | CARD READER PLATE<br>(FOR CARD READER)<br>(COIN CTRL MODELS ONLY) | PLACA LECTOR TARJETA<br>(PARA MODELOS CON TARJETERO)<br>(PARA MODELOS A COIN CONTROL) | PLAQUE LECTEUR CARTE<br>(POUR MACH.AVEC LECTEUR CARTE)<br>(POUR MODELE COIN CONTROL) |

info@zipnasklade.ru
8(800)500-69-51

| Nº | REF | DENOMINATION | DENOMINACIÓN | DENOMINATION |
|---|---|---|---|---|
| 19 | 339861 | COIN-METER PLATE FOR TOKEN GIR<br>(FOR SINGLE COIN METER)<br>(FOR MACHINES WITH TOKEN GIR.) | PLACA MONEDERO FG<br>(PARA MONEDERO SIMPLE)<br>(PARA MOD.CON FICHA GIRBAU) | PLAQUE MONNAYEUR A/JETON GIRB.<br>(POUR MONNAYEUR SIMPLE)<br>(POUR MACHINES AVEC JETON GIR) |
| | 340117 | USD COIN-METER PLATE<br>(EH020)<br>(FOR SINGLE COIN METER)<br>(FOR MACHINES CC WITH COIN 25C | PLACA MONEDERO USD<br>(EH020)<br>(PARA MONEDERO SIMPLE)<br>(PARA MOD.CC CON MOND.25C) | PLAQUE MONNAYEUR USD<br>(EH020)<br>(POUR MONNAYEUR SIMPLE)<br>(POUR MACHINES CC AVEC MO.25C) |
| | 339895 | YEN COIN-METER PLATE<br>(FOR SINGLE COIN METER)<br>(FOR MOD.CC WITH COIN M.100 Y) | PLACA MONEDERO YEN<br>(PARA MONEDERO SIMPLE)<br>(PARA MOD.CC CON MON.100 YENS) | PLAQUE MONNAYEUR YEN<br>(POUR MONNAYEUR SIMPLE)<br>(POUR MOD.CC AVEC MON.100 YENS |
| 20 | 339853 | EUR COIN-METER PLATE<br>(FOR DUAL COIN-METER)<br>(FOR MACHINES WITH C-20C/2EUR) | PLACA MONEDERO EUR<br>(PARA MONEDERO DOBLE)<br>(PARA MODELOS CON MON.20C/2EUR | PLAQUE MONNAYEUR EUR<br>(POUR MONNAYEUR DOUBLE)<br>(POUR MACHINES AVEC M.20C/2EUR |
| | 340109 | USD COIN-METER PLATE<br>(EH020)<br>(FOR DUAL COIN-METER)<br>(FOR MACHINES WITH 25C/1$) | PLACA MONEDERO USD<br>(EH020)<br>(PARA MONEDERO DOBLE)<br>(PARA MODELOS CON 25C/1$) | PLAQUE MONNAYEUR USD<br>(EH020)<br>(POUR MONNAYEUR DOUBLE)<br>(POUR MACHINES AVEC 25C/1$) |
| | 339879 | GBP COIN-METER PLATE<br>(FOR DUAL COIN-METER)<br>(FOR MOD. CC WITH 0,5£/1£) | PLACA MONEDERO GBP<br>(PARA MONEDERO DOBLE)<br>(PARA MOD. CC CON 0,5£/1£) | PLAQUE MONNAYEUR GBP<br>(POUR MONNAYEUR DOUBLE)<br>(POUR MOD. CC AVEC 0,5£/1£) |
| | 339887 | NIS COIN-METER PLATE<br>(FOR DUAL COIN-METER)<br>(FOR MOD.CC 1NIS/5NIS) | PLACA MONEDERO NIS<br>(PARA MONEDERO DOBLE)<br>(PARA MOD.CC 1NIS/5NIS) | PLAQUE MONNAYEUR NIS<br>(POUR MONNAYEUR DOUBLE)<br>(POUR MOD.CC 1NIS/5NIS) |
| | 354050 | COINMETER PLATE CC-MD NTD<br>(FOR DUAL COIN-METER)<br>(FOR MOD. CC NTD) | PLACA MONEDERO CC-MD NTD<br>(PARA MONEDERO DOBLE)<br>(PARA MOD. CC NTD) | PLAQUE MONNAYEUR CC-MD NTD<br>(POUR MONNAYEUR DOUBLE)<br>(POUR MOD. CC NTD) |
| 21 | 169169 | COIN BOX UG400A GI<br>(COIN CTRL MODELS ONLY) | CAJA MONEDAS UG400A GI *<br>(PARA MODELOS A COIN CONTROL) | BOITE MONNAIE UG400A GI<br>(POUR MODELE COIN CONTROL) |
| 22 | 322313 | COIN BOX SUPPORT<br>(COIN CTRL MODELS ONLY) | APOYO CAJON MONEDAS<br>(PARA MODELOS A COIN CONTROL)<br>. | APPUI BOITE MONNAIE<br>(POUR MODELE COIN CONTROL) |
| 23 | 323659 | COIN-METER F60.1 0,25/1,00USD | MONEDERO F60.1 0,25/1,00USD | MONNAYEUR F60.1 0,25/1,00USD |
| | 530261 | COIN-METER F60.1 0,25/1 USD THREAD BLOCK<br>(FOR DUAL COIN-METER)<br>(FOR MACHINES WITH 25C/1$) | MONEDERO F60.1 0,25/1 USD THREAD BLOCK<br>(PARA MONEDERO DOBLE)<br>(PARA MODELOS CON 25C/1$) | MONNAYEUR F60.1 0,25/1 USD THREAD BLOCK<br>(POUR MONNAYEUR DOUBLE)<br>(POUR MACHINES AVEC 25C/1$) |
| | 326892 | COIN-METER F60.1 0,25/1,00CAD<br>(FOR DUAL COIN-METER)<br>(FOR 240V) | MONEDERO F60.1 0,25/1,00CAD<br>(PARA MONEDERO DOBLE)<br>(PARA 240V) | MONNAYEUR F60.1 0,25/1,00CAD<br>(POUR MONNAYEUR DOUBLE)<br>(POUR 240V) |
| | 323741 | COIN-METER F60.1 0,20/2,00EUR<br>(FOR DUAL COIN-METER)<br>(FOR MACHINES WITH C-20C/2EUR) | MONEDERO F60.1 0,20/2,00EUR<br>(PARA MONEDERO DOBLE)<br>(PARA MODELOS CON MON.20C/2EUR | MONNAYEUR F60.1 0,20/2,00EUR<br>(POUR MONNAYEUR DOUBLE)<br>(POUR MACHINES AVEC M.20C/2EUR |

info@zipnasklade.ru
8(800)500-69-51

| Nº | REF | DENOMINATION | DENOMINACIÓN | DENOMINATION |
|---|---|---|---|---|
| | 326835 | COIN-METER F60.1 1,00/5,00ILS<br>(FOR DUAL COIN-METER)<br>(FOR MOD.CC 1NIS/5NIS) | MONEDERO F60.1 1,00/5,00ILS *<br>(PARA MONEDERO DOBLE)<br>(PARA MOD.CC 1NIS/5NIS) | MONNAYEUR F60.1 1,00/5,00 ILS<br>(POUR MONNAYEUR DOUBLE)<br>(POUR MOD.CC 1NIS/5NIS) |
| | 326769 | COIN-METER F60.1 0,50/1,00 GBP<br>(FOR DUAL COIN-METER)<br>(FOR MOD. CC WITH 0,5£/1£) | MONEDERO F60.1 0,50/1,00GBP *<br>(PARA MONEDERO DOBLE)<br>(PARA MOD. CC CON 0,5£/1£) | MONNAYEUR F60.1 0,50/1,00 GBP<br>(POUR MONNAYEUR DOUBLE)<br>(POUR MOD. CC AVEC 0,5£/1£) |
| | 354035 | COINMETER F60.1 10/50 NTD<br>(FOR DUAL COIN-METER)<br>(FOR MOD. CC NTD) | MONEDERO F60.1 10/50NTD *<br>(PARA MONEDERO DOBLE)<br>(PARA MOD. CC NTD) | MONNAYEUR F60.1 10/50 NTD<br>(POUR MONNAYEUR DOUBLE)<br>(POUR MOD. CC NTD) |
| 24 | 323642 | COIN-METER F60.11 0,25USD | MONEDERO F60.11 0,25USD | MONNAYEUR F60.11 0,25USD |
| | 530253 | COIN-METER F60.11 0,25USD THREAD BLOCKIN<br>(FOR SINGLE COIN METER)<br>(FOR MACHINES CC WITH COIN 25C | MONEDERO F60.11 0,25USD THREAD BLOCKING<br>(PARA MONEDERO SIMPLE)<br>(PARA MOD.CC CON MOND.25C) | MONNAYEUR F60.11 0,25USD THREAD BLOCKING<br>(POUR MONNAYEUR SIMPLE)<br>(POUR MACHINES CC AVEC MO.25C) |
| | 323733 | COIN-METER F60.11W2000-TOKEN G<br>(FOR SINGLE COIN METER)<br>(FOR MACHINES WITH TOKEN GIR.) | MONEDERO F60.11 FICHA GIRBAU *<br>(PARA MONEDERO SIMPLE)<br>(PARA MOD.CON FICHA GIRBAU) | MONNAYEUR F60.11W2000 JETON GI<br>(POUR MONNAYEUR SIMPLE)<br>(POUR MACHINES AVEC JETON GIR) |
| | 326777 | COIN-METER F60.11 100YEN<br>(FOR SINGLE COIN METER)<br>(FOR MOD.CC WITH COIN M.100 Y) | MONEDERO F60.11 100YEN *<br>(PARA MONEDERO SIMPLE)<br>(PARA MOD.CC CON MON.100 YENS) | MONNAYEUR F60.11 100YEN<br>(POUR MONNAYEUR SIMPLE)<br>(POUR MOD.CC AVEC MON.100 YENS |
| | 344622 | COIN-METER F60.11 10NTD<br>(FOR SINGLE COIN METER)<br>(FOR MOD. CC NTD) | MONEDERO F60.11 10NTD *<br>(PARA MONEDERO SIMPLE)<br>(PARA MOD. CC NTD) | MONNAYEUR F60.11 10NTD<br>(POUR MONNAYEUR SIMPLE)<br>(POUR MOD. CC NTD) |
| | 10098655 | COIN METER F60.11 TOKEN ECO MALAYSIA<br>(FOR SINGLE COIN METER)<br>(FOR MOD. CC WITH COIN ECO MALAYSIA) | MONEDERO F60.11 FICHA ECO MALASIA<br>(PARA MONEDERO SIMPLE)<br>(PARA MOD. CC CON FICHA ECO MALASIA) | MONNAYEUR F60.11 JETON ECO MALASIA<br>(POUR MONNAYEUR SIMPLE)<br>(POUR MOD. CC AVEC MON. ECO MALASIA) |
| 25 | 326124 | OPTOISOLATOR FIXATION KIT | KIT FIJACION OPTOACOPLADOR * | KIT FIXATION OPTOISOLATEUR |
| 26 | 421156 | POWER INPUT BOX | CAJA ENTRADA CORRIENTE | BOITE CONNEXION ALIM. |
| 27 | 421164 | POWER INPUT COVER | TAPA ENTRADA CORRIENTE | COUVERCLE CONNEXION ALIM. |
| 28 | 421016 | CONNECTION BOARD CURRENT INPUT | REGLETA ENTRADA CORRIENTE | REGLETTE ENTRÉE DE COURRANT |
| 29 | 322750 | SCREW FDS SF-M5X12 PKS TORX SPER | TORNILLO FDS SF-M5X12 (ESPECIAL)* | VIS FDS SF-M5X12 PKS TORX SPER |
| 30 | 140418 | CLAMP UNEX REF 1201 | BRIDA UNEX 1201 | BRIDE UNEX REF 1201 |
| 31 | 322701 | RELAY 12VDC | RELE 12VDC* | RELAIS 12VDC |
| 32 | 322719 | EXTERNAL DOSING CIRCUIT<br>(FOR MACHINES WITH EXT.DOSING) | CIRCUITO DOSIFICACION EXTERIOR<br>(PARA MODELOS CON DOSIF.EXTER) | CIRCUIT DOSAGE EXTERNE<br>(POUR MACHINES AVEC DOSAGE EXT |
| 33 | 322727 | CIRCUIT LCBS-4-4-01 BRACKET<br>(FOR MACHINES WITH EXT.DOSING) | SOPORTE CIRCUITO LCBS-4-4-01<br>(PARA MODELOS CON DOSIF.EXTER) | SUPPORT CIRCUIT LCBS-4-4-01<br>(POUR MACHINES AVEC DOSAGE EXT |
| 34 | 321166 | FERRITE SPLIT GRFC-9 | FERRITA SPLIT GRFC-9 | FERRITE SPLIT GRFC-9 |

info@zipnasklade.ru
8(800)500-69-51

| Nº | REF | DENOMINATION | DENOMINACIÓN | DENOMINATION |
|---|---|---|---|---|
| 35 | 140244 | NUT PG-13,5 BRASS<br>(HS-6008)<br>(FOR MACHINES ELECTR.HEATING)<br><br>(FOR 240V)<br>(FOR 1PH 2000W)<br><br>(FOR 200V-208V-220V-230V-240V)<br>(FOR 1PH 4000)<br><br>(FOR 380V-400V-415V)<br>(FOR 3PH 6000W) | TUERCA PG-13,5 LATON<br>(HS-6008)<br>(PARA MODELOS CALEFAC.ELECTR.)<br>.<br>(PARA 240V)<br>(PARA 1PH 2000W)<br>.<br>(PARA 200V-208V-220V-230V-240V)<br>(PARA 1PH 4000W)<br>.<br>(PARA 380V-400V-415V)<br>(PARA 3PH 6000W) | ECROU PRESSE-ETOUPE PG-13,5 LAITON<br>(HS-6008)<br>(POUR MACHINES CHAUF.ELECTR.)<br><br>(POUR 240V)<br>(POUR 1PH 2000W)<br><br>(POUR 200V-208V-220V-230V-240V)<br>(POUR 1PH 4000W)<br><br>(POUR 380V-400V-415V)<br>(POUR 3PH 6000W) |
| 36 | 140111 | STUFFING-BOX EXADIN PG13,5 BRASS<br>(HS-6008)<br>(FOR MACHINES ELECTR.HEATING)<br><br>(FOR 240V)<br>(FOR 1PH 2000W)<br><br>(FOR 200V-208V-220V-230V-240V)<br>(FOR 1PH 4000)<br>(FOR 380V-400V-415V)<br>(FOR 3PH 6000W) | PRENSAESTOPAS EXADIN PG13,5 LATON<br>(HS-6008)<br>(PARA MODELOS CALEFAC.ELECTR.)<br>.<br>(PARA 240V)<br>(PARA 1PH 2000W)<br>.<br>(PARA 200V-208V-220V-230V-240V)<br>(PARA 1PH 4000W)<br>(PARA 380V-400V-415V)<br>(PARA 3PH 6000W) | PRESSE-ETOUPE EXADIN PG13,5 LAITON<br>(HS-6008)<br>(POUR MACHINES CHAUF.ELECTR.)<br><br>(POUR 240V)<br>(POUR 1PH 2000W)<br><br>(POUR 200V-208V-220V-230V-240V)<br>(POUR 1PH 4000W)<br>(POUR 380V-400V-415V)<br>(POUR 3PH 6000W) |
| 37 | 129692 | SELF-LOCKING NUT DIN985-8 B.TRI.M 3 | TUER.AUTOBL.DIN985-8 B.TRI.M 3 | ECROU AUTOBLOCANT DIN985-8 B.TRI.M 3 |
| 38 | 149484 | WASHER DIN 125B M3 ST TRIVALENT | ARANDELA DIN 125B M3 ST TRIVALENTE | RONDELLE DIN 125B M3 ST TRIVALENT |
| 39 | 132043 | SELF-LOCKING NUT DIN985-8 B.TRI.M 4 | TUER.AUTOBL.DIN985-8 B.TRI.M 4 | ECROU AUTOBLOCANT DIN985-8 B.TRI.M 4 |
| 40 | 149476 | BICR.WASHER B DIN125-ST 4,3 | ARAN.B DIN125-ST B.TRI. 4,3 | RONDELLE B DIN125-ST BICR.4,3 |
| 41 | 322784 | PRESSURE TRANSMITTER 400.95100 | TRANSM.PRESION HUBA 400.95100 | PRESSOSTAT HUBA 400.95100 |
| 42 | 342204 | SET 200...240V<br>(FOR MACHINES ELECTR.HEATING)<br>(FOR 3PH 6000W)<br>(FOR 200V-208V-220V-230V-240V) | COMPLEMENTO 200...240V<br>(PARA MODELOS CALEFAC.ELECTR.)<br>(PARA 3PH 6000W)<br>(PARA 200V-208V-220V-230V-240V) | ENSEMBLE 200...240V<br>(POUR MACHINES CHAUF.ELECTR.)<br>(POUR 3PH 6000W)<br>(POUR 200V-208V-220V-230V-240V) |
| 43 | 342238 | POWER BRIDGE WIRE<br>(FOR MACHINES ELECTR.HEATING) | CABLE PUENTE ALIMENTACION<br>(PARA MODELOS CALEFAC.ELECTR.) | CABLE PONT ALIMENTATION<br>(POUR MACHINES CHAUF.ELECTR.) |
| 44 | 342212 | HEATING SET 6000W<br>(FOR MACHINES ELECTR.HEATING) | COMPLEMENTO CALEF. 6000W<br>(PARA MODELOS CALEFAC.ELECTR.) | ENSEMBLE CHAUF. 6000W<br>(POUR MACHINES CHAUF.ELECTR.) |
| 45 | 263434 | WASHER 32X21X0,8<br>(HS-6008)<br>(FOR MACHINES ELECTR.HEATING)<br><br>(FOR 240V)<br>(FOR 1PH 2000W)<br><br>(FOR 200V-208V-220V-230V-240V)<br>(FOR 1PH 4000) | ARANDELA 32X21X0.8 INOX<br>(HS-6008)<br>(PARA MODELOS CALEFAC.ELECTR.)<br>.<br>(PARA 240V)<br>(PARA 1PH 2000W)<br>.<br>(PARA 200V-208V-220V-230V-240V)<br>(PARA 1PH 4000W)<br>. | RONDELLE 32X21X0,8<br>(HS-6008)<br>(POUR MACHINES CHAUF.ELECTR.)<br><br>(POUR 240V)<br>(POUR 1PH 2000W)<br><br>(POUR 200V-208V-220V-230V-240V)<br>(POUR 1PH 4000W) |

info@zipnasklade.ru
8(800)500-69-51

| Nº | REF | DENOMINATION | DENOMINACIÓN | DENOMINATION |
|---|---|---|---|---|
| | | (FOR 380V-400V-415V)<br>(FOR 3PH 6000W) | (PARA 380V-400V-415V)<br>(PARA 3PH 6000W) | (POUR 380V-400V-415V)<br>(POUR 3PH 6000W) |
| 46 | 551937 | PROCESSOR BOARD FIXATION BOLT ASSEMBLY<br>(FOR TOP DISPENSER) | CONJUNTO TURRION FIJACION PLACA MICRO<br>(PARA DOSIFICADOR SUPERIOR) | ENSEMBLE BULON FIXATION PLAQUE MICROP.<br>(POUR BAC A PRODUITS SUPERIEUR |
| 48 | 341388 | PROCESSOR BOARD FIXATION PLATE<br>(FOR TOP DISPENSER) | CHAPA FIJACION PLACA MICRO<br>(PARA DOSIFICADOR SUPERIOR) | PLAQUE FIXATION MICROPROCES.<br>(POUR BAC A PRODUITS SUPERIEUR |
| 49 | 521393 | HARNESS | CABLEADO ELECTRICO | CABLAGE |
| 50 | 327056 | WIRES PROTECTION SHR-20-PPB | FUNDA CABLES SHR-20-PPB | PROTECTION CABLES SHR-20-PPB |
| 51 | 352237 | WASHER STL-750-16-01 | ABRAZADERA STL-750-16-01 | RONDELLE STL-750-16-01 |
| 52 | 322453 | COIN-METER 2 PLUG<br>(FOR DUAL COIN-METER) | CONECTORA 2 MONEDERO<br>(PARA MONEDERO DOBLE) | CONNECTEUR 2 MONNAYEURS<br>(POUR MONNAYEUR DOUBLE) |
| | 322461 | COIN-METER 1 PLUG<br>(FOR SINGLE COIN METER) | CONECTORA 1 MONEDERO<br>(PARA MONEDERO SIMPLE) | CONNECTEUR 1 MONNAYEUR<br>(POUR MONNAYEUR SIMPLE) |
| 53 | 342246 | DUOBLE HEATING HARNESS<br>(FOR MACHINES ELECTR.HEATING) | INST. ELEC. CALEFACCION DOBLE<br>(PARA MODELOS CALEFAC.ELECTR.) | CABLAGE CHAUFFAGE DOUBLE<br>(POUR MACHINES CHAUF.ELECTR.) |
| 54 | 411678 | COIN-METER PLUG<br>(FOR BLIND COVER MACHINES) | CONECTORA MONEDERO<br>(PARA MODELOS CON TAPA CIEGA) | CONNECTEUR MONNAYEUR<br>(POUR MACHINES AVEC COUVERCLE AVEUGLE) |
| 55 | 411736 | PLATE<br>(FOR BLIND COVER MACHINES)<br>(COIN CTRL MODELS ONLY) | PLACA CIEGA<br>(PARA MODELOS CON TAPA CIEGA)<br>(PARA MODELOS A COIN CONTROL) | PLAQUE<br>(POUR MACHINES AVEC COUVERCLE AVEUGLE)<br>(POUR MODELE COIN CONTROL) |
| 56 | 140236 | COUNTERNUT PG-11 BRASS<br>(EH020 120V USA/CAN)<br><br>(HS-6008)<br>(FOR MACHINES HEATING WITHOUT)<br>(FOR 120/200/208/220/230/240V)<br>(FOR SINGLE-PHASE) | TUERCA PG11 LATON<br>(EH020 120V USA/CAN)<br>.<br>(HS-6008)<br>(PARA MODELOS SIN CALEFACCION)<br>(PARA 120/200/208/220/230/240V)<br>(PARA MONOFASICO) | CONTREECROU PG-11 LAITON<br>(EH020 120V USA/CAN)<br><br>(HS-6008)<br>(POUR MACHINES SENS CHAUFAGE)<br>(POUR 120/200/208/220/230/240V<br>(POUR MONOPHASE) |
| 57 | 412312 | WASHER 31X18,5X0,8<br>(EH020 120V USA/CAN)<br>(HS-6008)<br>(FOR MACHINES HEATING WITHOUT)<br>(FOR 120/200/208/220/230/240V)<br>(FOR SINGLE-PHASE) | ARANDELA 31X18.5X0.8 INOX<br>(EH020 120V USA/CAN)<br>(HS-6008)<br>(PARA MODELOS SIN CALEFACCION)<br>(PARA 120/200/208/220/230/240V)<br>(PARA MONOFASICO) | RONDELLE 31X18,5X0,8<br>(EH020 120V USA/CAN)<br>(HS-6008)<br>(POUR MACHINES SENS CHAUFAGE)<br>(POUR 120/200/208/220/230/240V<br>(POUR MONOPHASE) |
| 58 | 140103 | STUFFING-BOX EXADIN PG11 BRASS<br>(EH020 120V USA/CAN)<br><br>(HS-6008)<br>(FOR MACHINES HEATING WITHOUT)<br>(FOR 120/200/208/220/230/240V)<br>(FOR SINGLE-PHASE) | PRENSAESTOPAS EXADIN PG11 LATON<br>(EH020 120V USA/CAN)<br>.<br>(HS-6008)<br>(PARA MODELOS SIN CALEFACCION)<br>(PARA 120/200/208/220/230/240V)<br>(PARA MONOFASICO) | PRESSE-ETOUPES EXADIN PG11 LAITON<br>(EH020 120V USA/CAN)<br><br>(HS-6008)<br>(POUR MACHINES SENS CHAUFAGE)<br>(POUR 120/200/208/220/230/240V<br>(POUR MONOPHASE) |
| 59 | 327668 | ELECTRIC CORD SJT 1,6M<br>(EH020 120V USA/CAN) | CORDON ELECTRICO SJT 1,6M. *<br>(EH020 120V USA/CAN) | CORDON ELECTRIQUE SJT 1,6M<br>(EH020 120V USA/CAN) |

info@zipnasklad.ru
8(800)500-69-51

| Nº | REF | DENOMINATION | DENOMINACIÓN | DENOMINATION |
|---|---|---|---|---|
| 60 | 326843 | MICROPROCESSOR PLATE COVER | TAPA PLACA MICROPROCESADOR | COUVERCLE PLAQUE MICROPROSSEUR |
| 61 | 327908 | PUSH-BUTTON PLATE<br>(FOR MOD. CC-CP) | PLACA PULSADOR<br>(PARA MOD. CC-CP) | PLAQUE PULSATEUR<br>(POUR MOD. CC-CP) |
| 62 | 138339 | PUSH-BUTTON C6061AL<br>(FOR MOD. CC-CP) | PULSADOR C6061AL *<br>(PARA MOD. CC-CP) | BOUTON-POUSSOIR C6061AL<br>(POUR MOD. CC-CP) |
| | 587519 | SWITCH C1550AL<br>(LOGI CTRL MODELS ONLY)<br>(LOGI PRO MODELS ONLY) | INTERRUPTOR C1550AL<br>(PARA MODELOS A LOGI CONTROL)<br>(PARA MODELOS A LOGI PRO) | INTERRUPTEUR C1550AL<br>(POUR MODELE LOGI CONTROL)<br>(POUR MODELE LOGI PRO) |
| 63 | 340158 | START-STOP PLATE<br>(FOR MOD. CC-CP) | PLACA MARCHA-PARO CP<br>(PARA MOD. CC-CP) | PLAQUE MARCHE-ARRET<br>(POUR MOD. CC-CP) |
| 64 | 420778 | VENDING ADAPTER PLUG<br>(FOR MOD. CC-TC) | CONECTORA ADAPTADOR VENDING<br>(PARA MOD. CC-TC) | CONNECTEUR ADAPTEUR VENDING<br>(POUR MOD. CC-TC) |
| 65 | 140434 | CLAMP 2221<br>(FOR MOD. CC-TC) | BRIDA UNEX 2221 *<br>(PARA MOD. CC-TC) | BRIDE 2221<br>(POUR MOD. CC-TC) |
| 66 | 621086 | SAFETY INSTR.LABEL EN<br>(FOR USA AND CANADA ONLY) | ETIQUETA INSTR. SEGURIDAD EN<br>(SOLO PARA USA Y CANADA) | ETIQUETTE INSTR.SECURITE EN<br>(SEULEMENT POUR USA ET CANADA) |
| | 621219 | START-STOP LABEL<br>(LOGI CTRL MODELS ONLY)<br>(LOGI PRO MODELS ONLY) | ETIQUETA MARCHA-PARO<br>(PARA MODELOS A LOGI CONTROL)<br>(PARA MODELOS A LOGI PRO) | ETIQUETTE MARCHE-ARRET<br>(POUR MODELE LOGI CONTROL)<br>(POUR MODELE LOGI PRO) |
| 68 | 140251 | COUNTERNUT PG16 BRASS<br>(HS-6008)<br>(FOR MACHINES ELECTR.HEATING)<br>.<br>(FOR 200V-208V-220V-230V-240V)<br>(FOR 1PH 6000W)<br>.<br>(FOR 200V-208V-220V-230V-240V)<br>(FOR 3PH 6000W) | TUERCA PG16 LATON<br>(HS-6008)<br>(PARA MODELOS CALEFAC.ELECTR.)<br>.<br>(PARA 200V-208V-220V-230V-240V)<br>(PARA 1PH 6000W)<br>.<br>(PARA 200V-208V-220V-230V-240V)<br>(PARA 3PH 6000W) | CONTREECROU PG16 LAITON<br>(HS-6008)<br>(POUR MACHINES CHAUF.ELECTR.)<br>.<br>(POUR 200V-208V-220V-230V-240V)<br>(POUR 1PH 6000W)<br>.<br>(POUR 200V-208V-220V-230V-240V)<br>(POUR 3PH 6000W) |
| 69 | 140129 | STUFFING-BOX EXADIN PG16 BRASS<br>(HS-6008)<br>(FOR MACHINES ELECTR.HEATING)<br>.<br>(FOR 200V-208V-220V-230V-240V)<br>(FOR 1PH 6000W)<br>(FOR 200V-208V-220V-230V-240V)<br>(FOR 3PH 6000W) | PRENSAESTOPAS EXADIN PG16 LATON<br>(HS-6008)<br>(PARA MODELOS CALEFAC.ELECTR.)<br>.<br>(PARA 200V-208V-220V-230V-240V)<br>(PARA 1PH 6000W)<br>(PARA 200V-208V-220V-230V-240V)<br>(PARA 3PH 6000W) | PRESSE-ETOUPES EXADIN PG16 LAITON<br>(HS-6008)<br>(POUR MACHINES CHAUF.ELECTR.)<br>.<br>(POUR 200V-208V-220V-230V-240V)<br>(POUR 1PH 6000W)<br>(POUR 200V-208V-220V-230V-240V)<br>(POUR 3PH 6000W) |
| 70 | 430223 | EXTERNAL DOSING WIRE<br>(EH020) | CABLE DOSIFICACION EXT.<br>(EH020) | CABLE DOSAGE EXTERNE<br>(EH020) |
| 71 | 327353 | COIN-METER EMP 500 EUROS<br>(FOR PROGRAMMABLE COIN.METER)<br>(FOR MODELS WITH EUR) | MONEDERO EMP 500 EUROS<br>(PARA MONEDERO PROGRAMABLE)<br>(PARA MODELOS CON EUR) | MANNAYEUR EMP 500 EUROS<br>(POUR MONNAYEUR PROGRAMMABLE)<br>(POUR MODELES AVEC EUR) |
| | 411223 | COIN-METER EMP 500 NOT EUROS<br>(FOR PROGRAMMABLE COIN.METER) | MONEDERO EMP 500 NO EUROS<br>(PARA MONEDERO PROGRAMABLE) | MONNAYEUR EMP 500 NO EUROS<br>(POUR MONNAYEUR PROGRAMMABLE) |

info@zipnasklad.ru
8(800)500-69-51

| Nº | REF | DENOMINATION | DENOMINACIÓN | DENOMINATION |
|---|---|---|---|---|
| | | (FOR MODELS WIHTOUT EUR) | (PARA MODELOS SIN EUR) | (POUR MODELES SANS EUR) |
| 72 | 340125 | COIN-METER PLATE<br>(FOR SINGLE COIN METER)<br>(FOR PROGRAMMABLE COIN.METER) | PLACA MONEDERO UNIVERSAL<br>(PARA MONEDERO SIMPLE)<br>(PARA MONEDERO PROGRAMABLE) | PLAQUE MONNAYEUR<br>(POUR MONNAYEUR SIMPLE)<br>(POUR MONNAYEUR PROGRAMMABLE) |
| 73 | 341586 | FUSE COVER | CUBRE FUSIBLE * | COUVRE FUSIBLE |
| 74 | 332601 | SHEATH-LODGING DGB-7 | PASAMUROS DGB-7 | LOGEMENT DGB-7 |
| 75 | 10034882 | LP WASHER KEYBOARD<br>(LOGI PRO MODELS ONLY)<br>(HS-6008) | TECLADO LAVADORA LP<br>(PARA MODELOS A LOGI PRO)<br>(HS-6008) | CLAVIER LAVEUSE LP<br>(POUR MODELE LOGI PRO)<br>(HS-6008) |
| | 550517 | WASHER KEYBOARD LP (BILINGUAL USA)<br>(LOGI PRO MODELS ONLY)<br>(EH020) | TECLADO LAVADORA LP (USA BILINGÜE)<br>(PARA MODELOS A LOGI PRO)<br>(EH020) | CLAVIER LAVEUSE LP (BILINGUE USA)<br>(POUR MODELE LOGI PRO)<br>(EH020) |
| 76 | 521815 | PROCESSOR BOARD H6008/M610 LP<br>(LOGI PRO MODELS ONLY) | PLACA MICROP.H6008/M610 LP<br>(PARA MODELOS A LOGI PRO) | PLAQUE MICROP.H6008/M610 LP<br>(POUR MODELE LOGI PRO) |
| | | WITHOUT ILLUSTRATION | SIN ILUSTRACION | SANS ILLUSTRATION |
| | 796839 | VENDING VN SERIE 6 SET | KIT VENDING VN SERIE 6 | KIT VENDING VN SERIE 6 |
| | | WITHOUT ILLUSTRATION | SIN ILUSTRACION | SANS ILLUSTRATION |
| | 614495 | KIT PROFIT PLUS HS-6008/MS-610<br>(FOR MOD. HS-6008, MS-610 AND RMS610)<br>(EXCEPT FOR USA AND CANADA) | KIT PROFIT PLUS HS-6008/MS-610<br>(PARA MOD. HS-6008, MS-610 Y RMS610)<br>(EXCEPTO PARA USA Y CANADA) | KIT PROFIT PLUS HS-6008/MS-610<br>(POUR MOD. HS-6008, MS-610 ET RMS610)<br>(SAUF POUR USA ET CANADA) |
| | 565895 | COMMUNICATION BOARD COM-C * | PLACA COMUNICACIONES COM-C * | PLAQUE COMMUNICATIONS COM-C/609164 |

info@zipnasklade.ru
8(800)500-69-51

# HS-6008/EH020 6

## DOSIFICADOR FRONTAL

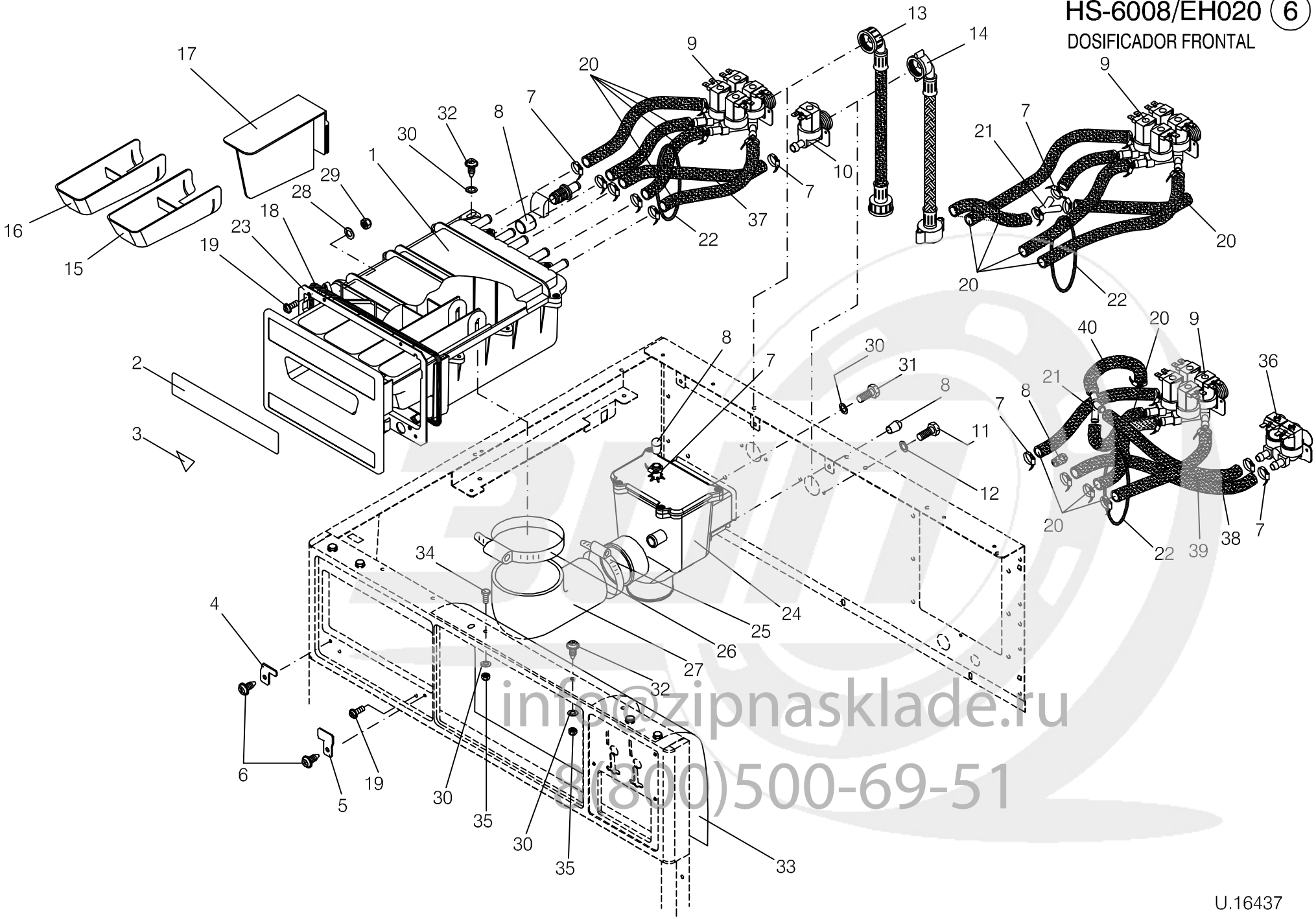


info@zipnasklade.ru
8(800)500-69-51

U.16437

| Nº | REF | DENOMINATION | DENOMINACIÓN | DENOMINATION |
|---|---|---|---|---|
| | | FRONT SOAP DISPENSER | DOSIFICADOR FRONTAL<br>. | BAC A PRODUITS FRONTAL |
| 1 | 339135 | SOAP DISPENSER SET | CONJUNTO DOSIFICADOR | ENSEMBLE BAC A PRODUITS |
| | 339101 | ASPIRATION HOSE | TUBO ASPIRACION | TUBE ASPIRATION |
| | 333054 | ANTISPLASH | ANTISALPICADERO | ANTIECLABOUSSEMENT |
| | 339184 | PRODUCT DISTRIBUTOR | DISTRIBUIDOR PRODUCTOS | DISTRIBUTEUR DE PRODUITS |
| | 327825 | WATER INLET RACCORD | RACOR ENTRADA AGUA | RACCORD ENTREE EAU |
| 2 | 10560993 | SOAP DISPENSER LABEL | ETIQUETA DOSIFICADOR | ÉTIQUETTE BAC A PRODUITS |
| | 339812 | SOAP DISPENSER PLATE IN | PLACA DOSIFICADOR IN. | PLAQUE BAC A PRODUITS IN |
| | 340091 | SOAP DISPENSER PLATE USA/CAN<br>(EH020 COIN CONTROL) | PLACA DOSIFICADOR USA/CAN<br>(EH020 COIN CONTROL) | PLAQUE BAC A PRODUITS USA/CAN<br>(EH020 COIN CONTROL) |
| 3 | 10588960 | SPLASH HAZARD LABEL | ETIQUETA PELIGRO SALPICADURAS | ÉTIQUETTE RISQUE DE PROJECTIONS |
| 4 | 321828 | SOAP DISPENSER PIECE | TOPE DOSIFICADOR | ARRÊT BAC A PRODUITS |
| 5 | 326595 | SOAP DISPENSER PIECE | TOPE DOSIFICADOR | ARRÊT BAC A PRODUITS |
| 6 | 320911 | SCREW FTX512FT85T INOX A2 M5X12 | TOR.FTX512FT85T INOX A2 M5X12 (ESPECIAL) | VIS FTX512FT85T INOX A2 M5X12 |
| 7 | 155150 | HOSE CLIP ASFA-L W2 8-16 | ABRAZADERA ASFA-L W2 8-16 | COLLIER ASFA-L W2 8-16 |
| 8 | 156679 | CONICAL END-PIECE R-16 D10 | TOPE CONICO REPRIMSA R-16 D10 | BOUCHON CONIQUE R-16 D10 |
| 9 | 323311 | 4 TRACK ELECTROVALVE 389 180ºC<br>(LOGI CTRL MODELS ONLY)<br>(LOGI PRO MODELS ONLY) | ELECTROV.CUADRUPLE 389 180º *<br>(PARA MODELOS A LOGI CONTROL)<br>(PARA MODELOS A LOGI PRO) | ELECTROVANNE 4 VOIES 389 180ºC<br>(POUR MODELE LOGI CONTROL)<br>(POUR MODELE LOGI PRO) |
| | 332296 | COIL 255043000000 12VCC | BOBINA 255043000000 12VCC | BOBINE 255043000000 12VCC |
| | 300194 | YELLOW CASE 30053 | ESTUCHE AMARILLO 30053 | BOITE JAUNE 30053 |
| | 300202 | INTEGRAL GUIDE-MEMBRANE 30696 | MEMBRANA-GUIA INTEGRAL 30696 * | MEMBRANE-GUIDE INTEGRALE 30696 |
| | 344234 | 4 TRACK ELECTROVALVE<br>(EH020 COIN CONTROL) | ELECTROVALVULA CUATRO VIAS<br>(EH020 COIN CONTROL) | ELECTROVANNE 4 VOIES<br>(EH020 COIN CONTROL) |
| | 332296 | COIL 255043000000 12VCC | BOBINA 255043000000 12VCC | BOBINE 255043000000 12VCC |
| | 300194 | YELLOW CASE 30053 | ESTUCHE AMARILLO 30053 | BOITE JAUNE 30053 |
| | 300202 | INTEGRAL GUIDE-MEMBRANE 30696 | MEMBRANA-GUIA INTEGRAL 30696 * | MEMBRANE-GUIDE INTEGRALE 30696 |
| 10 | 323329 | SIMPLE ELECTROVALVE 329 180 | ELECTROV.SIMPLE 329 180 | ELECTROVANNE SIMPLE 329 180 |
| | 332296 | COIL 255043000000 12VCC | BOBINA 255043000000 12VCC | BOBINE 255043000000 12VCC |
| | 300194 | YELLOW CASE 30053 | ESTUCHE AMARILLO 30053 | BOITE JAUNE 30053 |

info@zipnasklade.ru
8(800)500-69-51

| Nº | REF | DENOMINATION | DENOMINACIÓN | DENOMINATION |
|---|---|---|---|---|
| | 300202 | INTEGRAL GUIDE-MEMBRANE 30696 | MEMBRANA-GUIA INTEGRAL 30696 * | MEMBRANE-GUIDE INTEGRALE 30696 |
| 11 | 146258 | BIC.HEX SCREW DIN933-4.8 M4X10 | TOR.EX.DIN933-4.8 B.TRI.M 4X10 | VIS HEX DIN933-4.8 BICR.M 4X10 |
| 12 | 149476 | BICR.WASHER B DIN125-ST 4,3 | ARAN.B DIN125-ST B.TRI. 4,3 | RONDELLE B DIN125-ST BICR.4,3 |
| 13 | 323477 | WATER INLET AF DI10MM L1,5M | TUBO ENTRADA AF DI10MM L1,5M * | FLEXIBLE ENTRÉE AFDI10MM L1,5M |
| 14 | 323493 | WATER INLET AC DI10MM L1,5M | TUBO ENTRADA AC DI10MM L1,5M * | FLEXIBLE ENTRÉE ACDI10MM L1,5M |
| 15 | 327262 | WASH SOAP DISPENSER<br>(EH020 LOGI CONTROL)<br>(EH020 LOGI PRO) | DOSIFICADOR LAVADO<br>(EH020 LOGI CONTROL)<br>(EH020 LOGI PRO) | BAC A PRODUITS LAVAGE<br>(EH020 LOGI CONTROL)<br>(EH020 LOGI PRO) |
| 16 | 327635 | PREWASH SOAP DISPENSER<br>(EH020) | DOSIFICADOR PRELAVADO<br>(EH020) | BAC A PRODUITS PRELAVAGE<br>(EH020) |
| 17 | 332379 | WASH LEAD<br>(EH020 COIN CONTROL) | TAPA LAVADO<br>(EH020 COIN CONTROL) | COUVERCLE LAVAGE<br>(EH020 COIN CONTROL) |
| 18 | 341040 | FRONT SOAP DISPENSER GASKET | JUNTA DOSIFICADOR FRONTAL | JOINT BAC A PRODUITS FRONTAL |
| 19 | 328062 | SCREW 416RFX87T INOXA2 4X16 | TORNILLO 416RFX87T INOXA2 4X16(ESPECIAL) | VIS 416RFX87T INOXA2 4X16 |
| 20 | 323469 | 1 METER HOSE PARIGI D10XD16 | 1 METRO TUBO PARIGI D10XD16 | 1 METRE TUBE PARIGI D10XD16 |
| 21 | 152165 | BRANCH<br>(EH020 COIN CONTROL) | BIFURCACION<br>(EH020 COIN CONTROL) | BIFURCATION<br>(EH020 COIN CONTROL) |
| 22 | 193995 | TORIC GASKET 65X71X3 | JUNTA TORICA 65X71X3 | JOINT TORIQUE 65X71X3 |
| 23 | 340976 | GASKET SOAP DISPENSER FRAME | MARCO JUNTA DOSIFICADOR | CADRE JOINT BAC A PRODUITS |
| 24 | 339341 | DISTRIBUTOR SET | CONJUNTO DISTRIBUIDOR | ENSEMBLE DISTRIBUTEUR |
| 25 | 132290 | CLAMP 301730-8 D50-70 | ABRAZADERA 301730-8 D50- 70 | BRIDE 301730-8 D50-70 |
| 26 | 132340 | CLAMP REF.30173380-2 D80-100 | ABRAZADERA REF.30173380-2 D80-100 | BRIDE REF.30173380-2 D80-100 |
| 27 | 333534 | RUBBER ELBOW 379X67 | CODO GOMA 379X67 | COUDE GOMME 379X67 |
| 28 | 149484 | WASHER DIN 125B M3 ST TRIVALENT | ARANDELA DIN 125B M3 ST TRIVALENTE | RONDELLE DIN 125B M3 ST TRIVALENT |
| 29 | 129692 | SELF-LOCKING NUT DIN985-8 B.TRI.M 3 | TUER.AUTOBL.DIN985-8 B.TRI.M 3 | ECROU AUTOBLOCANT DIN985-8 B.TRI.M 3 |
| 30 | 149534 | BICR.WASHER B DIN125-ST 5,3 | ARAN.B DIN125-ST BICR. 5,3 | RONDELLE B BICR.DIN125-ST 5,3 |
| 31 | 146274 | BICR.HEX SCREW DIN933-8 M-5X10 | TOR.EX.DIN933-8.8 B.TRI.M 5X10 | VIS HEX.BICR.DIN933-8.8 M-5X10 |
| 32 | 322750 | SCREW FDS SF-M5X12 PKS TORX SPER | TORNILLO FDS SF-M5X12 (ESPECIAL)* | VIS FDS SF-M5X12 PKS TORX SPER |
| 33 | 430959 | MICROPROCESSOR PLATE COVER<br>(COIN CTRL MODELS ONLY) | TAPA PLACA MICROPROCESADOR<br>(PARA MODELOS A COIN CONTROL) | COUVERCLE PLAQUE MICROPROCES.<br>(POUR MODELE COIN CONTROL) |

info@zipnasklade.ru
8(800)500-69-51

| Nº | REF | DENOMINATION | DENOMINACIÓN | DENOMINATION |
|---|---|---|---|---|
| | 430967 | MICROPROCESSOR PLATE COVER<br>(LOGI CTRL MODELS ONLY)<br>(LOGI PRO MODELS ONLY) | TAPA PLACA MICROPROCESADOR<br>(PARA MODELOS A LOGI CONTROL)<br>(PARA MODELOS A LOGI PRO) | COUVERCLE PLAQUE MICROPROCES.<br>(POUR MODELE LOGI CONTROL)<br>(POUR MODELE LOGI PRO) |
| 34 | 327064 | HEX SCREW DIN 933 8,8 M5x12 TRIVALENT | TORNILLO HEXAGONAL DIN 933 8,8 M5x12 TRI | VIS HEXAGONALE DIN 933 8,8 M5x12 TRIVALE |
| 35 | 176826 | SELF-LOCKING NUT DIN985-8 B.TRI.M5 | TUER.AUTOBL.DIN985-8 B.TRI.M5 | ECROU AUTOBLOCANT DIN 985-8 B.TRI.M5 |
| 36 | 427112 | DOUBLE ELECTROV. 349 180º 12VCC*<br>(LOGI PRO MODELS ONLY) | ELECTROV.DOBLE 349 180º 12VCC*<br>(PARA MODELOS A LOGI PRO) | ELECTROV.DOUBLE 349 180º 12VCC*<br>(POUR MODELE LOGI PRO) |
| 37 | 10938223 | WATER INLET HOSE | TUBO ENTRADA AGUA | TUBE ENTREE EAU |
| 38 | 10938355 | WATER INLET HOSE | TUBO ENTRADA AGUA | TUBE ENTREE EAU |
| 39 | 10938389 | WATER INLET HOSE | TUBO ENTRADA AGUA | TUBE ENTREE EAU |
| 40 | 10938397 | WATER INLET HOSE | TUBO ENTRADA AGUA | TUBE ENTREE EAU |
| | | WITHOUT ILLUSTRATION | .<br>SIN ILUSTRACION | SANS ILLUSTRATION |
| | 798009 | EXT.DOSING KIT HS-6008 MS-610 | KIT DOSIF.EXT.HS-6008 MS-610 | KIT DOSAGE EXT.HS-6008 MS-610 |
| | 796870 | SIPHON CLEANING KIT | KIT LIMPIEZA SIFONES | KIT NETTOYAGE SIPHON |

info@zipnasklade.ru
8(800)500-69-51

# HS-6008/EH020 7

## DOSIFICADOR SUPERIOR

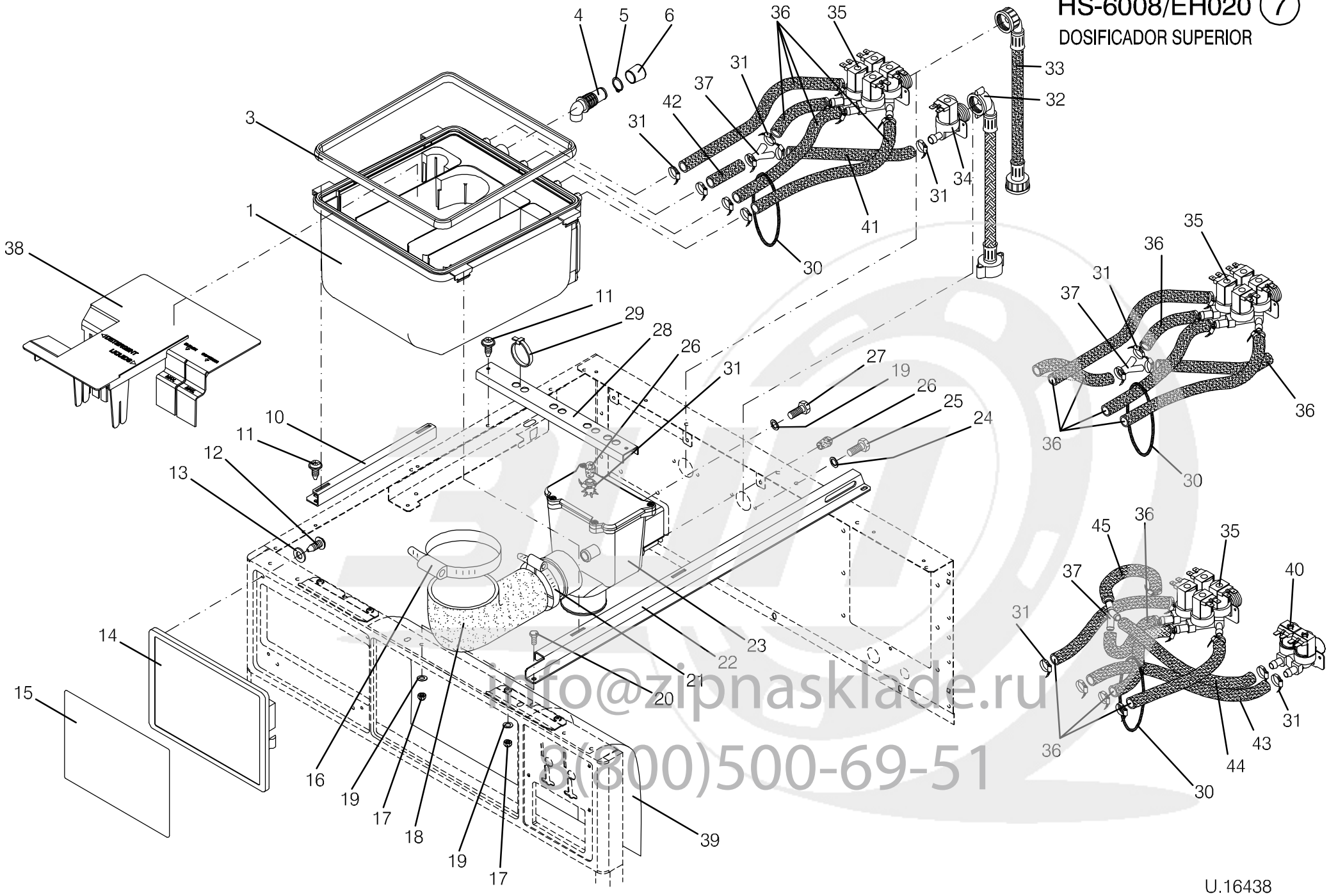


info@zipnasklade.ru
8(800)500-69-51

| Nº | REF | DENOMINATION | DENOMINACIÓN | DENOMINATION |
|---|---|---|---|---|
| | | UPPER SOAP DISPENSER | DOSIFICADOR SUPERIOR<br>. | BAC A PRODUITS |
| 1 | 511584 | SOAP DISPENSER SET | CONJUNTO DOSIFICADOR | ENSEMBLE BAC A PRODUITS |
| | 339598 | ASPIRATION HOSE | TUBO ASPIRACION | TUBE ASPIRATION |
| 3 | 321430 | SOAP DISPENSER GASKET | JUNTA DOSIFICADOR | JOINT BACS A PRODUITS |
| 4 | 321349 | WATER INLET RACCORD | RACOR ENTRADA AGUA DIRECTA | RACCORD ENTREE EAU |
| 5 | 131508 | FLEXIBLE RING E-17 DIN 471 | ANILLO ELASTICO E-17 DIN 471 | BAGUE ELASTIQUE E-17 DIN 471 |
| 6 | 156687 | CONICAL END-PIECE R-16 D16 | TOPE CONICO REPRIMSA R-16 D16 | ARRET CONIQUE R-16 D16 |
| 10 | 350702 | UPPER SOAP DISPENSER BRACKET | SOPORTE DOSIFICADOR SUPERI | SUPPORT BAC PRODUITS SUPERIEUR |
| 11 | 322750 | SCREW FDS SF-M5X12 PKS TORX SPER | TORNILLO FDS SF-M5X12 (ESPECIAL)* | VIS FDS SF-M5X12 PKS TORX SPER |
| 12 | 339374 | SCREW RF81T 4X8 | TORNILLO RF81T 4X8 (ESPECIAL) | VIS RF81T 4X8 |
| 13 | 287920 | WASHER 14X4,5X2 | ARANDELA 14X4.5X2 TRIVALEN. | RONDELLE 14X4,5X2 |
| 14 | 339150 | CONTROL PANEL PLATE | CARATULA PANEL DE MANDOS | PLAQUE TABLEAU DE COMMANDES |
| 15 | 10699155 | LABEL<br>(FOR TOP DISPENSER) | ETIQUETA<br>(PARA DOSIFICADOR SUPERIOR) | ÉTIQUETTE<br>(POUR BAC A PRODUITS SUPERIEUR |
| | 344002 | ETIQUETA INSTR. FUNCION. JA<br>(LOGI CTRL MODELS ONLY)<br>(FOR TOP DISPENSER) | ETIQUETA INSTR. FUNCION. JA<br>(PARA MODELOS A LOGI CONTROL)<br>(PARA DOSIFICADOR SUPERIOR) | ETIQUETA INSTR. FUNCION. JA<br>(POUR MODELE LOGI CONTROL)<br>(POUR BAC A PRODUITS SUPERIEUR |
| | 340364 | SAFETY INSTR.PLATE JA<br>(COIN CTRL MODELS ONLY)<br>(FOR TOP DISPENSER) | PLACA INSTR. SEGURIDAD JA.<br>(PARA MODELOS A COIN CONTROL)<br>(PARA DOSIFICADOR SUPERIOR) | PLAQUE INSTR SECURITE JA<br>(POUR MODELE COIN CONTROL)<br>(POUR BAC A PRODUITS SUPERIEUR |
| 16 | 132340 | CLAMP REF.30173380-2 D80-100 | ABRAZADERA REF.30173380-2 D80-100 | BRIDE REF.30173380-2 D80-100 |
| 17 | 176826 | SELF-LOCKING NUT DIN985-8 B.TRI.M5 | TUER.AUTOBL.DIN985-8 B.TRI.M5 | ECROU AUTOBLOCANT DIN 985-8 B.TRI.M5 |
| 18 | 339358 | TOP SOAP DISPENSER HOSE | TUBO DOSIFICADOR SUPERIOR | TUBE BAC A PRODUITS SUPERIEUR |
| 19 | 149534 | BICR.WASHER B DIN125-ST 5,3 | ARAN.B DIN125-ST BICR. 5,3 | RONDELLE B BICR.DIN125-ST 5,3 |
| 20 | 327064 | HEX SCREW DIN 933 8,8 M5x12 TRIVALENT | TORNILLO HEXAGONAL DIN 933 8,8 M5x12 TRI | VIS HEXAGONALE DIN 933 8,8 M5x12 TRIVALE |
| 21 | 132290 | CLAMP 301730-8 D50-70 | ABRAZADERA 301730-8 D50- 70 | BRIDE 301730-8 D50-70 |
| 22 | 440487 | UPPER SOAP DISPENSER BRACKET | SOPORTE DOSIFICADOR SUPERI | SUPPORT BAC PRODUITS SUPERIEUR |
| 23 | 339341 | DISTRIBUTOR SET | CONJUNTO DISTRIBUIDOR | ENSEMBLE DISTRIBUTEUR |
| 24 | 149476 | BICR.WASHER B DIN125-ST 4,3 | ARAN.B DIN125-ST B.TRI. 4,3 | RONDELLE B DIN125-ST BICR.4,3 |
| 25 | 146258 | BIC.HEX SCREW DIN933-4.8 M4X10 | TOR.EX.DIN933-4.8 B.TRI.M 4X10 | VIS HEX DIN933-4.8 BICR.M 4X10 |

info@zipnasklade.ru
8(800)500-69-51

| Nº | REF | DENOMINATION | DENOMINACIÓN | DENOMINATION |
|---|---|---|---|---|
| 26 | 156679 | CONICAL END-PIECE R-16 D10 | TOPE CONICO REPRIMSA R-16 D10 | BOUCHON CONIQUE R-16 D10 |
| 27 | 146274 | BICR.HEX SCREW DIN933-8 M-5X10 | TOR.EX.DIN933-8.8 B.TRI.M 5X10 | VIS HEX.BICR.DIN933-8.8 M-5X10 |
| 28 | 423418 | HOSE FIXATION PIECE | PERFIL FIJACION TUBOS | PIECE FIXATION TUBES |
| 29 | 140525 | CLAMP 2244-0 | BRIDA UNEX 2244-0 * | BRIDE 2244-0 |
| 30 | 341545 | TORIC GASKET 150X158X4 | JUNTA TORICA 150X158X4 | JOINT TORIQUE 150X158X4 |
| 31 | 155150 | HOSE CLIP ASFA-L W2 8-16 | ABRAZADERA ASFA-L W2 8-16 | COLLIER ASFA-L W2 8-16 |
| 32 | 323493 | WATER INLET AC DI10MM L1,5M | TUBO ENTRADA AC DI10MM L1,5M * | FLEXIBLE ENTRÉE ACDI10MM L1,5M |
| 33 | 323477 | WATER INLET AF DI10MM L1,5M | TUBO ENTRADA AF DI10MM L1,5M * | FLEXIBLE ENTRÉE AFDI10MM L1,5M |
| 34 | 323329 | SIMPLE ELECTROVALVE 329 180 | ELECTROV.SIMPLE 329 180 | ELECTROVANNE SIMPLE 329 180 |
| | 332296 | COIL 255043000000 12VCC | BOBINA 255043000000 12VCC | BOBINE 255043000000 12VCC |
| | 300194 | YELLOW CASE 30053 | ESTUCHE AMARILLO 30053 | BOITE JAUNE 30053 |
| | 300202 | INTEGRAL GUIDE-MEMBRANE 30696 | MEMBRANA-GUIA INTEGRAL 30696 * | MEMBRANE-GUIDE INTEGRALE 30696 |
| 35 | 511212 | 4 TRACK ELECTROVALVE 389 180ºC | ELECTROV.CUADRUPLE 389 180º * | ELECTROVANNE 4 VOIES 389 180ºC |
| | 156265 | REGULATOR 3 L/MIN (BLACK) | REGULADOR DE 3 L/MIN. (NEGRO) | REGULATEUR 3 L/MIN (NOIR) |
| | 332296 | COIL 255043000000 12VCC | BOBINA 255043000000 12VCC | BOBINE 255043000000 12VCC |
| | 510933 | REGULATOR 4 L/MIN.RED | REGULADOR DE 4L/MIN.ROJO CLARO | REGULATEUR 4 L/MIN ROUGE |
| | 300194 | YELLOW CASE 30053 | ESTUCHE AMARILLO 30053 | BOITE JAUNE 30053 |
| | 300202 | INTEGRAL GUIDE-MEMBRANE 30696 | MEMBRANA-GUIA INTEGRAL 30696 * | MEMBRANE-GUIDE INTEGRALE 30696 |
| | 511147 | 4 TRACK ELECTROVALVE (EH020 COIN CONTROL) | ELECTROVALVULA CUATRO VIAS (EH020 COIN CONTROL) | ELECTROVANNE 4 VOIES (EH020 COIN CONTROL) |
| | 156265 | REGULATOR 3 L/MIN (BLACK) | REGULADOR DE 3 L/MIN. (NEGRO) | REGULATEUR 3 L/MIN (NOIR) |
| | 332296 | COIL 255043000000 12VCC | BOBINA 255043000000 12VCC | BOBINE 255043000000 12VCC |
| | 510933 | REGULATOR 4 L/MIN.RED | REGULADOR DE 4L/MIN.ROJO CLARO | REGULATEUR 4 L/MIN ROUGE |
| | 300194 | YELLOW CASE 30053 | ESTUCHE AMARILLO 30053 | BOITE JAUNE 30053 |
| | 156257 | REGULATOR 8 L/MIN (RED) | REGULADOR DE 8 L/MIN. (ROJO) | REGULATEUR 8 L/MIN (ROUGE) |
| | 300202 | INTEGRAL GUIDE-MEMBRANE 30696 | MEMBRANA-GUIA INTEGRAL 30696 * | MEMBRANE-GUIDE INTEGRALE 30696 |
| 36 | 323469 | 1 METER HOSE PARIGI D10XD16 | 1 METRO TUBO PARIGI D10XD16 | 1 METRE TUBE PARIGI D10XD16 |
| 37 | 152165 | BRANCH | BIFURCACION | BIFURCATION |

info@zipnasklade.ru
8(800)500-69-51

| Nº | REF | DENOMINATION | DENOMINACIÓN | DENOMINATION |
|---|---|---|---|---|
| 38 | 344101 | SOAP DOSING INSERTO<br>(EH020 COIN CONTROL) | INSERTO DOSIFICADOR<br>(EH020 COIN CONTROL)<br>. | INSERTO BAC A PRODUITS<br>(EH020 COIN CONTROL) |
| 39 | 430959 | MICROPROCESSOR PLATE COVER<br>(EH020 COIN CONTROL) | TAPA PLACA MICROPROCESADOR<br>(EH020 COIN CONTROL) | COUVERCLE PLAQUE MICROPROCES.<br>(EH020 COIN CONTROL) |
| | 430967 | MICROPROCESSOR PLATE COVER<br>(EH020 LOGI CONTROL)<br>(EH020 LOGI PRO) | TAPA PLACA MICROPROCESADOR<br>(EH020 LOGI CONTROL)<br>(EH020 LOGI PRO) | COUVERCLE PLAQUE MICROPROCES.<br>(EH020 LOGI CONTROL)<br>(EH020 LOGI PRO) |
| 40 | 427112 | DOUBLE ELECTROV. 349 180º 12VCC*<br>(LOGI PRO MODELS ONLY) | ELECTROV.DOBLE 349 180º 12VCC*<br>(PARA MODELOS A LOGI PRO) | ELECTROV.DOUBLE 349 180º 12VCC*<br>(POUR MODELE LOGI PRO) |
| 41 | 10938322 | WATER INLET HOSE | TUBO ENTRADA AGUA | TUBE ENTREE EAU |
| 42 | 10938330 | WATER INLET HOSE | TUBO ENTRADA AGUA | TUBE ENTREE EAU |
| 43 | 10938405 | WATER INLET HOSE | TUBO ENTRADA AGUA | TUBE ENTREE EAU |
| 44 | 10938389 | WATER INLET HOSE | TUBO ENTRADA AGUA | TUBE ENTREE EAU |
| 45 | 10938397 | WATER INLET HOSE | TUBO ENTRADA AGUA | TUBE ENTREE EAU |
| | | | .<br>. | |
| | | WITHOUT ILLUSTRATION | SIN ILUSTRACION | SANS ILLUSTRATION |
| | 798009 | EXT.DOSING KIT HS-6008 MS-610 | KIT DOSIF.EXT.HS-6008 MS-610 | KIT DOSAGE EXT.HS-6008 MS-610 |
| | 796870 | SIPHON CLEANING KIT | KIT LIMPIEZA SIFONES | KIT NETTOYAGE SIPHON |

info@zipnasklade.ru
8(800)500-69-51