NOTES TO USE PARTS LIST

Sheets no. 1, 2, 3, 4, 5, 6, 7 & 8:
Are common for all versions.

Sheet no. 9:
The bottom just refers to three water inlets machines.

Sheet no. 10:
Relates to electrical heated machines.

Sheet no. 11:
Relates to steam heated machines.

Sheet no. 12:
Relates to machines equipped with second drain.

ACLARACIONES PARA / EL USO DEL DESPIECE

Las hojas nº 1, 2, 3, 4, 5 6, 7 y 8:
Son comunes a todas las variantes.

La hoja nº 9:
La parte inferior es sólo para las máquinas con tres entradas de agua.

La hoja nº 10:
Corresponde a las máquinas con calefacción eléctrica.

La hoja nº 11:
Corresponde a las máquinas con calefacción a vapor.

La hoja nº 12:
Corresponde a las máquinas con segundo desagüe.

NOTES UTILISATION VUES ECLATEES

Les feuilles no. 1, 2, 3, 4, 5, 6, 7 et 8:
Sont communes à toutes les versions.

La feuille no. 9:
La partie inférieure est seulement pour les machines à trois arrivées d'eau.

La feuille no. 10:
Correspond aux machines à chauffage électrique.

La feuille no. 11:
Correspond aux machines à chauffage à vapeur.

La feuille no. 12:
Correspond à machines avec deuxième vidange.

info@zipnasklade.ru
8(800)500-69-51

VERY IMPORTANT:
Before ordering parts be sure they have not been modified. Check it on modification sheet, after the corresponding sheet.

MUY IMPORTANTE:
Al pedir una pieza cerciorarse antes de que la misma no ha sido modificada. Si lo hubiese sido, estaria situada como hoja de modificaciones, detrás de la hoja correspondiente.

TRES IMPORTANT:
Avant de commander une pièce, s'assurer qu'elle n'a pas été modifiée. Le verifier sur feuille de modifications, derrière la feuille correspondante.

From Apartir Apartir	To Hasta Jusqu'à
780001	.....

HS - 3040

Cod. nº 289108 A

Rev. nº 00/0499

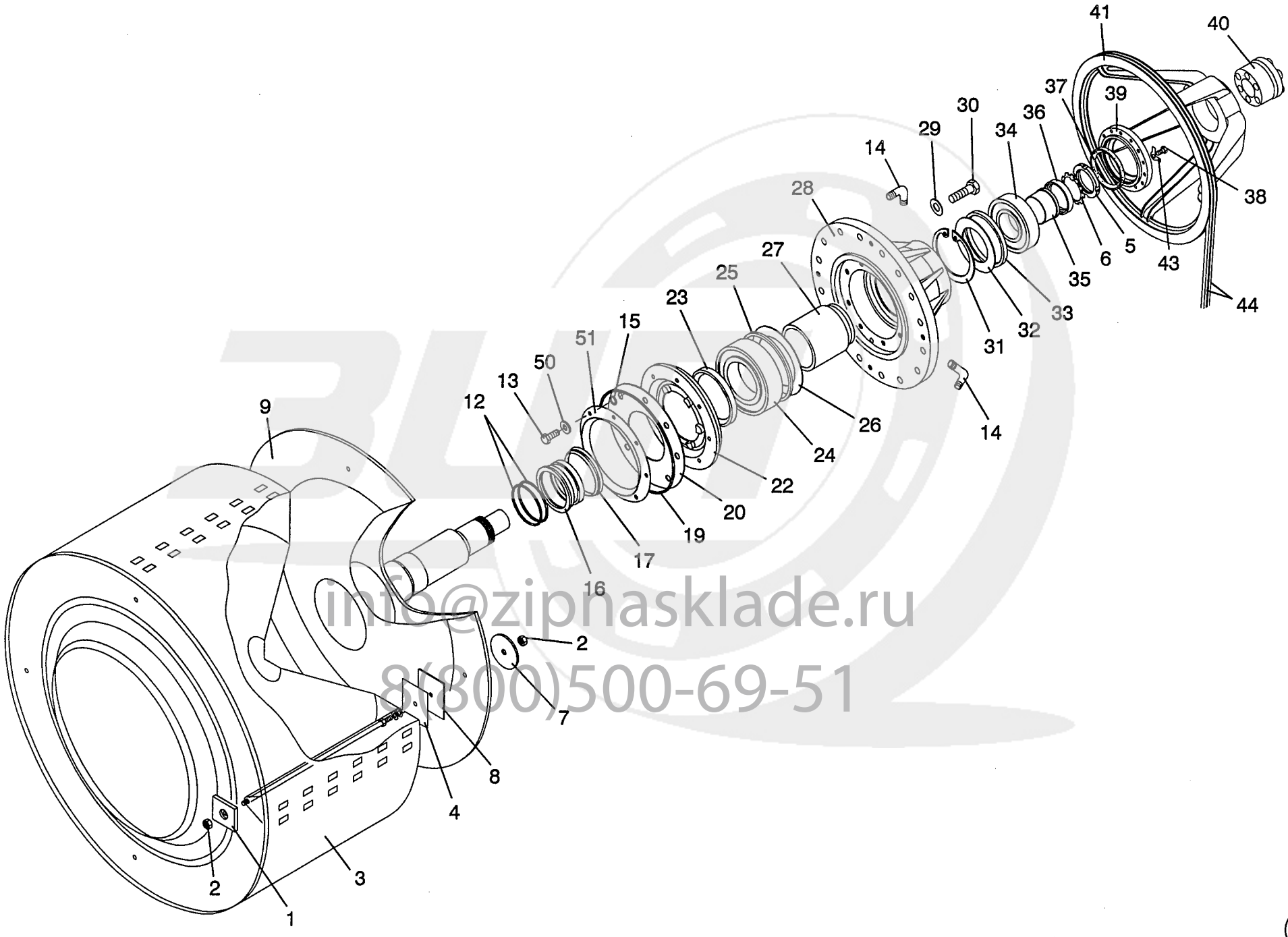

info@zipnasklade.ru
8(800)500-69-51

HS-3040 1

U.15130

Nº	REF.	DENOMINATION	DENOMINACIÓN	DÉNOMINATION
1	294207	BASKET SHOVEL RENFORT	REFUERZO PALA TAMBOR	REFORT PALETTE TAMBOUR
2	149989	INOX HEX NUT DIN934 M20	TUER.EX.DIN934 INOX A2-70 M20	ECROU HEX INOX DIN934 M20
3	294090 *	BAKET BODY	CUERPO TAMBOR	CORPS TAMBOUR
4	294215	BASKET CENTERING PIECE	PIEZA CENTRADO TAMBOR	PIECE CENTRAGE TAMBOUR
5	316562	FIXING NUT KM-17	TUERCA FIJACION KM-17	ECROU FIXATION KM-17
6	316570	LOCKING WASHER MB-17	ARANDELA CIERRE MB-17	RONDELLE FERMETURE MB-17
7	294231	WASHER 82X12X3	ARANDELA 82X21X3	RONDELLE 82X21X3
8	294223	BASKET CENTERING PIECE	PIEZA CENTRADO TAMBOR	PIECE CENTRAGE TAMBOUR
9	294165	BASKET COUPLING	ACOPLAMIENTO TAMBOR	ASSAMBLAGE TAMBOUR
12	193987	TORIC GASKET 120X132X6	JUNTA TORICA 120X132X6	JOINT TORIQUE 120X132X6
13	175687	INOX HEX SCREW DIN 933 M-10X60	TOR.EX.DIN933INOX A2-70 M10X60	VIS HEX.INOX DIN 933 M-10X60
14	122531	HOSE ELBOW 5/8" RE. 46610	CODO MANGUERA 5/8"REF.46610	COUDE TUYAU 5/8" RE. 46610
15	147991	TORIC GASKET 10X23X6,5	JUNTA TORICA 10X23X6,5	JOINT TORIQUE 10X23X6,5
16	294470	SEAL RING	ANILLO RETENES	BAGUE RESERVES
17	316588	RING V-RING V-150 A VITON	ANILLO V-RING V-150 A VITON	BAGUE V-RING V-150 A VITON
19	315580	TORIC GASKET	JUNTA TORICA316,87X330,85X6,99	JOINT TORIQUE
20	294322	SEAL COVER	TAPA RETEN	COUVERCLE RESERVE
22	294314	FRONT SEAL COVER	TAPA RETEN ANTERIOR	COUVERCLE RESERVE AVANT
23	147538	SEAL 150X180X15 BA	RETEN 150X180X15 BA	RESERVE 150X180X15 BA
24	316497	BEARING NU-2224E	RODAMIENTO NU 2224 ECP	ROULEMENT NU-2224E
25	316521	GUIDE RING FRB-10/215	ANILLO DE GUIA FRB 10/215	BAGUE DE GUIDE FRB-10/215
26	294488	GREASE OBTURATION PLATE	PLACA OBTURACION GRASA	PLAQUE OBTURATION GRAISSE
27	294348	BEARING END-PIECE	TOPE COJINETES	ARRET ROULEMENTS
28	294306	BEARING BOX	CAJA COJINETES	BOITE ROULEMENTS
29	149385	BICR.WASHER B DIN125-ST 17	ARAN.B DIN125-ST BICR.17	RONDELLE B DIN125-ST BICR.17
30	147082	HEX SCREW 8G DIN933 M16X60	TOR.EX.DIN933-8.8 BICR.M16X 60	VIS HEX. 8G DIN933 M16X60
31	316539	FLEXIBLE RING I-160 DIN472	ANILLO ELASTICO I-160 DIN 472	BAGUE ELASTIQUE I-160 DIN472
32	294496	GREASE OBTURATION PLATE	PLACA OBTURACION GRASA	PLAQUE OBTURATION GRAISSE
33	316513	GUIDE RING FRB-12,5/160	ANILLO DE GUIA FRB 12.5/160	BAGUE DE GUIDE FRB-12,5/160
34	316505	BEARING 22218 CK	RODAMIENTO 22218 EK	ROULEMENT 22218 CK

info@zipnasklade.ru
8(800)500-69-51

Nº	REF.	DENOMINATION	DENOMINACIÓN	DÉNOMINATION
35	316547	DIASSEMBLY SLEEVE AHX-318	MANGUITO DESMONTAJE AHX-318	MANCHON DEMONTAGE AHX-318
36	294504	SEAL RING	ANILLO RETEN	BAGUE RESERVE
37	121517	SEAL 130X110X12 BA	RETEN 130X110X12 BA	RESERVE 103X110X12 BA
38	192385	BICR.HEX.SCREW DIN933-8 M6X35	TOR.EX.DIN933-8.8 BICR.M 6X 35	VIS.HEX.DIN933-8,8 BICR.M6X35
39	294330	REAR SEAL COVER	TAPA RETEN POSTERIOR	COUVERCLE RESERVE ARRIERE
40	316554	SELFCENT.FIX.UNIT 5B 70X110	UNIDAD FIJ.AUTOCENT.5B 70X110	UNITE FIX.SELFCENT.5B 70X110
41	294355	BASKET PULLEY	POLEA TAMBOR	POULIE TAMBOUR
43	195735	SAFETY WASHER 6,4 DIN 463	ARANDELA SEGURIDAD 6,4 DIN 463	RONDELLE SECURITE 6,4 DIN 463
44	316877	TRAPEZOIDAL BELT SPA-2432 (FOR 50HZ)	CORREA TRAPECIAL SPA-2432 (PARA 50 HZ)	COURROIE TRAPEZOIDALE SPA-2432 (POUR 50 HZ)
	317396	TRAPEZOIDAL BELT SPA-2382 (FOR 60HZ)	CORREA TRAPECIAL SPA-2382 (PARA 60 HZ)	COURROIE TRAPEZOIDALE SPA-2382 (POUR 60 HZ)
50	254144	WASHER D35XD10X6	ARANDELA 35X10,25X6	RONDELLE D35XD10X6
51	294462	V-RING PROTECTION	PROTECCION V-RING	PROTECTION V-RING

info@zipnasklade.ru
8(800)500-69-51

*	294082	COMPLETE BASKET (WITH SHAFT)	TAMBOR COMPLETO (CON EJE)	TAMBOUR COMPLET (AVEC AXE)

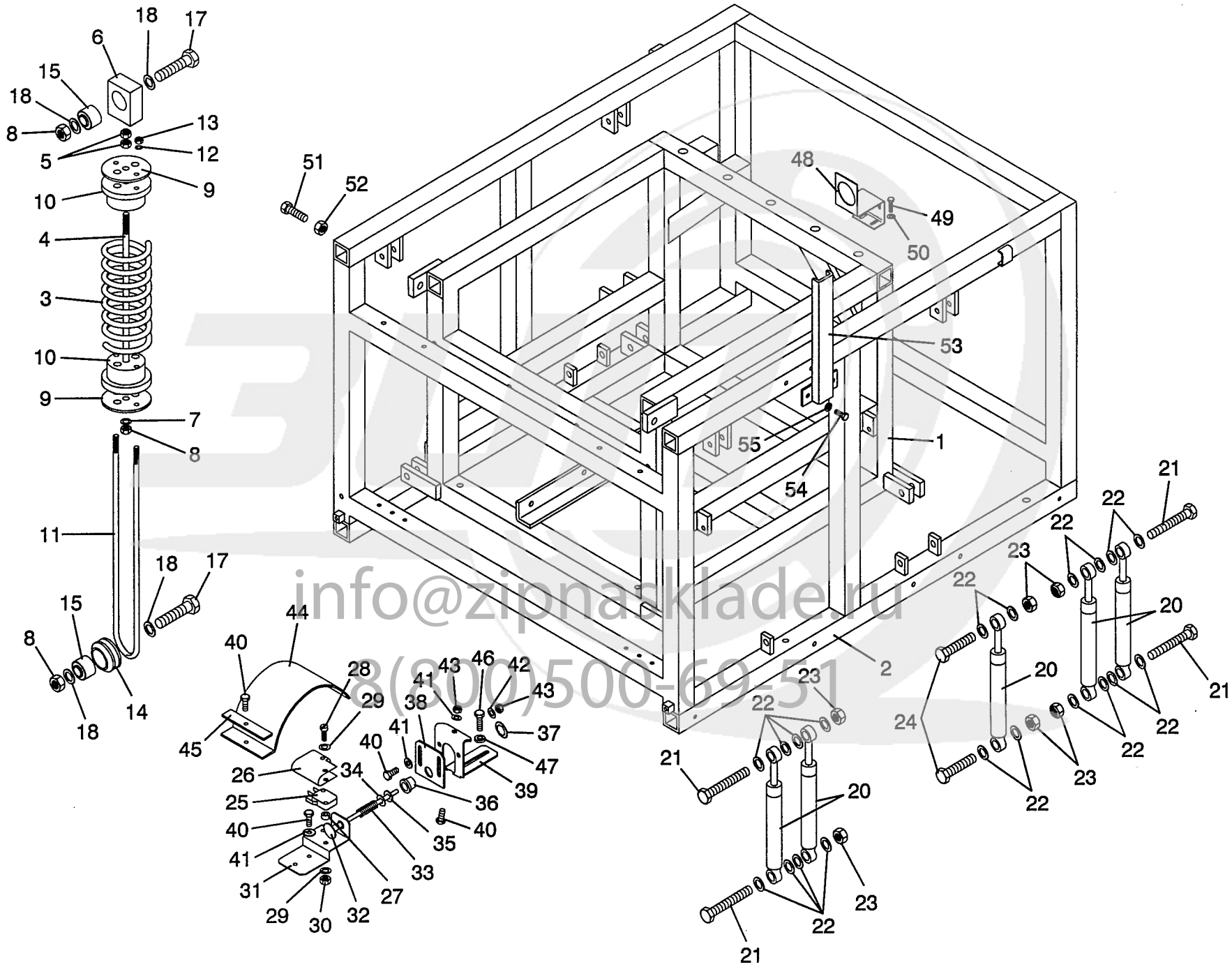

info@zipnasklade.ru
8(800)500-69-51

HS-3040 ②

U.15131

Nº	REF.	DENOMINATION	DENOMINACIÓN	DÉNOMINATION
1	294553	SUSPENDED CHASSIS	CHASIS FLOTANTE	CHASSIS SUSPENDU
2	294546	FIX CHASSIS	CHASIS FIJO	CHASSIS FIXE
3	316737 *	SUSPENSION SPRING	MUELLE SUSPENSION	RESSORT SUSPENSION
4	294728	SUSPENSION BAR	VARILLA SUSPENSION	BAGUETTE SUSPENSION
5	150250	BICR HEX.NUT DIN 934-8 M 14	TUER.EX.DIN934-8 BICR.M14	ECROU HEX.BICR DIN 934-8 M 14
6	294769	SUSPENSION HINGE	CHARNELA SUSPENSION	CHARNIERE SUSPENSION
7	294777	WASHER 33X15X5	ARANDELA 33X15X5	RONDELLE 33X15X5
8	164350	SELFBLOCKING NUT DIN-985 M-14	TUER.AUTOBL.DIN985-8 BICR.M14	ECROU AUTOBLOCANT DIN985 M-14
9	294751	CLAMP SUPPLEMENT	SUPLEMENTO BRIDA	SUPPLEMENT BRIDE
10	294710	SUSPENSION CLAMP	BRIDA SUSPENSION	BRIDE SUSPENSION
11	294736	SUSPENSION PIECE	HORQUILLA SUSPENSION	PIECE SUSPENSION
12	217133	WASHER 27X10X3	ARANDELA 27X10X3	RONDELLE 27X10X3
13	150649	SELFBLOCKING NUT DIN 985 M-10	TUER.AUTOBL.DIN985-8 BICR.M10	ECROU AUTOBLOCANT DIN 985 M-10
14	294744	SUSPENSION SLEEVE	CASQUILLO SUSPENSION	FRETTE SUSPENSION
15	307025	FLEXIBLOC 14X27X45X40ATC265042	FLEXIBLOC 14X27X45X40ATC265042	FLEXIBLOC 14X27X45X40ATC265042
17	316760	HEX.BIC.SCREW DIN931-8 M14X 90	TOR.EX.DIN931-8.8 BICR.M14X 90	VIS HEX DIN931-8.8 BIC.M14X 90
18	149393	BICR WASHER B DIN125-ST 15	ARAN.B DIN125-ST BICR.15	RONDELLE B BICR DIN125-ST 15
20	175091	FRICTION SHOCK-ABSORBER	AMORT.FRICC.154020011336 180N	AMORTISSEUR FRICTION
21	191858	HEX. SCREW 8G DIN931 M10X90	TOR.EX.DIN931-8.8 BICR.M10X 90	VIS HEX. 8G DIN931 M10X90
22	149500	BICR.WASHER B DIN125-ST 10,5	ARAN.B DIN125-ST BICR.10,5	RONDELLE B DIN125-ST BICR.10,5
23	150649	SELFBLOCKING NUT DIN 985 M-10	TUER.AUTOBL.DIN985-8 BICR.M10	ECROU AUTOBLOCANT DIN 985 M-10
24	175745	HEX SCREW 8G DIN 931 M-10X60	TOR.EX.DIN931-8.8 BICR.M10X 60	VIS HEX 8G DIN 931 M-10X60
25	197046	MINISWITCH 83161.344 I W3	MINIRRUPTOR 83161.344 I W3	MINIRRUPTEUR 83161.344 I W3
26	281113	MICROSWITCH ISOLATION	AISLANTE MICRORRUPTOR	ISOLANT MICRORRUPTEUR
27	175364	PLASTIC SEPARATOR 6MM SP78/10	SEPARADOR PLASTICO 6MM.SP78/10	SEPARATEUR PLASTIQUE 6MM
28	302554	CYL.BICR.SCREW DIN84-4.8 M3X25	TOR.CIL.DIN84-4.8 BICR.M 3X25	VIS.CYL DIN84-4.8 BICR M 3X25
29	149484	BICR.WASHER B DIN125-ST 3,2	ARAN.B DIN125-ST BICR. 3,2	RONDELLE B.DIN125-ST BICR. 3,2
30	149906	INOX. HEX. NUT DIN 934 M-3	TUER.EX.DIN934 INOX A2-70 M 3	ECROU HEX. INOX DIN934 M-3
31	261784	MICROSWITCH DRIVE BRACKET	SOPORTE ACCIONADOR MICRORRUP.	SUPPORT ACTIONNEMENT MICRORRUP
32	189407	MICROSWITCH DRIVE	ACCIONADOR MICRORRUPTOR	ACCIONNEMENT MICRORRUPTEUR

info@zipnasklade.ru
8(800)500-69-51

Nº	REF.	DENOMINATION	DENOMINACIÓN	DÉNOMINATION
33	189399	MICROSWITCH DRIVE SPRING	MUELLE ACCIONADOR MICRORRUPTOR	RESSORT ACTIONNEMENT MICRORRUP
34	149534	BICR.WASHER B DIN125-ST 5,3	ARAN.B DIN125-ST BICR. 5,3	RONDELLE B BICR.DIN125-ST 5,3
35	147918	QUICK FIXING 211039-6	SUJEC.RAPIDA MIKALOR 211039-6	FIXATION RAPIDE 211039-6
36	278051	MICRO.DRIVE SLEEVE	CASQUILLO ACCIONADOR MICRO	FRETTE ACTIONNEMENT MICRO
37	134924	QUICK FIXING 2110441	SUJEC.RAPIDA MIKALOR 211044-1	FIXATION RAPIDE 2110441
38	278069	MICROSWITH ACTIVATOR END-PIECE	TOPE ACCIONADOR MICRORRUPTOR	ARRET ACCIONNATEUR MICROINT.
39	278085	MICRO ACTIV. END-PIECE BRACKET	SOPORTE TOPE ACCIONADOR MICRO.	SUPPORT ARRET ACCIONNAT.MICRO
40	146266	BICR.HEX SCREW DIN933-8 M-4X15	TOR.EX.DIN933-4.8 BICR.M 4X 15	VIS HEX BICR.DIN933-8.8 M-4X15
41	219758	WASHER 12X4X1,5	ARANDELA 12X4X1,5	RONDELLE 12X4X1,5
42	149476	BICR.WASHER B DIN125-ST 4,3	ARAN.B DIN125-ST BICR. 4,3	RONDELLE B DIN125-ST BICR.4,3
43	132043	SELFBLOCKING NUT DIN985 M 4	TUER.AUTOBL.DIN985-8 BICR.M 4	ECROU AUTOBLOCANT DIN985 M 4
44	283192	MICROSWITCH PROTECTION COVER	TAPA PROTECCION MICRORRUPTOR	COUVERCLE PROT. MICRORRUPTEUR
45	283200	MICRO PROTECTION FIXING-PIECE	FIJACION PROTECCION MICRO.	FIXATION PROTECTION MICRO
46	165621	BIC HEX SCREW DIN933-8,8 M6X10	TOR.EX.DIN933-8.8 BICR.M 6X 10	VIS HEX DIN933-8,8 BICR M6X10
47	115733	WASHER 16X7X3	ARANDELA 16X7X3	RONDELLE 16X7X3
48	277095	DRAIN BRACKET	SOPORTE DESAGÜE	SUPPORT VIDANGE
49	144964	INOX HEX SCREW DIN 933 M-8X15	TOR.EX.DIN933INOX A2-70 M 8X16	VIS HEX INOX DIN 933 M-8X15
50	149351	INOX A2 WASHER DIN 125 8,4	ARAN. DIN125 INOX A2 8,4	RONDELLE INOX A2 DIN 125 8,4
51	157354	HEX SCREW 8G DIN 933 M-12X45	TOR.EX.DIN933-8.8 BICR.M12X 45	VIS HEX 8G DIN 933 M-12X45
52	150235	BICR.HEX NUT DIN 934-8 M-12	TUER.EX.DIN934-8 BICR.M12	ECROU HEX DIN 934-8 BICR.M-12
53	290981	SIDE PANEL FIXATION	FIJACION TAPAS LATERALES	FIXATION COUVERCLES LATERAUX
54	166652	BIC.HEX SCREW DIN933-8.8 M8X15	TOR.EX.DIN933-8.8 BICR.M 8X 15	VIS HEX DIN933-8.8 BICR. M8X15
55	149518	BICR.WASHER B DIN125-ST 8,4	ARAN.B DIN125-ST BICR. 8,4	RONDELLE.B DIN125-ST BICR.8,4
*	294702	SUSPENSION SET	CONJUNTO SUSPENSION	ENSEMBLE SUSPENSION

info@zipnasklade.ru
8(800)500-69-51

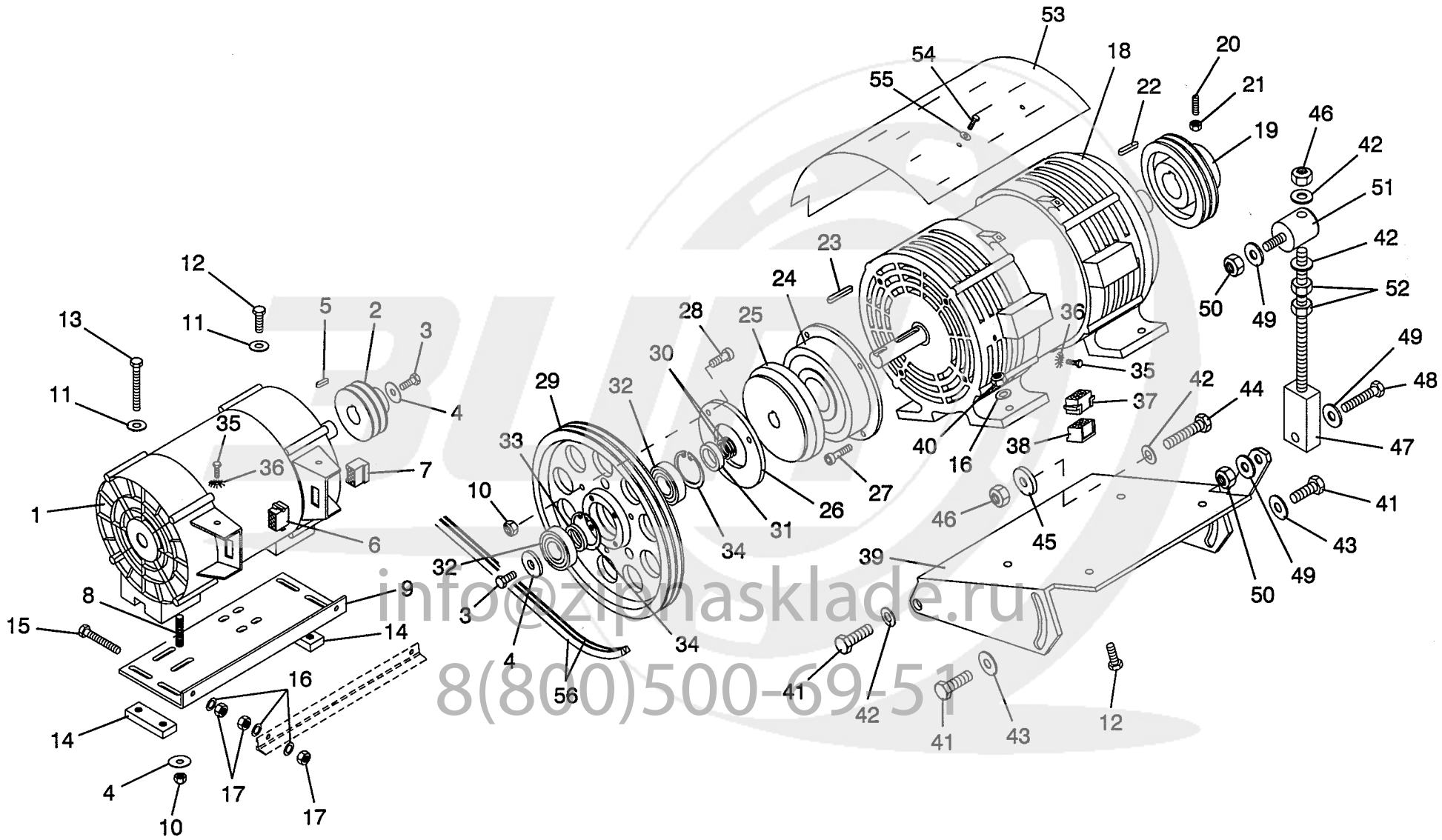

info@zipnasklade.ru
8(800)500-69-51

HS-3040

3

U.15132

Nº	REF.	DENOMINATION	DENOMINACIÓN	DÉNOMINATION
1	316802	MOTOR MT132150/8 12220/380-50 (FOR 220/380 V 50HZ) (FOR 240/415V 50HZ) (FOR 440 V 60HZ)	MOTOR MT132150/8-12220/380-50 (PARA 220/380 V 50HZ) (PARA 240/415V 50HZ) (PARA 440 V 60HZ)	MOTEUR MT132150/8 12220/380-50 (POUR 220/380 V 50HZ) (POUR 240/415V 50HZ) (POUR 44O V 60HZ)
	316810	MOTOR MT132150/8-12208/380-60 (FOR 200V 50HZ) (FOR 220-240/380V 60HZ)	MOTOR MT132150/8-12208/380-60 (PARA 200 V 50HZ) (PARA 220-240/380V 60HZ)	MOTEUR MT132150/8-12208/380-60 (POUR 200 V 50HZ) (POUR 220-240/380V 60HZ)
	316828	MOTOR MT132150/8-12200/346-60 (FOR 200-208 V 60HZ)	MOTOR MT132150/8-12200/346-60 (PARA 200-208 V 60HZ)	MOTEUR MT132150/8-12200/346-60 (POUR 200-208 V 60HZ)
	177949	THERMIC PROTECT.F01-150.5	PROTECT.TERM.THERMIK F01-150.5	PROTECT.THERMIQUE F01-150.5
	186841	BEARING 6305-2Z QE6	RODAMIENTO 6305-2Z	ROULEMENT 6305-2Z QE6
2	294587	WASH MOTOR PULLEY	POLEA MOTOR LAVADO	POULIE MOTEUR LAVAGE
3	146399	BICR HEX SCREW DIN933-8 M8X20	TOR.EX.DIN933-8.8 BICR.M 8X 20	VIS HEX DIN933-8.8 BICR.M8X20
4	111278	WASHER 35X9X4	ARANDELA 35X9X4	RONDELLE 35X9X4
5	128124	PIN DIN 6885-A 40X8X7	CHAVETA DIN 6885-A 40X 8X7	CLAVETTE DIN 6885-A 40X8X7
6	139279	PLUG 280430	CONECTOR 280430	CONNECTEUR 280430
7	139261	PLUG 163007	CONECTOR 163007	CONNECTEUR 163007
8	316836	MOTOR BUMP	ESPARRAGO MOTOR	GOUJON MOTEUR
9	294652	WASH MOTOR PLATE	PLACA MOTOR LAVADO	PLAQUE MOTEUR LAVAGE
10	164285	SELFBLOCKING NUT DIN985 M-8	TUER.AUTOBL.DIN985-8 BICR.M 8	ECROU AUTOBLOCANT DIN985 M-8
11	115428	WASHER 30X10,5X3	ARANDELA 30X10,5X3	RONDELLE 30X10,5X3
12	146977	HEX SCREW 8G DIN 933 M-10X35	TOR.EX.DIN933-8.8 BICR.M10X 35	VIS HEX 8G DIN 933 M-10X35
13	191858	HEX. SCREW 8G DIN931 M10X90	TOR.EX.DIN931-8.8 BICR.M10X 90	VIS HEX. 8G DIN931 M10X90
14	405019	MOTOR PLATE FIXATION	FIJACION PLACA MOTOR	FIXATION PLAQUE MOTEUR
15	146563	BICR HEX SCREW DIN933 M-10X100	TOR.EX.DIN933-8.8 BICR.M10X100	VIS HEX DIN-933-8.8 BI.M10X100
16	149500	BICR.WASHER B DIN125-ST 10,5	ARAN.B DIN125-ST BICR.10,5	RONDELLE B DIN125-ST BICR.10,5
17	150193	BICR HEX NUT DIN 934-8 M10	TUER.EX.DIN934-8 BICR.M10	ECROU HEX DIN 934-8 BICR.M10
18	316620	MOTOR MT132150/2-3 220/380-50 (FOR 220/380 V 50HZ) (FOR 240/415V 50HZ) (FOR 440 V 60HZ)	MOTOR MT132150/2-4 220/380-50 (PARA 220/380 V 50HZ) (PARA 240/415V 50HZ) (PARA 440 V 60HZ)	MOTEUR MT132150/2-3 220/380-50 (POUR 220/380 V 50HZ) (POUR 240/415V 50HZ) (POUR 44O V 60HZ)
	316786	MOTOR MT132150/2-4 208/380-60 (FOR 200V 50HZ) (FOR 220-240/380V 60HZ)	MOTOR MT132150/2-4 208/380-60 (PARA 200 V 50HZ) (PARA 220-240/380V 60HZ)	MOTEUR MT132150/2-4 208/380-60 (POUR 200 V 50HZ) (POUR 220-240/380V 60HZ)
	316794	MOTOR MT132150/2-4 200/346-60 (FOR 200-208 V 60HZ)	MOTOR MT132150/2-4 200/346-60 (PARA 200-208 V 60HZ)	MOTUER MT132150/2-4 200/346-60 (POUR 200-208 V 60HZ)

info@zipnasklade.ru
8(800)500-69-51

Nº	REF.	DENOMINATION	DENOMINACIÓN	DÉNOMINATION
	177949	THERMIC PROTECT.F01-150.5	PROTECT.TERM.THERMIK F01-150.5	PROTECT.THERMIQUE F01-150.5
	101907	BEARING 6306-2Z QE6 (COUPLING SIDE)	RODAMIENTO 6306-2Z QE6 (LADO ACOPLE)	ROULEMENT 6306-2Z QE6 (COTE COUPLAGE)
	305789	BEARING 6208-2Z QE6 (FAN SIDE)	RODAMIENTO 6208-2Z QE6 (LADO VENTILADOR)	ROULEMENT 6208-2Z QE6 (CÔTÈ VENTILATEUR)
19	294579	EXTRACT MOTOR PULLEY (FOR 5OHZ)	POLEA MOTOR CENTRIFUGADO (PARA 50 HZ)	POULIE MOTEUR ESSORAGE (POUR 50 HZ)
	294785	EXTRACT MOTOR PULLEY (FOR 60HZ)	POLEA MOTOR CENTRIFUGADO (PARA 60 HZ)	POULIE MOTEUR ESSORAGE (POUR 60 HZ)
20	144204	ALLEN BUMP DIN 913 M-8X25	ESP.ALL.DIN913-10.9 M 8X25	GOUJON ALLEN DIN 913 M-8X25
21	150201	BICR.HEX NUT DIN 934-8 M-8	TUER.EX.DIN934-8 BICR.M 8	ECROU HEX.DIN 934-8 BICR.M-8
22	316679	PIN DIN 6885-5 50X10X8	CHAVETA DIN 6885-A 50X10X8	CLAVETTE DIN 6885-A 50X10X8
23	127720	PIN DIN 6885-A 30X 8X7	CHAVETA DIN 6885-A 30X 8X7	CLAVETTE DIN 6885-A 30X 8X7
24	294454 *	CLUTCH COIL STATOR	CARCASA BOBINA EMBRAGUE	INDUCTEUR BOBINE EMBRAYAGE
25	318014 *	ROTOR 14.105.16.1-0-D25	ROTOR 14.105.16.1-0-D25	ROTOR 14.105.16.1-0-D25
26	318022 *	ARMATURE PLATE 14.105.16.0.3	ARMADURA 14.105.16.0.3	DISQUE ARMATURE 14.105.16.0.3
27	144394	ALLEN SCREW DIN912 M8X20	TOR.ALLDIN912-8.8 BICR.M 8X 20	VIS ALLEN DIN912 M8X20
28	316695	ALLEN SCREW DIN7984-8 M8X 25	TOR.ALLDIN7984-8.8 BICR.M 8X25	VIS ALLEN DIN7984-8.8 B.M8X 25
29	294363	CLUTCH PULLEY	POLEA EMBRAGUE	POULIE EMBRAYAGE
30	316661	ADJUSTMENT WASHER PS25X35X0,1	ARAN.AJUSTE PS25X35X0,1 DIN988	RONDELLE REGLAGE PS25X35X0,1
31	294603	PULLEY BEARING SEPARATOR	SEPARADOR POLEA EMBRAGUE	SEPARATEUR ROULEMENTS POULIE
32	186841	BEARING 6305-2Z QE6	RODAMIENTO 6305-2Z	ROULEMENT 6305-2Z QE6
33	294611	CLUTCH PULLEY SEPARATOR	SEPARADOR COJINETES POLEA	SEPARATEUR POULIE EMBRAYAGE
34	316687	FLEXIBLE RING I-61 DIN472	ANILLO ELASTICO I- 62 DIN 472	BAGUE ELASTIQUE I-62 DIN472
35	300632	INOX A2-70 SCREW DIN85 M5X 8	TOR.PLA.DIN85 INOX A2-70 M5X 8	VIS DIN85 INOX A2-70 M5X 8
36	149724	BICR EXT.TOOT.WASH.DIN6798 M5	ARAN.DEN.EXTER.BICR.DIN6798M 5	RONDEL DEN.EX.BICR.DIN6798 M5
37	139303	PLUG 180948-0	CONECTOR 180906-0	CONNECTEUR 180948-0
38	139170	PLUG 180904-0	CONECTOR 180904-0	CONNECTEUR 180904-0
39	294660	EXTRACT MOTOR PLATE	PLACA MOTOR CENTRIFUGADO	PLAQUE MOTEUR ESSORAGE
40	150649	SELFBLOCKING NUT DIN 985 M-10	TUER.AUTOBL.DIN985-8 BICR.M10	ECROU AUTOBLOCANT DIN 985 M-10
41	175786	BIC.HEX SCREW DIN933-8.M16X40	TOR.EX.DIN933-8.8 BICR.M16X 40	VIS HEX.DIN933-8,8 BICR M16X40
42	149385	BICR.WASHER B DIN125-ST 17	ARAN.B DIN125-ST BICR.17	RONDELLE B DIN125-ST BICR.17

info@zipnasklade.ru
8(800)500-69-51

Nº	REF.	DENOMINATION	DENOMINACIÓN	DÉNOMINATION
43	255992	WASHER 36X17X5	ARANDELA 36X17X6	RONDELLE 36X17X5
44	175729	HEX SCREW 8G DIN 931 M-16X100	TOR.EX.DIN931-8.8 BICR.M16X100	VIS HEX 8G DIN 931 M-16X100
45	200626	WASHER 50X17X9	ARANDELA 50X17X9	RONDELLE 50X17X9
46	173260	SELF-BLOCKING NUT DIN 985 M-16	TUER.AUTOBL.DIN985-8 BICR.M16	ECROU AUTOBLOCANT DIN 985 M-16
47	294686	EXTRACT MOTOR TIGHTENER	TENSOR MOTOR CENTRIFUGADO	TENDEUR MOTOR ESSORAGE
48	163600	HEX SCREW 8G DIN-933 M-14X60	TOR.EX.DIN933-8.8 BICR.M14X 60	VIS HEX 8G DIN-933 M-14X60
49	149393	BICR WASHER B DIN125-ST 15	ARAN.B DIN125-ST BICR.15	RONDELLE B BICR DIN125-ST 15
50	164350	SELFBLOCKING NUT DIN-985 M-14	TUER.AUTOBL.DIN985-8 BICR.M14	ECROU AUTOBLOCANT DIN985 M-14
51	294637	TIGHTENER BUMP	BULON TENSOR	GOUJON TENDEUR
52	150276	BICR HEX.NUT DIN934-8 M-16	TUER.EX.DIN934-8 BICR.M16	ECROU HEX.DIN934-8 BICR M-16
53	299941	MOTOR PROTECTION	PROTECCION MOTOR	PROTECTION MOTEUR
54	165621	BIC HEX SCREW DIN933-8,8 M6X10	TOR.EX.DIN933-8.8 BICR.M 6X 10	VIS HEX DIN933-8,8 BICR M6X10
55	149526	BICR.WASHER B DIN125-ST 6,4	ARAN.B DIN125-ST BICR. 6,4	RONDELLE B DIN125-ST BICR.6,4
56	316729	TRAPEZOIDAL BELT SPZ-1662	CORREA TRAPECIAL SPZ-1662	COURROIE TRAPEZOIDALE SPZ-1662

info@zipnasklade.ru
8(800)500-69-51

*	289090	(COMPLETE) CLUTCH	EMBRAGUE (COMPLETO)	EMBROYAGE(COMPLET)

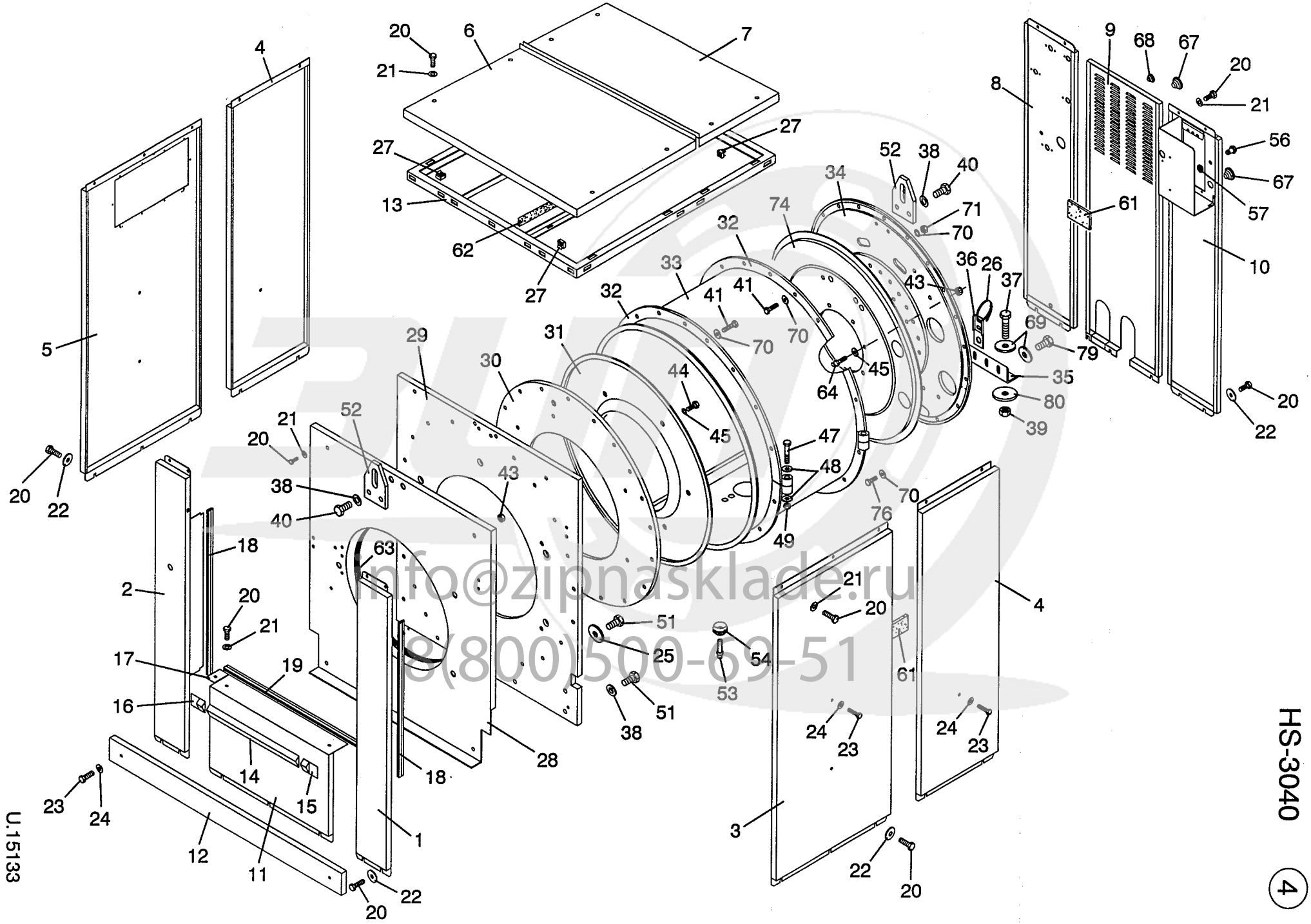

info@zipnasklade.ru
8(800)500-69-51

Nº	REF.	DENOMINATION	DENOMINACIÓN	DÉNOMINATION
1	299776	RIGHT FRONT PANEL (INOX)	TAPA FRONTAL DERECHA (INOX)	COUVERCLE FRONTAL DROIT (INOX)
	299842	RIGHT FRNTAL PANEL (RED PAINTED WITH MODEL)	TAPA FRONTAL DERECHA (PINTADA ROJA CON MODELO)	COUVERCLE FRONTAL DROIT (PEINTE ROUGE AVEC MODELE)
	299800	RIGHT FRONT PANEL (RED PAINTED WITHOUT MODEL)	TAPA FRONTAL DERECHA (PINTADA ROJA SIN MODELO)	COUVERCLE FRONTAL DROIT (PEINTE ROUGE SANS MODELE)
	299859	RIGTH FRONT PANEL (GREY PAINTED WITH MODEL)	TAPA FRONTAL DERECHA (PINTADA GRIS CON MODELO)	COUVERCLE FRONTAL DROIT (PEINTE GRIS AVEC MODELE)
	299834	RIGHT FRONT PANEL (GREY PAINTED WITHOUT MODEL)	TAPA FRONTAL DERECHA (PINTADA GRIS SIN MODELO)	COUVERCLE FRONTAL DROIT (PEINTE GRIS SANS MODELE)
2	299768	LEFT FRONT PANEL (INOX)	TAPA FRONTAL IZQUIERDA (INOX)	COUVERCLE FRONTAL GAUCHE (INOX)
	299818	LEFT FRONT PANEL (RED PAINTED)	TAPA FRONTAL IZQUIERDA (PINTADA ROJA)	COUVERCLE FRONTAL GAUCHE (PEINTE ROUGE)
	299826	LEFT FRONT PANEL (GREY PAINTED)	TAPA FRONTAL IZQUIERDA (PINTADA GRIS)	COUVERCLE FRONTAL GAUCHE (PEINTE GRIS)
3	294934	RIGHT SIDE PANEL	TAPA LATERAL DERECHA	COUVERCLE LATERAL DROIT
4	295006	REAR SIDE PANEL	TAPA LATERAL POSTERIOR	COUVERCLE LATERAL ARRIERE
5	294900	LEFT SIDE PANEL	TAPA LATERAL IZQUIERDA	COUVERCLE LATERAL GUACHE
6	294967	FRONT UPPER PANEL	TAPA SUPERIOR ANTERIOR	COUVECLE SUPERIEUR FRONTAL
7	293043	REAR UPPER PANEL	TAPA SUPERIOR POSTERIOR	COUVERCLE SUPERIEUR ARRIERE
8	294959	LEFT SIDE REAR PANEL	TAPA POSTERIOR LATERAL IZQDA.	COUVERCLE ARRIERE LATER.GAUCHE
9	294942	CENTRAL REAR PANEL	TAPA POSTERIOR CENTRAL	COUVERCLE ARRIERE CENTRAL
10	294918	RIGHT SIDE REAR PANEL	TAPA POSTERIOR LATERAL DERECHA	COUVERCLE ARRIERE LATER.DROIT
11	277822	LOWER FRONT LID	TAPA FRONTAL INFERIOR	COUVERCLE FRONTAL INFERIEUR
12	294975	SOCKET	ZOCALO	SOCLE
13	294801	UPPER FRAME	BASTIDOR SUPERIOR	BATI SUPERIEUR
14	242966	PROTECTION PROFILE	PERFIL PROTECCION	PROFILE PROTECTION
15	174581	TERMINAL RE. 4776/V-4 RIGHT	TERMINAL REF.V-4 DERECHA	TERMINAL REF 4776/V-4 DROITE
16	174599	TERMINAL RE 4776/V-4 LEFT	TERMINAL REF.V-4 IZQUIERDA	TERMINAL REF 4776/V-4 GAUCHE
17	277814	LOWER COVER SUPPLEMENT	SUPLEMENTO TAPA INFERIOR	SUPPLEMENT COUVERCLE INFERIEUR
18	290585	RIGHT & LEFT FRONT PROFILE	PERFIL FRONTAL DER.E IZQU.	PROFILE FRONTAL DROIT/GAUCHE
19	278713	LOWER FRONT PROFILE	PERFIL FRONTAL INFERIOR	PROFILE FRONTAL INFERIEUR
20	144964	INOX HEX SCREW DIN 933 M-8X15	TOR.EX.DIN933INOX A2-70 M 8X16	VIS HEX INOX DIN 933 M-8X15

info@zipnasklade.ru
8(800)500-69-51

Nº	REF.	DENOMINATION	DENOMINACIÓN	DÉNOMINATION
21	149351	INOX A2 WASHER DIN 125 8,4	ARAN. DIN125 INOX A2 8,4	RONDELLE INOX A2 DIN 125 8,4
22	217133	WASHER 27X10X3	ARANDELA 27X10X3	RONDELLE 27X10X3
23	144907	INOX HEX SCREW DIN 933 M-6X10	TOR.EX.DIN933INOX A2-70 M 6X10	VIS HEX INOX DIN 933 M-6X10
24	149310	INOX.A2 WASHER DIN125 6,4	ARAN. DIN125 INOX A2 6,4	RONDELLE INOX.A2 DIN125 6,4
25	269126	WASHER 60X17X12	ARANDELA 60X17X12	RONDELLE 60X17X12
26	140525	CLAMP 2244-0	BRIDA UNEX 2244-0	BRIDE 2244-0
27	174532	CAGED NUT M-8 R-310011-6	TUER.ENJ.M8 1,8-3,2 R.310011-6	ECROU ENCAGE M-8 R-310011-6
28	294991	FRONT PANEL	TAPA FRONTAL	COUVERCLE FRONTAL
29	294371	FRONT PLATE	PLACA FRONTAL	PLAQUE FRONTAL
30	294389	OUTER-DRUM FRONT CROWN	CORONA FRONTAL ENVOLVENTE	COURRONE FRONTAL CUVE
31	294421	OUTER-DRUM FRONT PANEL	FRONTAL ENVOLVENTE	FRONTAL CUVE
32	294538	OUTER-DRUM FIXING RING	ARO FIJACION ENVOLVENTE	BAGUE FIXATION CUVE
33	294249	OUTER-DRUM	ENVOLVENTE	CUVE
34	294397	REAR PLATE	PLACA POSTERIOR	PLAQUE ARRIERE
35	294520	REAR PLATE ANGLE	ANGULO PLACA POSTERIOR	ANGLE PLAQUE ARRIERE
36	245142	CLAMP	BRIDA	BRIDE
37	147058	BICR.HEX.SCREW DIN931 M14X110	TOR.EX.DIN931-8.8 BICR.M14X110	VIS HEX.DIN931-8 BICRM M14X110
38	149385	BICR.WASHER B DIN125-ST 17	ARAN.B DIN125-ST BICR.17	RONDELLE B DIN125-ST BICR.17
39	164350	SELFBLOCKING NUT DIN-985 M-14	TUER.AUTOBL.DIN985-8 BICR.M14	ECROU AUTOBLOCANT DIN985 M-14
40	175786	BIC.HEX SCREW DIN933-8.M16X40	TOR.EX.DIN933-8.8 BICR.M16X 40	VIS HEX.DIN933-8,8 BICR M16X40
41	146688	BI HEX.SCREW DIN933-8. M12X 50	TOR.EX.DIN933-8.8 BICR.M12X 50	VIS HEX.DIN933-8.8 BICR.M12X50
43	150649	SELFBLOCKING NUT DIN 985 M-10	TUER.AUTOBL.DIN985-8 BICR.M10	ECROU AUTOBLOCANT DIN 985 M-10
44	145003	INOX HEX SCREW DIN 933 M-10X50	TOR.EX.DIN933INOX A2-70 M10X50	VIS HEX INOX DIN 933 M-10X50
45	175273	USIT GASKET TYPE UA 16X10X1,5	JUNTA USIT TIPO UA 16X10X1,5	JOINT USIT TYPE UA 16X10X1,5
47	175703	HEX SCREW 8G DIN 931 M-14X100	TOR.EX.DIN931-8.8 BICR.M14X100	VIS HEX 8G DIN 931 M-14X100
48	149393	BICR WASHER B DIN125-ST 15	ARAN.B DIN125-ST BICR.15	RONDELLE B BICR DIN125-ST 15
49	164350	SELFBLOCKING NUT DIN-985 M-14	TUER.AUTOBL.DIN985-8 BICR.M14	ECROU AUTOBLOCANT DIN985 M-14
51	175711	HEX SCREW 8G DIN 931 M-16X90	TOR.EX.DIN931-8.8 BICR.M16X 90	VIS HEX 8G DIN 931 M-16X90
52	216903	LOADING HOOK	GANCHO DE CARGA	CROCHET DE CHARGEMENT
53	193862	NTC RESISTANCE 2381 640 90042	RESISTENCIA NTC 2381 640 90042	RESISTANCE NTC 2381 640 90042

info@zipnasklade.ru
8(800)500-69-51

Nº	REF.	DENOMINATION	DENOMINACIÓN	DÉNOMINATION
54	256149	SENSOR SHEATH LODGING	PASAMUROS SENSOR	LOGEMENT SENSEUR
56	140103	STUFFING-BOX PG-11	PRENSAES.NORMADIX 601104 PG-11	PRESSE-ETOUPES PG-11
57	140236	COUNTERNUT PG-11	TUERCA PG 281104 PG-11	CONTREECROU PG-11
61	219543	ANTI-VIBRATION PIECE	PIEZA ANTI-VIBRACION	PIECE ANTI-VIBRATION
62	220038	UPPER COVER SUPPORT	APOYO TAPAS SUPERIORES	APPUI COUVERCLES SUPERIEURS
63	165472	ETHILENE-PROP. PROFILE (1 METER)	PERFIL ETILENO-PROP.REF.44117L (1 METRO)	PROFILE ETHILENE-PROP. (1 METRE)
64	157271	INOX HEX SCREW DIN933 M10X35	TOR.EX.DIN933INOX A2-70 M10X35	VIS HEX INOX DIN933 M10X35
67	139683	CONE ECPC-6	CONO HIMEL ECPC-6	CONE ECPC-6
68	181701	LEGRAND CONE 91911	CONO LEGRAND 91911	CONE LEGRAND 91911
69	294512	WASHER 40X15X8	ARANDELA 40X15X8	RONDELLE 40X15X8
70	278853	WASHER 30X12,5X4	ARANDELA 30X12,5X4	RONDELLE 30X12,5X4
71	150656	SELFBLOCKING NUT DIN985 M-12	TUER.AUTOBL.DIN985-8 BICR.M12	ECROU AUTOBLOCANT DIN985 M-12
74	294439	OUTER-DRUM BOTTOM	FONDO ENVOLVENTE	FOND CUVE
76	176883	BIC.HEX SCREW DIN933-8 M12X35	TOR.EX.DIN933-8.8 BICR.M12X 35	VIS HEX DIN933-8,8 BICR.M12X35
79	186312	HEX SCREW 8G DIN933 M14X35	TOR.EX.DIN933-8.8 BICR.M14X 35	VIS HEX 8G DIN933 M14X35
80	290973	WASHER 50X15X10	ARANDELA 50X15X10	RONDELLE 50X15X10

info@zipnasklade.ru
8(800)500-69-51

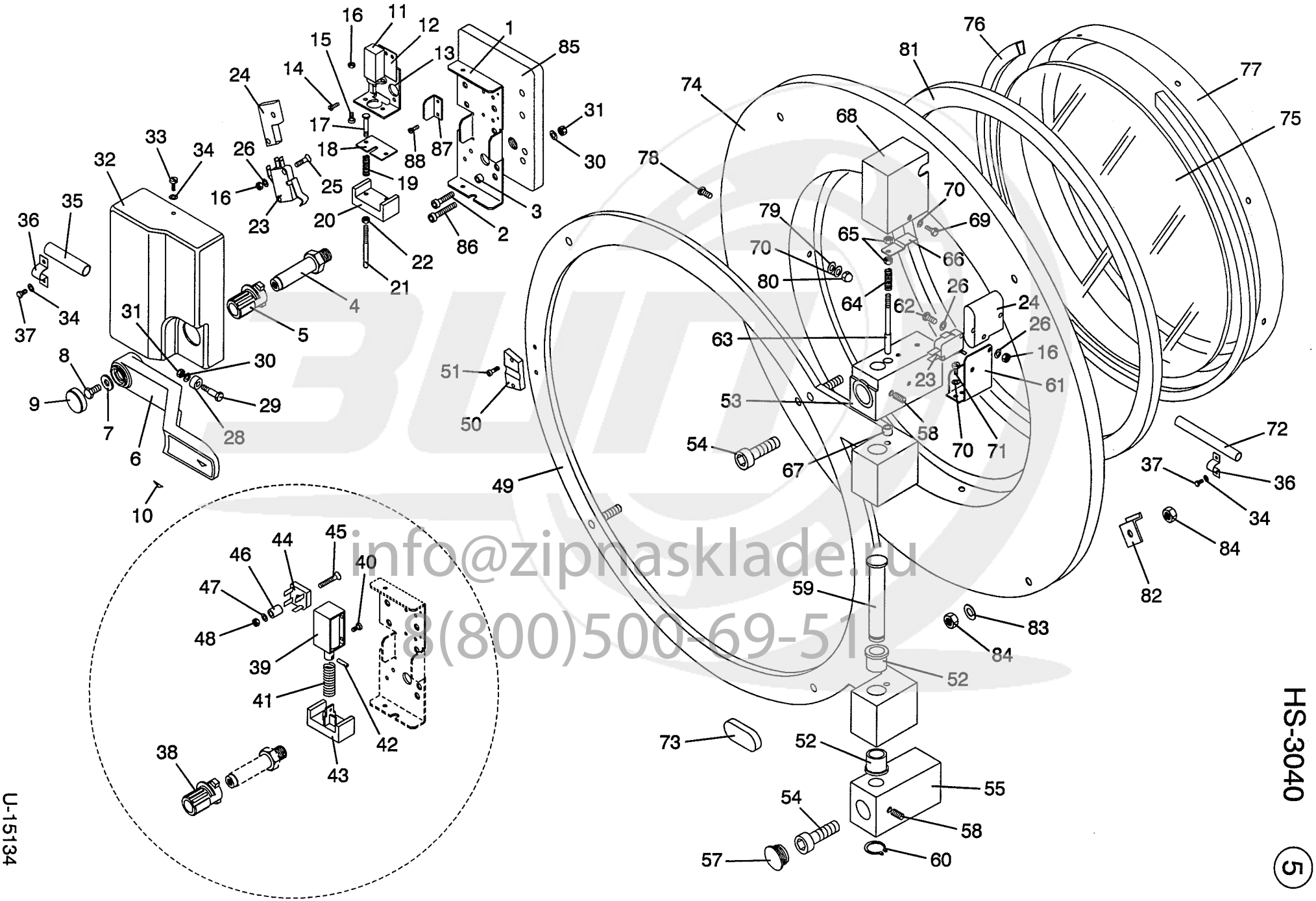

info@zipnasklade.ru
8(800)500-69-51

U-15134

HS-3040

Nº	REF.	DENOMINATION	DENOMINACIÓN	DÉNOMINATION
1	276469	SAFETY LOCK BRACKET	SOPORTE CIERRE SEGURIDAD	SUPPORT FERMETURE DE SECURITE
2	144352	ALLEN SCREW DIN912 M-6X25	TOR.ALLDIN912-8.8 BICR.M 6X 25	VIS ALLEN DIN912 M-6X25
3	276527	LOCK END-PIECE	TOPE CIERRE	ARRET FERMETURE
4	276485	LOCK SHAFT	EJE CIERRE	AXE FERMETURE
5	283671	LOCK KNOB UNION (FOR THERMO-ACTUATOR LOCK)	UNION EMPUÑADURA CIERRE (PARA CIERRE TERMOACTUADOR)	UNION POIGNEE FERMETURE (POUR FERMETURE THERMO-ACTION)
6	199257	KNOB	EMPUÑADURA	POIGNEE
7	115733	WASHER 16X7X3	ARANDELA 16X7X3	RONDELLE 16X7X3
8	165621	BIC HEX SCREW DIN933-8,8 M6X10	TOR.EX.DIN933-8.8 BICR.M 6X 10	VIS HEX DIN933-8,8 BICR M6X10
9	189993	KNOB STOPPER	TAPON EMPUÑADURA	BOUCHON POIGNEE
10	193599	KNOB PLATE	PLACA EMPUÑADURA	PLAQUE POIGNEE
11	196774	THERMO-ACTUATOR 100331 15 (FOR THERMO-ACTUATOR LOCK)	TERMOACTUADOR 100331.15 NTA 6 (PARA CIERRE TERMOACTUADOR)	THERMO-ACTIONNEMENT 100331 15 (POUR FERMETURE THERMO-ACTION)
12	276535	THERMO-ACTUATOR ISOLATION (FOR THERMO-ACTUATOR LOCK)	AISLANTE TERMOACTUADOR (PARA CIERRE TERMOACTUADOR)	ISOLANT THERMO-ACTIONNEMENT (POUR FERMETURE THERMO-ACTION)
13	276493	THERMO-ACTUATOR BRACKET (FOR THERMO-ACTUATOR LOCK)	SOPORTE TERMOACTUADOR (PARA CIERRE TERMOACTUADOR)	SUPPORT THERMO-ACTIONNEMENT (POUR FERMETURE THERMO-ACTION)
14	146019	BICR CYL SCREW DIN 84-4.8 M3X5 (FOR THERMO-ACTUATOR LOCK)	TOR.CIL.DIN84-4.8 BICR.M 3X 5 (PARA CIERRE TERMOACTUADOR)	VIS CYL BICR.DIN 84-4.8 M 3X 5 (POUR FERMETURE THERMO-ACTION)
15	146027	BICR CYL SCREW DIN84-4 M 3X 7 (FOR THERMO-ACTUATOR LOCK)	TOR.CIL.DIN84-4.8 BICR.M 3X 7 (PARA CIERRE TERMOACTUADOR)	VIS CYL BICR DIN84-4.8 M 3X 7 (POUR FERMETURE THERMO-ACTION)
16	149906	INOX. HEX. NUT DIN 934 M-3 (FOR THERMO-ACTUATOR LOCK)	TUER.EX.DIN934 INOX A2-70 M 3 (PARA CIERRE TERMOACTUADOR)	ECROU HEX. INOX DIN934 M-3 (POUR FERMETURE THERMO-ACTION)
17	278622	SLIDING BLOCKING SCREW (FOR THERMO-ACTUATOR LOCK)	TORNILLO BLOQUEADOR DESLIZANTE (PARA CIERRE TERMOACTUADOR)	VIS BLOQUEUR COULISSANT (POUR FERMETURE THERMO-ACTION)
18	280891	SLIDING BLOCKING PIECE (FOR THERMO-ACTUATOR LOCK)	PIEZA BLOQUEADOR DESLIZANTE (PARA CIERRE TERMOACTUADOR)	PIECE BLOQUEUR COULISSANT (POUR FERMETURE THERMO-ACTION)
19	198069	SPRING (FOR THERMO-ACTUATOR LOCK)	MUELLE COMPENSADOR (PARA CIERRE TERMOACTUADOR)	RESSORT (POUR FERMETURE THERMO-ACTION)
20	272575	SLIDING BLOCKER (FOR THERMO-ACTUATOR LOCK)	BLOQUEADOR DESLIZANTE (PARA CIERRE TERMOACTUADOR)	BLOQUEUR COULISSANT (POUR FERMETURE THERMO-ACTION)
21	276501	MICROSWITCH DRIVE (FOR THERMO-ACTUATOR LOCK)	ACCIONADOR MICRORRUPTOR (PARA CIERRE TERMOACTUADOR)	ACTIONNEMENT MICRORRUPTEUR (POUR FERMETURE THERMO-ACTION)
22	149922	INOX HEX. NUT DIN 934 M-4 (FOR THERMO-ACTUATOR LOCK)	TUER.EX.DIN934 INOX A2-70 M 4 (PARA CIERRE TERMOACTUADOR)	ECROU HEX. INOX DIN 934 M-4 (POUR FERMETURE THERMO-ACTION)
23	279760	MICROSWITCH	MINIRRUPTOR	MICRORRUPTEUR

info@zipnasklade.ru
8(800)500-69-51

Nº	REF.	DENOMINATION	DENOMINACIÓN	DÉNOMINATION
24	281113	MICROSWITCH ISOLATION	AISLANTE MICRORRUPTOR	ISOLANT MICRORRUPTEUR
25	303131	BICR.SCREW DIN963-4.8 M 3X 20	TOR.AV.DIN963-4.8 BICR M 3X20	VIS.T/FRAIS DIN963-4.8 B.M3X20
26	149484	BICR.WASHER B DIN125-ST 3,2	ARAN.B DIN125-ST BICR. 3,2	RONDELLE B.DIN125-ST BICR. 3,2
28	276519	KNOB ROLL	RODILLO EMPUÑADURA	ROULEAU POIGNEE
29	276477	KNOB BOLT	BULON EMPUÑADURA	BOULON POIGNEE
30	149526	BICR.WASHER B DIN125-ST 6,4	ARAN.B DIN125-ST BICR. 6,4	RONDELLE B DIN125-ST BICR.6,4
31	176834	SELFBLOCKING NUT DIN985 M-6	TUER.AUTOBL.DIN985-8 BICR.M 6	ECROU AUTOBLOCANT DIN985 M-6
32	199307	SAFETY LOCK BOX	CAJA CIERRE SEGURIDAD	BOITE FERMETURE SECURITE
33	300632	INOX A2-70 SCREW DIN85 M5X 8	TOR.PLA.DIN85 INOX A2-70 M5X 8	VIS DIN85 INOX A2-70 M5X 8
34	149369	INOX A2 WASHER DIN 125 5,3	ARAN. DIN125 INOX A2 5,3	RONDELLE INOX A2 DIN 125 5,3
35	278036	WIRE PROTECTION HOSE	TUBO PROTECCION CABLES	TUBE PROTECTION CABLES
36	276824	WIRE PROTECTION CLAMP	BRIDA PROTECCION CABLES	BRIDE PROTECTION CABLES
37	144774	INOX HEX SCREW DIN 933 M-5X10	TOR.EX.DIN933INOX A2-70 M 5X10	VIS HEX INOX DIN 933 M-5X10
38	283689	LOCK KNOB JOINTING (FOR COIL LOCK)	UNION EMPUÑADURA CIERRE (PARA CIERRE BOBINA)	UNION POIGNEE FERMETURE (POUR FERMETURE BOBINE)
39	283697	SAFETY LOCK COIL (FOR COIL LOCK)	BOBINA CIERRE SEGURIDAD (PARA CIERRE BOBINA)	BOBINE FERMETURE SECURITE (POUR FERMETURE BOBINE)
40	147561	SCREW DIN963-4.8 M 3X 7 (FOR COIL LOCK)	TOR.AV.DIN963-4.8 BICR M 3X 7 (PARA CIERRE BOBINA)	VIS DIN963-4.8 BICR M 3X 7 (POUR FERMETURE BOBINE)
41	300665	COIL SPRING (FOR COIL LOCK)	MUELLE BOBINA (PARA CIERRE BOBINA)	RESSORT BOBINE (POUR FERMETURE BOBINE)
42	150698	FLEXIBLE PIN DIN1481 D3X10 (FOR COIL LOCK)	PASADOR ELASTICO DIN1481 D3X10 (PARA CIERRE BOBINA)	GOUJON ELASTIQUE DIN1481 D3X10 (POUR FERMETURE BOBINE)
43	276402	SLIDING BLOCKER (FOR COIL LOCK)	BLOQUEADOR DESLIZANTE (PARA CIERRE BOBINA)	BLOQUEUR COULISSANT (POUR FERMETURE BOBINE)
44	175224	RECTIFIER BRIDGE FB1010 (FOR COIL LOCK)	PUENTE RECTIFIC.FAGOR FB1010 (PARA CIERRE BOBINA)	PONT RECTIFIEUR FB1010 (POUR FERMETURE BOBINE)
45	199240	BICR.SCREW DIN963-4.8 M4X30 (FOR COIL LOCK)	TOR.AV.DIN963-4.8 BICR M 4X30 (PARA CIERRE BOBINA)	VIS T/FRAIS.DIN963-4 BIC.M4X30 (POUR FERMETURE BOBINE)
46	300467	CYLINDER SEPARATOR SS10-4 CPVC (FOR COIL LOCK)	SEPARADOR CILINDR.SS10-4 CPVC (PARA CIERRE BOBINA)	SEPARATEUR CYLINDR.SS10-4 CPVC (POUR FERMETURE BOBINE)
47	149476	BICR.WASHER B DIN125-ST 4,3 (FOR COIL LOCK)	ARAN.B DIN125-ST BICR. 4,3 (PARA CIERRE BOBINA)	RONDELLE B DIN125-ST BICR.4,3 (POUR FERMETURE BOBINE)
48	150185	BICR.HEX.NUT DIN934-8 M4 (FOR COIL LOCK)	TUER.EX.DIN934-8 BICR.M 4 (PARA CIERRE BOBINA)	ECROU HEX.DIN934-8 BICR.M4 (POUR FERMETURE BOBINE)

info@zipnasklade.ru
8(800)300-69-51

Nº	REF.	DENOMINATION	DENOMINACIÓN	DÉNOMINATION
49	282996	DOOR RING	ARO ESCOTILLA	BAGUE HUBLOT
50	199323	DOOR LOCK PIECE	PIEZA CIERRE SEGURIDAD	PIECE FERMETURE HUBLOT
51	144279	ALLEN SCREW DIN 912 M-5X15	TOR.ALLDIN912-8.8 BICR.M 5X 15	VIS ALLEN DIN 912 M-5X15
52	174482	SELFOIL SLEEVE B11B22-28-25/33	COJ. SELFOIL B11B22-28-25/33-4	FRETTE SELFOIL B11B22-28-25/33
53	277285	HINGE	BISAGRA	CHARNIERE
54	175752	ALLEN SCREW DIN 912 M-20X60	TOR.ALLDIN912-8.8 BICR.M20X 60	VIS ALLEN DIN 912 M-20X60
55	259952	HINGE	BISAGRA	CHARNIERE
57	176776	CONICAL END FIG. 26 D38	TOPE CONICO FIG.26 D38	ARRET CONIQUE FIG. 26 D38
58	175778	ALLEN BUMP DIN 916 M-8X15	ESP.ALL.DIN916-10.9 M 8X15	GOUJON ALLEN DIN 916 M-8X15
59	206995	DOOR BOLT	BULON ESCOTILLA	BOULON HUBLOT
60	174524	FLEXIBLE RING E-22 DIN 471	ANILLO ELASTICO E-22 DIN 471	BAGUE ELASTIQUE E-22 DIN 471
61	276857	MICROSWITCH BRACKET	SOPORTE MICRORRUPTOR	SUPPORT MICRORRUPTEUR
62	146043	BIC CYL SCREW DIN84-4,8 M3X16	TOR.CIL.DIN84-4.8 BICR.M 3X16	VIS CYL DIN84-4,8 BICR.M3X16
63	276907	MICROSWITCH ACTIVATOR BOLT	PERNO ACCIONADOR MICRORRUPTOR	BOULON ACCIONATEUR MICRORRUPT.
64	198069	SPRING	MUELLE COMPENSADOR	RESSORT
65	149922	INOX HEX. NUT DIN 934 M-4	TUER.EX.DIN934 INOX A2-70 M 4	ECROU HEX. INOX DIN 934 M-4
66	276873	MICROSWITCH DRIVE	ACCIONADOR MICRORRUPTOR	ACTIONNEMENT MICRORRUPTEUR
67	276840	GUIDE SLEEVE	CASQUILLO GUIA	FRETTE GUIDE
68	276923	PROTECTION PLATE	TAPA PROTECCION	COUVERCLE PROTECTION
69	144832	INOX.HEX.SCREW DIN 933 M-4X10	TOR.EX.DIN933INOX A2-70 M 4X10	VIS HEX INOX. DIN 933 M-4X10
70	149328	INOX A2 WASHER DIN 125 4,3	ARAN. DIN125 INOX A2 4,3	RONDELLE INOX A2 DIN 125 4,3
71	145664	INOX FLAT SCREW DIN85 M 4X8	TOR.PLA.DIN85 INOX A2-70 M4X 8	VIS PLAT INOX DIN85 M 4X8
72	276899	WIRE PROTECTION HOSE	TUBO PROTECCION CABLES	TUBE PROTECTION CABLES
73	200212	DOOR END-PIECE	TOPE ESCOTILLA	ARRET HUBLOT
74	244202 *	DOOR RING	ARO ESCOTILLA	BAGUE HUBLOT
75	174912	GLASS SPYHOLE D519X5	MIRILLA CRISTAL D519+-1,5X5	VITRE D519X5
76	174920	NEOPRENE A PROFILE L.1635 MM	PERFIL A EPDM BLANCO 1635MM.	PROFILE NEOPRENE A L.1635 MM
77	244210	OUTER RING	ARO EXTERIOR	BAGUE EXTERIEUR
78	145649	INOX FLAT SCREW DIN85 M 4X10	TOR.PLA.DIN85 INOX A2-70 M4X10	VIS PLAT INOX DIN85 M-4X10 A2
79	116129	SCREW GASKET	JUNTA TORNILLO	JOINT VIS

info@zipnasklade.ru
8(800)500-69-51

Nº	REF.	DENOMINATION	DENOMINACIÓN	DÉNOMINATION
80	150151	INOX BLIND NUT DIN 1587 M-4	TUERCA CIE.INOX LAR.DIN1587M 4	ECROU AVEUGLE INOX DIN 1587 M4
81	176008	DOOR GASKET	JUNTA ESCOTILLA	JOINT HUBLOT
82	216820	DOOR GASKET CLIP	GRAPA JUNTA ESCOTILLA	CLIP JOINT HUBLOT
83	149302	INOX.A2 WASHER DIN 125 13	ARAN. DIN125 INOX A2 13	RONDELLE INOX.A2 DIN 125 13
84	149948	INOX. HEX. NUT DIN 934 M-12	TUER.EX.DIN934 INOX A2-70 M12	ECROU HEX. INOX. DIN 934 M-12
85	276543	LOCKING BASE	BASE CIERRE	BASE FERMETURE
86	302331	ALLEN SCREW DIN912-8.8 BICR.	TOR.ALLDIN912-8.8 BICR.M 6X 35	VIS ALLDIN912-8.8 BICR.M6X35
87	279810	LOCKING BOX COVER	TAPETA CAJA CIERRE	COUVERCLE BOITE FERMETURE
88	146035	BICR CYL SCREW DIN84 M-3X10	TOR.CIL.DIN84-4.8 BICR.M 3X10	VIS CYL BICR DIN84-4.8 M 3X10

info@zipnasklade.ru
8(800)500-69-51

*	244194	COMPLETE DOOR	ESCOTILLA COMPLETA	HUBLOT COMPLET

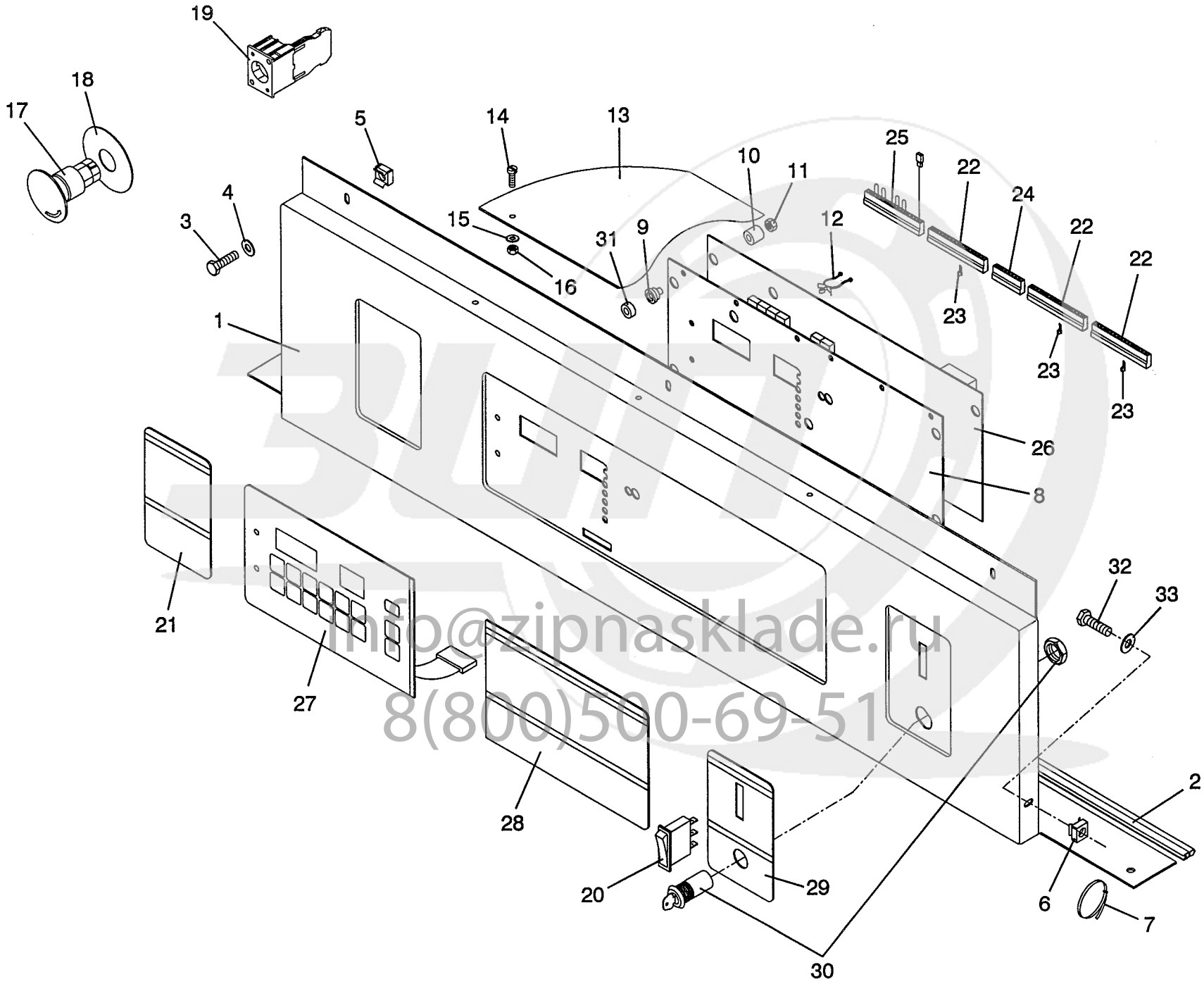

info@zipnasklade.ru
8(800)500-69-51

HS-3040 6

U-15135

Nº	REF.	DENOMINATION	DENOMINACIÓN	DÉNOMINATION
1	280883	CONTROL PANEL	PANEL DE MANDOS	PANNEAU COMMANDE
2	278705	CONTROL PANEL PROFILE	PERFIL PANEL DE MANDOS	PROFILE PANNEAU COMMANDES
3	144964	INOX HEX SCREW DIN 933 M-8X15	TOR.EX.DIN933INOX A2-70 M 8X16	VIS HEX INOX DIN 933 M-8X15
4	149351	INOX A2 WASHER DIN 125 8,4	ARAN. DIN125 INOX A2 8,4	RONDELLE INOX A2 DIN 125 8,4
5	174532	CAGED NUT M-8 R-310011-6	TUER.ENJ.M8 1,8-3,2 R.310011-6	ECROU ENCAGE M-8 R-310011-6
6	165019	CAGED NUT M-6 0,5-1,5	TUER.ENJ.M6 0,5-1,5 R.310007-9	ECROU PRESIONER M-6 0,5-1,5
7	140525	CLAMP 2244-0	BRIDA UNEX 2244-0	BRIDE 2244-0
8	278317	PROCESSOR ISOLATOR	AISLANTE MICROPROCESADOR	ISOLANT MICROPROCESSEUR
9	277392	PLATE-CONTROL SEPARATOR	SEPARADOR PANEL-PLACA	SEPARATEUR TABLEAU-PLAQUE
10	277400	NUT-PLATE SEPARATOR	SEPARADOR PLACA-TUERCA	SEPARATEUR PLAQUE-ECROU
11	150185	BICR.HEX.NUT DIN934-8 M4	TUER.EX.DIN934-8 BICR.M 4	ECROU HEX.DIN934-8 BICR.M4
12	199893	CLAMP STL-450-3-01	ABRAZADERA STL-450-3-01	BRIDE STL-450-3-01
13	258277	PROCESSOR BOARD LID	TAPA PLACA MICROPROCESADOR	COUVERCLE PLAQ.MICROPROCESSEUR
14	145649	INOX FLAT SCREW DIN85 M 4X10	TOR.PLA.DIN85 INOX A2-70 M4X10	VIS PLAT INOX DIN85 M-4X10 A2
15	219758	WASHER 12X4X1,5	ARANDELA 12X4X1,5	RONDELLE 12X4X1,5
16	132043	SELFBLOCKING NUT DIN985 M 4	TUER.AUTOBL.DIN985-8 BICR.M 4	ECROU AUTOBLOCANT DIN985 M 4
17	192310	MUSHROOM PUSH-BUTTON	PUL.HONGO ENCL.3SB10 (341529)	PULSATEUR TYPE COUP DE POING
18	192294	YELLOW RING	ARO AMARILLO	BAGUE JAUNE
19	197343	CONNECTION ELEMENT 3SB13 20-0A	ELEMENTO CONEXION 3SB13 20-0A	ELEMENT CONNEXION 3SB13 20-0A
20	300780	SWITCH 1WIXII/3359 WHITE	INTER.PILOTO 1WIXII/3359 BLANC	INTERRUPTEUR 1WIXII/3359 BLANC
21	301069	ENGLISH SAFETY INSTR.PLATE	PLACA INSTR.SEGURIDAD IN.	PLAQUE INSTR.SECURITE ANGLAIS
	301077	SPANISH SAFETY INSTR.PLATE	PLACA INSTR.SEGURIDAD ES.	PLAQUE INSTR.SECURITE ESPAGNOL
	301085	FRENCH SAFETY INSTR.PLATE	PLACA INSTR.SEGURIDAD FR.	PLAQUE INSTR.SECURITE FRANCAIS
	301093	GERMAN SAFETY INSTR.PLATE	PLACA INSTR.SEGURIDAD AL.	PLAQUE INSTR.SECURITE ALLEMAND
	301101	ITALIAN SAFETY INSTR.PLATE	PLACA INSTR.SEGURIDAD IT.	PLAQUE INSTR.SECURITE ITALIEN
	301119	PORTUGUESE SAFETY INSTR.PLATE	PLACA INSTR.SEGURIDAD PO.	PLAQUE INST.SECURITE PORTUGAIS
	301127	DUTCH SAFETY INSTR.PLATE	PLACA INSTR.SEGURIDAD HO.	PLAQUE INSTR.SECURITE HOLLAND.
	301135	DANISH SAFETY INSTR.PLATE	PLACA INSTR.SEGURIDAD DA.	PLAQUE INSTR.SAFETY DANOIS
	301143	FINNISH SAFETY INSTR.PLATE	PLACA INSTR.SEGURIDAD FI.	PLAQUE INSTR.SECURITE FINLAND.
	301150	NORWEGIAN SAFETY INSTR.PLATE	PLACA INSTR.SEGURIDAD NO.	PLAQUE INST.SECURITE NORVÉGIEN

info@zipnasklade.ru
8(800)500-69-51

Nº	REF.	DENOMINATION	DENOMINACIÓN	DÉNOMINATION
	301168	SWEDISH SAFETY INSTR.PLATE	PLACA INSTR.SEGURIDAD SU.	PLAQUE INSTR.SECURITE SUÉDOIS
	301176	GREEK SAFETY INSTR.PLATE	PLACA INSTR.SEGURIDAD GR.	PLAQUE INSTR.SECURITE GREC
	301184	JAPENESE SAFETY INSTR.PLATE	PLACA INSTR.SEGURIDAD JA.	PLAQUE INSTR.SECURITE JAPONAIS
22	197301	PROTECTOR AMP-UNYT 1-640029-6	PROTECTOR AMP-UNYT 1-640029-6	PROTECTEUR AMP-UNYT 1-640029-6
23	197426	POLARIZATION AMP 640180-1	POSICIONADOR AMP 640180-1	POLARIZATION AMP 640180-1
24	199810	PROTECTOR AMP-UNYT 640029-8	PROTECTOR AMP-UNYT 640029-8	PROTECTEUR AMP-UNYT 640029-8
25	290445	IDENTIFICATION PLUG	CONECTORA IDENTIFICACION	CONNECTEUR IDENTIFICATION
26	300806	PROCESSOR BOARD PM	PLACA MICROPROCESADOR PM	PLAQUE MICROPROCESSEUR PM
	303347	EPROM FOR WASHER PM3 VER05	EPROM LAVADORAS PM3 VER05	EPROM POUR MACH.A LAVER PM3 V4
	187195	RAM ZERO POWER MK48Z08-10	RAM ZERO POWER MK48Z08-10	RAM ZERO POWER MK48Z08-10
	187203	INPUT OPTOISOLATOR 4N26	OPTOACOPLADOR ENTRADA 4N26	OPTOISOLATOR ENTREE 4N26
	187211	OUTPUT OPTOISOLATOR S21MD4V	OPTOACOPLADOR SALIDA	OPTOISOLATOR SORTIE S21MD4V
	188003	DISPLAY TDSR 5160	DISPLAY TDSR 5160	DISPLAY TDSR 5160
27	300673	WASHER KEYBOARD PM	TECLADO LAVADORA PM	CLAVIER LAVEUSE PM
28	301440	ENGLISH OPERATION INSTR.PLATE	PLACA INSTR.FUNCION. IN.	PLAQUE INSTR.FONCTION ANGLAIS
	301457	SPANISH OPERATION INSTR.PLATE	PLACA INSTR.FUNCION. ES.	PLAQUE INSTR.FONCTION ESPAGNOL
	301465	FRENCH OPERATION INSTR.PLATE	PLACA INSTR.FUNCION. FR.	PLAQUE INSTR.FONCTION FRANCAIS
	301473	GERMAN OPERATION INSTR.PLATE	PLACA INSTR.FUNCION. AL.	PLAQUE INSTR.FONCTION ALLEMAND
	301481	ITALIAN OPERATION INSTR.PLATE	PLACA INSTR.FUNCION. IT.	PLAQUE INSTR.FONCTION ITALIEN
	301499	PORTUGUESE OPERATION INST.PLAT	PLACA INSTR.FUNCION. PO.	PLAQUE INST.FONCTION PORTUGAIS
	301507	DUTCH OPERATION INSTR.PLATE	PLACA INSTR.FUNCION. HO.	PLAQUE INSTR.FONCTION HOLLAND.
	301515	DANISH OPERATION INSTR.PLATE	PLACA INSTR.FUNCION. DA.	PLAQUE INSTR.FONCTION DANOIS
	301523	FINNISH OPERATION INSTR.PLATE	PLACA INSTR.FUNCION. FI.	PLAQUE INSTR.FONCTION FINLAND.
	301531	NORWEGIAN OPERATION INSTR.PLAT	PLACA INSTR.FUNCION. NO.	PLAQUE INSTR.FONCTION NORVÉG.
	301549	SWEDISH OPERATION INSTR.PLATE	PLACA INSTR.FUNCION. SU.	PLAQUE INSTR.FONCTION SUÉDOIS
	301556	GREEK OPERATION INSTR.PLATE	PLACA INSTR.FUNCION. GR.	PLAQUE INSTR.FONCTION GREC
	301564	JAPENESE OPERATION INSTR.PLATE	PLACA INSTR.FUNCION. JA.	PLAQUE INSTR.FONCTION JAPONAIS
29	301994	GENERAL CONTROL PLATE	PLACA MANDOS GENERALES	PLAQUE COMMANDES GENERALES
30	256230	FUNCTION SWITCH	CONMUTADOR FUNCIONES	COMMUTATEUR FONCTIONS
31	279901	SEPARATOR WASHER	ARANDELA SEPARADOR	RONDELLE SEPARATEUR

info@zipnasklade.ru
8(800)500-69-51

Nº	REF.	DENOMINATION	DENOMINACIÓN	DÉNOMINATION
32	146233	BICR.HEX SCREW DIN933-8 M6X15	TOR.EX.DIN933-8.8 BICR.M 6X 15	VIS HEX DIN933-8.8 BICR.M6X15
33	149526	BICR.WASHER B DIN125-ST 6,4	ARAN.B DIN125-ST BICR. 6,4	RONDELLE B DIN125-ST BICR.6,4

info@zipnasklade.ru
8(800)500-69-51

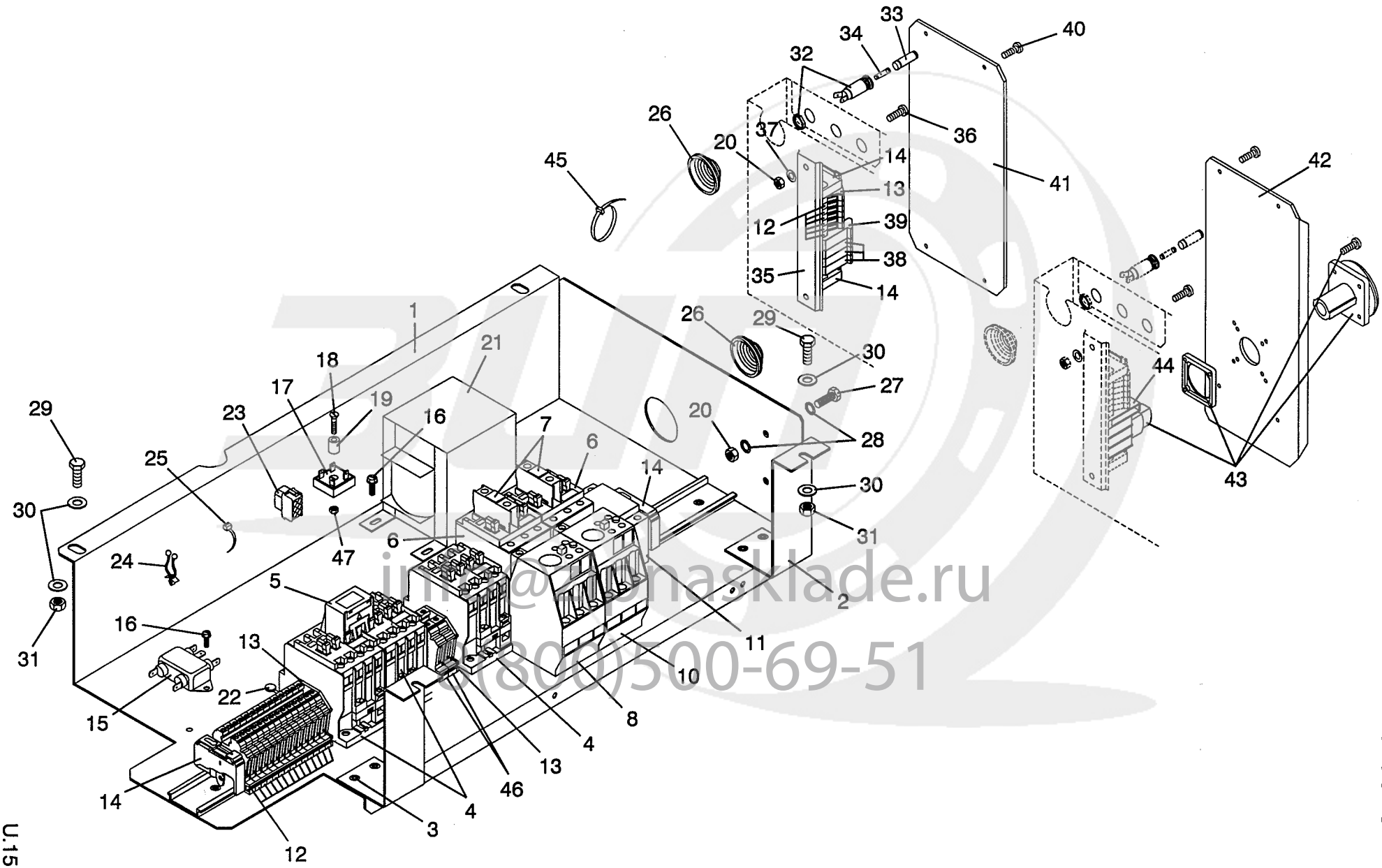

info@pnasklade.ru
8(800)500-69-51

Nº	REF.	DENOMINATION	DENOMINACIÓN	DÉNOMINATION
1	272344	INSTALLATION BOX PLATE	PLACA CAJA INSTALACION	PLAQUE BOITE INSTALLATION
2	277210	INSTALLATION BOX BRACKET	SOPORTE CAJA INSTALACION	SUPPORT BOITE INSTALLATION
3	151878	RIVET POP TLP/D/636/BS4,8X 9,1	REMA.POP TLP/D/636/BS 4,8X 9,1	RIVET TLP/D/636/BS 4,8X 9,1
4	193433	CONTACTOR 3TF31 01-OAN2	CONTACTOR 3TF31 01-OAN2	CONTACTEUR 3TF31 01-OAN2
	194050	COIL 3TY7 403-OAN2	BOBINA 3TY7 403-OAN2	BOBINE 3TY7 403-OAN2
5	196592	CONTACT BLOCK 3TX4 091-1A	BLOQUEO 3TX4 091-1A	BLOC CONTACT 3TX4 091-1A
6	195339	CONTACTOR 3TF33 00-OAN2	CONTACTOR 3TF33 00-OAN2	CONTACTEUR 3TF33 00-OAN2
	194050	COIL 3TY7 403-OAN2	BOBINA 3TY7 403-OAN2	BOBINE 3TY7 403-OAN2
7	193466	AUX. CONTACT BLOCK 3TX4001-2A	BLOQUE CONTACTO AUX.3TX4001-2A	BLOC CONTACT AUX. 3TX4001-2A
8	183418	THERMIC RELAY 3UA52 00-1J (FOR 380,415 AND 440V)	RELE TERM.3UA52 00-1J 6,3-10 A (PARA 380,415 Y 440V)	RELAIS THERMIQUE 3UA52 00-1J (POUR 380,415 ET 440V)
	136515	THERMIC RELAY 3UA5200-2A (FOR 200,208,220 AND 240V)	RELE TERM.3UA52 00-2A 10-16A (PARA 200,208,220 Y 240V)	RELAIS THERMIQUE 3UA5200-2A (POUR 200,208,220 ET 240V)
10	136515	THERMIC RELAY 3UA5200-2A (FOR 380,415 AND 440V)	RELE TERM.3UA52 00-2A 10-16A (PARA 380,415 Y 440V)	RELAIS THERMIQUE 3UA5200-2A (POUR 380,415 ET 440V)
	136523	THERMIC RELAY 3UA52 00-2C (FOR 200,208,220 AND 240V)	RELE TERM.3UA52 00-2C 16-25A (PARA 200,208,220 Y 240V)	RELAIS THERMIQUE 3UA52 00-2C (POUR 200,208,220 ET 240V)
11	138198	AUTOMAT. SWITCH 3VU13 00-1MK00 (FOR 380,415 AND 440V)	INTERRUPTOR AUT.3VU13 00-1MK00 (PARA 380,415 Y 440V)	INTERRUPTEUR AU.3VU13 00-1MK00 (POUR 380,415 ET 440V)
	175208	AUTOMAT.SWITCH 3VU13 00-1ML00 (FOR 200,208,220 AND 240V)	INTERRUPTOR AUT.3VU13 00-1ML00 (PARA 200,208,220 Y 240V)	INTERRUPTEUR AUT.3VU13 00-1ML0 (POUR 200,208,220 ET 240V)
12	155457	TERMINAL BC 4/6 R 638255	BORNA CIAMA BC 4/6 R 638255	BORNE BC 4/6 R 638255
13	155275	END COVER FC2 5/10	TAPA FIN.CIAMA FC2.5/10 635455	COUVERCLE FINAL FC2.5/10
14	142331	FIXING CLAMP	TOPE FIJAC.S/BORDES R.LEG39400	BRIDE FIXATION
15	199836	FILTER FRI FA-1Z	FILTRO DE RED RFI TIPO FA-1Z	FILTRE RFI FA-1Z
16	183400	CYL.PLATE SCREW ST-4 20 C/AL	TOR.CHAPA ST-4 20 C/AL.T25	VIS PLAQUE CYL.ST-4 20 C/AL
17	175224	RECTIFIER BRIDGE FB1010	PUENTE RECTIFIC.FAGOR FB1010	PONT RECTIFIEUR FB1010
18	199240	BICR.SCREW DIN963-4.8 M4X30	TOR.AV.DIN963-4.8 BICR M 4X30	VIS T/FRAIS.DIN963-4 BIC.M4X30
19	300467	CYLINDER SEPARATOR SS10-4 CPVC	SEPARADOR CILINDR.SS10-4 CPVC	SEPARATEUR CYLINDR.SS10-4 CPVC
20	150177	BICR HEX NUT DIN934-8 M5	TUER.EX.DIN934-8 BICR.M 5	ECROU HEX DIN934-8 BIC.M5
21	196931	TRANSFORMER IP00 160 VA	TRANSFORMADOR IP00 160 VA	TRANSFORMATEUR IP00 160 VA
22	177709	VARISTOR SKVA14A420	VARISTOR SKVA14A420	VARISTEUR SKVA14A420
23	139444	PROTECTOR 1/480705-0	PROTECTOR 1/480705-0	PROTECTEUR 1/480705-0

info@zipnasklade.ru
8(800)500-69-51

Nº	REF.	DENOMINATION	DENOMINACIÓN	DÉNOMINATION
24	199893	CLAMP STL-450-3-01	ABRAZADERA STL-450-3-01	BRIDE STL-450-3-01
25	140434	CLAMP 2221	BRIDA UNEX 2221	BRIDE 2221
26	139683	CONE ECPC-6	CONO HIMEL ECPC-6	CONE ECPC-6
27	146290	BICR.HEX SCREW DIN933-8 M-5X20	TOR.EX.DIN933-8.8 BICR.M 5X 20	VIS HEX BICR.DIN933-8.8 M-5X20
28	149724	BICR EXT.TOOT.WASH.DIN6798 M5	ARAN.DEN.EXTER.BICR.DIN6798M 5	RONDEL DEN.EX.BICR.DIN6798 M5
29	146233	BICR.HEX SCREW DIN933-8 M6X15	TOR.EX.DIN933-8.8 BICR.M 6X 15	VIS HEX DIN933-8.8 BICR.M6X15
30	149526	BICR.WASHER B DIN125-ST 6,4	ARAN.B DIN125-ST BICR. 6,4	RONDELLE B DIN125-ST BICR.6,4
31	150227	BICR HEX NUT DIN934-8 M6	TUER.EX.DIN934-8 BICR.M 6	ECROU HEX DIN934-8 BICR.M6
32	160119	FUSE HOLDER REF.FEC 031 1631	PORTAFUSIBLES REF.FEC.031.1631	PORTE-FUSIBLE REF.FEC 031 1631
33	192286	BAYONET HEAD (FOR FUSE 5X20)	CABEZA BAYONETA FEK.031.1611 (PARA CARTUCHO 5X20)	TETE BAYONETTE (POUR CARTOUCHE 5X20)
	137661	BAYONET HEAD (FOR FUSE 6X32)	CABEZA BAYONETA FEK.031.1613 (PARA CARTUCHO 6X32)	TETE BAYONETTE (POUR CARTOUCHE 6X32)
34	302612	FUSE FSD 0034.3987 1A (FOR FUSE 5X20)	CART.FUSIB.FSD 0034.3987 1 A (PARA CARTUCHO 5X20)	CARTOUCHE FUSIBLE FSD 0034 1A (POUR CARTOUCHE 5X20)
	182485	FUSE FST 0034.5225 1A (FOR FUSE 6X32)	CART.FUSIB.FST 0034.5225 1 A (PARA CARTUCHO 6X32)	CARTOUCHE FUS.FST 0034.5225 1A (POUR CARTOUCHE 6X32)
35	245571	CONTACTOR FIXING PROFILE	PERFIL FIJACION CONTACTORES	PROFILE FIXATION CONTACTEURS
36	146175	BICR CYL SCREW DIN84-4 M-5X10	TOR.CIL.DIN84-4.8 BICR.M 5X10	VIS CYL BICR DIN84-4.8.M-5X10
37	149534	BICR.WASHER B DIN125-ST 5,3	ARAN.B DIN125-ST BICR. 5,3	RONDELLE B BICR.DIN125-ST 5,3
38	163360	TERMINAL BC 25/35 630655 (WITHOUT SWITCH DISCONNECTOR)	BORNA CIAMA BC 25/35 630655 (SIN INTERRUPTOR SECCIONADOR)	BORNE BC 25/35 630655 (SANS INTERRUPTEUR SECTIONNER)
39	192245	TERMINAL BCT 25 632112 (WITHOUT SWITCH DISCONNECTOR)	BORNA CIAMA BCT 25 632112 (SIN INTERRUPTOR SECCIONADOR)	BORNE BCT 25 632112 (SANS INTERRUPTEUR SECTIONNER)
40	146084	BICR CYL SCREW DIN84 M 4X 10	TOR.CIL.DIN84-4.8 BICR.M 4X10	VIS CYL BICR DIN84-4.8 M 4X 10
41	283739	CURRENT INLET COVER (WITHOUT SWITCH DISCONNECTOR)	TAPA ENTRADA CORRIENTE (SIN INTERRUPTOR SECCIONADOR)	COUVERCLE ENTREE COURANT (SANS INTERRUPTEUR SECTIONNER)
42	277590	CURRENT INPUT COVER (WITH SWITCH DISCONNECTOR)	TAPA ENTRADA CORRIENTE (CON INTERRUPTOR SECCIONADOR)	COUVERCLE ENTRÉE DE COURANT (AVEC INTERRUPTEUR SECTIONNER)
43	300376	POWER SWITCH P1-32/V/SVB (WITH SWITCH DISCONNECTOR) (WITHOUT ELECTRIC HEATING)	INTERRUPT.GENERAL P1-32/V/SVB (CON INTERRUPTOR SECCIONADOR) (SIN CALEFACCION ELECTRICA)	INTERRUP.GRAL.P1-32/V/SVB (AVEC INTERRUPTEUR SECTIONNER) (SANS CHAUFAGE ELECTRIQUE)
44	300400	AUX.CONTACT. HI11.P1/P3Z (WITH SWITCH DISCONNECTOR)	CONTACTO AUXILIAR HI11-P1/P3Z (CON INTERRUPTOR SECCIONADOR)	CONTACT.AUX.HI11-P1/P3Z (AVEC INTERRUPTEUR SECTIONNER)
45	140525	CLAMP 2244-0	BRIDA UNEX 2244-0	BRIDE 2244-0

info@zipnasklade.ru
8(800)500-69-51

Nº	REF.	DENOMINATION	DENOMINACIÓN	DÉNOMINATION
46	155465	TERMINAL BC 10/16R 638455	BORNA CIAMA BC 10/16R 638455	BORNE BC 10/16R 638455
47	150185	BICR.HEX.NUT DIN934-8 M4	TUER.EX.DIN934-8 BICR.M 4	ECROU HEX.DIN934-8 BICR.M4

info@zipnasklade.ru
8(800)500-69-51

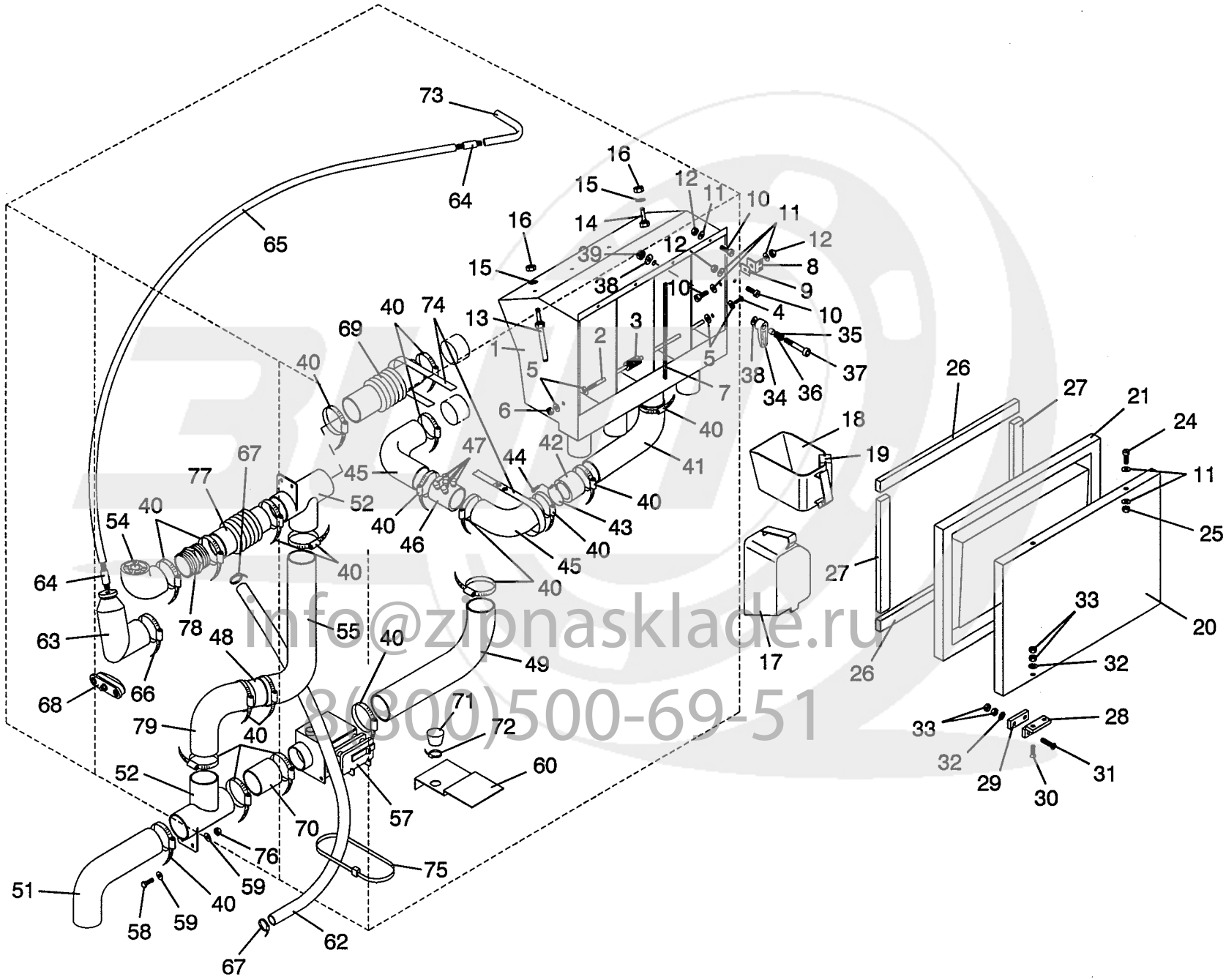

info@zipnasklade.ru
8(800)500-69-51

Nº	REF.	DENOMINATION	DENOMINACIÓN	DÉNOMINATION
1	256404	DISPENSER BOX SET (PIN AND PROFILES INCLUDES)	CONJUNTO DOSIFICADORES (INCLUYE VARILLA Y PERFILES)	ENSEMBLE BOITE BAC A PRODUITS BAGUETTEE ET PROFILES COMPRIS
2	256545	SOAP DISPENSER BAR	VARILLA DOSIFICADOR	BAGUETTE BAC A PRODUITS
3	271916	SOAP DISPENSER ROD PROTECTION	FUNDA VARILLA DOSIFICADOR	FOURREAU BAGUET.BAC A PRODUITS
4	144782	INOX HEX SCREW DIN933 M 5X15	TOR.EX.DIN933INOX A2-70 M 5X15	VIS HEX INOX DIN933 M 5X15
5	160838	WASHER 14X6X1,5	ARANDELA 14X6X1,5	RONDELLE 14X6X1,5
6	176826	SELF-BLOCKING NUT DIN 985 M-5	TUER.AUTOBL.DIN985-8 BICR.M 5	ECROU AUTOBLOCANT DIN 985 M-5
7	255547	SOAP DISPENSER PROFILE	PERFIL DOSIFICADOR	PROFILE BACS A PRODUITS
8	256370	SOAP DISPENSER FIXING	FIJACION DOSIFICADOR	FIXATION BAC A PRODUITS
9	256446	SOAP DISPENSER BRACKET PIECE	PIEZA SOPORTE DOSIFICADOR	PIECE SUPPORT BAC A PRODUITS
10	145631	INOX FLAT SCREW DIN85 M 4X15	TOR.PLA.DIN85 INOX A2-70 M4X16	VIS PLAT INOX DIN85 M 4X15 A2
11	149328	INOX A2 WASHER DIN 125 4,3	ARAN. DIN125 INOX A2 4,3	RONDELLE INOX A2 DIN 125 4,3
12	176792	INOX SELF-BLOCK.NUT DIN985 M 4	TUER.AUTOBL.DIN985 INOX M 4	ECROU AUTOBLOC.INOX DIN985 M 4
13	244467	DISPENSER HOSE	TUBO DOSIFICADOR	TUBE BAC A PRODUITS
14	242883	DISPENSER HOSE COUPLING	RACOR TUBO DOSIFICADOR	RACCORD TUBE BAC A PRODUITS
15	149393	BICR WASHER B DIN125-ST 15	ARAN.B DIN125-ST BICR.15	RONDELLE B BICR DIN125-ST 15
16	150250	BICR HEX.NUT DIN 934-8 M 14	TUER.EX.DIN934-8 BICR.M14	ECROU HEX.BICR DIN 934-8 M 14
17	244806	SOLID SOAP DISPENSER	DOSIFICADOR DETERGENTE SOLIDO	BAC A PRODUIT DETERGENT SOLIDE
18	244855	LIQUID SOAP DISPENSER (HOSE INCLUDED)	DOSIFICADOR DETERGENTE LIQUIDO (INCLUYE TUBO)	BAC A PRODUIT DETERG.LIQUIDE (TUBE COMPRIS)
19	234930	CHLORINE INTAKE HOSE	TUBO ASPIRACION CLORO	TUBE ASPIRATION CHLORE
20	244566	DISPENSERS LID	TAPA DOSIFICADORES	COUVERCLE BAC A PRODUITS
21	199984	SOAP DISPENSER COUNTERLID	CONTRATAPA DOSIFICADORES	CONTRECOUVERCLE BAC A PRODUITS
24	145649	INOX FLAT SCREW DIN85 M 4X10	TOR.PLA.DIN85 INOX A2-70 M4X10	VIS PLAT INOX DIN85 M-4X10 A2
25	149922	INOX HEX. NUT DIN 934 M-4	TUER.EX.DIN934 INOX A2-70 M 4	ECROU HEX. INOX DIN 934 M-4
26	256396 &	DISPENSER LID GASKET	JUNTA TAPA DOSIFICADOR	JOINT COUVERCLE BAC A PRODUITS
27	244608 &	DISPENSERS LID GASKET	JUNTA TAPA DOSIFICADORES	JOINT COUVERCLE BAC A PRODUITS
28	176800	HINGE RE 15186 CHROMED	BISAGRA PINET 72-7-3329 CROM.	CHARNIERE 15186 CHROM
29	244590	HINGE SUPPLEMENT	SUPLEMENTO BISAGRA	SUPPLEMENT CHARNIERE
30	176784	INOX SCREW DIN 963 M-3X10 A270	TOR.AV.DIN963 INOX A2-70 M3X10	VIS INOX DIN 963 M-3X10 A2-70
31	144758	INOX LENS HEAD S.DIN963 M 3X15	TOR.AV.DIN963 INOX A2-70 M3X16	VIS T/FRAI.INOX DIN963 M 3X15

info@zipnasklade.ru
8(800)500-69-51

Nº	REF.	DENOMINATION	DENOMINACIÓN	DÉNOMINATION
32	152132	INOX A2 WASHER DIN 125	ARAN. DIN125 INOX A2 3,2	RONDELLE INOX A2 DIN 125 3,2
33	149906	INOX. HEX. NUT DIN 934 M-3	TUER.EX.DIN934 INOX A2-70 M 3	ECROU HEX. INOX DIN934 M-3
34	187393	LOCKING HANDLE	MANECILLA CIERRE	POIGNEE FERMETURE
35	187401	LOCKING HANDLE SPRING	MUELLE MANECILLA CIERRE	RESSORT POIGNEE FERMETURE
36	257469	HANDLE HOSE	TUBO MANECILLA	TUBE POIGNEE
37	144436	ALLEN SCREW DIN912 M8X45	TOR.ALLDIN912-8.8 BICR.M 8X 45	VIS ALLEN DIN912 M8X45
38	149351	INOX A2 WASHER DIN 125 8,4	ARAN. DIN125 INOX A2 8,4	RONDELLE INOX A2 DIN 125 8,4
39	164285	SELFBLOCKING NUT DIN985 M-8	TUER.AUTOBL.DIN985-8 BICR.M 8	ECROU AUTOBLOCANT DIN985 M-8
40	132340	CLAMP 301510-0 D80-100	ABRAZADERA 80-100	BRIDE 301510-0 D80-100
41	299925	RUBBER ELBOW D73X500X140	CODO GOMA D73X470X140	COUDE GOMME D73X500X140
42	263962	STOPPER (MEMBRANE INCLUDED)	OBTURADOR (INCLUYE MEMBRANA)	OBTURATEUR (COMPRIS MEMBRANE)
43	263954	STOPPER MEMBRANE	MEMBRANA OBTURADOR	OBTURATEUR MEMBRANE
44	192203	INOX PLATE SCREW DIN7971 4X1/2	TOR.CHAPA INOX.DIN7971 4X1/2"	VIS PLAQUE INOX DIN7971 4X1/2"
45	299933	RUBBER ELBOW D73X210X90	CODO GOMA D73X210X90	COUDE GOMME D73X210X90
46	220061	SOAP INLET JOINTING	UNION ENTRADA DETERGENTE	UNION ENTREE DETERGENT
47	156679	CONICAL END-PIECE R-16 D10	TOPE CONICO REPRIMSA R-16 D10	BOUCHON CONIQUE R-16 D10
48	194217	OBTURATOR HOSE	TUBO OBTURADOR	TUBE OBTURATEUR
49	277087	DRAIN HOSE	TUBO DESAGUE	TUBE VIDANGE
51	163253	DRAIN OUTLET HOSE	TUBO SALIDA DESAGÜE	TUBE SORTIE VIDANGE
52	178152	UNION T	TE UNION	T UNION
54	300442	EXHAUST ELBOW	CODO SALIDA VAHOS	COUDE SORTIE VAPEURS
55	175075	DRAIN HOSE	CODO GOMA D73X530X215	TUBE VIDANGE
57	163212	DRAIN (NORMALLY OPEN) (NORMALLY OPEN)	DESAGUE(ABIERTO A F.DE CORR.) (NORMALMENTE ABIERTO)	VIDANGE (NORMALEMENT OUVERTE) (NORMALEMENT OUVERT)
	163238	DRAIN (NORMALLY CLOSED) (NORMALLY CLOSED) (FOR COIL LOCK)	DESAGUE(CERRADO A F.DE CORR.) (NORMALMENTE CERRADO) (PARA CIERRE BOBINA)	VIDANGE (NORMALEMENT FERMEE) (NORMALEMENT FERMÉ) (POUR FERMETURE BOBINE)
	159756	MOTOR AND GEAR-BOX RE. 453L (NORMALLY OPEN)	MOTOR-REDUCTOR0,24A.MTR453L18 (NORMALMENTE ABIERTO)	MOTEUR ET REDUCTEUR REF.453L (NORMALEMENT OUVERT)
	159764	MOTOR AND GEAR-BOX RE. 453R (NORMALLY CLOSED)	MOTOR-REDUCTOR 453R 0,24AMP. (NORMALMENTE CERRADO)	MOTEUR ET REDUCTEUR REF. 453R (NORMALEMENT FERMÉ)

info@zipnasklade.ru
8(800)500-69-51

Nº	REF.	DENOMINATION	DENOMINACIÓN	DÉNOMINATION
	159749	OPERATING SPRING RE. 308R (NORMALLY OPEN)	MUELLE ACCIONAMIENTO DS308R (NORMALMENTE ABIERTO)	RESSORT ACTIONNEMENT REF. 308R (NORMALEMENT OUVERT)
	159731	OPERATING SPRING RE.408L (NORMALLY CLOSED)	MUELLE ACCIONAMIENTO REF.408L (NORMALMENTE CERRADO)	RESSORT ACTIONNEMENT REF. 408L (NORMALEMENT FERMÉ)
	166561	DRAIN BODY RE. 711-SO 3"	CUERPO DESAGÜE REF.711-SO 3"	CORPS VIDANGE REF. 711-SO 3"
	166553	MOTOR FIXING PLATE REF. 304Z	PLACA FIJACION MOTOR REF.304Z	PLAQUE FIXATION MOTEUR 304Z
	166611	MOTOR FIXING PLATE SCREW	TORNILLO PLACA FIJAC.REF.306	VIS PLAQUE FIXATION MOTEUR
	166595	MOTOR PLATE FIXING SCREW 320C	TORNILLO FIJACION REF.320C	VIS FIXATION 320C
	166603	CYL PLATE SCREW DIN7971 8X2"	TOR.CHAPA CILI.DIN7971 8X2"	VIS PLAQUE CYL DIN7971 8X2"
	166587	OPERATING SHAFT REF. 713 (NORMALLY OPEN)	EJE ACCIONAMIENTO REF.713 (NORMALMENTE ABIERTO)	AXE ACTIONNEMENT REF. 713 (NORMALEMENT OUVERT)
	166579	OPERATING SHAFT 813C (NORMALLY CLOSED)	EJE ACCIONAMIENTO REF.813C (NORMALMENTE CERRADO)	AXE ACTIONNEMENT 813C (NORMALEMENT FERMÉ)
	166629	OPERATIN SHAFT WASHER 823	ARANDELA EJE ACCIONAM. REF.823	RONDELLE AXE ACTIONNEMENT 823
	166637	MANUAL LEVER REF. 601 (NORMALLY CLOSED)	PALANCA MANUAL REF.601 (NORMALMENTE CERRADO)	LEVIER MANUEL REF. 601 (NORMALEMENT FERMÉ)
58	146316	BICR.HEX SCREW DIN933-8 M-6X20	TOR.EX.DIN933-8.8 BICR.M 6X 20	VIX HEX BICR.DIN933-8.8 M-6X20
59	115733	WASHER 16X7X3	ARANDELA 16X7X3	RONDELLE 16X7X3
60	212795	DRAIN PROTECTION	PROTECCION DESAGÜE	PROTECTION VIDANGE
62	294793	BEARING BOX DRAIN HOSE	TUBO DESAGÜE CAJA COJINETES	TUBE VIDANGE BOITE ROULEMENTS
63	120964	PRESSURE SWITCH INTAKE BODY	CUERPO TOMA PRESOSTATO	CORPS PRISE PRESSOSTAT
64	120956	LEVEL PRESSURE-SWITCH INTAKE	TOMA PRESOSTATO NIVEL	PRISE PRESSOSTAT NIVEAU
65	283523 @	PRESSOSTAT HOSE	TUBO PRESOSTATO	TUBE PRESSOSTAT
66	132290	CLAMP 301508-9 D50-70	ABRAZADERA 50- 70	BRIDE 301508-9 D50-70
67	156109	CLAMP 301503-8 D16-25	ABRAZADERA 16- 27	BRIDE 301503-8 D16-25
68	121962	HEATER INLET LID	CIERRE ENTRADA CALEFACTOR	FERMETURE ENTREE RESISTANCE
69	299958	VAPOUR OUTLET JOINING	UNION SALIDA VAHOS	UNION SORTIE VAPEURS
70	277053	DRAIN JOINTING HOSE	TUBO UNION DESAGUE	TUBE UNION VIDANGE
71	135004	CONICAL END-PIECE REPRIMSA R16	TOPE CONICO REPRIMSA R-16 D30	ARRET CONIQUE REPRIMSA R16 D30
72	149609	CLAMP 301526-5 D25-40	ABRAZADERA 25- 40	BRIDE 301526-5 D25-40
73	279588	AIR CONDUCTION HOSE	TUBO CONDUCCION AIRE	TUBE CONDUITE AIR
74	316901	CLAMP	BRIDA	BRIDE

info@zipnasklade.ru
8(800)500-69-51

Nº	REF.	DENOMINATION	DENOMINACIÓN	DÉNOMINATION
75	140509	CLAMP 2273-0	BRIDA UNEX 2273-0	BRIDE 2273-0
76	150227	BICR HEX NUT DIN934-8 M6	TUER.EX.DIN934-8 BICR.M 6	ECROU HEX DIN934-8 BICR.M6
77	293324	VAPOUR OUTLET JOINING	UNION SALIDA VAHOS	UNION SORTIE VAPEURS
78	303107	DOUBLE THREAD BUTTRESS 2-1/2"	MACHON DOBLE ROSCA 2-1/2" PVC	PILIER DOUBLE FILET 2-1/2" PVC
79	272724	DRAIN HOSE	TUBO SALIDA DESAGÜE	TUBE SORTIE VIDANGE

info@zipnasklade.ru
8(800)500-69-51

&	131888	1 METER 15X20 PROFILE	1 METRO PERFIL 15X20	1 METRE PROFILE 15X20
@	128199	1 METER RUBBER HOSE D 9X 5	1 METRO TUBO GOMA D 9X 5	1 METRE TUBE GOMME D 9X 5

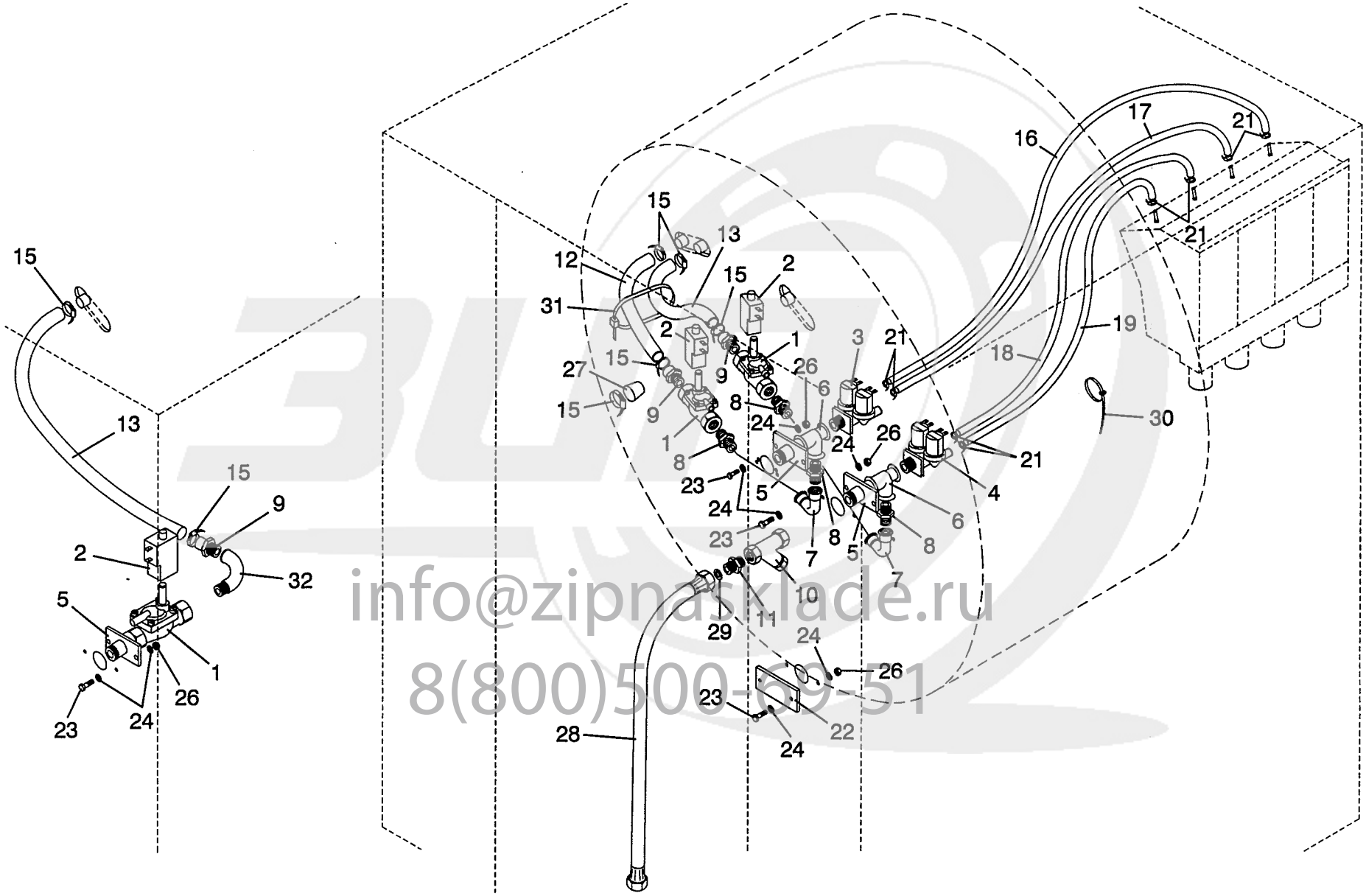

info@zipnasklade.ru
8(800)500-69-51

U-15138

Nº	REF.	DENOMINATION	DENOMINACIÓN	DÉNOMINATION
1	149591	VALVE BODY EVSI-25 32U7125	CUERPO VAL.EVSI-25 32U7125 WBD	CORPS VANNE EVSI-25 32U7125
	104067	SPARE PARTS KIT EVSI-25 WBD	KIT REPUES.EVSI-25 WBD 32U1075	KIT RECHANGES EVSI-25 WBD
2	100826	VALVE COIL 42N7501 220V 50HZ (FOR 50HZ)	BOBINA VAL.42N7501 220V 50HZ (PARA 50 HZ)	BOBINE VANNE 42N7501 220V 50HZ (POUR 50 HZ)
	100834	VALVE COIL 42N7523 220V 60HZ (FOR 60HZ)	BOBINA VAL.42N7523 220V 60HZ (PARA 60 HZ)	BOBINE VANNE 42N7523 220V 60HZ (POUR 60 HZ)
3	256503	TWO TRACK ELECTROVALVE	ELECTROVALVULA DOS VIAS	ELECTROVANNE DEUX VOIES
	192054	ELECT.SERIES 300 COIL 220/240V	BOBINA ELEC.SERIE 300 220/240V	BOBINE ELEC.SERIE 300 220/240V
	300194	YELLOW CASE 30053	ESTUCHE AMARILLO 30053	BOITE JAUNE 30053
	300202	INTEGRAL GUIDE-MEMBRANE 30696	MEMBRANA-GUIA INTEGRAL 30696	MEMBRANE-GUIDE INTEGRALE 30696
4	129379	DOUBLE ELECTROVALVE 349A 180º	ELECTROV.DOBLE 349-A 180º	ELECTROVANNE DOUBLE 349A 180º
	192054	ELECT.SERIES 300 COIL 220/240V	BOBINA ELEC.SERIE 300 220/240V	BOBINE ELEC.SERIE 300 220/240V
	300194	YELLOW CASE 30053	ESTUCHE AMARILLO 30053	BOITE JAUNE 30053
	300202	INTEGRAL GUIDE-MEMBRANE 30696	MEMBRANA-GUIA INTEGRAL 30696	MEMBRANE-GUIDE INTEGRALE 30696
5	214502	ELECTROVALVE BRACKET	SOPORTE ELECTROVALVULA	SUPPORT ELECTROVANNE
6	128769	T FIG 130 1"-1"-3/4" GALV	FIGURA 130RED.DE 1-1-3/4"GALV.	T FIG 130 1"-1"-3/4" GALV
7	129361	FIG 2 1" GALV	FIGURA 2 DE 1" GALV.	FIG 2 1" GALV
8	129791	FIG 280 1" GALV	FIGURA 280 DE 1" GALV.	FIG 280 1" GALV
9	166793	WATER INLET NUT	TUERCA ENTRADA AGUA	ECROU ENTREE EAU
10	133744	THREADED BRASS FILTER 1"	FILTRO LATON FLT ROSC. 1" 0,5	FILTRE FILETE LAITON 1"
11	216382	WATER INLET SLEEVE	MANGUITO ENTRADA AGUA	MANCHON ENTREE EAU
12	299750	WATER INLET HOSE	TUBO ENTRADA AGUA	TUBE ENTREE EAU
13	244913	WATER INLET HOSE	TUBO ENTRADA AGUA	TUBE ENTREE EAU
15	149609	CLAMP 301526-5 D25-40	ABRAZADERA 25- 40	BRIDE 301526-5 D25-40
16	163584 &	WATER INLET HOSE	TUBO ENTRADA AGUA	TUBE ENTREE EAU
17	214395 &	WATER INLET HOSE	TUBO ENTRADA AGUA	TUBE ENTREE EAU
18	117465 &	WATER INLET HOSE	TUBO ENTRADA AGUA	TUBE ENTREE EAU
19	116632	WATER INLET HOSE	TUBO ENTRADA AGUA	TUBE ENTREE EAU
21	155150	CLAMP 301502-0 D12-20	ABRAZADERA 8- 16	BRIDE 301502-0 D12-20
22	122713	WATER INLET COVER	TAPA ENTRADA AGUA	COUVERCLE ENTREE EAU
23	146233	BICR.HEX SCREW DIN933-8 M6X15	TOR.EX.DIN933-8.8 BICR.M 6X 15	VIS HEX DIN933-8.8 BICR.M6X15

info@zipnasklade.ru
8(800)500-69-51

Nº	REF.	DENOMINATION	DENOMINACIÓN	DÉNOMINATION
24	149526	BICR.WASHER B DIN125-ST 6,4	ARAN.B DIN125-ST BICR. 6,4	RONDELLE B DIN125-ST BICR.6,4
26	150227	BICR HEX NUT DIN934-8 M6	TUER.EX.DIN934-8 BICR.M 6	ECROU HEX DIN934-8 BICR.M6
27	149617	CONICAL END PIECE R-16 D25	TOPE CONICO REPRIMSA R-16 D25	ARRET CONIQUE R-16 D25
28	164194	WATER INLET HOSE RACCORDS 1"	TUBO EPDM 1"X1500 C.RACORES	TUBE ENTREE EAU RACCORDS 1"
29	216408	GASKET	JUNTA D31XD20X2	JOINT
30	140525	CLAMP 2244-0	BRIDA UNEX 2244-0	BRIDE 2244-0
31	140533	CLAMP 2271-0	BRIDA UNEX 2271-0	BRIDE 2271-0
		THIRD WATER INLET KITS	KITS TERCERA ENTRADA AGUA	KITS TROISIEME ENTREE EAU
	797951	THIRD WATER INLET KIT 50HZ	KIT TERCERA ENTRADA AGUA 50HZ.	KIT TROISIEME ENTREE EAU 50HZ
	797969	THIRD WATER INLET KIT 60HZ	KIT TERCERA ENTRADA AGUA 60HZ.	KIT TROISIEME ENTREE EAU 60HZ
&	128215	1 METER HOSE EPDM D 9X17	1 METRO TUBO EPDM D 9X17	1 METRE TUBE EPDM D 9X17

info@zipnasklade.ru
8(800)500-69-51

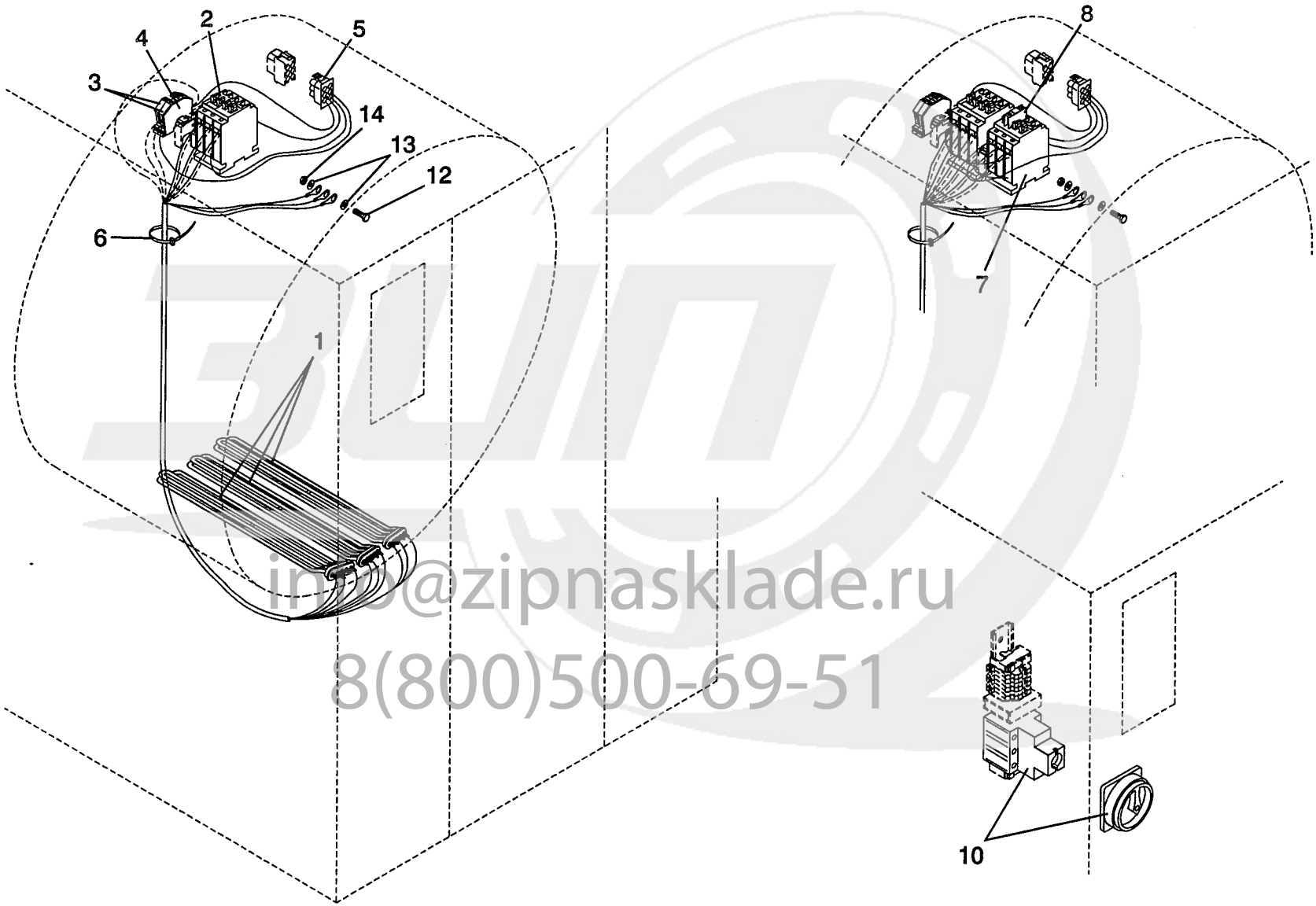

info@zipnasklade.ru
8(800)500-69-51

HS-3040

10

U.15139

Nº	REF.	DENOMINATION	DENOMINACIÓN	DÉNOMINATION
		ELECTRIC HEATING KITS	KITS CALEFACCIÓN ELÉCTRICA	KITS CHAUFFAGE ELECTRIQUE
		(WITH SWITCH DISCONNECTOR)	(CON INTERRUPTOR SECCIONADOR)	(AVEC INTERRUPTEUR SECTIONNER)
	797910	KIT E.H.FOR 200-208-220V	KIT CAL.ELEC.200-208-220V	KITY CH.E.POUR 200-208-220V
	797928	KIT E.H.FOR 240V	KIT CAL.ELEC.240V	KIT CH.E.POUR 240V
	797936	KIT E.H.FOR 380V	KIT CAL.ELEC.380V	KIT CH.E.POUR 380V
	797944	KIT E.H.FOR 415-440V	KIT CAL.ELEC.415-440V	KIT CH.E.POUR 415-440V
		ELECTRIC HEATING KITS	KITS CALEFACCIÓN ELÉCTRICA	KITS CHAUFFAGE ELECTRIQUE
		(WITHOUT SWITCH DISCONNECTOR)	(SIN INTERRUPTOR SECCIONADOR)	(SANS INTERRUPTEUR SECTIONNER)
	797878	KIT E.H.FOR 200-208-220V	KIT CAL.ELEC.200-208-220V	KIT CH.E.POUR 200-208-220V
	797886	KIT E.H.FOR 240V	KIT CAL.ELEC.240V	KIT CH.E.POUR 240V
	797894	KIT E.H.FOR 380V	KIT CAL.ELEC.380V	KIT CH.E.POUR 380V
	797902	KIT E.H.FOR 415-440V	KIT CAL.ELEC.415-440V	KIT CH.E.POUR 415-440V
1	307017	HEATER 220V 8000W (FOR 200,208,220 AND 380V)	CALEFACTOR 220V 8000W (PARA 200,208,220 Y 380V)	RESISTANCE 220V 8000W (POUR 200,208,220 ET 380V)
	307009	HEATER 240V 8000W (FOR 240-415-440V)	CALEFACTOR 240V 8000W (PARA 240-415-440V)	RESISTANCE 240V 8000W (POUR 240-415-440V)
2	300251	CONTACTOR 3TF34 11-OAN2	CONTACTOR 3TF34 11-OAN2	CONTACTEUR 3TF34 11-OAN2
	302810	COIL 37Y7 443-OAN2	BOBINA 3TY7 443-OAN2	BOBINE 3TY7 443-OAN2
3	162651	TERMINAL BC 16/25R 638555	BORNA CIAMA BC 16/25R 638555	BORNE BC 16/25R 638555
4	162669	END COVER FC 16/25	TAPA FIN.CIAMA FC 16/25 635655	COUVERCLE FINAL FC 16/25
5	139394	PROTECTOR 1/480704-0	PROTECTOR 1/480704-0	PROTECTEUR 1/480704-0
6	140525	CLAMP 2244-0	BRIDA UNEX 2244-0	BRIDE 2244-0
7	195339	CONTACTOR 3TF33 00-OAN2 (FOR 200,208,220 AND 240V)	CONTACTOR 3TF33 00-OAN2 (PARA 200,208,220 Y 240V)	CONTACTEUR 3TF33 00-OAN2 (POUR 200,208,220 ET 240V)
	194050	COIL 3TY7 403-OAN2	BOBINA 3TY7 403-OAN2	BOBINE 3TY7 403-OAN2
8	193466	AUX. CONTACT BLOCK 3TX4001-2A (FOR 200,208,220 AND 240V)	BLOQUE CONTACTO AUX.3TX4001-2A (PARA 200,208,220 Y 240V)	BLOC CONTACT AUX. 3TX4001-2A (POUR 200,208,220 ET 240V)
10	300392	PAQUET.SWITCH 3LD1 718-0TB53 (WITH SWITCH DISCONNECTOR)	INTERRUPT.GENERAL P3-100/V/SVB (CON INTERRUPTOR SECCIONADOR)	INTERRUP.PAQUET 3LD1 718-0TB53 (AVEC INTERRUPTEUR SECTIONNER)
12	146290	BICR.HEX SCREW DIN933-8 M-5X20	TOR.EX.DIN933-8.8 BICR.M 5X 20	VIS HEX BICR.DIN933-8.8 M-5X20

info@zipnasklade.ru
8(800)500-69-51

Nº	REF.	DENOMINATION	DENOMINACIÓN	DÉNOMINATION
13	149724	BICR EXT.TOOT.WASH.DIN6798 M5	ARAN.DEN.EXTER.BICR.DIN6798M 5	RONDEL DEN.EX.BICR.DIN6798 M5
14	150177	BICR HEX NUT DIN934-8 M5	TUER.EX.DIN934-8 BICR.M 5	ECROU HEX DIN934-8 BIC.M5

info@zipnasklade.ru
8(800)500-69-51

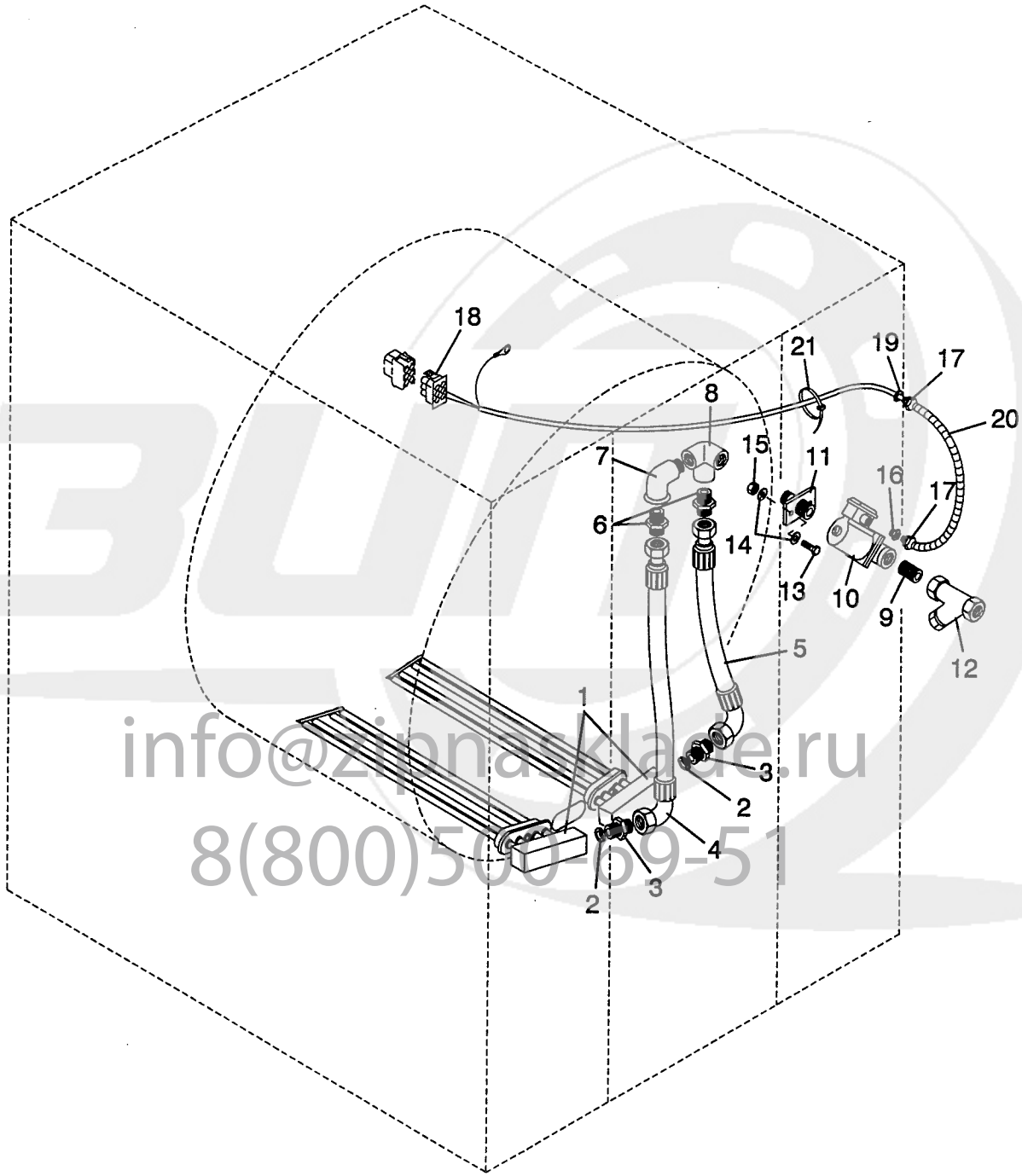

info@zipnasklade.ru
8(800)500-69-51

Nº	REF.	DENOMINATION	DENOMINACIÓN	DÉNOMINATION
		STEAM HEATING KITS	KITS CALEFACCIÓN VAPOR	KITS CHAUFFAGE VAPEUR
	717603	STEAM HEATING KIT 50HZ	KIT CALEFACCION VAPOR 50HZ	KIT CHAUFFAGE VAPEUR 50HZ
	717611	STEAM HEATING KIT 60HZ	KIT CALEFACCION VAPOR 60HZ	KIT CHAUFFAGE VAPEUR 60HZ
1	214916	STEAM DISTRIBUTOR	DISTRIBUIDOR VAPOR	DISTRIBUTEUR VAPEUR
2	109777	COPPER GASKET 1/2"	12504 JUNTA COBRE 1/2"	JOINT CUIVRE 1,2"
3	217745	STEAM INLET RACCORD	RACOR ENTRADA VAPOR	RACCORD ENTREE VAPEUR
4	175000	STEAM INLET JOINTING	UNION ENTRADA VAPOR	UNION ENTREE VAPEUR
5	175018	STEAM INLET JOINTING	UNION ENTRADA VAPOR	UNION ENTREE VAPEUR
6	176479	COUPLING SCREW 3/4"	10904 TORNILLO UNION MM3/4"	VIS UNION 3/4"
7	129502	ELBOW FIG. 92 3/4" GALV.	FIGURA 92 DE 3/4" GALV.	COUDE FIG. 92 3/4" GALV.
8	176461	FIG. 221 3/4" GALV.	FIGURA 221 DE 3/4" GALV.	FIG. 221 3/4" GALV.
9	130005	INNER SLEEVE FIG.531 3/4" GALV	FIGURA 531 DE 3/4" GALV.	MANCHON INTERIEUR FIG.531 3/4"
10	164129	ELECTROV.032U3053 3/4" 220/50 (FOR 50HZ)	ELECT.032U3053/84 3/4" 220/50 (PARA 50 HZ)	ELECTROV.032U3053.3/4" 220/50 (POUR 50 HZ)
	159806	COIL 32K7771 220/50 (FOR 50HZ)	BOBINA DANFOSS 32K7771 220/50 (PARA 50 HZ)	BOBINE 32K7771 220/50 (POUR 50 HZ)
	159822	SPARE KIT EVJHS-15-20	KIT REPUES.EVJHS-15-20 32U3129	KIT RECHANGE EVJHS-15-20
	100511	ELECTROV.032U3053 3/4" 220/60 (FOR 60HZ)	ELECT.032U3053/90 3/4" 220/60 (PARA 60 HZ)	ELECTROV.032U3053 3/4" 220/60 (POUR 60 HZ)
	159814	COIL 32K7776 220/60 (FOR 60HZ)	BOBINA DANFOSS 32K7776 220/60 (PARA 60 HZ)	BOBINE 32K7776 220/60 (POUR 60 HZ)
	159822	SPARE KIT EVJHS-15-20	KIT REPUES.EVJHS-15-20 32U3129	KIT RECHANGE EVJHS-15-20
11	244632	STEAM INLET	ENTRADA VAPOR	ENTREE VAPEUR
12	133736	SCREWED FILTER 3/4" 0,3 PN16	FILTRO COLAD. ROSC.3/4"0'3PN16	FILTRE FILETE 3/4" 0,3 PN16
13	146233	BICR.HEX SCREW DIN933-8 M6X15	TOR.EX.DIN933-8.8 BICR.M 6X 15	VIS HEX DIN933-8.8 BICR.M6X15
14	149526	BICR.WASHER B DIN125-ST 6,4	ARAN.B DIN125-ST BICR. 6,4	RONDELLE B DIN125-ST BICR.6,4
15	150227	BICR HEX NUT DIN934-8 M6	TUER.EX.DIN934-8 BICR.M 6	ECROU HEX DIN934-8 BICR.M6
16	140319	REDUCER PG 13'5-9	REDUCTOR 130904 PG 13'5-9	REDUCTEUR PG 13'5-9
17	140152	RACCORD PG- 9	RACOR PG- 9 REF.330904	RACCORD PG- 9
18	139394	PROTECTOR 1/480704-0	PROTECTOR 1/480704-0	PROTECTEUR 1/480704-0

info@zipnasklade.ru
8(800)500-69-51

Nº	REF.	DENOMINATION	DENOMINACIÓN	DÉNOMINATION
19	140228	COUNTERNUT PG-9	TUERCA PG 280904 PG- 9	CONTREECROU PG-9
20	140707	HOSE HELIPLAST NO 9 REF.77009 (1 METER)	TUBO HELIPLAST NO. 9 REF.77009 (1 METRO)	TUBE HELIPLAST NO 9 REF.77009 (1 METRE)
21	140525	CLAMP 2244-0	BRIDA UNEX 2244-0	BRIDE 2244-0

info@zipnasklade.ru
8(800)500-69-51

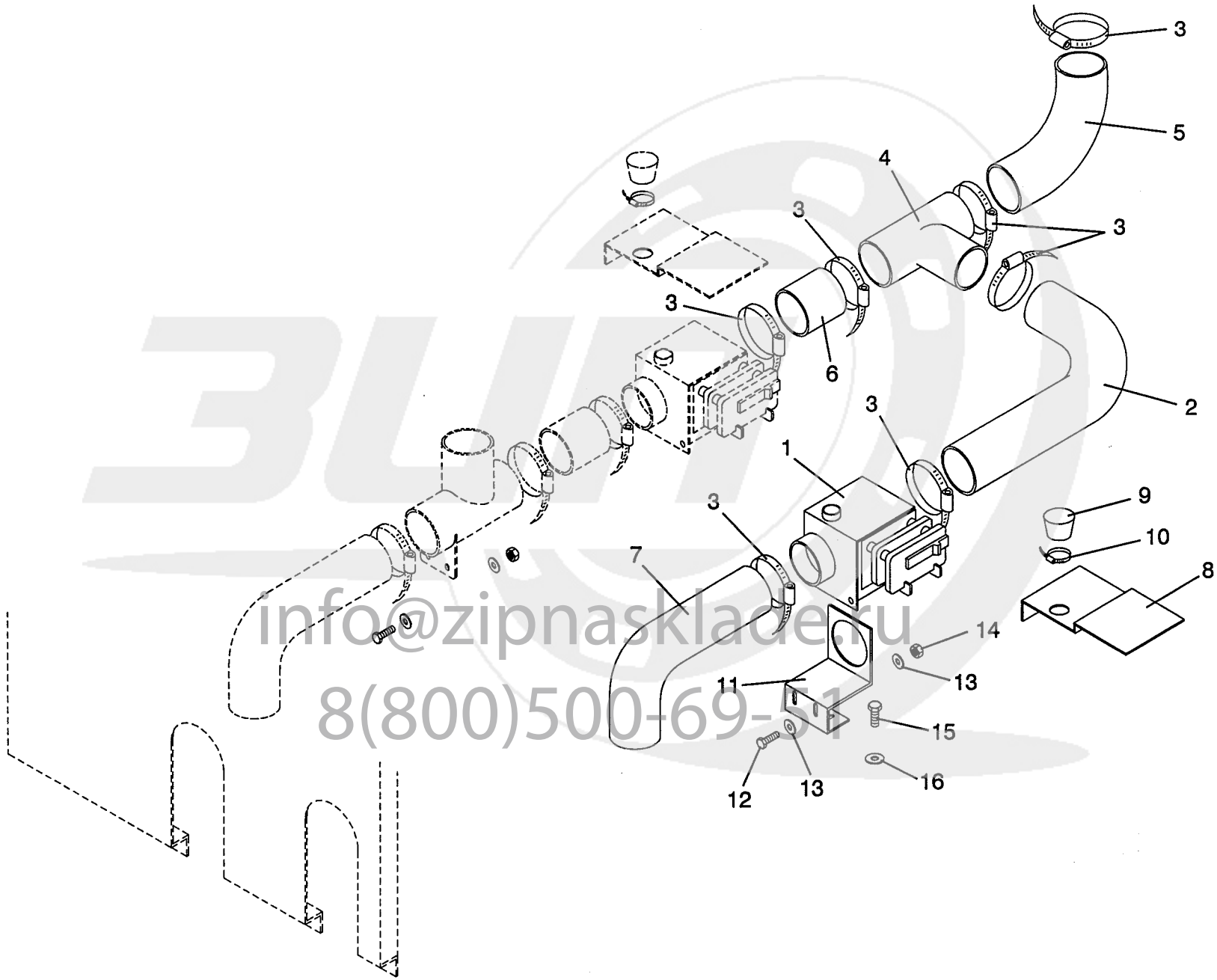

info@zipnasklade.ru
8(800)500-69-51

U.15141

Nº	REF.	DENOMINATION	DENOMINACIÓN	DÉNOMINATION
	797985	SECOND DRAIN KIT	KIT 2º DESAGÜE	KIT DEUXIEME VIDANGE
1	163238	DRAIN (NORMALLY CLOSED) (NORMALLY CLOSED)	DESAGUE(CERRADO A F.DE CORR.) (NORMALMENTE CERRADO)	VIDANGE (NORMALEMENT FERMEE) (NORMALEMENT FERMÉ)
	159764	MOTOR AND GEAR-BOX RE. 453R	MOTOR-REDUCTOR 453R 0,24AMP.	MOTEUR ET REDUCTEUR REF. 453R
	159731	OPERATING SPRING RE.408L	MUELLE ACCIONAMIENTO REF.408L	RESSORT ACTIONNEMENT REF. 408L
	163394	TIGHTNESS SEAL RE. 311VP	RETEN ESTANQUEIDAD REF.VP311	RESERVE ETACHEITE REF. 311VP
	166561	DRAIN BODY RE. 711-SO 3"	CUERPO DESAGÜE REF.711-SO 3"	CORPS VIDANGE REF. 711-SO 3"
	166553	MOTOR FIXING PLATE REF. 304Z	PLACA FIJACION MOTOR REF.304Z	PLAQUE FIXATION MOTEUR 304Z
	166611	MOTOR FIXING PLATE SCREW	TORNILLO PLACA FIJAC.REF.306	VIS PLAQUE FIXATION MOTEUR
	166595	MOTOR PLATE FIXING SCREW 320C	TORNILLO FIJACION REF.320C	VIS FIXATION 320C
	166603	CYL PLATE SCREW DIN7971 8X2"	TOR.CHAPA CILI.DIN7971 8X2"	VIS PLAQUE CYL DIN7971 8X2"
	166579	OPERATING SHAFT 813C	EJE ACCIONAMIENTO REF.813C	AXE ACTIONNEMENT 813C
	166629	OPERATIN SHAFT WASHER 823	ARANDELA EJE ACCIONAM. REF.823	RONDELLE AXE ACTIONNEMENT 823
	166637	MANUAL LEVER REF. 601	PALANCA MANUAL REF.601	LEVIER MANUEL REF. 601
2	278002	RUBER ELBOW D73X350X210	CODO GOMA D73X350X210	COUDE GOMME D73X350X210
3	132340	CLAMP 301510-0 D80-100	ABRAZADERA 80-100	BRIDE 301510-0 D80-100
4	178152	UNION T	TE UNION	T UNION
5	287284	RUBER ELBOW D73X215X170	CODO GOMA D73X215X170	COUDE GOMME D73X215X170
6	277053	DRAIN JOINTING HOSE	TUBO UNION DESAGUE	TUBE UNION VIDANGE
7	163253	DRAIN OUTLET HOSE	TUBO SALIDA DESAGÜE	TUBE SORTIE VIDANGE
8	212795	DRAIN PROTECTION	PROTECCION DESAGÜE	PROTECTION VIDANGE
9	135004	CONICAL END-PIECE REPRIMSA R16	TOPE CONICO REPRIMSA R-16 D30	ARRET CONIQUE REPRIMSA R16 D30
10	149609	CLAMP 301526-5 D25-40	ABRAZADERA 25- 40	BRIDE 301526-5 D25-40
11	243717	DRAIN BRACKET	SOPORTE DESAGÜE	SUPPORT VIDANGE
12	144881	INOX HEX SCREW DIN933 M 6X15	TOR.EX.DIN933INOX A2-70 M 6X16	VIS HEX INOX DIN933 M 6X15
13	149310	INOX.A2 WASHER DIN125 6,4	ARAN. DIN125 INOX A2 6,4	RONDELLE INOX.A2 DIN125 6,4
14	149971	INOX. HEX. NUT DIN 934 M-6	TUER.EX.DIN934 INOX A2-70 M 6	ECROU HEX. INOX. DIN 934 M-6
15	144964	INOX HEX SCREW DIN 933 M-8X15	TOR.EX.DIN933INOX A2-70 M 8X16	VIS HEX INOX DIN 933 M-8X15
16	149351	INOX A2 WASHER DIN 125 8,4	ARAN. DIN125 INOX A2 8,4	RONDELLE INOX A2 DIN 125 8,4

info@zipnasklade.ru
8(800)500-69-51