NOTES TO USE PARTS LIST

Sheets no. 1, 2, 3, 4, 5, 8, 9 & 10:
Are common for all versions.

Sheet no. 6:
Relates to CM version.

Sheet no. 7:
Relates to PM/SM versions.

Sheet no. 10:
The bottom just refers to three water inlets machines (PM only).

Sheet no. 11:
Relates to electrical heated machines.

Sheet no. 12:
Relates to steam heated machines.

ACLARACIONES PARA EL USO DEL DESPIECE

Las hojas n°1, 2, 3, 4, 5, 8, 9 y 10:
Son comunes a todas las variantes.

La hoja n° 6:
Corresponde a la variante CM.

La hoja n° 7:
Corresponde a las variantes PM/SM.

La hoja n° 10:
La parte inferior es sólo para las máquinas con tres entradas de agua (Sólo PM).

La hoja n° 11:
Corresponde a las máquinas con calefacción eléctrica.

La hoja n° 12:
Corresponde a las máquinas con calefacción a vapor.

NOTES UTILISATION VUES ECLATEES

Les feuilles no. 1, 2, 3, 4, 5, 8, 9 et 10:
Sont communes à toutes les versions.

La feuille no. 6:
Correspond à la version CM.

La feuille no. 7:
Correspond aux versions PM/SM.

La feuille no. 10:
La partie inférieure est seulement pour les machines à trois arrivées d'eau (Seulement PM).

La feuille no. 11:
Correspond aux machines à chauffage électrique.

La feuille no. 12:
Correspond aux machines à chauffage à vapeur.

info@zipnasklade.ru
8(800)500-69-51

VERY IMPORTANT:
Before ordering parts be sure they have not been modified. Check it on modification sheet, after the corresponding sheet.

MUY IMPORTANTE:
Al pedir una pieza cerciorarse antes de que la misma no ha sido modificada. Si lo hubiese sido, estaria situada como hoja de modificaciones, detrás de la hoja correspondiente.

TRES IMPORTANT:
Avant de commander une pièce, s'assurer qu'elle n'a pas été modifiée. Le verifier sur feuille de modifications, derrière la feuille correspondante.

From A partir A partir	To Hasta Jusqu'à
700001	.....

HS - 3007

Cod. n° 280552 A

Rev. n° 01/1297

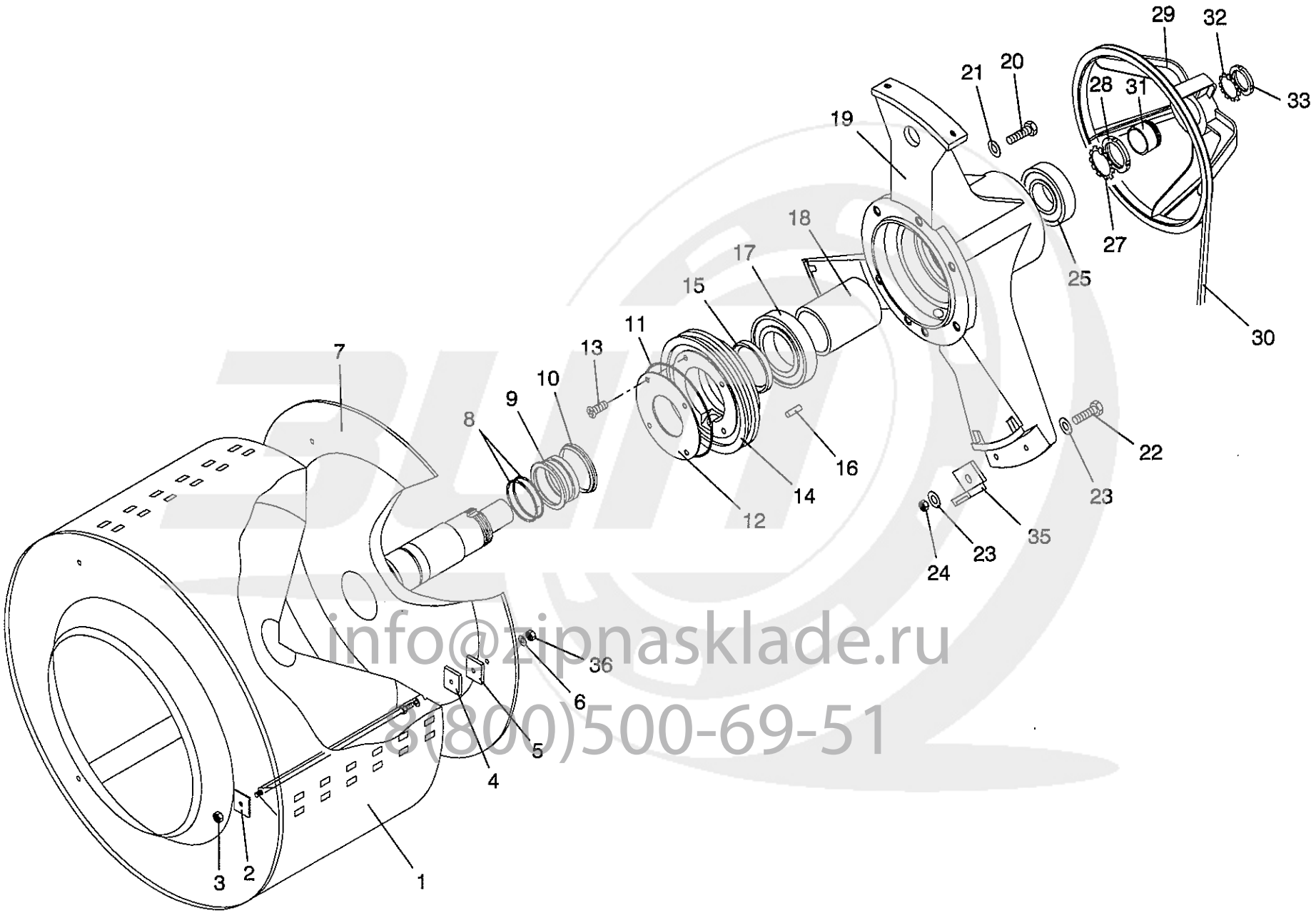

info@zipnasklade.ru
8(800)500-69-51

HS-3007 1

U-12259

Nº	REF.	DENOMINATION	DENOMINACIÓN	DÉNOMINATION
1	264309 *	BASKET BODY	CUERPO TAMBOR	CORPS TAMBOUR
2	158139	BASKET SHOVEL RENFORT	REFUERZO PALA TAMBOR	REFORT PALETTE TAMBOUR
3	251322	BASKET STRETCHER NUT	TUERCA TIRANTE TAMBOR	ECROU TIRANT TAMBOUR
4	121459	BASKET CENTERING PIECE	PIEZA CENTRADO TAMBOR	PIECE CENTRAGE TAMBOUR
5	121467	BASKET CENTERING PIECE	PIEZA CENTRADO TAMBOR	PIECE CENTRAGE TAMBOUR
6	149302	INOX.A2 WASHER DIN 125 13	ARAN. DIN125 INOX A2 13	RONDELLE INOX.A2 DIN 125 13
7	264259	BASKET COUPLING	ACOPLAMIENTO TAMBOR	ASSAMBLAGE TAMBOUR
8	159681	TORIC GASKET 50X56X3 RE.2676	JUNTA TORICA 50X56X3 REF.2676	JOINT TORIQUE 50X56X3 REF.2676
9	264218	SEAL RING	ANILLO RETENES	BAGUE RESERVES
10	144576	RING V-RING V- 60 A	ANILLO V-RING V- 60 A NBR510	BAGUE V-RING V 60 A
11	144493	TORIC GASKET 100X112X6	JUNTA TORICA 100X112X6	JOINT TORIQUE 100X112X6
12	264234	SEAL COVER PLATE	PLATINA TAPA RETEN	PLATINE COUVERCLE RESERVE
13	192864	ALLEN SCREW INOX DIN7991 M4X12	TOR.AV.ALL.INOX DIN7991M 4X 12	VIS ALLEN INOX DIN7991 M4X 12
14	264226	SEAL COVER	TAPA RETEN	COUVERCLE RESERVE
15	144584	SEAL 60X80X10 BA	RETEN 60X80X10 BA	RESERVE 60X80X10 BA
16	150771	FLEXIBLE PIN DIN1481 D4X15	PASADOR ELASTICO DIN1481 D4X15	GOUJON ELASTIQUE DIN1481 D4X15
17	159665	BEARING 6310-2Z/C3	RODAMIENTO 6310-2Z/C3	ROULEMENT 6310-2Z/C3
18	264200	BEARING END-PIECE	TOPE COJINETE	ARRET ROULEMENTS
19	263426	BEARING BOX	CAJA COJINETES	BOITE ROULEMENTS
20	144352	ALLEN SCREW DIN912 M-6X25	TOR.ALLDIN912-8.8 BICR.M 6X 25	VIS ALLEN DIN912 M-6X25
21	149526	BICR.WASHER B DIN125-ST 6,4	ARAN.B DIN125-ST BICR. 6,4	RONDELLE B DIN125-ST BICR.6,4
22	191676	HEX SCREW 8G DIN933 M 8X 35	TOR.EX.DIN933-8.8 BICR.M 8X 35	VIS HEX 8G DIN933 M 8X 35
23	149518	BICR.WASHER B DIN125-ST 8,4	ARAN.B DIN125-ST BICR. 8,4	RONDELLE.B DIN125-ST BICR.8,4
24	164285	SELFBLOCKING NUT DIN985 M-8	TUER.AUTOBL.DIN985-8 BICR.M 8	ECROU AUTOBLOCANT DIN985 M-8
25	128678	BEARING 6308-2Z/C3	RODAMIENTO 6308-2Z/C3	ROULEMENT 6308-2Z/C3
27	131383	LOCKING WASHER MB-8	ARANDELA CIERRE MB- 8	RONDELLE FERMETURE MB-8
28	131441	FIXING NUT KM-8	TUERCA FIJACION KM- 8 FAG	ECROU FIXATION KM-8
29	263418	BASKET PULLEY	POLEA TAMBOR	POULIE TAMBOUR
30	144899	BELT SPZ-1362 (FOR 50HZ)	CORREA TRAPECIAL SPZ-1362 (PARA 50 HZ)	COURROIE SPZ-1362 (POUR 50 HZ)

info@zipnasklade.ru
8(800)500-69-51

Nº	REF.	DENOMINATION	DENOMINACIÓN	DÉNOMINATION
	145318	TRAPEZOIDAL BELT SPZ-1337 (FOR 60HZ)	CORREA TRAPECIAL SPZ-1337 (PARA 60 HZ)	COURROIE TRAPEZOIDALE SPZ-1337 (POUR 60 HZ)
31	144816	FIXING SLEEVE H-2307 (NUT AND WASHER INCLUDES)	MANGUITO FIJACION H-2307 (INCLUYE TUERCA Y ARANDELA)	MANCHON FIXATION H-2307 (ECROU ET RONDELLE COMPRIS)
32	131375	LOCKING WASHER MB-7	ARANDELA CIERRE MB- 7	RONDELLE FERMETURE MB-7
33	131433	FIXING NUT KM-7	TUERCA FIJACION KM- 7	ECROU FIXATION KM-7
35	245142	CLAMP	BRIDA	BRIDE
36	194415	INOX. HEX. NUT DIN 439 M12	TUER.EX.DIN439 INOX A2-70 M12	ECROU HEX. INXO. DIN 439 M12

info@zipnasklade.ru
8(800)500-69-51

*	264317	WHOLE BASKET	TAMBOR COMPLETO	TAMBOUR COMPLET

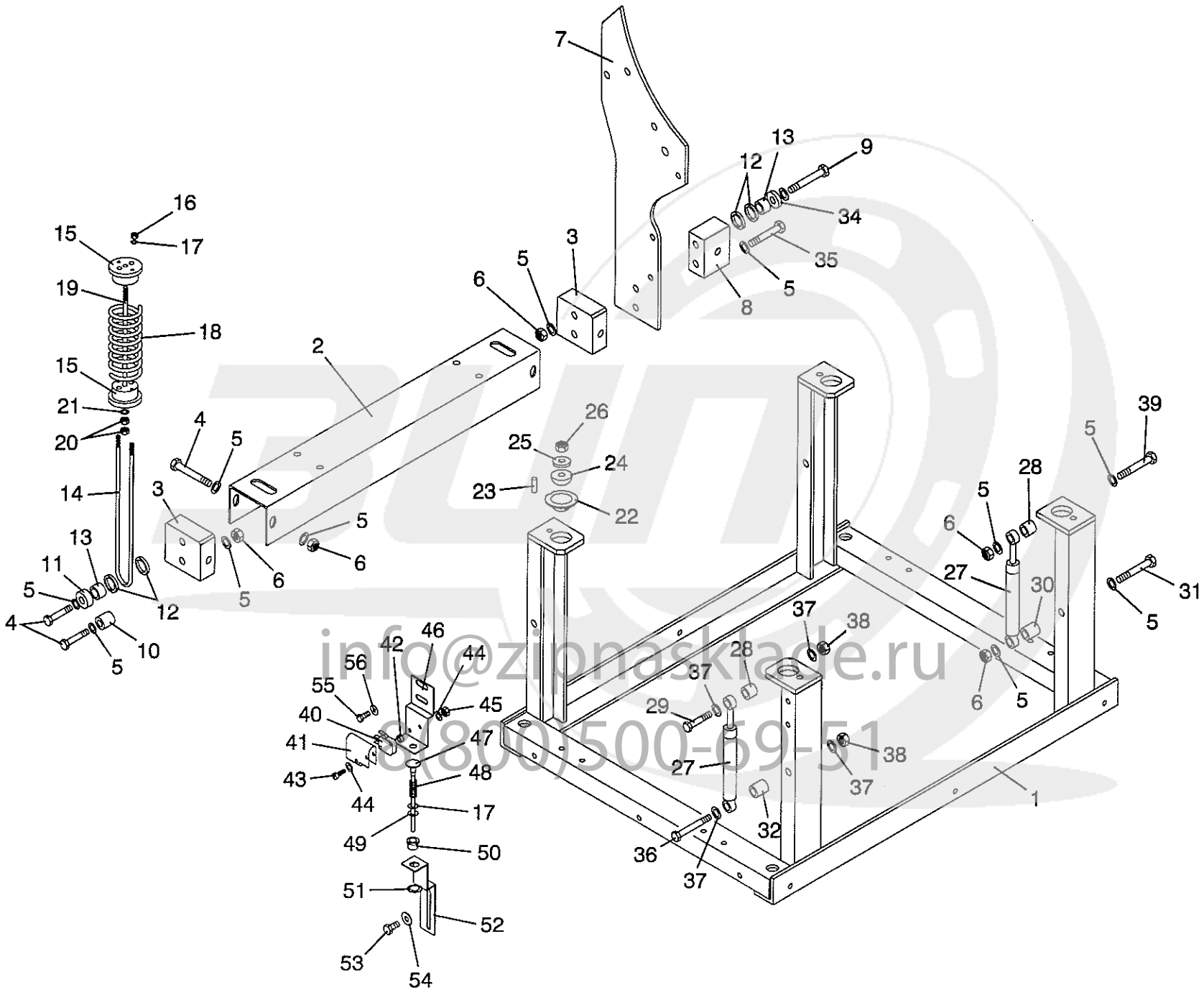

info@zipnaskade.ru
8(800)500-69-51

HS-3007 ②

U-12260

Nº	REF.	DENOMINATION	DENOMINACIÓN	DÉNOMINATION
1	264010	CHASSIS	CHASIS	CHASSIS
2	264358	JOINTING PIECE	PIEZA UNION	PIECE UNION
3	264507	SUSPENSION BRACKET	SOPORTE SUSPENSIÓN	SUPPORT SUSPENSION
4	191684	HEX SCREW 8G DIN931 M 8X 80	TOR.EX.DIN931-8.8 BICR.M 8X 80	VIS HEX 8G DIN931 M 8X 80
5	149518	BICR.WASHER B DIN125-ST 8,4	ARAN.B DIN125-ST BICR. 8,4	RONDELLE.B DIN125-ST BICR.8,4
6	164285	SELFBLOCKING NUT DIN985 M-8	TUER.AUTOBL.DIN985-8 BICR.M 8	ECROU AUTOBLOCANT DIN985 M-8
7	264366	SUSPENDED SET PIECE	PIEZA GRUPO FLOTANTE	PIECE ENSEMBLE SUSPENDU
8	264515	SUSPENSION BRACKET SUPPLEMENT	SUPLEMENTO SOPORTE SUSPENSIÓN	SUPPEMENT SUPPORT SUSPENSION
9	191718	HEX SCREW 8G DIN931 M 8X120	TOR.EX.DIN931-8.8 BICR.M 8X120	VIS HEX 8G DIN931 M 8X120
10	264630	SEPARATOR 16X8,25X28	SEPARADOR 16X8,25X28	SEPARATEUR 16X8,25X28
11	264648	SEPARATOR 28X8,25X11	SEPARADOR 28X8,25X11	SEPARATEUR 28X8,25X11
12	264655	SUSPENSION WASHER	ARANDELA SUSPENSION	RONDELLE SUSPENSION
13	264663	SUSPENSION SLEEVE	CASQUILLO SUSPENSION	FRETTE SUSPENSION
14	263988	SUSPENSION BRACKET	HORQUILLA SUSPENSION	FOURCHETTE SUSPENSION
15	264002	SUSPENSION CLAMP	BRIDA SUSPENSION	BRIDE SUSPENSION
16	176826	SELF-BLOCKING NUT DIN 985 M-5	TUER.AUTOBL.DIN985-8 BICR.M 5	ECROU AUTOBLOCANT DIN 985 M-5
17	149534	BICR.WASHER B DIN125-ST 5,3	ARAN.B DIN125-ST BICR. 5,3	RONDELLE B BICR.DIN125-ST 5,3
18	194324 *	SUSPENSION SPRING	MUELLE SUSPENSION	RESSORT SUSPENSION
19	263996	SUSPENSION BAR	VARILLA SUSPENSION	BAGUETTE SUSPENSION
20	150227	BICR HEX NUT DIN934-8 M6	TUER.EX.DIN934-8 BICR.M 6	ECROU HEX DIN934-8 BICR.M6
21	149526	BICR.WASHER B DIN125-ST 6,4	ARAN.B DIN125-ST BICR. 6,4	RONDELLE B DIN125-ST BICR.6,4
22	260984	HINGE-JOINT BRACKET	SOPORTE ROTULA	SUPPORT ROTULE
23	150771	FLEXIBLE PIN DIN1481 D4X15	PASADOR ELASTICO DIN1481 D4X15	GOUJON ELASTIQUE DIN1481 D4X15
24	194654	HINGE-JOINT	ROTULA	ROTULE
25	264747	WASHER 25X6,5X4	ARANDELA 25X6,5X4	RONDELLE 25X6,5X4
26	176834	SELFBLOCKING NUT DIN985 M-6	TUER.AUTOBL.DIN985-8 BICR.M 6	ECROU AUTOBLOCANT DIN985 M-6
27	175091	FRICTION SHOCK-ABSORBER	AMORT.FRICC.154020011336 180N	AMORTISSEUR FRICTION
28	261644	SEPARATOR 25X10,5X10	SEPARADOR 25X10,5X10	SEPARATEUR 25X10,5X10
29	191734	HEX SCREW 8G DIN931 M10X 65	TOR.EX.DIN931-8.8 BICR.M10X 65	VIS HEX 8G DIN931 M10X 65
30	264739	SEPARATOR 25X10,5X43	SEPARADOR 25X10,5X43	SEPARATEUR 25X10,5X43

info@zipnasklade.ru
8(800)500-69-51

Nº	REF.	DENOMINATION	DENOMINACIÓN	DÉNOMINATION
31	191759	HEX SCREW 8G DIN931 M10X150	TOR.EX.DIN931-8.8 BICR.M10X150	VIS HEX 8G DIN931 M10X150
32	264721	SEPARATOR 25X10,5X11,5	SEPARADOR 25X10,5X11,5	SEPARATEUR 25X10,5X11,5
34	261529	WASHER 25X8,5X4	ARANDELA 25X8,5X4	RONDELLE 25X8,5X4
35	191700	HEX SCREW 8G DIN931 M 8X100	TOR.EX.DIN931-8.8 BICR.M 8X100	VIS HEX 8G DIN931 M 8X100
36	192765	HEX SCREW 8G DIN 931 M-10X120	TOR.EX.DIN931-8.8 BICR.M10X120	VIS HEX 8G DIN 931 M-10X120
37	149500	BICR.WASHER B DIN125-ST 10,5	ARAN.B DIN125-ST BICR.10,5	RONDELLE B DIN125-ST BICR.10,5
38	150649	SELFBLOCKING NUT DIN 985 M-10	TUER.AUTOBL.DIN985-8 BICR.M10	ECROU AUTOBLOCANT DIN 985 M-10
39	175745	HEX SCREW 8G DIN 931 M-10X60	TOR.EX.DIN931-8.8 BICR.M10X 60	VIS HEX 8G DIN 931 M-10X60
40	197046	MINISWITCH 83161.344 I W3	MINIRRUPTOR 83161.344 I W3	MINIRRUPTEUR 83161.344 I W3
41	281113	MICROSWITCH ISOLATION	AISLANTE MICRORRUPTOR	ISOLANT MICRORRUPTEUR
42	175364	PLASTIC SEPARATOR 6MM SP78/10	SEPARADOR PLASTICO 6MM.SP78/10	SEPARATEUR PLASTIQUE 6MM
43	302554	CYL.BICR.SCREW DIN84-4.8 M3X25	TOR.CIL.DIN84-4.8 BICR.M 3X25	VIS.CYL DIN84-4.8 BICR M 3X25
44	149484	BICR.WASHER B DIN125-ST 3,2	ARAN.B DIN125-ST BICR. 3,2	RONDELLE B.DIN125-ST BICR. 3,2
45	149906	INOX. HEX. NUT DIN 934 M-3	TUER.EX.DIN934 INOX A2-70 M 3	ECROU HEX. INOX DIN934 M-3
46	222141	MICROSWITCH DRIVE BRACKET	SOPORTE ACCIONADOR MICRORRUPT.	SUPPORT ACTIONNEMENT MICRORRUP
47	189407	MICROSWITCH DRIVE	ACCIONADOR MICRORRUPTOR	ACCIONNEMENT MICRORRUPTEUR
48	189399	MICROSWITCH DRIVE SPRING	MUELLE ACCIONADOR MICRORRUPTOR	RESSORT ACTIONNEMENT MICRORRUP
49	147918	QUICK FIXING 211039-6	SUJEC.RAPIDA MIKALOR 211039-6	FIXATION RAPIDE 211039-6
50	119305	MICROSWITCH DRIVE SLEEVE	CASQUILLO ACCIONADOR MICRORRUP	FRETTE ACTIONNEMENT MICROR.
51	134924	QUICK FIXING 2110441	SUJEC.RAPIDA MIKALOR 211044-1	FIXATION RAPIDE 2110441
52	222158	MICROSWITCH DRIVE END-PIECE	TOPE ACCIONADOR MICRORRUPTOR	ARRET ACTIONNEMENT MICRORRUPT
53	146233	BICR.HEX SCREW DIN933-8 M6X15	TOR.EX.DIN933-8.8 BICR.M 6X 15	VIS HEX DIN933-8.8 BICR.M6X15
54	115758	WASHER 20X7X2	ARANDELA 20X7X2	RONDELLE 20X7X2
55	146258	BIC.HEX SCREW DIN933-4.8 M4X10	TOR.EX.DIN933-4.8 BICR.M 4X 10	VIS HEX DIN933-4.8 BICR.M 4X10
56	149476	BICR.WASHER B DIN125-ST 4,3	ARAN.B DIN125-ST BICR. 4,3	RONDELLE B DIN125-ST BICR.4,3
*	263970	SUSPENSION SET	CONJUNTO SUSPENSION (COMPLETO)	ENSEMBLE SUSPENSION

info@zipnasklade.ru
8(800)500-69-51

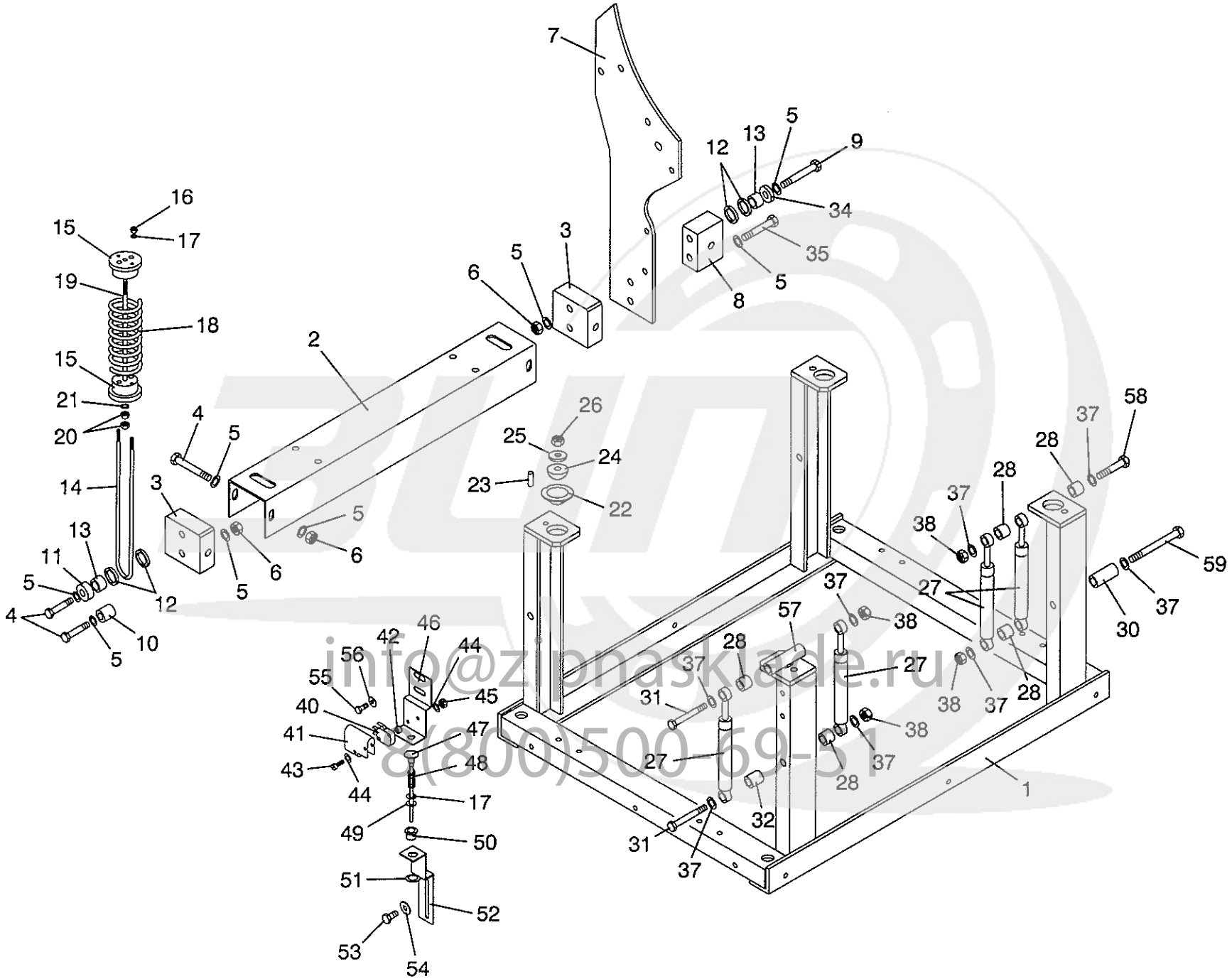

info@zipnasklade.ru
8(800)500 69-31

HS-3007 ②

U.13093

Nº	REF.	DENOMINATION	DENOMINACIÓN	DÉNOMINATION
		FROM MACHINE Nº 700.302	A PARTIR DE LA MÁQUINA Nº 700.302	A PARTIR DE LA MACHINE Nº 700.302
27	193912	SHOCK-ABSORBER 154020011323 (8 UNITS)	AMORT.FRICC.154020011323 120N (8 UNIDADES)	AMORTISSEUR 154020011323 (8 UNITÉS)
29	191734	CANCELLED	ANULADO	ANNULE
39	175745	CANCELLED	ANULADO	ANNULE
57	287946	SEPARATOR 25X10,5X59,5	SEPARADOR 25X10,5X59,5	SEPARATEUR 25X10,5X59,5
58	191858	HEX. SCREW 8G DIN931 M10X90	TOR.EX.DIN931-8.8 BICR.M10X 90	VIS HEX. 8G DIN931 M10X90
59	305680	BIC.HEX SCREW DIN933 M10X180	TOR.EX.DIN931-8.8 BICR.M10X180	VIS HEX DIN933 BICR.M10X180

info@zipnasklade.ru
8(800)500-69-51

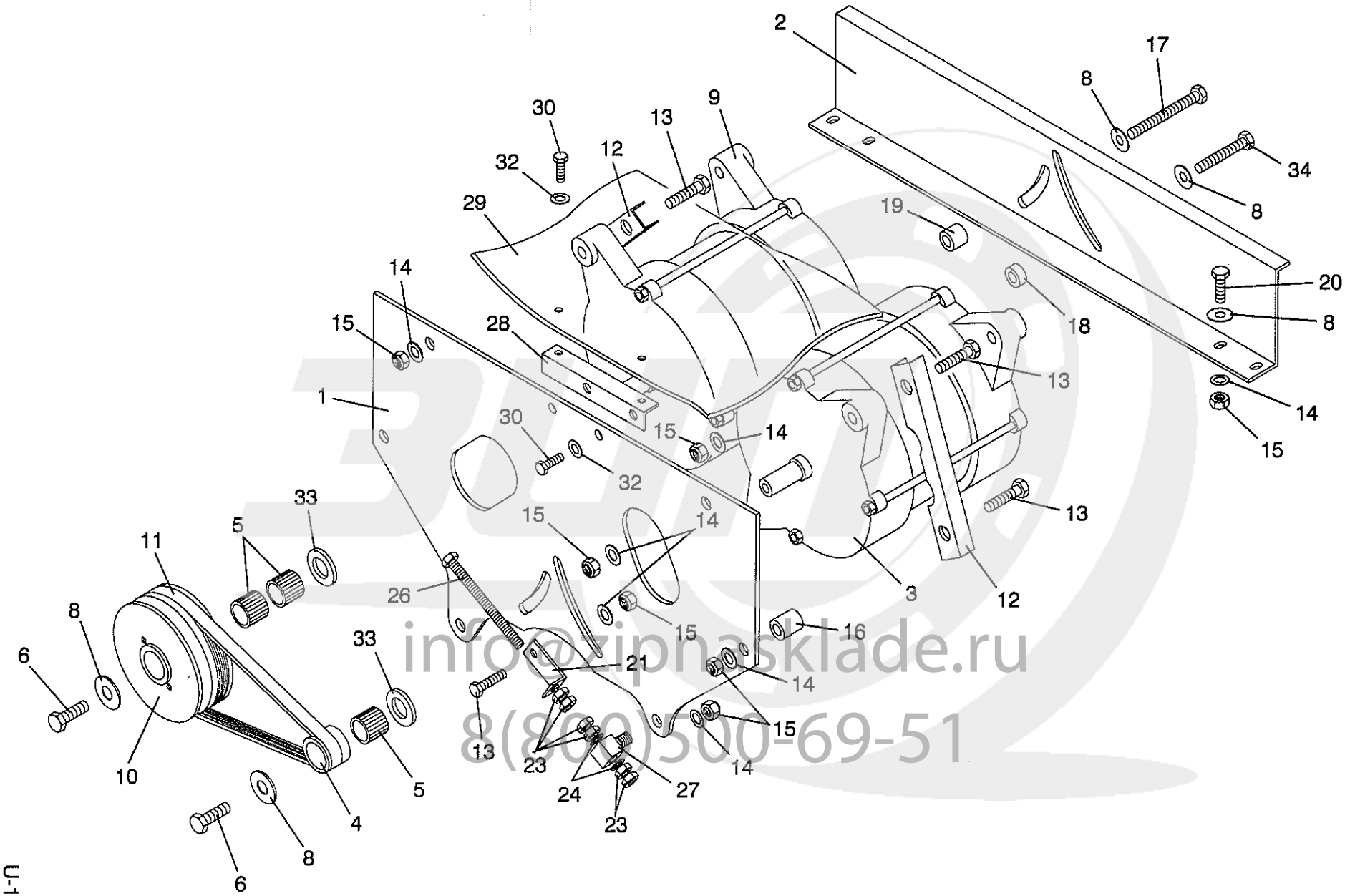

info@ziphasklade.ru
8(800)500-69-51

U-12261

HS-3007 ③

Nº	REF.	DENOMINATION	DENOMINACIÓN	DÉNOMINATION
1	264424	MOTOR PLATE	PLACA MOTORES	PLAQUE MOTEUR
2	264341	MOTOR BRACKET	SOPORTE MOTORES	SUPPORT MOTEURS
3	192195	MOTOR MT 80 80 3PH 220/380-50	MOTOR MT 80 80 III 220/380-50	MOTEUR MT 80 80 3PH 220/380-50
	192187	MOTOR MT 80 80 3PH 240/415-50	MOTOR MT 80 80 III 240/415-50	MOTEUR MT 80 80 3PH 240/415-50
	192179	MOTOR MT 80 80 3PH 254/440-50	MOTOR MT 80 80 III 254/440-50	MOTEUR MT 80 80 3PH 254/440-50
	192161	MOTOR MT 80 80 3PH 200/346-50	MOTOR (192153)	MOTEUR MT 80 80 3PH 200/346-50
	192153	MOTOR MT 80 80 3PH 208/380-60 (FOR 220-240/380V 60HZ)	MOTOR MT 80 80 III 208/380-60 (PARA 220-240/380V 60HZ)	MOTEUR MT 80 80 3PH 208/380-60 (POUR 220-240/380V 60HZ)
	192146	MOTOR MT 80 80 3PH 254/440-60	MOTOR (192187)	MOTEUR MT 80 80 3PH 254/440-60
	192138	MOTOR MT 80 80 3PH 200/346-60	MOTOR MT 80 80 III 200/346-60	MOTEUR MT 80 80 3PH 200/346-60
	128579	BEARING 6204 ZZ QE6 (COUPLING SIDE)	RODAMIENTO 6204-2Z (LADO ACOPLE)	ROULEMENT 6204 ZZ QE6 (COTE COUPLAGE)
	305706	BEARING 6203 ZZ QE6 (FAN SIDE)	RODAMIENTO 6203-2Z QE6 (LADO VENTILADOR)	ROULEMENT 6203 ZZ QE6 (CÔTÈ VENTILATEUR)
4	194464	WASH MOTOR PULLEY	POLEA MOTOR LAVADO	POULIE MOTEUR LAVAGE
5	193920	STAR TOLERANCE RING	ANILLO TOLER.STAR 0820-018-52	BAGUE TOLERANCE STAR
6	166652	BIC.HEX SCREW DIN933-8.8 M8X15	TOR.EX.DIN933-8.8 BICR.M 8X 15	VIS HEX DIN933-8.8 BICR. M8X15
8	261529	WASHER 25X8,5X4	ARANDELA 25X8,5X4	RONDELLE 25X8,5X4
9	192120	MOTOR MT 62 60 3PH 220/380-50	MOTOR MT 62 60 III 220/380-50	MOTEUR MT 62 60 3PH 220/380-50
	192112	MOTOR MT 62 60 3PH 240/415-50	MOTOR MT 62 60 III 240/415-50	MOTEUR MT 62 60 3PH 240/415-50
	192104	MOTOR MT 62 60 3PH 254/440-50	MOTOR MT 62 60 III 254/440-50	MOTEUR MT 62 60 3PH 254/440-50
	192096	MOTOR MT 62 60 3PH 200/346-50	MOTOR MT 62 60 III 200/346-50	MOTEUR MT 62 60 3PH 200/346-50
	192088	MOTOR MT 62 60 3PH 208/380-60 (FOR 220-240/380V 60HZ)	MOTOR MT 62 60 III 208/380-60 (PARA 220-240/380V 60HZ)	MOTEUR MT 62 60 3PH 208/380-60 (POUR 220-240/380V 60HZ)
	192070	MOTOR MT 62 60 3PH 254/440/60	MOTOR (192112)	MOTEUR MT 62 60 3PH 254/440/60
	192062	MOTOR MT 62 60 3PH 200/346-60	MOTOR MT 62 60 III 200/346-60	MOTEUR MT 62 60 3PH 200/346-60
	128579	BEARING 6204 ZZ QE6 (COUPLING SIDE)	RODAMIENTO 6204-2Z (LADO ACOPLE)	ROULEMENT 6204 ZZ QE6 (COTE COUPLAGE)
	305706	BEARING 6203 ZZ QE6 (FAN SIDE)	RODAMIENTO 6203-2Z QE6 (LADO VENTILADOR)	ROULEMENT 6203 ZZ QE6 (CÔTÈ VENTILATEUR)
10	194472	EXTRACT MOTOR PULLEY (FOR 5OHZ)	POLEA MOTOR CENTRIFUGADO (PARA 50 HZ)	POULIE MOTEUR ESSORAGE (POUR 50 HZ)
	194480	EXTRACT MOTOR PULLEY (FOR 60HZ)	POLEA MOTOR CENTRIFUGADO (PARA 60 HZ)	POULIE MOTEUR ESSORAGE (POUR 60 HZ)

info@zipnasklade.ru
8(800)500-69-51

Nº	REF.	DENOMINATION	DENOMINACIÓN	DÉNOMINATION
11	145458	BELT POLY-V 610 J-7	CORREA POLY-V 610 J-7	COURROIE POLY-V 610 J-7
12	260091	MOTOR FIXING	FIJACION MOTORES	FIXATION MOTEUR
13	191726	HEX SCREW 8G DIN933 M 8X 45	TOR.EX.DIN933-8.8 BICR.M 8X 45	VIS HEX.8G DIN933 M 8X 45
14	149518	BICR.WASHER B DIN125-ST 8,4	ARAN.B DIN125-ST BICR. 8,4	RONDELLE.B DIN125-ST BICR.8,4
15	164285	SELFBLOCKING NUT DIN985 M-8	TUER.AUTOBL.DIN985-8 BICR.M 8	ECROU AUTOBLOCANT DIN985 M-8
16	264671	SEPARATOR 20X8,25X20	SEPARADOR 20X8,25X20	SEPARATEUR 20X8,25X20
17	193391	HEX SCREW 8G DIN933 M- 8X 70	TOR.EX.DIN933-8.8 BICR.M 8X 70	VIS HEX.8G DIN933 M- 8X 70
18	259796	SEPARATOR 20X8,25X10	SEPARADOR 20X8,25X10	SEPARATEUR 20X8,25X10
19	264697	SEPARATOR 20X8,25X30	SEPARADOR 20X8,25X30	SEPARATEUR 20X8,25X30
20	192849	BIC.HEX SCREW DIN933-8 M-8X25	TOR.EX.DIN933-8.8 BICR.M 8X 25	VIS HEX.DIN933-8,8 BICR.M-8X25
21	264689	MOTOR TIGHTENER	TENSOR MOTORES	TENDEUR MOTEURS
23	149963	INOX HEX NUT DIN 934 M-8	TUER.EX.DIN934 INOX A2-70 M 8	ECROU HEX. INOX DIN 934 M-8
24	149351	INOX A2 WASHER DIN 125 8,4	ARAN. DIN125 INOX A2 8,4	RONDELLE INOX A2 DIN 125 8,4
26	263111	INOX HEX SCREW DIN933 M-8X130	TOR.EX.INOX DIN933 M 8X130	VIS HEX INOX DIN933 M-8X130
27	261578	TIGHTENER BRACKET	SOPORTE TENSOR	SUPPORT TENDEUR
28	261933	MOTOR PROTECTOR COVER BRACKET	SOPORTE TAPA PROTEC.MOTORES	SUPPORT COUVERCLE PROT.MOTEURS
29	260075	MOTOR PROTECTION COVER	TAPA PROTECCION MOTORES	COUVERCLE PROTECTION MOTEURS
30	146233	BICR.HEX SCREW DIN933-8 M6X15	TOR.EX.DIN933-8.8 BICR.M 6X 15	VIS HEX DIN933-8.8 BICR.M6X15
32	149526	BICR.WASHER B DIN125-ST 6,4	ARAN.B DIN125-ST BICR. 6,4	RONDELLE B DIN125-ST BICR.6,4
33	261198	WASHER 32X18X3	ARANDELA 32X18X3	RONDELLE 32X18X3
34	192823	HEX SCREW DIN933-8.8 M 8X 55	TOR.EX.DIN933-8.8 BICR.M 8X 55	VIS HEX.DIN933-8.8 M 8X 55

info@zipnasklade.ru
8(800)500-69-51

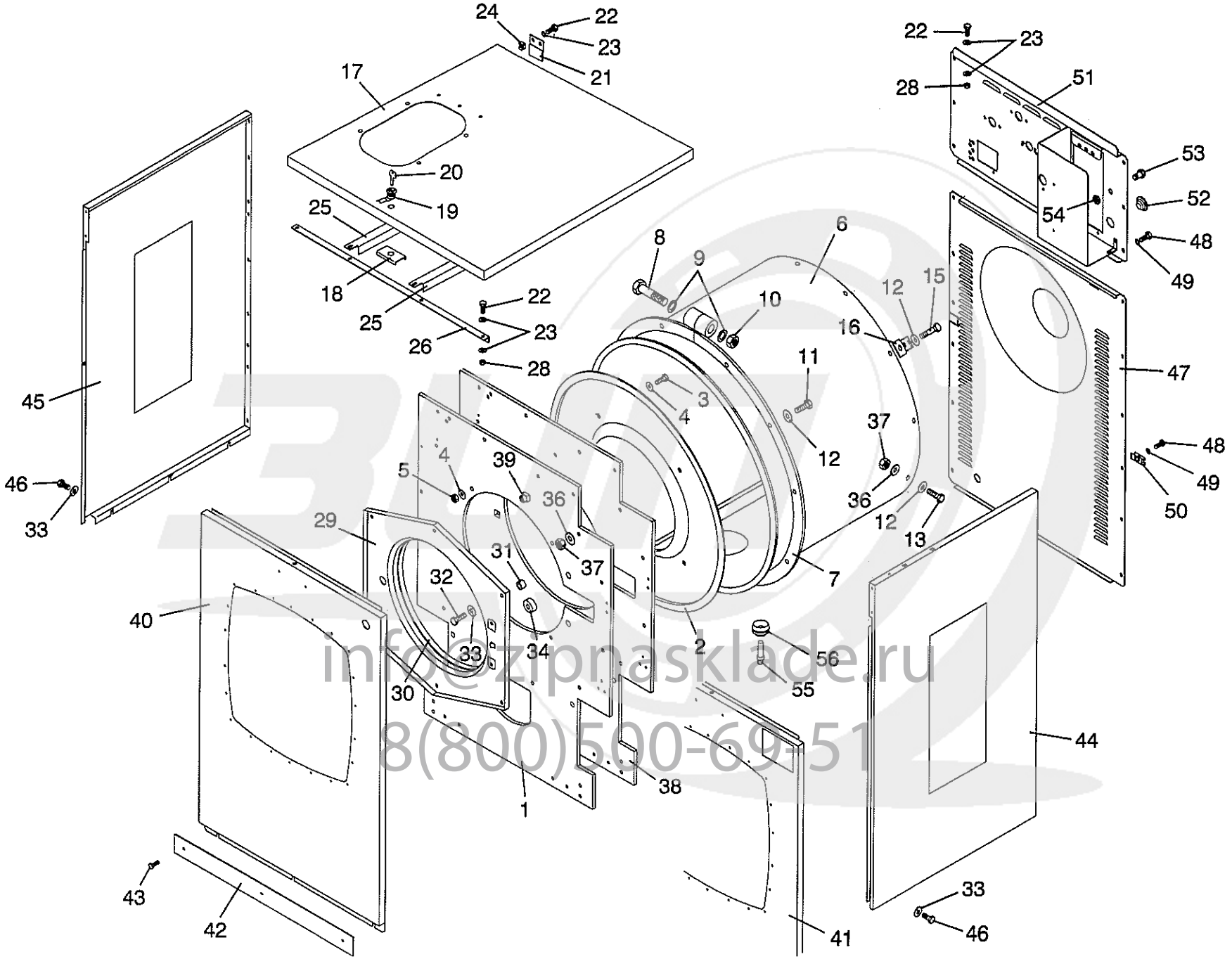

info@zipnasklade.ru
8(800)500-6951

HS-3007 4

U-12262

Nº	REF.	DENOMINATION	DENOMINACIÓN	DÉNOMINATION
1	264556	FRONT PLATE	PLACA FRONTAL ANTERIOR	PLAQUE FRONTALE AVANT
2	263442	OUTER-DRUM FRONT	FRONTAL ENVOLVENTE	FRONTAL CUVE
3	144915	INOX HEX SCREW DIN933 M 6X25	TOR.EX.DIN933INOX A2-70 M 6X25	VIS HEX INOX DIN933 M 6X25
4	149310	INOX.A2 WASHER DIN125 6,4	ARAN. DIN125 INOX A2 6,4	RONDELLE INOX.A2 DIN125 6,4
5	176834	SELFBLOCKING NUT DIN985 M-6	TUER.AUTOBL.DIN985-8 BICR.M 6	ECROU AUTOBLOCANT DIN985 M-6
6	277137	OUTER-DRUM	ENVOLVENTE	CUVE
7	264028	OUTER-DRUM FIXING RING	ARO FIJACION ENVOLVENTE	BAGUE FIXATION CUVE
8	175737	HEX SCREW 8G DIN 931 M-10X80	TOR.EX.DIN931-8.8 BICR.M10X 80	VIS HEX 8G DIN 931 M-10X80
9	149500	BICR.WASHER B DIN125-ST 10,5	ARAN.B DIN125-ST BICR.10,5	RONDELLE B DIN125-ST BICR.10,5
10	150649	SELFBLOCKING NUT DIN 985 M-10	TUER.AUTOBL.DIN985-8 BICR.M10	ECROU AUTOBLOCANT DIN 985 M-10
11	181867	HEX SCREW DIN933 M8X40	TOR.EX.DIN933-8.8 BICR.M 8X 40	VIS HEX DIN933 M8X40
12	261529	WASHER 25X8,5X4	ARANDELA 25X8,5X4	RONDELLE 25X8,5X4
13	191676	HEX SCREW 8G DIN933 M 8X 35	TOR.EX.DIN933-8.8 BICR.M 8X 35	VIS HEX 8G DIN933 M 8X 35
15	192849	BIC.HEX SCREW DIN933-8 M-8X25	TOR.EX.DIN933-8.8 BICR.M 8X 25	VIS HEX.DIN933-8,8 BICR.M-8X25
16	245142	CLAMP	BRIDA	BRIDE
17	264820	TOP COVER	TAPA SUPERIOR	COUVERCLE SUPERIEUR
18	242115	UPPER COVER RENFORT	REFUERZO TAPA SUPERIOR	REFORT COUVERCLE SUPERIEUR
19	196915	LOCK RE.20.09.24 (KEYS INCLUDED)	CERRADURA REF.20.09.24 (INCLUYE LLAVES)	FERMETURE REF.20.09.24 (CLES COMPRISES)
20	196923	LOCK KEY RE.104.12.13	LLAVE REF.10.41.213 COMB.T-205	CLE FERMETURE REF.104.12.13
21	261354	TOP COVER HINGE	BISAGRA TAPA SUPERIOR	CHARNIERE COUVERCLE SUPERIEUR
22	146233	BICR.HEX SCREW DIN933-8 M6X15	TOR.EX.DIN933-8.8 BICR.M 6X 15	VIS HEX DIN933-8.8 BICR.M6X15
23	149526	BICR.WASHER B DIN125-ST 6,4	ARAN.B DIN125-ST BICR. 6,4	RONDELLE B DIN125-ST BICR.6,4
24	165019	CAGED NUT M-6 0,5-1,5	TUER.ENJ.M6 0,5-1,5 R.310007-9	ECROU PRESIONER M-6 0,5-1,5
25	277475	LANE ANGLE	ANGULO LONGITUDINAL	ANGLE LONGITUDINAL
26	276576	CROSS ANGLE	ANGULO TRANSVERSAL	ANGLE TRANSVERSAL
28	150227	BICR HEX NUT DIN934-8 M6	TUER.EX.DIN934-8 BICR.M 6	ECROU HEX DIN934-8 BICR.M6
29	192591	FRONT PLATE COVER	TAPA PLACA FRONTAL	COUVERCLE PLAQUE FRONTAL
30	165472	ETHILENE-PROP. PROFILE (1 METER)	PERFIL ETILENO-PROP.REF.44117L (1 METRO)	PROFILE ETHILENE-PROP. (1 METRE)
31	264705	SEPARATOR 20X 7X22,5	SEPARADOR 20X 7X22,5	SEPARATEUR 20X 7X22,5

info@zipnasklade.ru
8(800)500-69-51

Nº	REF.	DENOMINATION	DENOMINACIÓN	DÉNOMINATION
32	191668	INOX HEX SCREW DIN933 M 6X 35	TOR.EX.DIN933INOX A2-70 M 6X35	VIS HEX.INOX DIN933 M 6X 35
33	115758	WASHER 20X7X2	ARANDELA 20X7X2	RONDELLE 20X7X2
34	264713	SEPARATOR 35X11X20	SEPARADOR 35X11X20	SEPARATEUR 35X11X20
36	149518	BICR.WASHER B DIN125-ST 8,4	ARAN.B DIN125-ST BICR. 8,4	RONDELLE.B DIN125-ST BICR.8,4
37	164285	SELFBLOCKING NUT DIN985 M-8	TUER.AUTOBL.DIN985-8 BICR.M 8	ECROU AUTOBLOCANT DIN985 M-8
38	264564	REAR PLATE FRONT	PLACA FRONTAL POSTERIOR	PLAQUE FRONTALE ARRIÉRE
39	264549	FRONT PLATE NUT	TUERCA PLACA FRONTAL	ECROU PLAQUE FRONTAL
40	282582	FRONT COVER (RED PAINTED WITH MODEL)	TAPA FRONTAL ROJO S-P-C(SIM) (PINTADA ROJA CON MODELO)	COUVERCLE FRONTAL (PEINTE ROUGE AVEC MODELE)
	222331	FRONT COVER (RED PAINTED WITHOUT MODEL)	TAPA FRONTAL N-COOB ROJO (PINTADA ROJA SIN MODELO)	COUVERCLE FRONTAL (PEINTE ROUGE SANS MODELE)
	282590	FRONT COVER (GREY PAINTED WITH MODEL)	TAPA FRONTAL GRIS S-P-C(SIM) (PINTADA GRIS CON MODELO)	COUVERCLE FRONTAL (PEINTE GRIS AVEC MODELE)
	221788	FRONT COVER (GREY PAINTED WITHOUT MODEL)	TAPA FRONTAL N-COOB GRIS (PINTADA GRIS SIN MODELO)	COUVERCLE FRONTAL (PEINTE GRIS SANS MODELE)
	265348	FRONT COVER (INOX)	TAPA FRONTAL INOX S-P-C(SIM) (INOX)	COUVERCLE FRONTAL (INOX)
41	282608	FRONT COVER (RED PAINTED WITH MODEL)	TAPA FRONTAL ROJO C(COM) (PINTADA ROJA CON MODELO)	COUVERCLE FRONTAL (PEINTE ROUGE AVEC MODELE)
	222117	FRONT COVER (RED PAINTED WITHOUT MODEL)	TAPA FRONTAL M ROJO (PINTADA ROJA SIN MODELO)	COUVERCLE FRONTAL (PEINTE ROUGE SANS MODELE)
	282616	FRONT COVER (GREY PAINTED WITH MODEL)	TAPA FRONTAL GRIS C(COM) (PINTADA GRIS CON MODELO)	COUVERCLE FRONTAL (PEINTE GRIS AVEC MODELE)
	222133	FRONT COVER (GREY PAINTED WITHOUT MODEL)	TAPA FRONTAL M GRIS (PINTADA GRIS SIN MODELO)	COUVERCLE FRONTAL (PEINTE GRIS SANS MODELE)
	265330	FRONT COVER (INOX)	TAPA FRONTAL INOX C(COM) (INOX)	COUVERCLE FRONTAL (INOX)
42	265264	TOE PLATE	ZOCALO	SOCLE
43	144337	ALLEN SCREW DIN912 M 6X15	TOR.ALLDIN912-8.8 BICR.M 6X 15	VIS ALLEN DIN912 M 6X15
44	264861	RIGHT SIDE PANEL (PAINTED)	TAPA LATERAL DERECHA (PINTADA)	COUVERCLE LATERAL DROITE (PEINT)
	264846	RIGHT SIDE PANEL (INOX)	TAPA LATERAL DERECHA (INOX)	COUVERCLE LATERAL DROITE (INOX)
45	264879	LEFT SIDE PANEL (PAINTED)	TAPA LATERAL IZQUIERDA (PINTADA)	COUVERCLE LATERAL GAUCHE (PEINT)
	264853	LEFT SIDE PANEL (INOX)	TAPA LATERAL IZQUIERDA (INOX)	COUVERCLE LATERAL GAUCHE (INOX)

info@zipnasklade.ru
8(800)500-69-51

Nº	REF.	DENOMINATION	DENOMINACIÓN	DÉNOMINATION
46	144881	INOX HEX SCREW DIN933 M 6X15	TOR.EX.DIN933INOX A2-70 M 6X16	VIS HEX INOX DIN933 M 6X15
47	277491	REAR PLATE	TAPA POSTERIOR	COUVERCLE ARRIERE
48	149153	PLATE SCREW ST-4 80 C/AL.T25	TOR.CHAPA ST-4 80 C/AL.T25	VIS PLAQUE ST-4 80 C/AL.T25
49	149534	BICR.WASHER B DIN125-ST 5,3	ARAN.B DIN125-ST BICR. 5,3	RONDELLE B BICR.DIN125-ST 5,3
50	135228	NUT NUL 506-2A REF. 213047-3	TUERCA SEG.NUL 506-2B 213048-1	ECROU NUL 506-2A REF. 213047-3
51	276790	REAR PANEL	PANEL POSTERIOR	PANNEAU POSTERIEUR
52	139683	CONE ECPC-6	CONO HIMEL ECPC-6	CONE ECPC-6
53	140103	STUFFING-BOX PG-11	PRENSAES.NORMADIX 601104 PG-11	PRESSE-ETOUPES PG-11
54	140236	COUNTERNUT PG-11	TUERCA PG 281104 PG-11	CONTREECROU PG-11
55	193862	NTC RESISTANCE 2322 640 90042	RESISTENCIA NTC 2381 640 90042	RESISTANCE NTC 2322 640 90042
56	256149	SENSOR SHEATH LODGING	PASAMUROS SENSOR	LOGEMENT SENSEUR

info@zipnasklade.ru
8(800)500-69-51

Nº	REF.	DENOMINATION	DENOMINACIÓN	DÉNOMINATION
		FROM MACHINE Nº 700.436	A PARTIR DE LA MÁQUINA Nº 700.436	A PARTIR DE LA MACHINE Nº 700.436
47	289876	REAR PLATE	TAPA POSTERIOR	COUVERCLE ARRIERE

info@zipnasklade.ru
8(800)500-69-51

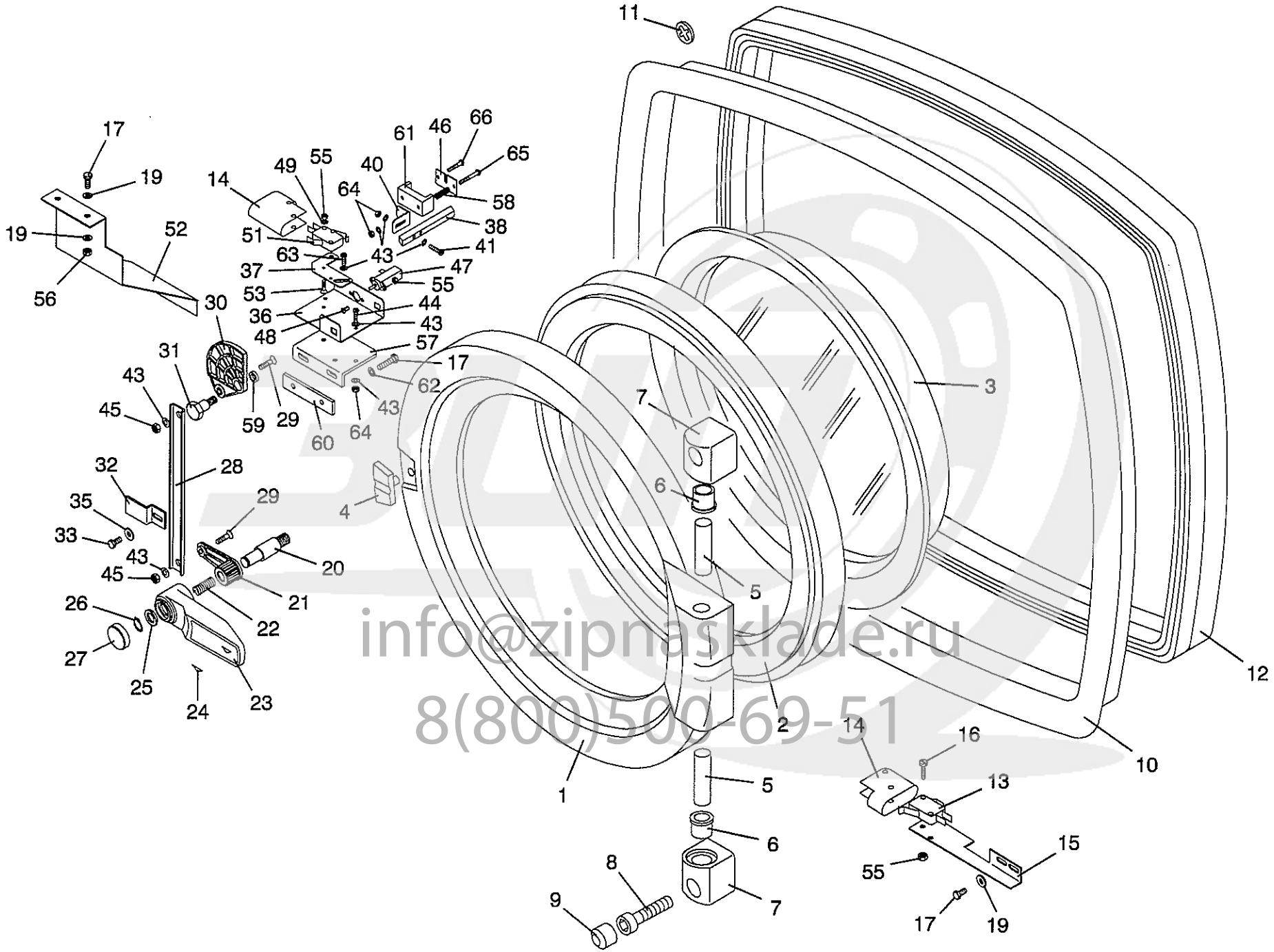

info@zipnasklade.ru
8(800)500-69-51

HS-3007 5

U-12263

Nº	REF.	DENOMINATION	DENOMINACIÓN	DÉNOMINATION
1	260935 *	DOOR	ESCOTILLA	HUBLOT
2	187146	DOOR GASKET	JUNTA ESCOTILLA	JOINT HUBLOT
3	187153	SPYHOLE	MIRILLA	VITRE
4	189555	DOOR PIECE	PIEZA ESCOTILLA	PIECE HUBLOT
5	261156	DOOR BOLT	BULON ESCOTILLA	BOULON HUBLOT
6	128827	SELFOIL SLEEVE B11B12-17-15/22	COJ. SELFOIL B11B12-17-15/22-3	FRETTE SELFOIL B11B12-17-15/22
7	261131	HINGE	BISAGRA	CHARNIERE
8	192781	ALLEN SCREW DIN 912 M-10X45	TOR.ALLDIN912-8.8 BICR.M10X 45	VIS ALLEN DIN 912 M-10X45
9	189506	HINGE STOPPER	TAPON CHARNELA	BOUCHON CHARNIERE
10	189571	FRONT FRAME	MARCO FRONTAL	CADRE FRONTAL
11	193540	MIKALOR QUICK FIXING 211038-8	SUJEC.RAPIDA MIKALOR 211038-8	FIXATION RAPIDE MIKALOR
12	261149	FRONT FRAME PROFILE	PERFIL MARCO FRONTAL	PROFILE CADRE FRONTAL
13	279760	MICROSWITCH	MINIRRUPTOR	MICRORRUPTEUR
14	281113	MICROSWITCH ISOLATION	AISLANTE MICRORRUPTOR	ISOLANT MICRORRUPTEUR
15	281212	MICROSWITCH BRACKET	SOPORTE MICRORRUPTOR	SUPPORT MICRORRUPTEUR
16	146043	BIC CYL SCREW DIN84-4,8 M3X16	TOR.CIL.DIN84-4.8 BICR.M 3X16	VIS CYL DIN84-4,8 BICR.M3X16
17	146282	BICR.HEX SCREW DIN933-8 M 5X15	TOR.EX.DIN933-8.8 BICR.M 5X 15	VIS HEX BICR.DIN933-8.8 M 5X15
19	149534	BICR.WASHER B DIN125-ST 5,3	ARAN.B DIN125-ST BICR. 5,3	RONDELLE B BICR.DIN125-ST 5,3
20	264762	LOCKING SHAFT	EJE CIERRE	AXE FERMETURE
21	194175	LOCKING LEVER	PALANCA CIERRE	LEVIER FERMETURE
22	187401	LOCKING HANDLE SPRING	MUELLE MANECILLA CIERRE	RESSORT POIGNEE FERMETURE
23	189985	KNOB	EMPUÑADURA	POIGNEE
24	193599	KNOB PLATE	PLACA EMPUÑADURA	PLAQUE POIGNEE
25	193680	ADJUSTING WASHER PS10X16X0,5	ARAN.AJUSTE PS10X16X0,5 DIN988	RONDELLE REGLAGE PS10X16X0,5
26	149583	SAFETY WASHER 7 DIN 6799	ARANDELA SEGURIDAD 7 DIN 6799	RONDELLE SECURITE 7 DIN 6799
27	189993	KNOB STOPPER	TAPON EMPUÑADURA	BOUCHON POIGNEE
28	243287	JOINT PLATE	PLETINA ARTICULACION	PLAT ARTICULATION
29	147629	ZINC SCREW DIN963-4.8 M 4X13	TOR.AV.DIN963-4.8 BICR M 4X13	VIS ZINC DIN963-4.8 M 4X13
30	194183	BLOCKING SEMI-DISK	SEMI-DISCO	DEMI-DISQUE BLOCAGE
31	262865	SEMI-DISK BOLT	BULON SEMI-DISCO	BOULON DEMI-DISQUE

info@zipnasklade.ru
8(800)500-69-51

Nº	REF.	DENOMINATION	DENOMINACIÓN	DÉNOMINATION
32	243469	END PIECE	PIEZA TOPE	PIECE ARRET
33	146233	BICR.HEX SCREW DIN933-8 M6X15	TOR.EX.DIN933-8.8 BICR.M 6X 15	VIS HEX DIN933-8.8 BICR.M6X15
35	149526	BICR.WASHER B DIN125-ST 6,4	ARAN.B DIN125-ST BICR. 6,4	RONDELLE B DIN125-ST BICR.6,4
36	281071 +	LOCK BOX COVER	ENVOLVENTE CAJA CIERRE	CUVE BOITE FERMETURE
37	281048	MICROSWITCH FISING BRACKET	SOPORTE FIJACION MICRORRUPTOR	SUPPORT FIXATION MICRORRUPTEUR
38	302000	LOCKING SLIDER	CORREDERA CIERRE	COULISSE FERMETURE
40	281055	SLIDING JOINTING	UNION CORREDERA	UNION COULISSE
41	146100	BICR CYL SCREW DIN 84 M-4X20	TOR.CIL.DIN84-4.8 BICR.M 4X20	VIS CYL BICR DIN 84-4.8 M 4X20
43	149476	BICR.WASHER B DIN125-ST 4,3	ARAN.B DIN125-ST BICR. 4,3	RONDELLE B DIN125-ST BICR.4,3
44	146092	BICR CYLD SCREW DIN84 M 4X 16	TOR.CIL.DIN84-4.8 BICR.M 4X16	VIS CYL BICR DIN84-4.8 M 4X 16
45	132043	SELFBLOCKING NUT DIN985 M 4	TUER.AUTOBL.DIN985-8 BICR.M 4	ECROU AUTOBLOCANT DIN985 M 4
46	280891	SLIDING BLOCKING PIECE	PIEZA BLOQUEADOR DESLIZANTE	PIECE BLOQUEUR COULISSANT
47	196774	THERMO-ACTUATOR 100331 15	TERMOACTUADOR 100331.15 NTA 6	THERMO-ACTIONNEMENT 100331 15
48	147561	SCREW DIN963-4.8 M 3X 7	TOR.AV.DIN963-4.8 BICR M 3X 7	VIS DIN963-4.8 BICR M 3X 7
49	149484	BICR.WASHER B DIN125-ST 3,2	ARAN.B DIN125-ST BICR. 3,2	RONDELLE B.DIN125-ST BICR. 3,2
51	279760	MICROSWITCH	MINIRRUPTOR	MICRORRUPTEUR
52	281238	LOCKING BOX PROTECTION COVER	TAPA PROTECCION CAJA CIERRE	COUVERCLE PROT.BOITE FERMETURE
53	303131	BICR.SCREW DIN963-4.8 M 3X 20	TOR.AV.DIN963-4.8 BICR M 3X20	VIS.T/FRAIS DIN963-4.8 B.M3X20
55	149906	INOX. HEX. NUT DIN 934 M-3	TUER.EX.DIN934 INOX A2-70 M 3	ECROU HEX. INOX DIN934 M-3
56	150177	BICR HEX NUT DIN934-8 M5	TUER.EX.DIN934-8 BICR.M 5	ECROU HEX DIN934-8 BIC.M5
57	281063	LOCKING BOX BRACKET	SOPORTE CAJA CIERRE	SUPPORT BOITE FERMETURE
58	198069	SPRING	MUELLE COMPENSADOR	RESSORT
59	264788	SEPARATOR 20X8,25X6	SEPARADOR 20X8,25X6	SEPARATEUR 20X8,25X6
60	264622	LOCKING BOX PIECE	SUPLEMENTO CAJA CIERRE	PIECE BOITE FERMETURE
61	272575	SLIDING BLOCKER	BLOQUEADOR DESLIZANTE	BLOQUEUR COULISSANT
62	160838	WASHER 14X6X1,5	ARANDELA 14X6X1,5	RONDELLE 14X6X1,5
63	146076	BICR ROUND SCREW DIN84 M 4X 8	TOR.CIL.DIN84-4.8 BICR.M 4X 8	VIS ROND BICR DIN84-4.8 M 4X 8
64	150185	BICR.HEX.NUT DIN934-8 M4	TUER.EX.DIN934-8 BICR.M 4	ECROU HEX.DIN934-8 BICR.M4
65	198051	BICR HEX SCREW DIN931-8.M4X35	TOR.EX.DIN931-4.8 BICR.M 4X 35	VIS HEX BICR.DIN931-8.8 M 4X35
66	278622	SLIDING BLOCKING SCREW	TORNILLO BLOQUEADOR DESLIZANTE	VIS BLOQUEUR COULISSANT

info@zipnasklade.ru
8(800)500-69-51

Nº	REF.	DENOMINATION	DENOMINACIÓN	DÉNOMINATION
*	260943	COMPLETE DOOR	ESCOTILLA COMPLETA	HUBLOT COMPLET
+	281105	COMPLETE LOCKING BOX	CAJA CIERRE COMPLETA	BOITE FERMETURE COMPLETE

info@zipnasklade.ru
8(800)500-69-51

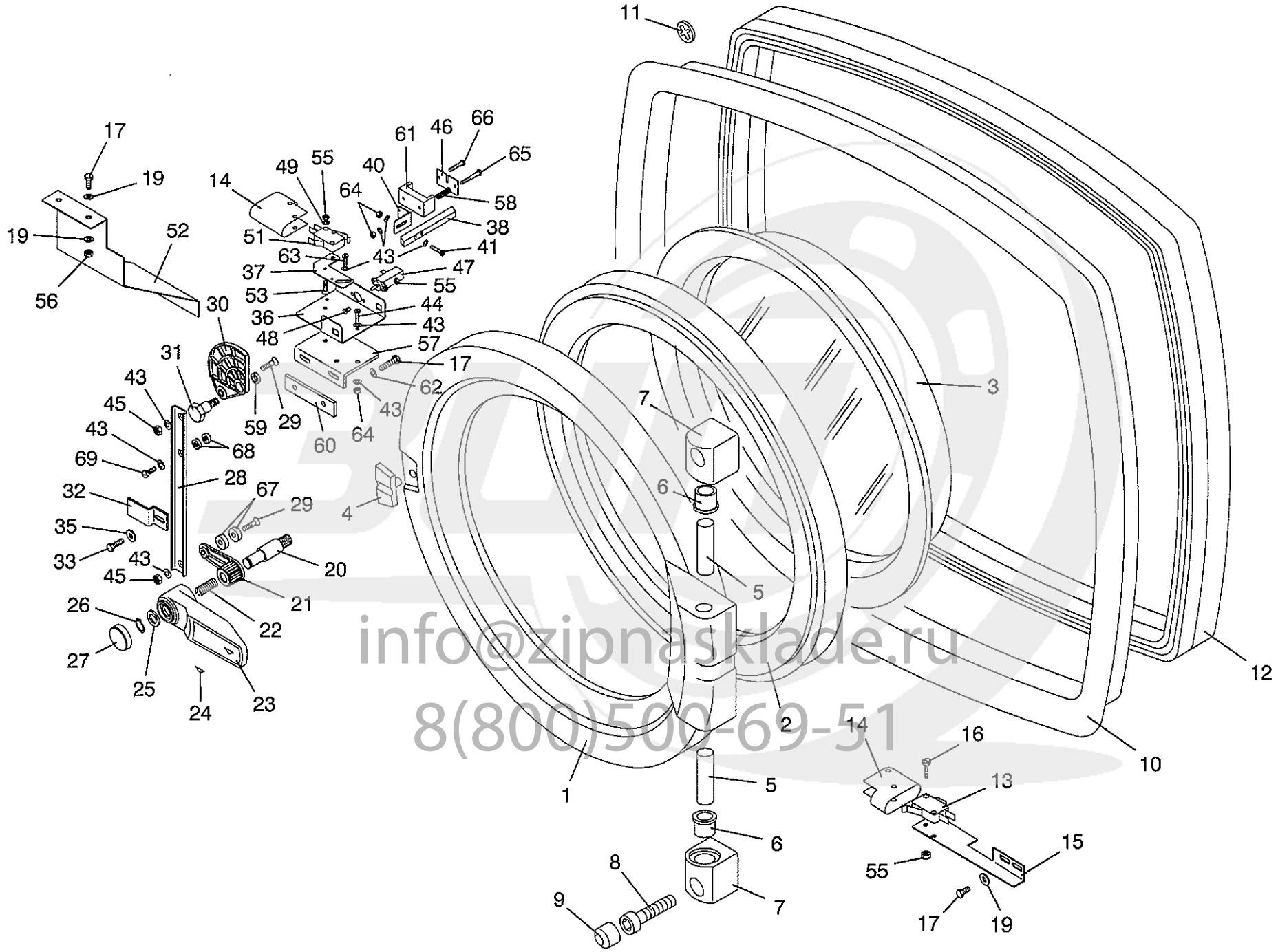

info@zipnasklade.ru
8(800)500-69-51

HS-3007 5

U.13096

Nº	REF.	DENOMINATION	DENOMINACIÓN	DÉNOMINATION
		FROM MACHINE Nº 700.302	A PARTIR DE LA MÁQUINA Nº 700.302	A PARTIR DE LA MACHINE Nº 700.302
29	302604	BICR.SCREW DIN963-4.8 M 4X 20	TOR.AV.DIN963-4.8 BICR M 4X20	VIS T/FRAIS.DIN963-4.B.M 4X 20
67	288316	END PIECE	TOPE PASANTE	ARRET
68	288308	END PIECE	TOPE ROSCADO	ARRET
69	145250	BICR.CYL SCREW DIN84-4.8 M4X12	TOR.CIL.DIN84-4.8 BICR.M 4X12	VIS CYL DIN84-4.8 BICR.M 4X12

info@zipnasklade.ru
8(800)500-69-51

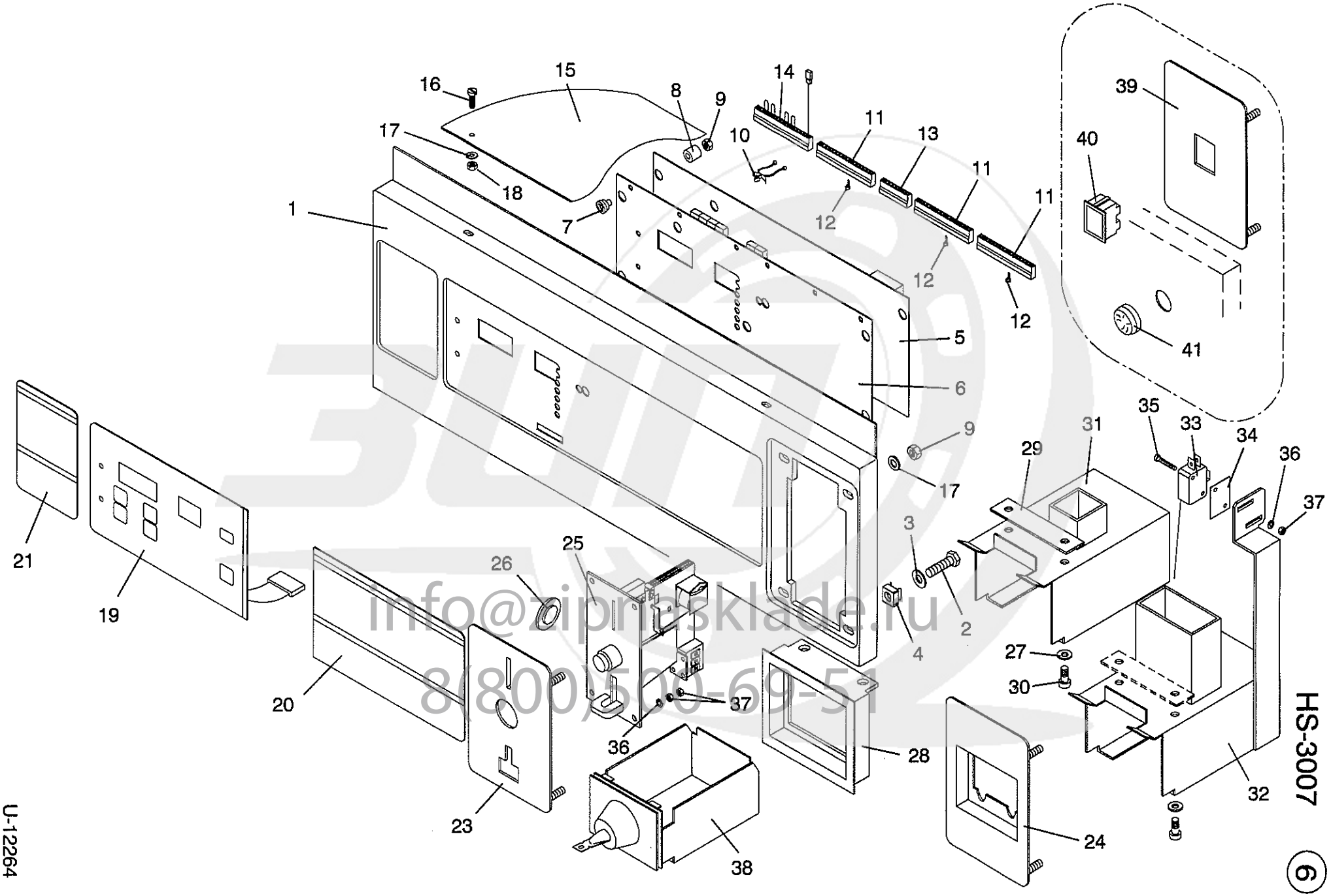

info@zipmasklade.ru
8(800)500-69-51

HS-3007

6

U-12264

Nº	REF.	DENOMINATION	DENOMINACIÓN	DÉNOMINATION
1	280644	CONTROL PANEL	PANEL DE MANDOS	TABLEAU DE COMMANDES
2	144881	INOX HEX SCREW DIN933 M 6X15	TOR.EX.DIN933INOX A2-70 M 6X16	VIS HEX INOX DIN933 M 6X15
3	149310	INOX.A2 WASHER DIN125 6,4	ARAN. DIN125 INOX A2 6,4	RONDELLE INOX.A2 DIN125 6,4
4	165019	CAGED NUT M-6 0,5-1,5	TUER.ENJ.M6 0,5-1,5 R.310007-9	ECROU PRESIONER M-6 0,5-1,5
5	300798	PROCESSOR BOARD SM/CM	PLACA MICROPROCESADOR SM/CM	PLAQUE MICROPROCESSEUR SM/CM
	303354	EPROM FOR WASHER SM3/CM3 VER8	EPROM LAVADORAS SM3/CM3 VER08	EPROM P.MACH.A LAVER SM3/CM3V8
	303933	EEPROM ST24C04	EEPROM ST24C04	EEPROM ST24C04
	187203	INPUT OPTOISOLATOR 4N26	OPTOACOPLADOR ENTRADA 4N26	OPTOISOLATOR ENTREE 4N26
	187211	OUTPUT OPTOISOLATOR S21MD4V	OPTOACOPLADOR SALIDA	OPTOISOLATOR SORTIE S21MD4V
	188003	DISPLAY TDSR 5160	DISPLAY TDSR 5160	DISPLAY TDSR 5160
6	278317	PROCESSOR ISOLATOR	AISLANTE MICROPROCESADOR	ISOLANT MICROPROCESSEUR
7	277392	PLATE-CONTROL SEPARATOR	SEPARADOR PANEL-PLACA	SEPARATEUR TABLEAU-PLAQUE
8	277400	NUT-PLATE SEPARATOR	SEPARADOR PLACA-TUERCA	SEPARATEUR PLAQUE-ECROU
9	150185	BICR.HEX.NUT DIN934-8 M4	TUER.EX.DIN934-8 BICR.M 4	ECROU HEX.DIN934-8 BICR.M4
10	199893	CLAMP STL-450-3-01	ABRAZADERA STL-450-3-01	BRIDE STL-450-3-01
11	197301	PROTECTOR AMP-UNYT 1-640029-6	PROTECTOR AMP-UNYT 1-640029-6	PROTECTEUR AMP-UNYT 1-640029-6
12	197426	POLARIZATION AMP 640180-1	POSICIONADOR AMP 640180-1	POLARIZATION AMP 640180-1
13	199810	PROTECTOR AMP-UNYT 640029-8	PROTECTOR AMP-UNYT 640029-8	PROTECTEUR AMP-UNYT 640029-8
14	279125	IDENTIFICATION PLUG	CONECTORA IDENTIFICACION	CONNECTEUR IDENTIFICATION
15	258277	PROCESSOR BOARD LID	TAPA PLACA MICROPROCESADOR	COUVERCLE PLAQ.MICROPROCESSEUR
16	145649	INOX FLAT SCREW DIN85 M 4X10	TOR.PLA.DIN85 INOX A2-70 M4X10	VIS PLAT INOX DIN85 M-4X10 A2
17	219758	WASHER 12X4X1,5	ARANDELA 12X4X1,5	RONDELLE 12X4X1,5
18	132043	SELFBLOCKING NUT DIN985 M 4	TUER.AUTOBL.DIN985-8 BICR.M 4	ECROU AUTOBLOCANT DIN985 M 4
19	300681	WASHER KEYBOARD CM	TECLADO LAVADORA CM	CLAVIER LAVEUSE CM
20	301317	ENGLISH OPERATION INSTR.PLATE	PLACA INSTR.FUNCION. IN.	PLAQUE INST.FONCTION ANGLAIS
	301325	SPANISH OPERATION INSTR.PLATE	PLACA INSTR.FUNCION. ES.	PLAQUE INST.FONCTION ESPAGNOL
	301333	FRENCH OPERATION INSTR.PLATE	PLACA INSTR.FUNCION. FR.	PLAQUE INST.FONCTION FRANCAIS
	301341	GERMAN OPERATION INSTR.PLATE	PLACA INSTR.FUNCION. AL.	PLAQUE INST.FONCTION ALLEMAND
	301358	ITALIAN OPERATION INSTR.PLATE	PLACA INSTR.FUNCION. IT.	PLAQUE INST.FONCTION ITALIEN
	301366	PORTUGUESE OPERATION INST.PLAT	PLACA INSTR.FUNCION. PO.	PLAQUE INST.FONCTION PORTUGAIS

info@zipnasklade.ru
8(800)500-69-51

Nº	REF.	DENOMINATION	DENOMINACIÓN	DÉNOMINATION
	301374	DUTCH OPERATION INSTR.PLATE	PLACA INSTR.FUNCION. HO.	PLAQUE INST.FONCTION HOLLAND.
	301382	DANISH OPERATION INSTR.PLATE	PLACA INSTR.FUNCION. DA.	PLAQUE INST.FONCTION DANOIS
	301390	FINNISH OPERATION INSTR.PLATE	PLACA INSTR.FUNCION. FI.	PLAQUE INST.FONCTION FINLAND
	301408	NORWEGIAN OPERATION INSTR.PLAT	PLACA INSTR.FUNCION. NO.	PLAQUE INST.FONCTION NORVÉGE
	301416	SWEDISH OPERATION INSTR.PLATE	PLACA INSTR.FUNCION. SU.	PLAQUE INST.FONCTION SUÉDOIS
	301424	GREEK OPERATION INSTR.PLATE	PLACA INSTR.FUNCION. GR.	PLAQUE INST.FONCTION GREC
	301432	JAPENESE OPERATION INSTR.PLATE	PLACA INSTR.FUNCION. JA.	PLAQUE INST.FONCTION JAPONAIS
21	301069	ENGLISH SAFETY INSTR.PLATE	PLACA INSTR.SEGURIDAD IN.	PLAQUE INSTR.SECURITE ANGLAIS
	301077	SPANISH SAFETY INSTR.PLATE	PLACA INSTR.SEGURIDAD ES.	PLAQUE INSTR.SECURITE ESPAGNOL
	301085	FRENCH SAFETY INSTR.PLATE	PLACA INSTR.SEGURIDAD FR.	PLAQUE INSTR.SECURITE FRANCAIS
	301093	GERMAN SAFETY INSTR.PLATE	PLACA INSTR.SEGURIDAD AL.	PLAQUE INSTR.SECURITE ALLEMAND
	301101	ITALIAN SAFETY INSTR.PLATE	PLACA INSTR.SEGURIDAD IT.	PLAQUE INSTR.SECURITE ITALIEN
	301119	PORTUGUESE SAFETY INSTR.PLATE	PLACA INSTR.SEGURIDAD PO.	PLAQUE INST.SECURITE PORTUGAIS
	301127	DUTCH SAFETY INSTR.PLATE	PLACA INSTR.SEGURIDAD HO.	PLAQUE INSTR.SECURITE HOLLAND.
	301135	DANISH SAFETY INSTR.PLATE	PLACA INSTR.SEGURIDAD DA.	PLAQUE INSTR.SAFETY DANOIS
	301143	FINNISH SAFETY INSTR.PLATE	PLACA INSTR.SEGURIDAD FI.	PLAQUE INSTR.SECURITE FINLAND.
	301150	NORWEGIAN SAFETY INSTR.PLATE	PLACA INSTR.SEGURIDAD NO.	PLAQUE INST.SECURITE NORVÉGIEN
	301168	SWEDISH SAFETY INSTR.PLATE	PLACA INSTR.SEGURIDAD SU.	PLAQUE INSTR.SECURITE SUÉDOIS
	301176	GREEK SAFETY INSTR.PLATE	PLACA INSTR.SEGURIDAD GR.	PLAQUE INSTR.SECURITE GREC
	301184	JAPENESE SAFETY INSTR.PLATE	PLACA INSTR.SEGURIDAD JA.	PLAQUE INSTR.SECURITE JAPONAIS
23	278333	COIN METER PLATE (EXCEPT GREENWALD COIN METER)	PLACA MONEDERO (EXCEPTO MONEDERO GREENWALD)	PLAQUE MONNAYEUR (SAUF MONNAYEUR GREENWALD)
24	281162	COIN-METER PLATE (FOR GREENWALD COIN-METER)	PLACA MONEDERO (PARA MONEDERO GREENWALD)	PLAQUE MONNAYEUR (POUR MONNAYEUR GREENWALD
25	130831	COIN-METER B-400 TOKEN GIRBAU	MONEDERO ISMEA B-400 FICHA G.	MONNAYEUR B-400 JETON GIRBAU
		OTHER COIN-METERS B-400 (TO SPECIFY COIN)	OTROS MONEDEROS B-400 (ESPECIFICAR MONEDA)	AUTRES MONNAYEURS B-400 (SPECIFIER MONNAI)
	182295	COIN-METER ELECTROMAGNET B-400	ELECT.MONE.ISMEA B400 220V ZZ	ELECTROAIMANT MONNAYEUR B-400
	177022	COIN-METER MICROSWITCH B400	MICRORRUP.MONEDERO ISMEA B400	MICRORRUPTEUR MONNAYEUR B400
26	147710	TOKEN GIRBAU 24R15	FICHA 24R15 CON ANAGRAM.GIRBAU	JETON GIRBAU 24R15
27	149476	BICR.WASHER B DIN125-ST 4,3	ARAN.B DIN125-ST BICR. 4,3	RONDELLE B DIN125-ST BICR.4,3

info@zipnasklade.ru
8(800)500-69-51

Nº	REF.	DENOMINATION	DENOMINACIÓN	DÉNOMINATION
28	258665	COIN BOX PLATE	CARATULA CAJON MONEDAS	PLAQUE BOITE MONNAIES
29	280768	BOX BRACKET FIXING	SUJECION APOYO CAJON	FIXATION APPUI BOITE
30	161646	ALLEN SCREW DIN 912 M-4X8	TOR.ALLDIN912-8.8 BICR.M 4X 8	VIS ALLEN DIN 912 M-4X8
31	281170	BOX SUPPORT (EXCEPT GREENWALD COIN METER)	APOYO CAJON (EXCEPTO MONEDERO GREENWALD)	APPUI BOITE (SAUF MONNAYEUR GREENWALD)
32	284083	BOX SUPPORT (FOR GREENWALD COIN-METER)	APOYO CAJON RECOGEMONEDAS (PARA MONEDERO GREENWALD)	APPUI BOX (POUR MONNAYEUR GREENWALD
33	284208	COIN-METER MICROSWITCH (FOR GREENWALD COIN-METER)	MICRORRUPTOR MONEDERO (PARA MONEDERO GREENWALD)	MICRORRUPTEUR MONNAYEUR (POUR MONNAYEUR GREENWALD
34	244327	MICROSWITCH ISOLATION	AISLANTE MICRORRUPTOR	ISOLANT MICRORRUPTEUR
35	146050	BICR CYL SCREW DIN84 M-3X20	TOR.CIL.DIN84-4.8 BICR.M 3X20	VIS CYL BICR DIN84-4.8 M 3X20
36	149484	BICR.WASHER B DIN125-ST 3,2	ARAN.B DIN125-ST BICR. 3,2	RONDELLE B.DIN125-ST BICR. 3,2
37	149906	INOX. HEX. NUT DIN 934 M-3	TUER.EX.DIN934 INOX A2-70 M 3	ECROU HEX. INOX DIN934 M-3
38	169169	COIN BOX UG400A GI	CAJA MONEDAS UG400A GI	BOITE MONNAIE UG400A GI
39	279745	PUSH-BUTTON PLATE	PLACA PULSADOR	PLAQUE PULSATEUR
40	138339	PUSH-BUTTON 2WIXII/5518	PULSADOR 2WIXII/5518	BOUTON-POUSSOIR 2WIXII/5518
41	160101	THERMOSTAT INTAKE STOPPER	TAPON TOMA TERMOSTATO	BOUCHON PRISE THERMOSTAT

info@zipnasklade.ru
8(800)500-69-51

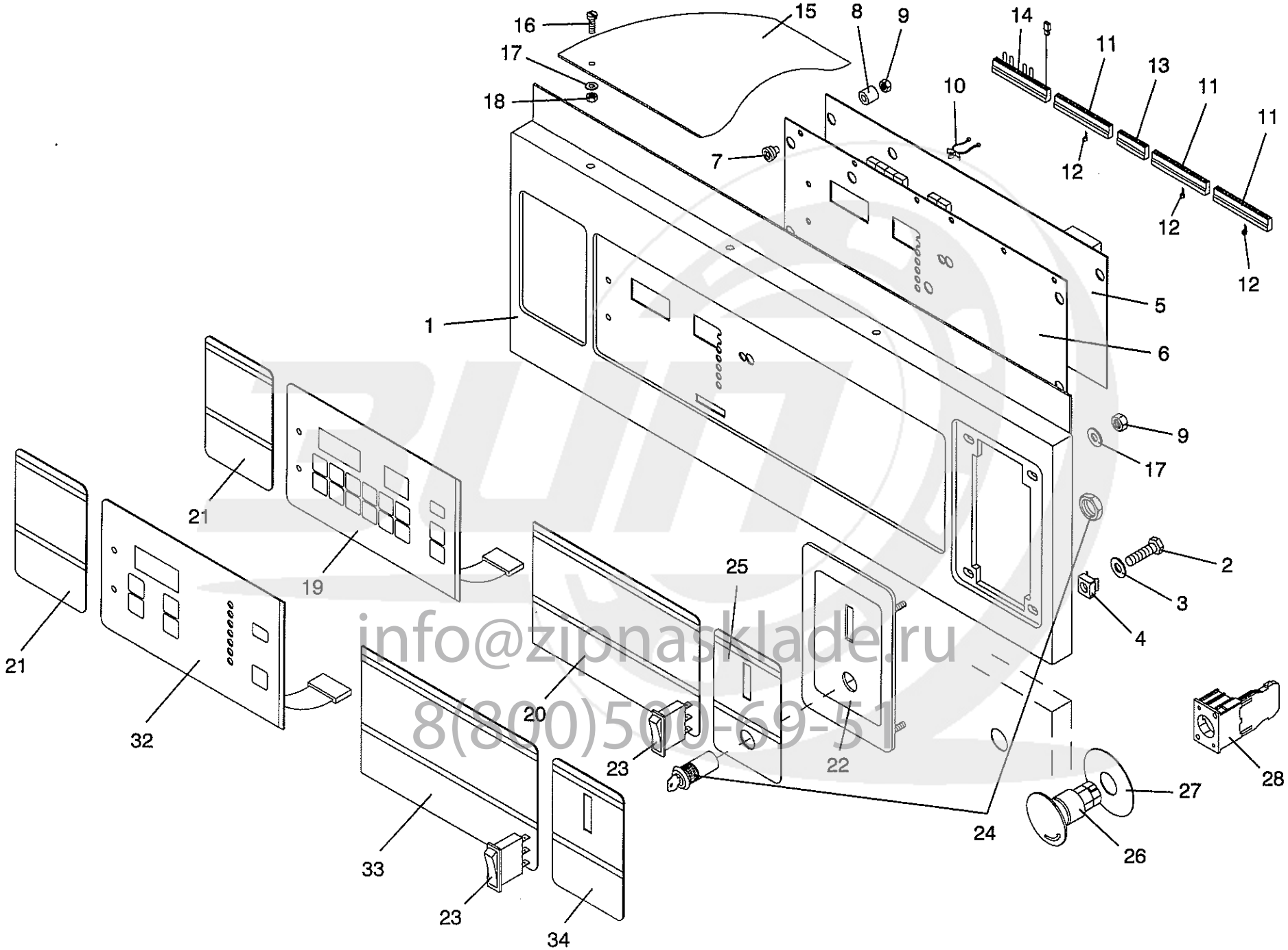

info@zipnasklade.ru
8(800)500-69-51

HS-3007

7

U-12265

Nº	REF.	DENOMINATION	DENOMINACIÓN	DÉNOMINATION
1	280644	CONTROL PANEL	PANEL DE MANDOS	TABLEAU DE COMMANDES
2	144881	INOX HEX SCREW DIN933 M 6X15	TOR.EX.DIN933INOX A2-70 M 6X16	VIS HEX INOX DIN933 M 6X15
3	149310	INOX.A2 WASHER DIN125 6,4	ARAN. DIN125 INOX A2 6,4	RONDELLE INOX.A2 DIN125 6,4
4	165019	CAGED NUT M-6 0,5-1,5	TUER.ENJ.M6 0,5-1,5 R.310007-9	ECROU PRESIONER M-6 0,5-1,5
5	300806	PROCESSOR BOARD PM (FOR PM)	PLACA MICROPROCESADOR PM (PARA PM)	PLAQUE MICROPROCESSEUR PM (POUR PM)
	300798	PROCESSOR BOARD SM/CM (FOR SM)	PLACA MICROPROCESADOR SM/CM (PARA SM)	PLAQUE MICROPROCESSEUR SM/CM (POUR SM)
	303347	EPROM FOR WASHER PM3 VER05 (FOR PM)	EPROM LAVADORAS PM3 VER05 (PARA PM)	EPROM POUR MACH.A LAVER PM3 V4 (POUR PM)
	303354	EPROM FOR WASHER SM3/CM3 VER8 (FOR SM)	EPROM LAVADORAS SM3/CM3 VER08 (PARA SM)	EPROM P.MACH.A LAVER SM3/CM3V8 (POUR SM)
	187195	RAM ZERO POWER MK48Z08-10 (FOR PM)	RAM ZERO POWER MK48Z08-10 (PARA PM)	RAM ZERO POWER MK48Z08-10 (POUR PM)
	303933	EEPROM ST24C04 (FOR SM)	EEPROM ST24C04 (PARA SM)	EEPROM ST24C04 (POUR SM)
	187203	INPUT OPTOISOLATOR 4N26	OPTOACOPLADOR ENTRADA 4N26	OPTOISOLATOR ENTREE 4N26
	187211	OUTPUT OPTOISOLATOR S21MD4V	OPTOACOPLADOR SALIDA	OPTOISOLATOR SORTIE S21MD4V
	188003	DISPLAY TDSR 5160	DISPLAY TDSR 5160	DISPLAY TDSR 5160
6	278317	PROCESSOR ISOLATOR	AISLANTE MICROPROCESADOR	ISOLANT MICROPROCESSEUR
7	277392	PLATE-CONTROL SEPARATOR	SEPARADOR PANEL-PLACA	SEPARATEUR TABLEAU-PLAQUE
8	277400	NUT-PLATE SEPARATOR	SEPARADOR PLACA-TUERCA	SEPARATEUR PLAQUE-ECROU
9	150185	BICR.HEX.NUT DIN934-8 M4	TUER.EX.DIN934-8 BICR.M 4	ECROU HEX.DIN934-8 BICR.M4
10	199893	CLAMP STL-450-3-01	ABRAZADERA STL-450-3-01	BRIDE STL-450-3-01
11	197301	PROTECTOR AMP-UNYT 1-640029-6	PROTECTOR AMP-UNYT 1-640029-6	PROTECTEUR AMP-UNYT 1-640029-6
12	197426	POLARIZATION AMP 640180-1	POSICIONADOR AMP 640180-1	POLARIZATION AMP 640180-1
13	199810	PROTECTOR AMP-UNYT 640029-8	PROTECTOR AMP-UNYT 640029-8	PROTECTEUR AMP-UNYT 640029-8
14	279141	IDENTIFICATION PLUG (FOR PM)	CONECTORA IDENTIFICACION (PARA PM)	CONNECTEUR IDENTIFICATION (POUR PM)
	279133	IDENTIFICATION PLUG (FOR SM)	CONECTORA IDENTIFICACION (PARA SM)	CONNECTEUR IDENTIFICATION (POUR SM)
15	258277	PROCESSOR BOARD LID	TAPA PLACA MICROPROCESADOR	COUVERCLE PLAQ.MICROPROCESSEUR
16	145649	INOX FLAT SCREW DIN85 M 4X10	TOR.PLA.DIN85 INOX A2-70 M4X10	VIS PLAT INOX DIN85 M-4X10 A2
17	219758	WASHER 12X4X1,5	ARANDELA 12X4X1,5	RONDELLE 12X4X1,5

info@zipnasklade.ru
8(800)500-69-51

Nº	REF.	DENOMINATION	DENOMINACIÓN	DÉNOMINATION
18	132043	SELFBLOCKING NUT DIN985 M 4	TUER.AUTOBL.DIN985-8 BICR.M 4	ECROU AUTOBLOCANT DIN985 M 4
19	300673	WASHER KEYBOARD PM (FOR PM)	TECLADO LAVADORA PM (PARA PM)	CLAVIER LAVEUSE PM (POUR PM)
20	301440	ENGLISH OPERATION INSTR.PLATE (FOR PM)	PLACA INSTR.FUNCION. IN. (PARA PM)	PLAQUE INSTR.FONCTION ANGLAIS (POUR PM)
	301457	SPANISH OPERATION INSTR.PLATE (FOR PM)	PLACA INSTR.FUNCION. ES. (PARA PM)	PLAQUE INSTR.FONCTION ESPAGNOL (POUR PM)
	301465	FRENCH OPERATION INSTR.PLATE (FOR PM)	PLACA INSTR.FUNCION. FR. (PARA PM)	PLAQUE INSTR.FONCTION FRANCAIS (POUR PM)
	301473	GERMAN OPERATION INSTR.PLATE (FOR PM)	PLACA INSTR.FUNCION. AL. (PARA PM)	PLAQUE INSTR.FONCTION ALLEMAND (POUR PM)
	301481	ITALIAN OPERATION INSTR.PLATE (FOR PM)	PLACA INSTR.FUNCION. IT. (PARA PM)	PLAQUE INSTR.FONCTION ITALIEN (POUR PM)
	301499	PORTUGUESE OPERATION INST.PLAT (FOR PM)	PLACA INSTR.FUNCION. PO. (PARA PM)	PLAQUE INST.FONCTION PORTUGAIS (POUR PM)
	301507	DUTCH OPERATION INSTR.PLATE (FOR PM)	PLACA INSTR.FUNCION. HO. (PARA PM)	PLAQUE INSTR.FONCTION HOLLAND. (POUR PM)
	301515	DANISH OPERATION INSTR.PLATE (FOR PM)	PLACA INSTR.FUNCION. DA. (PARA PM)	PLAQUE INSTR.FONCTION DANOIS (POUR PM)
	301523	FINNISH OPERATION INSTR.PLATE (FOR PM)	PLACA INSTR.FUNCION. FI. (PARA PM)	PLAQUE INSTR.FONCTION FINLAND. (POUR PM)
	301531	NORWEGIAN OPERATION INSTR.PLAT (FOR PM)	PLACA INSTR.FUNCION. NO. (PARA PM)	PLAQUE INSTR.FONCTION NORVÉG. (POUR PM)
	301549	SWEDISH OPERATION INSTR.PLATE (FOR PM)	PLACA INSTR.FUNCION. SU. (PARA PM)	PLAQUE INSTR.FONCTION SUÉDOIS (POUR PM)
	301556	GREEK OPERATION INSTR.PLATE (FOR PM)	PLACA INSTR.FUNCION. GR. (PARA PM)	PLAQUE INSTR.FONCTION GREC (POUR PM)
	301564	JAPENESE OPERATION INSTR.PLATE (FOR PM)	PLACA INSTR.FUNCION. JA. (PARA PM)	PLAQUE INSTR.FONCTION JAPONAIS (POUR PM)
21	301069	ENGLISH SAFETY INSTR.PLATE	PLACA INSTR.SEGURIDAD IN.	PLAQUE INSTR.SECURITE ANGLAIS
	301077	SPANISH SAFETY INSTR.PLATE	PLACA INSTR.SEGURIDAD ES.	PLAQUE INSTR.SECURITE ESPAGNOL
	301085	FRENCH SAFETY INSTR.PLATE	PLACA INSTR.SEGURIDAD FR.	PLAQUE INSTR.SECURITE FRANCAIS
	301093	GERMAN SAFETY INSTR.PLATE	PLACA INSTR.SEGURIDAD AL.	PLAQUE INSTR.SECURITE ALLEMAND
	301101	ITALIAN SAFETY INSTR.PLATE	PLACA INSTR.SEGURIDAD IT.	PLAQUE INSTR.SECURITE ITALIEN
	301119	PORTUGUESE SAFETY INSTR.PLATE	PLACA INSTR.SEGURIDAD PO.	PLAQUE INST.SECURITE PORTUGAIS
	301127	DUTCH SAFETY INSTR.PLATE	PLACA INSTR.SEGURIDAD HO.	PLAQUE INSTR.SECURITE HOLLAND.
	301135	DANISH SAFETY INSTR.PLATE	PLACA INSTR.SEGURIDAD DA.	PLAQUE INSTR.SAFETY DANOIS

info@zipnasklade.ru
8(800)500-69-51

Nº	REF.	DENOMINATION	DENOMINACIÓN	DÉNOMINATION
	301143	FINNISH SAFETY INSTR.PLATE	PLACA INSTR.SEGURIDAD FI.	PLAQUE INSTR.SECURITE FINLAND.
	301150	NORWEGIAN SAFETY INSTR.PLATE	PLACA INSTR.SEGURIDAD NO.	PLAQUE INST.SECURITE NORVÉGIEN
	301168	SWEDISH SAFETY INSTR.PLATE	PLACA INSTR.SEGURIDAD SU.	PLAQUE INSTR.SECURITE SUÉDOIS
	301176	GREEK SAFETY INSTR.PLATE	PLACA INSTR.SEGURIDAD GR.	PLAQUE INSTR.SECURITE GREC
	301184	JAPENESE SAFETY INSTR.PLATE	PLACA INSTR.SEGURIDAD JA.	PLAQUE INSTR.SECURITE JAPONAIS
22	277384	MICRO SUPPLEMENT PANEL	PANEL SUPLEMENTO MICRO.	PANNEAU SUPPLEMENT MICRO
23	300780	SWITCH 1WIXII/3359 WHITE	INTER.PILOTO 1WIXII/3359 BLANC	INTERRUPTEUR 1WIXII/3359 BLANC
24	256230	FUNCTION SWITCH (FOR PM)	CONMUTADOR FUNCIONES (PARA PM)	COMMUTATEUR FONCTIONS (POUR PM)
25	301994	GENERAL CONTROL PLATE (FOR PM)	PLACA MANDOS GENERALES (PARA PM)	PLAQUE COMMANDES GENERALES (POUR PM)
26	192310	MUSHROOM PUSH-BUTTON	PUL.HONGO ENCL.3SB10 (341529)	PULSATEUR TYPE COUP DE POING
27	192294	YELLOW RING	ARO AMARILLO	BAGUE JAUNE
28	197343	CONNECTION ELEMENT 3SB13 20-0A	ELEMENTO CONEXION 3SB13 20-0A	ELEMENT CONNEXION 3SB13 20-0A
32	300699	WASHER KEYBOARD SM (FOR SM)	TECLADO LAVADORA SM (PARA SM)	CLAVIER LAVEUSE SM (POUR SM)
33	301192	ENGLISH OPERATION INSTR.PLATE (FOR SM)	PLACA INSTR.FUNCION. IN. (PARA SM)	PLAQUE INSTR.FONCTION ANGLAIS (POUR SM)
	301200	SPANISH OPEARATION INSTR.PLATE (FOR SM)	PLACA INSTR.FUNCION. ES. (PARA SM)	PLAQUE INST.FONCTION ESPAGNOL (POUR SM)
	301218	FRENCH OPERATION INSTR.PLATE (FOR SM)	PLACA INSTR.FUNCION. FR. (PARA SM)	PLAQUE INSTR.FONCTION FRANCAIS (POUR SM)
	301226	GERMAN OPERATION INSTR.PLATE (FOR SM)	PLACA INSTR.FUNCION. AL. (PARA SM)	PLAQUE INSTR.FONCTION ALLEMAND (POUR SM)
	301234	ITALIAN OPERATION INSTR.PLATE (FOR SM)	PLACA INSTR.FUNCION. IT. (PARA SM)	PLAQUE INSTR.FONCTION ITALIEN (POUR SM)
	301242	PORTUGUESE OPERATION INST.PLAT (FOR SM)	PLACA INSTR.FUNCION. PO. (PARA SM)	PLAQUE INST.FONCTION PORTUGAIS (POUR SM)
	301259	DUTCH OPERATION INSTR.PLATE (FOR SM)	PLACA INSTR.FUNCION. HO. (PARA SM)	PLAQUE INSTR.FONCTION HOLLAND. (POUR SM)
	301267	DANISH OPERATION INSTR.PLATE (FOR SM)	PLACA INSTR.FUNCION. DA. (PARA SM)	PLAQUE INSTR.FONCTION DANOIS (POUR SM)
	301275	FINNISH OPERATION INSTR.PLATE (FOR SM)	PLACA INSTR.FUNCION. FI. (PARA SM)	PLAQUE INSTR.FONCTION FINLAND. (POUR SM)
	301283	NORWEGIAN OPERATION INSTR.PLAT (FOR SM)	PLACA INSTR.FUNCION. NO. (PARA SM)	PLAQUE INSTR.FONCTION NORVÉG. (POUR SM)

info@zipnasklade.ru
8(800)500-69-51

Nº	REF.	DENOMINATION	DENOMINACIÓN	DÉNOMINATION
	301291	SWEDISH OPERATION INSTR.PLATE (FOR SM)	PLACA INSTR.FUNCION. SU. (PARA SM)	PLAQUE INSTR.FONCTION SUÉDOIS (POUR SM)
	301309	GREEK OPERATION INSTR.PLATE (FOR SM)	PLACA INSTR.FUNCION. GR. (PARA SM)	PLAQUE INSTR.FONCTION GREC (POUR SM)
34	301986	START-STOP PLATE (FOR SM)	PLACA MARCHA PARO (PARA SM)	PLAQUE MARCHE-ARRET (POUR SM)

info@zipnasklade.ru
8(800)500-69-51

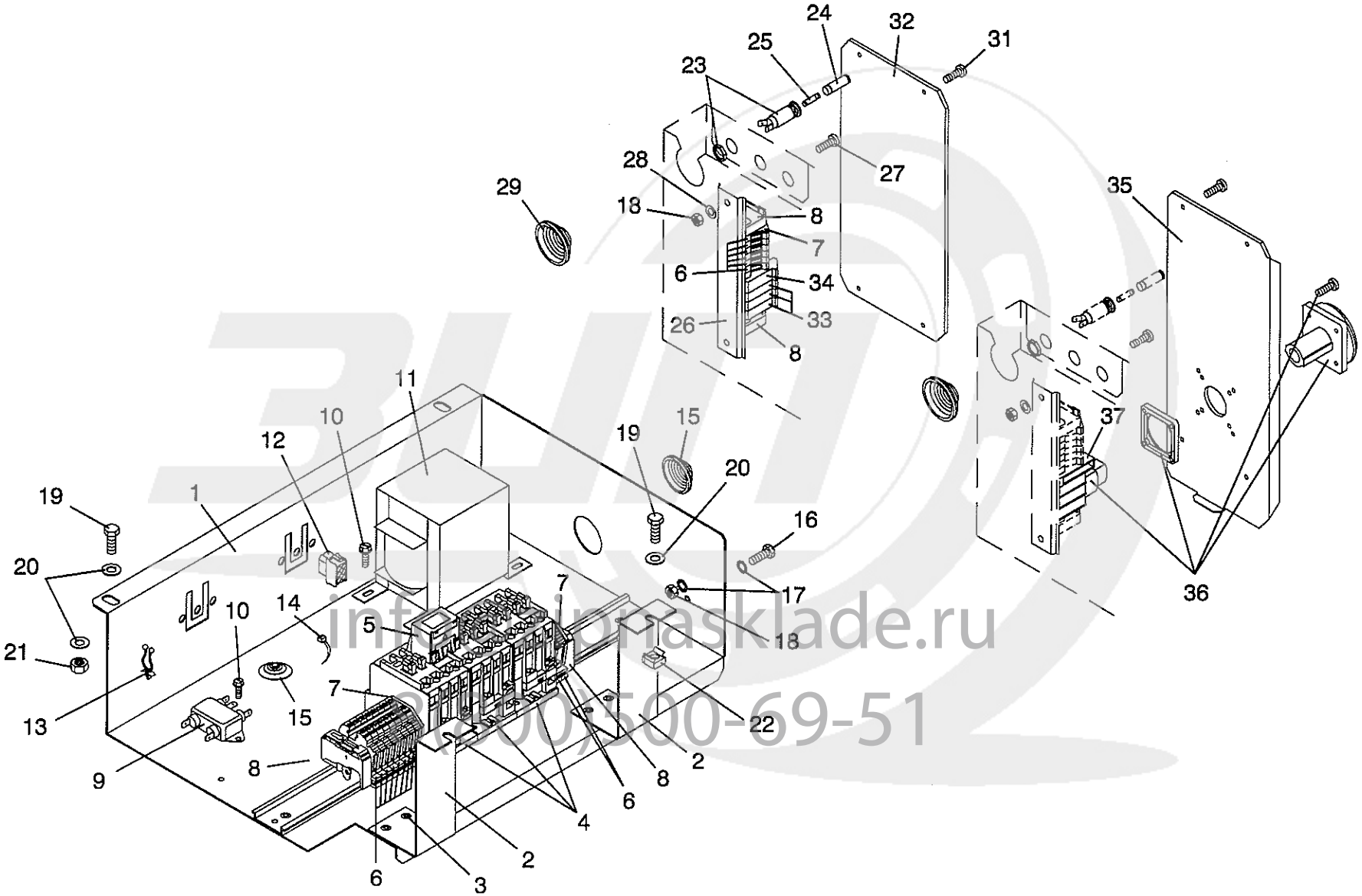

info@alphasklade.ru
8(800)500-69-51

Nº	REF.	DENOMINATION	DENOMINACIÓN	DÉNOMINATION
1	271742	INSTALLATION BOX PLATE	PLACA CAJA INSTALACION	PLAQUE BOITE INSTALLATION
2	276550	INSTALLATION BOX BRACKET	SOPORTE CAJA INSTALACION	SUPPORT BOITE INSTALLATION
3	151878	RIVET POP TLP/D/636/BS4,8X 9,1	REMA.POP TLP/D/636/BS 4,8X 9,1	RIVET TLP/D/636/BS 4,8X 9,1
4	193441	CONTACTOR 3TF30 01-OAN2	CONTACTOR 3TF30 01-OAN2	CONTACTEUR 3TF30 01-OAN2
	194050	COIL 3TY7 403-OAN2	BOBINA 3TY7 403-OAN2	BOBINE 3TY7 403-OAN2
5	196592	CONTACT BLOCK 3TX4 091-1A	BLOQUEO 3TX4 091-1A	BLOC CONTACT 3TX4 091-1A
6	155457	TERMINAL BC 4/6 R 638255	BORNA CIAMA BC 4/6 R 638255	BORNE BC 4/6 R 638255
7	155275	END COVER FC2 5/10	TAPA FIN.CIAMA FC2.5/10 635455	COUVERCLE FINAL FC2.5/10
8	142331	FIXING CLAMP	TOPE FIJAC.S/BORDES R.LEG39400	BRIDE FIXATION
9	199836	FILTER FRI FA-1Z	FILTRO DE RED RFI TIPO FA-1Z	FILTRE RFI FA-1Z
10	183400	CYL.PLATE SCREW ST-4 20 C/AL	TOR.CHAPA ST-4 20 C/AL.T25	VIS PLAQUE CYL.ST-4 20 C/AL
11	300756	TRANSFORMER IP00 100 VA (FOR 220 AND 380V)	TRANSFORMADOR IP00 100 VA (PARA 220 Y 380V)	TRANSFORMATEUR IP00 100 VA (POUR 220 ET 380V)
	300772	TRANSFORMER IP00 100 VA (FOR 200,240 AND 415V)	TRANSFORMADOR IP00 100 VA (PARA 200,240 Y 415V)	TRANSFORMATEUR IP00 100 VA (POUR 200,240 ET 415V)
	300764	TRANSFORMER IP00 100 VA (FOR 208 AND 440V)	TRANSFORMADOR IP00 100 VA (PARA 208 Y 440V)	TRANSFORMATEUR IP00 100 VA (POUR 208 ET 440V)
12	139444	PROTECTOR 1/480705-0	PROTECTOR 1/480705-0	PROTECTEUR 1/480705-0
13	199893	CLAMP STL-450-3-01	ABRAZADERA STL-450-3-01	BRIDE STL-450-3-01
14	140434	CLAMP 2221	BRIDA UNEX 2221	BRIDE 2221
15	181701	LEGRAND CONE 91911	CONO LEGRAND 91911	CONE LEGRAND 91911
16	146282	BICR.HEX SCREW DIN933-8 M 5X15	TOR.EX.DIN933-8.8 BICR.M 5X 15	VIS HEX BICR.DIN933-8.8 M 5X15
17	149724	BICR EXT.TOOT.WASH.DIN6798 M5	ARAN.DEN.EXTER.BICR.DIN6798M 5	RONDEL DEN.EX.BICR.DIN6798 M5
18	150177	BICR HEX NUT DIN934-8 M5	TUER.EX.DIN934-8 BICR.M 5	ECROU HEX DIN934-8 BIC.M5
19	146233	BICR.HEX SCREW DIN933-8 M6X15	TOR.EX.DIN933-8.8 BICR.M 6X 15	VIS HEX DIN933-8.8 BICR.M6X15
20	149526	BICR.WASHER B DIN125-ST 6,4	ARAN.B DIN125-ST BICR. 6,4	RONDELLE B DIN125-ST BICR.6,4
21	150227	BICR HEX NUT DIN934-8 M6	TUER.EX.DIN934-8 BICR.M 6	ECROU HEX DIN934-8 BICR.M6
22	165019	CAGED NUT M-6 0,5-1,5	TUER.ENJ.M6 0,5-1,5 R.310007-9	ECROU PRESIONER M-6 0,5-1,5
23	160119	FUSE HOLDER REF.FEC 031 1631	PORTAFUSIBLES REF.FEC.031.1631	PORTE-FUSIBLE REF.FEC 031 1631
24	192286	BAYONET HEAD (FOR FUSE 5X20)	CABEZA BAYONETA FEK.031.1611 (PARA CARTUCHO 5X20)	TETE BAYONETTE (POUR CARTOUCHE 5X20)

info@zipnasklade.ru
8(800)500-69-51

Nº	REF.	DENOMINATION	DENOMINACIÓN	DÉNOMINATION
	137661	BAYONET HEAD (FOR FUSE 6X32)	CABEZA BAYONETA FEK.031.1613 (PARA CARTUCHO 6X32)	TETE BAYONETTE (POUR CARTOUCHE 6X32)
25	302612	FUSE FSD 0034.3987 1A (FOR FUSE 5X20)	CART.FUSIB.FSD 0034.3987 1 A (PARA CARTUCHO 5X20)	CARTOUCHE FUSIBLE FSD 0034 1A (POUR CARTOUCHE 5X20)
	182485	FUSE FST 0034.5225 1A (FOR FUSE 6X32)	CART.FUSIB.FST 0034.5225 1 A (PARA CARTUCHO 6X32)	CARTOUCHE FUS.FST 0034.5225 1A (POUR CARTOUCHE 6X32)
26	245571	CONTACTOR FIXING PROFILE	PERFIL FIJACION CONTACTORES	PROFILE FIXATION CONTACTEURS
27	146175	BICR CYL SCREW DIN84-4 M-5X10	TOR.CIL.DIN84-4.8 BICR.M 5X10	VIS CYL BICR DIN84-4.8.M-5X10
28	149534	BICR.WASHER B DIN125-ST 5,3	ARAN.B DIN125-ST BICR. 5,3	RONDELLE B BICR.DIN125-ST 5,3
29	139683	CONE ECPC-6	CONO HIMEL ECPC-6	CONE ECPC-6
31	146084	BICR CYL SCREW DIN84 M 4X 10	TOR.CIL.DIN84-4.8 BICR.M 4X10	VIS CYL BICR DIN84-4.8 M 4X 10
32	279836	CURRENT INPUT COVER (WITHOUT SWITCH DISCONNECTOR)	TAPA ENTRADA CORRIENTE (SIN INTERRUPTOR SECCIONADOR)	COUVERCLE ENTRÉE DE COURANT (SANS INTERRUPTEUR SECTIONNER)
33	155465	TERMINAL BC 10/16R 638455 (WITHOUT SWITCH DISCONNECTOR)	BORNA CIAMA BC 10/16R 638455 (SIN INTERRUPTOR SECCIONADOR)	BORNE BC 10/16R 638455 (SANS INTERRUPTEUR SECTIONNER)
34	193425	TERMINAL BCT 10 631912 (WITHOUT SWITCH DISCONNECTOR)	BORNA CIAMA BCT 10 631912 (SIN INTERRUPTOR SECCIONADOR)	BORNE BCT 10 631912 (SANS INTERRUPTEUR SECTIONNER)
35	277582	CURRENT INPUT COVER (WITH SWITCH DISCONNECTOR)	TAPA ENTRADA CORRIENTE (CON INTERRUPTOR SECCIONADOR)	COUVERCLE ENTRÉE DE COURANT (AVEC INTERRUPTEUR SECTIONNER)
36	198861	GRAL.SWITCH P1-25/V/SVB (WITH SWITCH DISCONNECTOR)	INTERRUPT.GENERAL P1-25/V/SVB (CON INTERRUPTOR SECCIONADOR)	INTERRUPTEUR GRAL.P1-25/V/SVB (AVEC INTERRUPTEUR SECTIONNER)
37	300400	AUX.CONTACT. HI11.P1/P3Z (WITH SWITCH DISCONNECTOR)	CONTACTO AUXILIAR HI11-P1/P3Z (CON INTERRUPTOR SECCIONADOR)	CONTACT.AUX.HI11-P1/P3Z (AVEC INTERRUPTEUR SECTIONNER)

info@zipnasklade.ru
8(800)500-69-51

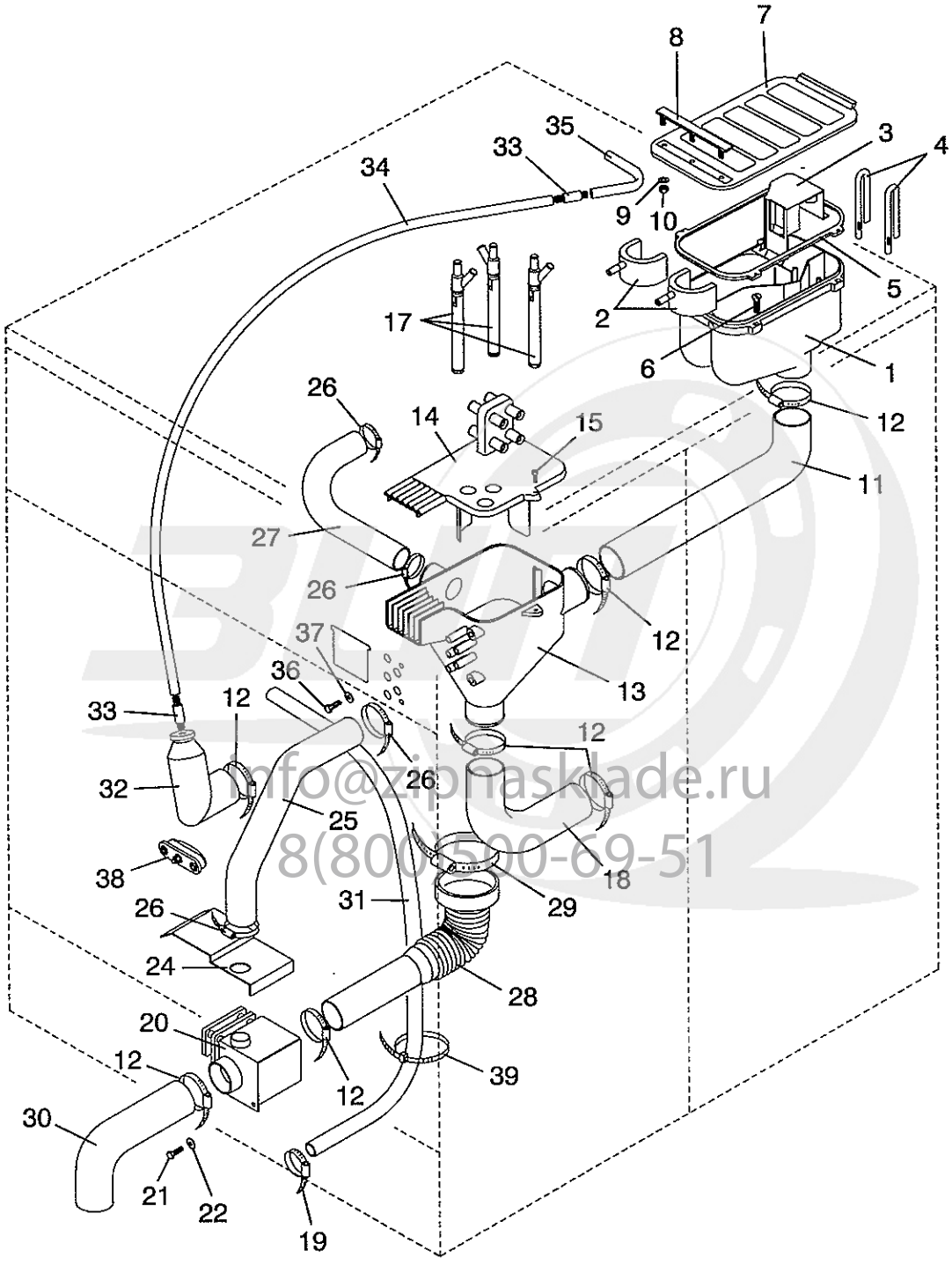

info@zipnasklade.ru
8(800)500-69-51

Nº	REF.	DENOMINATION	DENOMINACIÓN	DÉNOMINATION
1	187385	SOAP DISPENSER	DOSIFICADOR	BAC A PRODUITS
2	187419	WATER INLET	ENTRADA AGUA	ENTREE EAU
3	187427	SOAP DISPENSER HOOD	CAPUCHON DOSIFICADOR	POCHE BAC A PRODUITS
4	187435	ASPIRATION HOSE	TUBO ASPIRACION	TUBE ASPIRATION
5	246298	SOAP DISPENSER GASKET	JUNTA DOSIFICADOR	JOINT BACS A PRODUITS
6	144741	INOX SCREW DIN 963 M-5X15 A270	TOR.AV.DIN963 INOX A2-70 M5X16	VIS INOX. DIN 963 M-5X15 A2-70
7	189951	SOAP DISPENSER LID	TAPA DOSIFICADOR	COUVERCLE BAC A PRODUITS
8	261420	SOAP DISPENSER LID FIX.PIECE	SOLAPA TAPA DOSIFICADOR	PIECE FIXATION COUVERCLE BAC
9	149369	INOX A2 WASHER DIN 125 5,3	ARAN. DIN125 INOX A2 5,3	RONDELLE INOX A2 DIN 125 5,3
10	176826	SELF-BLOCKING NUT DIN 985 M-5	TUER.AUTOBL.DIN985-8 BICR.M 5	ECROU AUTOBLOCANT DIN 985 M-5
11	277426	RUBBER ELBOW D58X305X145	CODO GOMA D58X305X145	COUDE GOMME D58X305X145
12	132290	CLAMP 301508-9 D50-70	ABRAZ.ASFA-S W2 50-70 301706-8	BRIDE 301508-9 D50-70
13	300061	DISTRIBUTOR BODY	CUERPO DISTRIBUIDOR	CORPS DISTRIBUTEUR
14	300186	DISTRIBUTOR COVER	TAPA DISTRIBUIDOR	COUVERCLE DISTRIBUTEUR
15	166645	CYL.PLATE SCREW DIN7971 8X5/8"	TOR.CHAPA CILI.DIN7971 8X5/8"	VIS PLAQUE CIL.DIN7971 8X5/8"
17	199885	WATER INLET RACCORD	RACOR ENTRADA AGUA	RACCORD ENTREE EAU
18	199927	RUBBER ELBOW D60X175X150	CODO GOMA D60X175X150	COUDE GOMME D60X175X150
19	156109	CLAMP 301503-8 D16-25	ABRAZ.ASFA 16-27L REF.301653-2	BRIDE 301503-8 D16-25
20	251835	DRAIN (OPEN WITHOUT POWER)	DESAGUE(ABIERTO A F.DE CORR.)	VIDANGE (NORMALEMENT OUVERTE)
	159764	MOTOR AND GEAR-BOX RE. 453R	MOTOR-REDUCTOR 453R 0,24AMP.	MOTEUR ET REDUCTEUR REF. 453R
	159731	OPERATING SPRING RE.408L	MUELLE ACCIONAMIENTO REF.408L	RESSORT ACTIONNEMENT REF. 408L
	163394	TIGHTNESS SEAL RE. 311VP	RETEN ESTANQUEIDAD REF.VP311	RESERVE ETACHEITE REF. 311VP
	132530	DRAIN BODY RE 811-SO 2"	CUERPO DESAGUE REF.811-SO 2"	CORPS VIDANGE REF. 811-SO 2"
	166553	MOTOR FIXING PLATE REF. 304Z	PLACA FIJACION MOTOR REF.304Z	PLAQUE FIXATION MOTEUR 304Z
	166611	MOTOR FIXING PLATE SCREW	TORNILLO PLACA FIJAC.REF.306	VIS PLAQUE FIXATION MOTEUR
	166595	MOTOR PLATE FIXING SCREW 320C	TORNILLO FIJACION REF.320C	VIS FIXATION 320C
	166603	CYL PLATE SCREW DIN7971 8X2"	TOR.CHAPA CILI.DIN7971 8X2"	VIS PLAQUE CYL DIN7971 8X2"
	166587	OPERATING SHAFT REF. 713	EJE ACCIONAMIENTO REF.713	AXE ACTIONNEMENT REF. 713
	166629	OPERATIN SHAFT WASHER 823	ARANDELA EJE ACCIONAM. REF.823	RONDELLE AXE ACTIONNEMENT 823
21	146233	BICR.HEX SCREW DIN933-8 M6X15	TOR.EX.DIN933-8.8 BICR.M 6X 15	VIS HEX DIN933-8.8 BICR.M6X15

info@zipnasklade.ru
8(800)500-69-51

Nº	REF.	DENOMINATION	DENOMINACIÓN	DÉNOMINATION
22	149526	BICR.WASHER B DIN125-ST 6,4	ARAN.B DIN125-ST BICR. 6,4	RONDELLE B DIN125-ST BICR.6,4
24	251827	DRAIN PROTECTION	PROTECCION DESAGÜE	PROTECTION VIDANGE
25	265355	VAPOUR OUTLET HOSE	TUBO SALIDA VAHOS	TUBE SORTIE VAPEURS
26	132282	CLAMP 301527-3 D32-50	ABRAZ.ASFA 32-50L REF.301657-5	BRIDE 301527-3 DSA-50
27	199919	RUBBER ELBOW D30X140X120	CODO GOMA D30X140X120	COUDE GOMME D30X140X120
28	260158	DRAIN HOSE	TUBO DESAGUE	TUBE VIDANGE
29	155143	CLAMP 301512-6D110-140	ABRAZ.ASF-SW2 110-130 301712-1	BRIDE 301512-6D110-140
30	128298	RUBBER ELBOW D50X200X300	CODO GOMA D50X200X300	COUDE GOMME D50X200X300
31	283820	BEARING BOX DRAIN HOSE	TUBO DESAGÜE CAJA COJINETES	TUBE VIDANGE BOITE ROULEMENTS
32	120964	PRESSURE SWITCH INTAKE BODY	CUERPO TOMA PRESOSTATO	CORPS PRISE PRESSOSTAT
33	120956	LEVEL PRESSURE-SWITCH INTAKE	TOMA PRESOSTATO NIVEL	PRISE PRESSOSTAT NIVEAU
34	200170 &	PRESSOSTATS HOSE	TUBO PRESOSTATOS	TUBE PRESSOSTATS
35	279588	AIR CONDUCTION HOSE	TUBO CONDUCCION AIRE	TUBE CONDUITE AIR
36	146274	BICR.HEX SCREW DIN933-8 M-5X10	TOR.EX.DIN933-8.8 BICR.M 5X 10	VIS HEX.BICR.DIN933-8.8 M-5X10
37	149534	BICR.WASHER B DIN125-ST 5,3	ARAN.B DIN125-ST BICR. 5,3	RONDELLE B BICR.DIN125-ST 5,3
38	121962	HEATER INLET LID	CIERRE ENTRADA CALEFACTOR	FERMETURE ENTREE RESISTANCE
39	140525	CLAMP 2244-0	BRIDA UNEX 2244-0	BRIDE 2244-0

info@zipnasklade.ru
8(800)500-69-51

&	128199	1 METER RUBBER HOSE D 9X 5	1 METRO TUBO GOMA D 9X 5	1 METRE TUBE GOMME D 9X 5

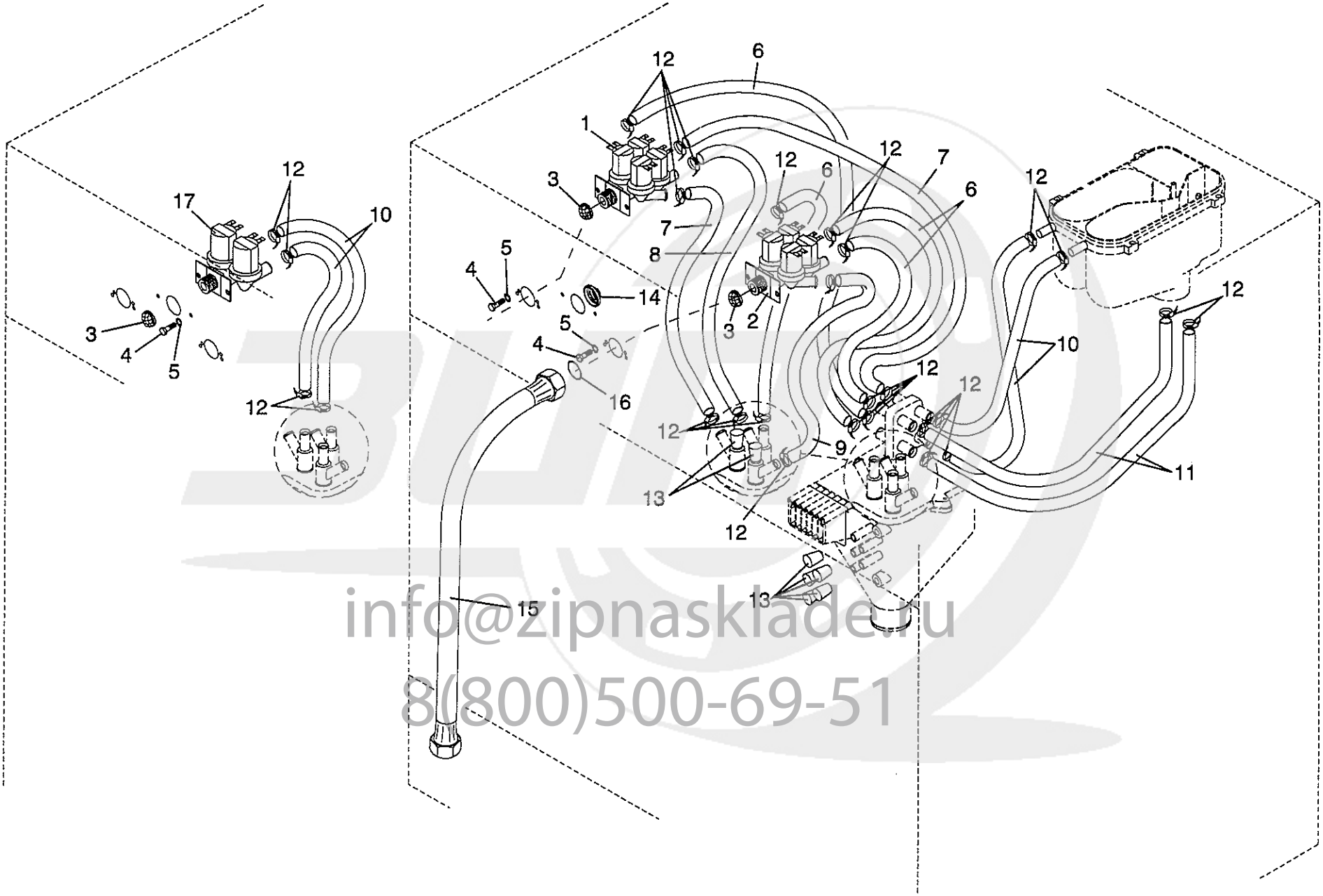

info@zipnasklade.ru
8(800)500-69-51

U-12268

Nº	REF.	DENOMINATION	DENOMINACIÓN	DÉNOMINATION
1	129411	180 DEG. ELECTROVALVE 389A	ELECTROV.CUADRUPLE 389-A 180º	ELECTROVANNE 180 DEG.389A
	192054	ELECT.SERIES 300 COIL 220/240V	BOBINA ELEC.SERIE 300 220/240V	BOBINE ELEC.SERIE 300 220/240V
	300194	YELLOW CASE 30053	ESTUCHE AMARILLO 30053	BOITE JAUNE 30053
	300202	INTEGRAL GUIDE-MEMBRANE 30696	MEMBRANA-GUIA INTEGRAL 30696	MEMBRANE-GUIDE INTEGRALE 30696
2	241026	4-TRACK ELECTROVALVE	ELECTROVALVULA CUATRO VIAS	ELECTROVANNE 4 VOIES
	192054	ELECT.SERIES 300 COIL 220/240V	BOBINA ELEC.SERIE 300 220/240V	BOBINE ELEC.SERIE 300 220/240V
	300194	YELLOW CASE 30053	ESTUCHE AMARILLO 30053	BOITE JAUNE 30053
	300202	INTEGRAL GUIDE-MEMBRANE 30696	MEMBRANA-GUIA INTEGRAL 30696	MEMBRANE-GUIDE INTEGRALE 30696
3	159996	ELECTROVALVE FILTER	FILTRO ELECTROVALVULA ELBI	FILTRE ELECTROVANNE
4	146258	BIC.HEX SCREW DIN933-4.8 M4X10	TOR.EX.DIN933-4.8 BICR.M 4X 10	VIS HEX DIN933-4.8 BICR.M 4X10
5	149476	BICR.WASHER B DIN125-ST 4,3	ARAN.B DIN125-ST BICR. 4,3	RONDELLE B DIN125-ST BICR.4,3
6	259457 &	WATER INLET HOSE	TUBO ENTRADA AGUA	TUBE ENTREE EAU
7	250233 &	WATER INLET HOSE	TUBO ENTRADA AGUA	TUBE ENTREE EAU
8	121137 &	WATER INLET HOSE	TUBO ENTRADA AGUA	TUBE ENTREE EAU
9	278606 &	WATER INLET HOSE	TUBO ENTRADA AGUA	TUBE ENTREE EAU
10	259457 &	WATER INLET HOSE	TUBO ENTRADA AGUA	TUBE ENTREE EAU
11	214403 &	WATER INLET HOSE	TUBO ENTRADA AGUA	TUBE ENTREE EAU
12	155150	CLAMP 301502-0 D12-20	ABRAZ.ASFA 8-16L REF.301651-6	BRIDE 301502-0 D12-20
13	156679	CONICAL END-PIECE R-16 D10	TOPE CONICO REPRIMSA R-16 D10	BOUCHON CONIQUE R-16 D10
14	181701	LEGRAND CONE 91911	CONO LEGRAND 91911	CONE LEGRAND 91911
15	164137	WATER INLET HOSE RACORDS 3/4"	TUBO EPDM 3/4"X1500 C.RACORES	TUBE ENTREE EAU RACCORDS 3/4"
16	114348	GASKET D24XD15X1,5	JUNTA MIFLEX D24X13,5X2	JOINT D24XD15X1,5
17	129379	DOUBLE ELECTROVALVE 349A 180º	ELECTROV.DOBLE 349-A 180º	ELECTROVANNE DOUBLE 349A 180º
	192054	ELECT.SERIES 300 COIL 220/240V	BOBINA ELEC.SERIE 300 220/240V	BOBINE ELEC.SERIE 300 220/240V
	300194	YELLOW CASE 30053	ESTUCHE AMARILLO 30053	BOITE JAUNE 30053
	300202	INTEGRAL GUIDE-MEMBRANE 30696	MEMBRANA-GUIA INTEGRAL 30696	MEMBRANE-GUIDE INTEGRALE 30696

info@zipnasklade.ru
8(800)500-69-51

Nº	REF.	DENOMINATION	DENOMINACIÓN	DÉNOMINATION
		WITHOUT ILLUSTRATION	SIN ILUSTRACION	SANS ILLUSTRATION
		WATER INLET FILTER SUPPLEMENT	SUPLEMENTO FILTRO ENTRADA AGUA	SUPPLEMENT FILTRE ENTREE EAU
	163899	WATER INLET FILTER SET	GRUPO FILTRO ENTRADA AGUA	GROUPE FILTRE ENTREE EAU
	163915	THREADED BRASS FILTER 3/4"	FILTRO LATON FLT ROSC.3/4" 0,5	FILTRE EN LAITON A VIS 3/4"
		METALIC ADAPTOR SUPPLEMENT	SUPLEMENTO ADAPTADOR METALICO	SUPPLÉMENT ADAPTATEUR MÉTALLI.
	299602	WATER INLET SUPPLEMENT	SUPLEMENTO ENTRADA AGUA	SUPPLEMENT ENTREE EAU
	797019	THIRD WATER INLET KIT (FOR PM)	KIT TERCERA ENTRADA AGUA (PARA PM)	KIT TROISIEME ENTREE EAU (POUR PM)
&	128215	1 METER HOSE EPDM D 9X17	1 METRO TUBO EPDM D 9X17	1 METRE TUBE EPDM D 9X17

info@zipnasklade.ru
8(800)500-69-51

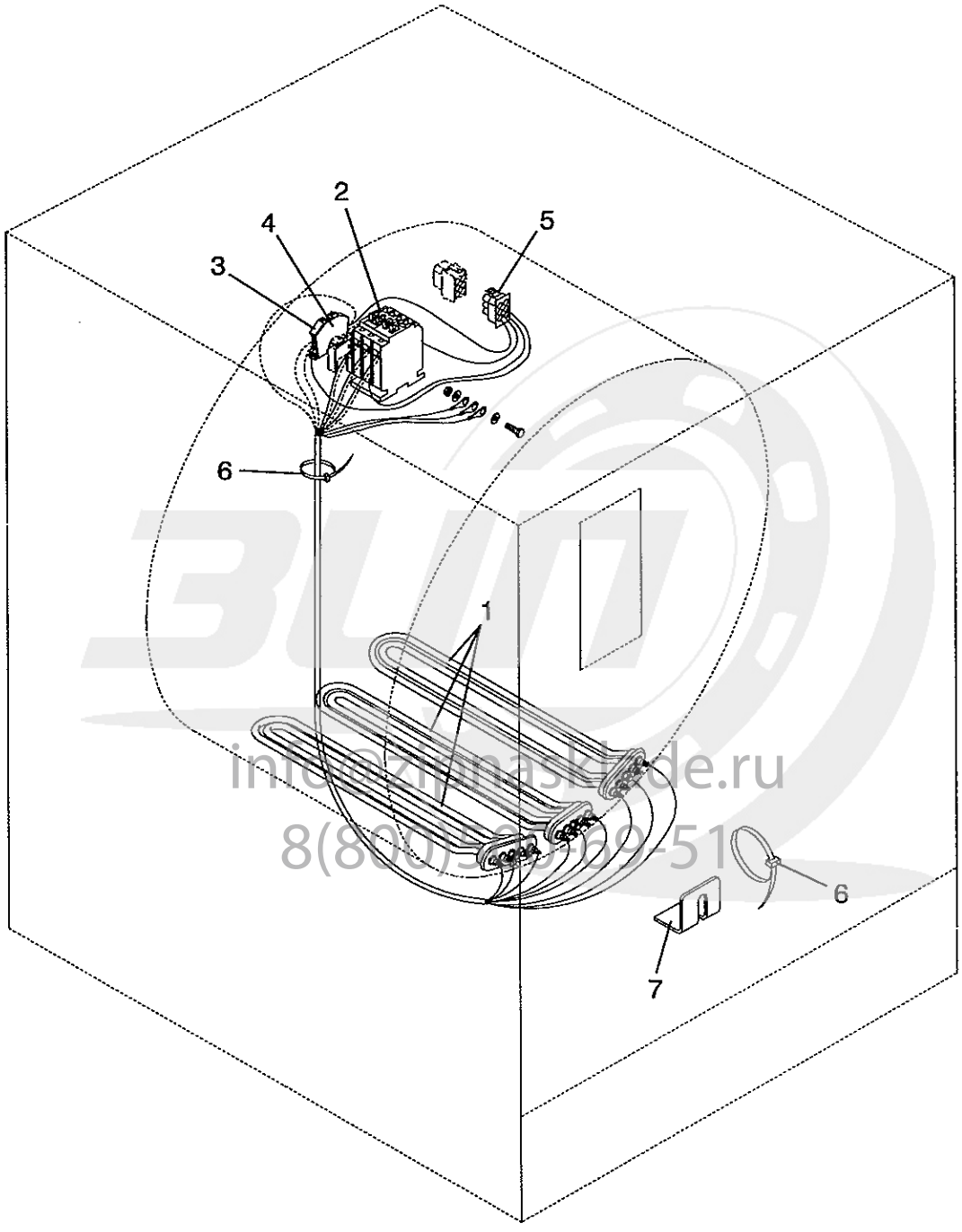

info@zinnasklade.ru
8(800)5[illegible]69-51

U-12269

Nº	REF.	DENOMINATION	DENOMINACIÓN	DÉNOMINATION
		ELECTRIC HEATING KITS	KITS CALEFACCIÓN ELÉCTRICA	KITS CHAUFFAGE ELECTRIQUE
	718817	EHK M 3PH 200-208-220-380V	KCE M III 200-208-220-380V	KCHE M 3PH 200-208-220-380V
	718825	EHK M 3PH 240-415-440V	KCE M III 240-415-440V	KCHE M 3PH 240-415-440V
1	153304	HEATER 220V (FOR 200,208,220 AND 380V)	CALEFACTOR 220V 2500W AISI316 (PARA 200,208,220 Y 380V)	RESISTANCE 220V (POUR 200,208,220 ET 380V)
	157313	HEATER 240V (FOR 240-415-440V)	CALEFACTOR 240V 2500W AISI316 (PARA 240-415-440V)	RESISTANCE 240V (POUR 240-415-440V)
2	193433	CONTACTOR 3TF31 01-OAN2	CONTACTOR 3TF31 01-OAN2	CONTACTEUR 3TF31 01-OAN2
	194050	COIL 3TY7 403-OAN2	BOBINA 3TY7 403-OAN2	BOBINE 3TY7 403-OAN2
3	155465	TERMINAL BC 10/16R 638455	BORNA CIAMA BC 10/16R 638455	BORNE BC 10/16R 638455
4	155275	END COVER FC2 5/10	TAPA FIN.CIAMA FC2.5/10 635455	COUVERCLE FINAL FC2.5/10
5	139394	PROTECTOR 1/480704-0	PROTECTOR 1/480704-0	PROTECTEUR 1/480704-0
6	140525	CLAMP 2244-0	BRIDA UNEX 2244-0	BRIDE 2244-0
7	261941	END PIECE	PIEZA TOPE	PIECE ARRET

info@zipnasklade.ru
8(800)500-69-51

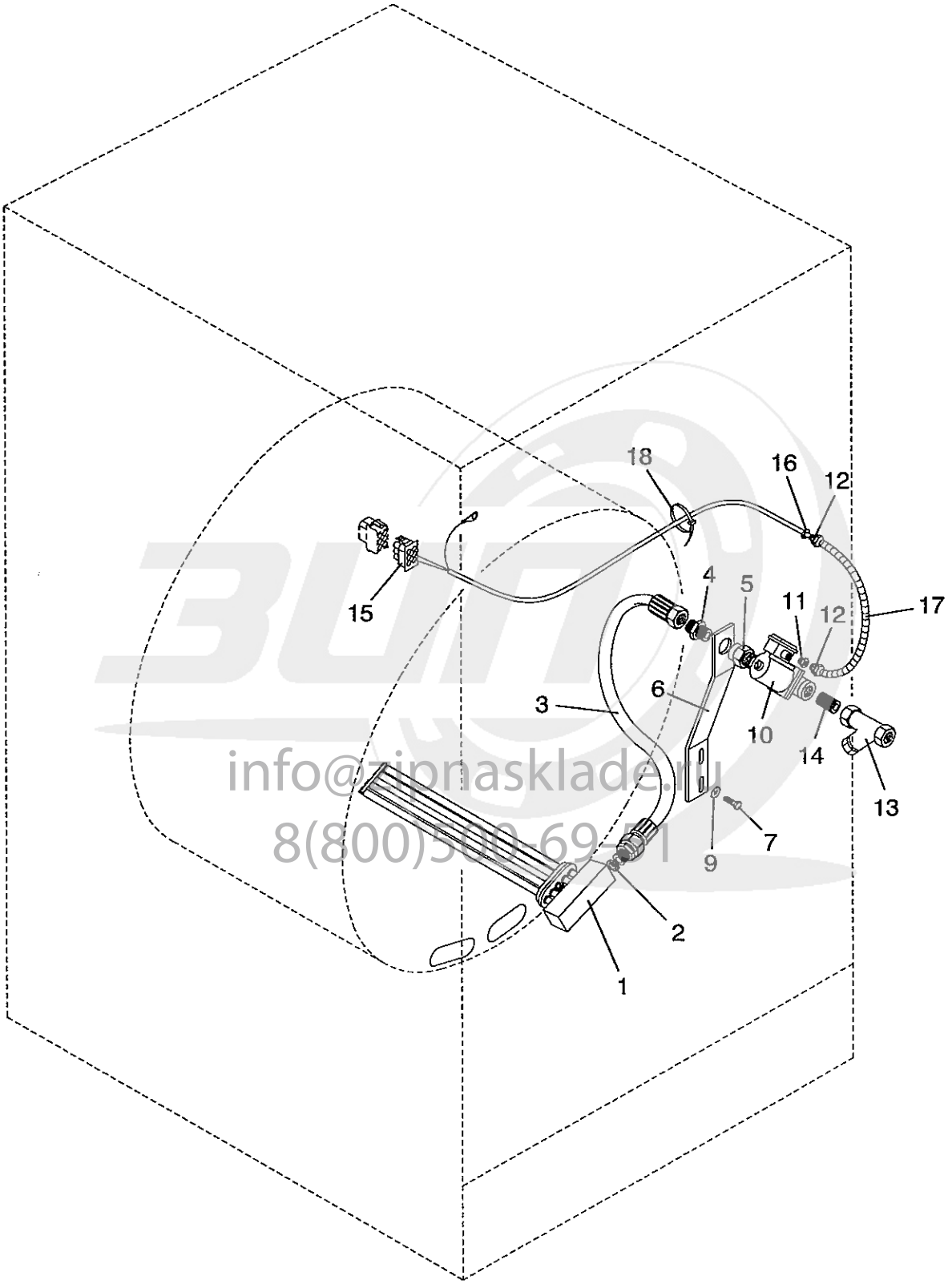

info@zipnasklade.ru
8(800)500-69-51

Nº	REF.	DENOMINATION	DENOMINACIÓN	DÉNOMINATION
		STEAM HEATING KITS	KITS CALEFACCIÓN VAPOR	KITS CHAUFFAGE VAPEUR
	718841	STEAM KIT FOR 50HZ	KIT CALEFACCION VAPOR 50HZ	KIT VAPEUR POUR 50HZ
	718858	STEAM KIT FOR 60HZ	KIT CALEFACCION VAPOR 60HZ	KIT VAPEUR POUR 60HZ
1	108431	STEAM DISTRIBUTOR	DISTRIBUIDOR VAPOR	DISTRIBUTEUR VAPEUR
2	109777	COPPER GASKET 1/2"	12504 JUNTA COBRE 1/2"	JOINT CUIVRE 1,2"
3	162305	STEAM INLET JOINTING	UNION ENTRADA VAPOR	UNION ENTREE VAPEUR
4	262840	JOINTING SCREW	TORNILLO UNION	VIS UNION
5	183525	MALE-FEMALE SLEEVE 1/2"	MANGUITO MACHO-HEMBRA1/2"LATON	FRETTE MALE-FEMELLE 1/2"
6	265256	STEAM INLET BRACKET	SOPORTE ENTRADA VAPOR	SUPPORT ENTREE VAPEUR
7	146233	BICR.HEX SCREW DIN933-8 M6X15	TOR.EX.DIN933-8.8 BICR.M 6X 15	VIS HEX DIN933-8.8 BICR.M6X15
9	149526	BICR.WASHER B DIN125-ST 6,4	ARAN.B DIN125-ST BICR. 6,4	RONDELLE B DIN125-ST BICR.6,4
10	156760	ELECTROVALVE 032U3033/84 1/2" (FOR 50HZ)	ELECT.032U3033/84 1/2" 220/50 (PARA 50 HZ)	ELECTROVANNE 032U3033/84 1/2" (POUR 50 HZ)
	159806	COIL 32K7771 220/50 (FOR 50HZ)	BOBINA DANFOSS 32K7771 220/50 (PARA 50 HZ)	BOBINE 32K7771 220/50 (POUR 50 HZ)
	159822	SPARE KIT EVJHS-15-20	KIT REPUES.EVJHS-15-20 32U3129	KIT RECHANGE EVJHS-15-20
	157545	ELECTROVALVE 032U3033/90 1/2" (FOR 60HZ)	ELECT.032U3033/90 1/2" 220/60 (PARA 60 HZ)	ELECTROVANNE 032U3033/90 1/2" (POUR 60 HZ)
	159814	COIL 32K7776 220/60 (FOR 60HZ)	BOBINA DANFOSS 32K7776 220/60 (PARA 60 HZ)	BOBINE 32K7776 220/60 (POUR 60 HZ)
	159822	SPARE KIT EVJHS-15-20	KIT REPUES.EVJHS-15-20 32U3129	KIT RECHANGE EVJHS-15-20
11	140319	REDUCER PG 13'5-9	REDUCTOR 130904 PG 13'5-9	REDUCTEUR PG 13'5-9
12	140152	RACCORD PG- 9	RACOR PG- 9 REF.330904	RACCORD PG- 9
13	133728	THREADED FILTER 1/2" O'3 PN16	FILTRO COLAD. ROSC.1/2"0'3PN16	FILTRE FILETE 1/2" 0,3 PN16
14	129999	FIG 531 1/2" GALV	FIGURA 531 DE 1/2" GALV.	FIG 531 1/2" GALV
15	139394	PROTECTOR 1/480704-0	PROTECTOR 1/480704-0	PROTECTEUR 1/480704-0
16	140228	COUNTERNUT PG-9	TUERCA PG 280904 PG- 9	CONTREECROU PG-9
17	140707	HOSE HELIPLAST NO 9 REF.77009 (1 METER)	TUBO HELIPLAST NO. 9 REF.77009 (1 METRO)	TUBE HELIPLAST NO 9 REF.77009 (1 METRE)
18	140525	CLAMP 2244-0	BRIDA UNEX 2244-0	BRIDE 2244-0

info@zippasklade.ru
8(800)500-69-51