Girbau, SA

SLI-14D Parts Manual

Phase 8

Girbau, SA
Carretera Manlleu, KM1
Vic, Barcelona, España 54380
Teléfono: 3493 886 1100 / Facsímil: 34 93 886 0785

e-mail: girbau@girbau.es

info@zipnasklade.ru
8(800)500-69-51

Part No. 450283

Retain This Manual
In A Safe Place For Future Reference

This product embodies advanced concepts in engineering, design, and safety. If this product is properly maintained, it will provide many years of safe, efficient, and trouble free operation.

ONLY properly licensed technicians should service this equipment.

OBSERVE ALL SAFETY PRECAUTIONS displayed on the equipment or specified in the installation manual included with the dryer.

FOR YOUR SAFETY

Do not store or use gasoline or other flammable vapors and liquids in the vicinity of this or any other appliance.

POUR VOTRE SÉCURITÉ

Ne pas entreposer ni utiliser d'essence ni d'autres vapeurs ou liquides inflammables à proximité de cet appareil ou de tout autre appareil.

We have tried to make this manual as complete as possible and hope you will find it useful. The manufacturer reserves the right to make changes from time to time, without notice or obligation, in prices, specifications, colors, and material, and to change or discontinue models.

Important

For your convenience, log the following information:

DATE OF PURCHASE _____ **MODEL NO.** **SLI-14D**

DISTRIBUTOR'S NAME _____

Serial Number(s) _____

_____

_____

info@zipnasklade.ru
8(800)500-69-51

For replacement parts, contact the distributor from which the dryer was purchased or contact:

Girbau, SA
Carretera Manlleu, KM1
Vic, Barcelona, España 54380
Teléfono: 3493 886 1100 / Facsímil: 34 93 886 0785
e-mail: girbau@girbau.es

The illustrations on the following pages may not depict your particular dryer exactly. The illustrations are a composite of the various dryer models. Be sure to check the descriptions of the parts thoroughly before ordering.

"IMPORTANT NOTE TO PURCHASER"

Information **must be** obtained from your local gas supplier on the instructions to be followed if the user smells gas. These instructions **must be** posted in a prominent location near the dryer.

NOTES _____

info@zipnasklade.ru
8(800)500-69-51

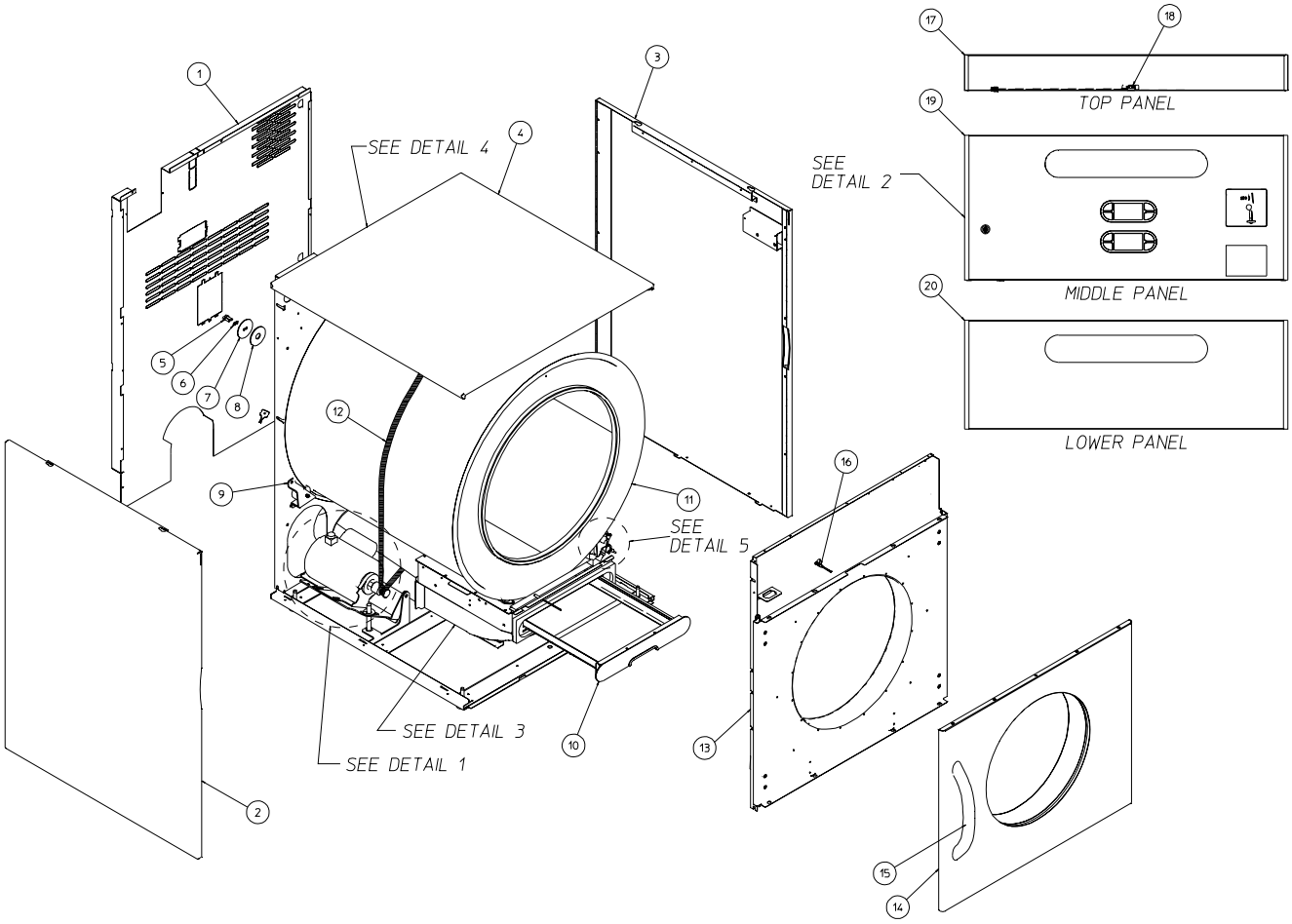

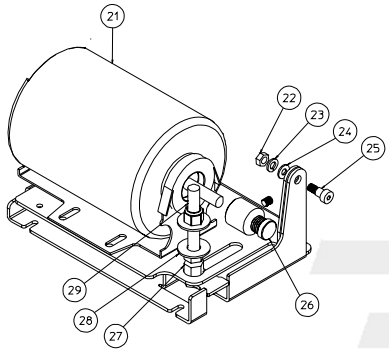

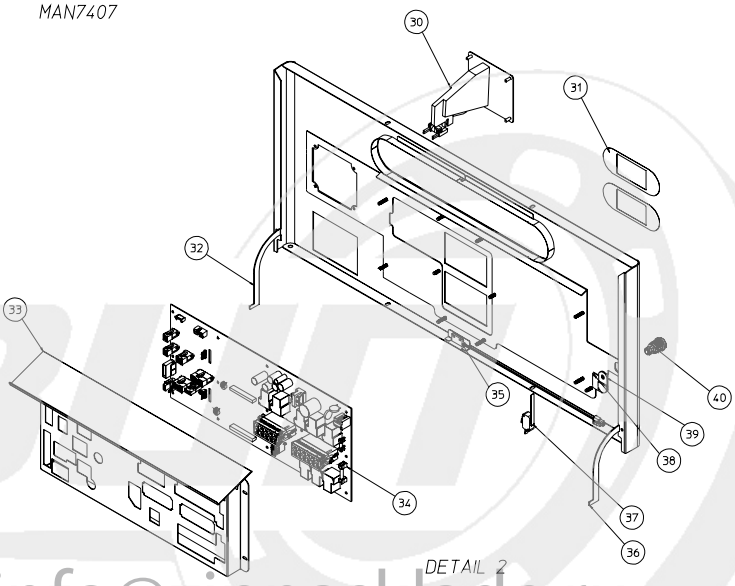

info@zipnasklade.ru
8(800)500-69-51

Illus. No.	Part No.	Qty.	Description
1	818925	1	Back Guard Assy (Gas and Electric) (as of December 7, 2005)
	818683	1	Back Guard Assy (Gas and Electric) (prior to December 7, 2005)
	819622	1	Back Guard Assy (Steam)
2	819619	1	Left Side Panel Assy (as of December 7, 2005)
	818679	1	Left Side Panel Assy (prior to December 7, 2005)
3	819621	1	Right Side Panel Assy (as of December 7, 2005)
	818678	1	Right Side Panel Assy (prior to December 7, 2005)
4	818690	1	Outer Top Panel Assy
5	150445	2	1/4-20 x 3/4” Bolt
6	153072	2	Spring Washer
7	318891	1	Backup Washer
8	153048	1	Inner Friction Pad (Gas and Electric)
	102373	1	Inner Friction Pad (Steam)
9	818110	1	Front Right/Rear Left Wheel
	818109	1	Front Left/Rear Right Wheel
10	819288	1	Lint Screen Assy (Painted)
	819315	1	Lint Screen Assy (Stainless Steel)
11	818815	1	Tumbler Assy (Galvanized)
	819398	1	Tumbler Assy (Stainless Steel)
12	102407	1	Belt
13	819132	1	Front Panel Assy Right Hinge (Coin)
	819359	1	Front Panel Assy Right Hinge (Non-Coin)
	102004	2	Magnet
	102005	2	Magnet Blank
	152224	4	Magnet Screw
	400563	1	Magnet Removal Bit
	131819	1	Reversing Contactor
14	819301	1	Door Assy Hinge Right (White)
	819388	1	Door Assy Hinge Right (Stainless Steel)
	819700	1	Door Assy Hinge Left (White)
	819387	1	Door Assy Hinge Left (Stainless Steel)
	102396	1	Door Gasket
	103067	2	Door Hinge
15	170233	1	Handle
16	819194	1	Rotation Sensor Assy
17	819190	1	Top Trim Panel Assy (White)
	819192	1	Top Trim Panel Assy (Stainless Steel)

Illus. No.	Part No.	Qty.	Description
18	819196	1	Door Switch Assy
19	819504	1	Phase 8 Control Door Assy (25¢ Coin)
	819625	1	Phase 8 Control Door Assy (Programmable Euro)
	819608	1	Phase 8 Control Door Assy (OPL)
	154061	8	U Nut Retainer
	183129	8	T-20 Truss Head Machine Screw
20	185097	1	Toe Panel (White)
	185048	1	Toe Panel (Stainless Steel)
21	884288	1	1/4 hp Motor with Sheave - 60 Hz (as of September 1, 2005)
	887030	1	1/4 hp Motor with Sheave - 50 Hz (as of September 1, 2005)
	818485	1	Motor Assy (prior to September 1, 2005)
22	152004	2	5/16-18 Hex Nut
23	153002	2	5/16” Split Lock Washer
24	153018	2	1/4” Flat Washer
25	154266	2	3/8” x 3/8” (5/16-18) Screw
26	318909	1	60 Hz Motor Sheave
	185067	1	50 Hz Motor Sheave
27	152011	1	1/2-13 Hex Nut
	152028	1	1/2-13 Nylon Insert Locknut
28	153011	1	9/16” ID, 1-3/8” OD Flat Washer
29	150609	1	1/2-13 x 4-1/2” Tap Bolt
30	818213	1	Coin Acceptor Assy (25¢ Coin)
	819264	1	Coin Acceptor Assy (Programmable Euro)
31	112587	2	Keypad (Coin)
	112586	2	Keypad (OPL)
32	318930	1	Control Panel Right Hinge
33	319337	1	Phase 8 Control Cover
34	137280	1	Phase 8 Computer
35	819196	1	Door Switch Assy
36	318929	1	Control Panel Left Hinge
37	122200	1	Program Switch
38	154004	1	Twin Speed Nut
39	160066	1	1-1/8” Long Cam
40	160069	1	Lock

info@zipnasklade.ru
8(800)500-69-51

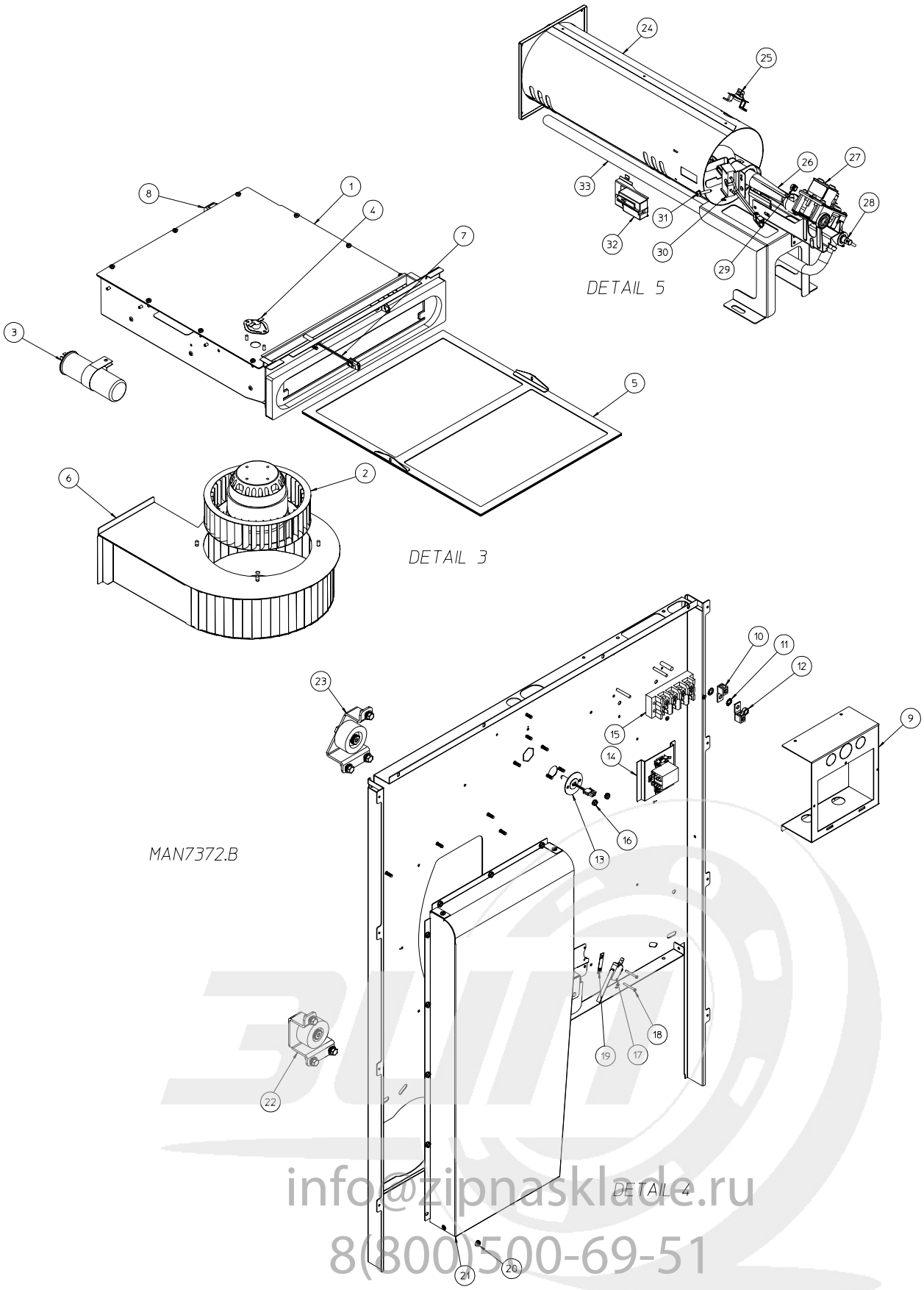

info@zipnasklade.ru
8(800)500-69-51

Illus. No.	Part No.	Qty.	Description
1	819193	1	Lint Box/Blower Assembly Complete
2	819185	1	Blower Motor Assembly 120V
3	100639	1	32 MFD Capacitor
4	130119	1	L190 Automatic Thermostat
5	819526	1	Inner Lint Screen
	319409	2	Inner Lint Screen Clamp
6	818545	1	Blower Housing
7	818986	1	Exhaust Temperature Sensor Assembly
8	122003	1	Lint Door Switch
9	318993	1	Rear Electrical Box (Gas & Steam)
	319327	1	Rear Electrical Box (Electric)
	318727	1	Rear Electrical Box Cover
10	153021	1	1/4” Shakeproof Washer
11	121010	1	Terminal Lug
12	152002	1	1/4-20 Hex Nut
13	819188	1	Axial Temperature Sensor Assembly
14	819648	1	Split Phase Assy (208-240V)
15	120728	1	Quick-Connect Terminal Block
16	153073	2	#8-32 KEPS Nut
17	122200	2	Sail Switch
18	150025	2	#4-40 x 1” Phillips Screw
19	154004	1	Twin Speed Nut
20	153073	14	#8-32 KEPS Nut
21	819113	1	Heat Duct with Sail Switch Assembly
22	818109	1	Front Left/Rear Right Wheel
23	818110	1	Front Right/Rear Left Wheel
24	819314	1	Burner Assembly
	819313	1	Burner Chamber
25	183112	1	Thermostat, Gas High-Limit
26	183144	1	Inshot Burner Tube, Hot Surface Ignition
27	128944	1	Gas Valve 120VAC 60 Hz
	128907	1	Gas Valve 120VAC 50 Hz
	884254	1	Liquid Propane Conversion Kit
28	141318	1	3/8” 90º Union Shutoff
29	140880	1	Natural Gas #22 Burner Orifice
	140905	1	Liquid Propane Gas #44 Burner Orifice
30	128910	1	Globar®
31	183145	1	#8-32 x 7/8” Hex Screw with Washer
32	130500	1	Radiant Control
33	185096	1	3/8” N.P.T. Male 90º Gas Pipe

info@zipnasklade.ru
8(800)500-69-51

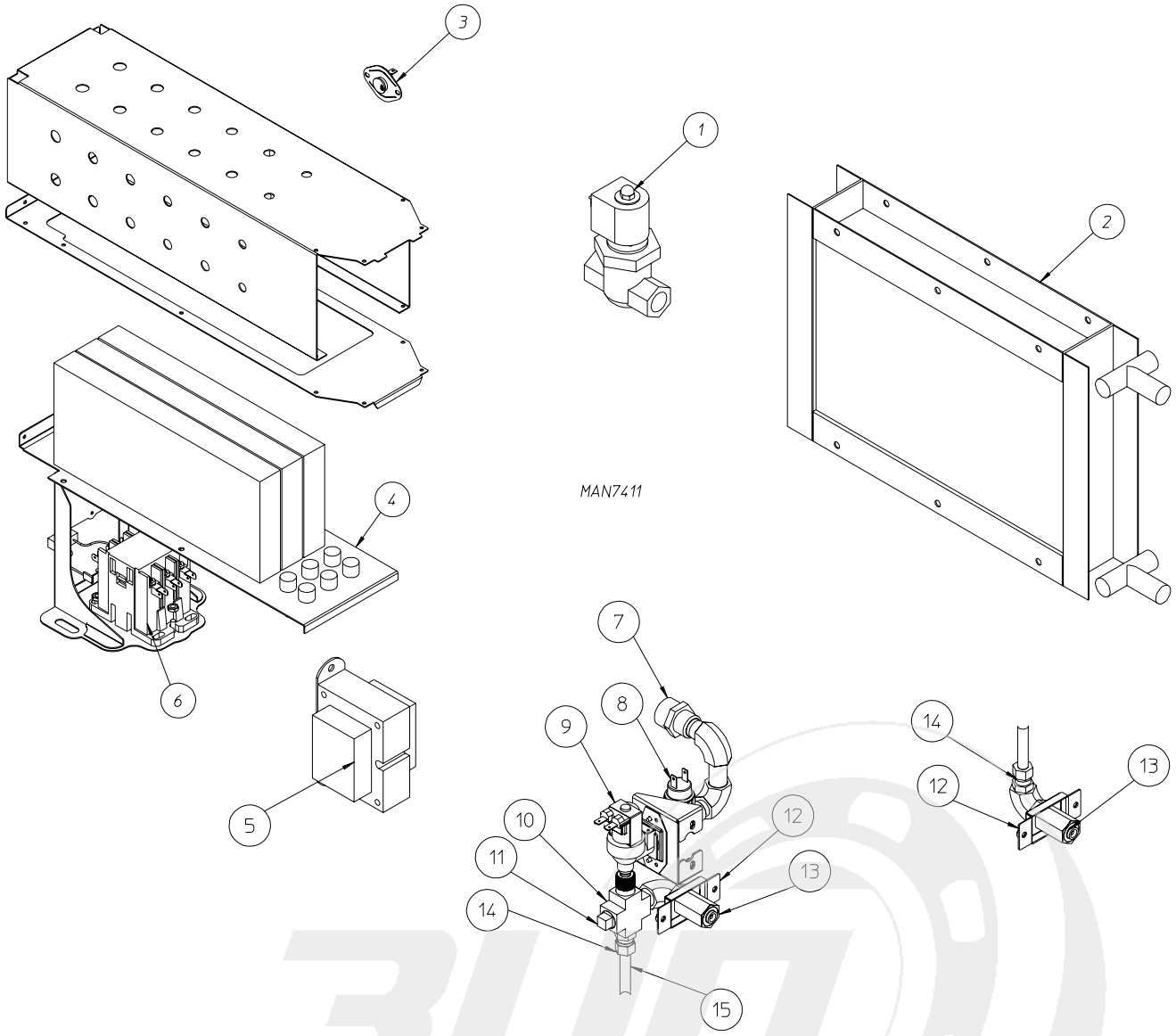

info@zipnasklade.ru
8(800)500-69-51

Illus. No.	Part No.	Qty.	Description
1	819579	1	Steam Valve Assembly 120V
2	165066	1	Copper Steam Coil
3	183112	1	High Limit Thermostat
4	119995	1	Electric Element
5	819712	1	120V to 24V Transformer
	819251	1	208V to 24V Transformer
	819267	1	240V to 24V Transformer
	132029	1	208 - 240V to 120V Transformer
6	131352	1	40AMP 24V Contactor
	131357	1	50AMP 24V Contactor
	131321	1	30AMP 120V Contactor
	131325	1	50AMP 120V Contactor
	131324	1	40AMP 208-240V Contactor
7	143025	1	Nylon Hose Adapter
8	136987	1	Pressure Switch
9	165120	1	Water Valve
10	143236	1	3/8" Brass Cross
11	143251	1	3/8” Plug
12	318422	1	S.A.F.E. Bracket
13	143581	1	Spray Nozzle
14	143208	1	3/8 Brass Connector
15	143099	1	3/8"OD Copper Tubing

info@zipnasklade.ru
8(800)500-69-51

info@zipnasklade.ru
8(800)500-69-51