GIRBAU, S.A.

SLI-9 Parts Manual
Phase 8 / HSI

Girbau, S.A.
Carretera Manlleu, KM 1
08500 Vic (Barcelona) Spain
Telephone: 3493 886 1100
Fax: 34 93 886 0785

info@zipnasklade.ru
8(800)500-69-51

Part No. 450378

Retain This Manual
In A Safe Place For Future Reference

This product embodies advanced concepts in engineering, design, and safety. If this product is properly maintained, it will provide many years of safe, efficient, and trouble-free operation.

ONLY qualified licensed technicians should service this equipment.

OBSERVE ALL SAFETY PRECAUTIONS displayed on the equipment or specified in the installation manual included with the dryer.

The following “FOR YOUR SAFETY” caution must be posted near the dryer in a prominent location.

FOR YOUR SAFETY

Do not store or use gasoline or other flammable vapors and liquids in the vicinity of this or any other appliance.

POUR VOTRE SÉCURITÉ

Ne pas entreposer ni utiliser d’essence ni d’autres vapeurs ou liquides inflammables à proximité de cet appareil ou de tout autre appareil.

We have tried to make this manual as complete as possible and hope you will find it useful. The manufacturer reserves the right to make changes from time to time, without notice or obligation, in prices, specifications, colors, and material, and to change or discontinue models.

Important

For your convenience, log the following information:

DATE OF PURCHASE _____ **MODEL NO.** _____

RESELLER’S NAME _____

Serial Number(s) _____

_____

_____

info@zipnasklade.ru
8(800)500-69-51

Replacement parts can be obtained from your reseller or Girbau, S.A. When ordering replacement parts from the factory, you can FAX your order to Girbau, S.A. at 3493 886 0785 or telephone your order directly to the Girbau, S.A. Parts Department at 3493 886 1100. Please specify the dryer model number and serial number in addition to the description and part number, so that your order is processed accurately and promptly.

The illustrations on the following pages may not depict your particular dryer exactly. The illustrations are a composite of the various dryer models. Be sure to check the descriptions of the parts thoroughly before ordering.

"IMPORTANT NOTE TO PURCHASER"

Information must be obtained from your local gas supplier on the instructions to be followed if the user smells gas. These instructions must be posted in a prominent location near the dryer.

NOTES _____

info@zipnasklade.ru
8(800)500-69-51

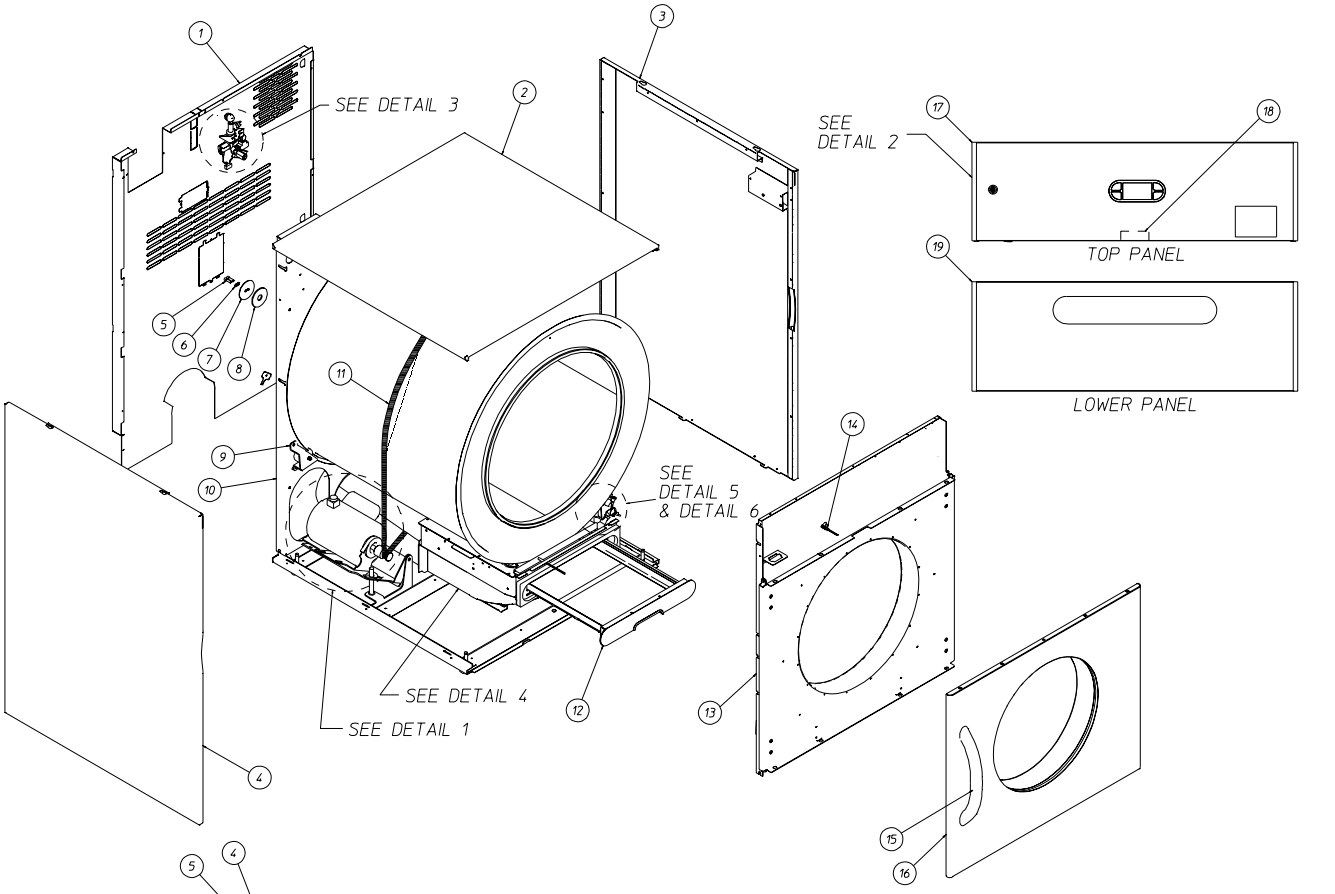

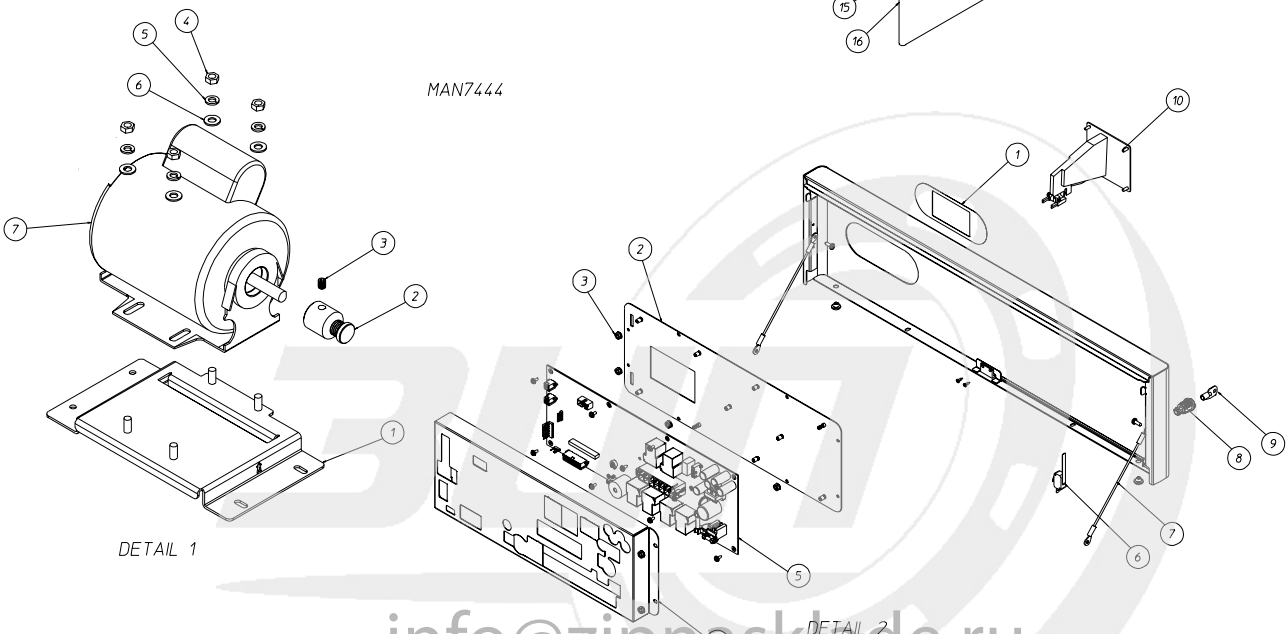

info@zipnasklade.ru
8(800)500-69-51

Illus. No.	Part No.	Qty.	Description
1	818770	1	Back Guard Assembly HSI
	319861	1	Junction Box Cover
	150331	10	T20 Screws
2	818583	1	Top Panel
	183129	4	Screw (For Rear of Top Panel)
	183008	4	0.060 Keyhole Button, Yellow
	154220	4	3/16” Open End Domed Rivet
	828028	4	Leveling Leg and Nut Assembly
3	818757	1	Right Side Assembly HSI
4	818756	1	Left Side Assembly HSI
5	150445	2	1/4-20 x 3/4” Screw, Black
6	153072	2	Spring Washer
7	318891	1	Dual Screw Backup Washer
8	153048	1	Inner Friction Pad
9	818115	1	Tumbler Assembly, Phase 8
	115906	1	Front Tumbler Felt
	115910	1	Rear Tumbler Felt
	401010	1	Adhesive
10	818762	1	Gas Rear Support Panel Assembly HSI
	818764	1	Electric Rear Support Panel Assembly HSI
	818728	1	Left Rear Wheel Assembly
	818729	1	Right Rear Wheel Assembly
	180050	2	Support Wheel
	122200	1	Sail Switch
	819188	1	F.S.S./Axial Probe Assembly
11	100197	1	Belt
12	819345	1	Cold Rolled Steel Lint Drawer Assembly
	819287	1	Cold Rolled Steel Lint Drawer Handle Assembly
	185226	1	Lint Screen Handle (Cold Rolled Steel Drawer), Black
	150334	2	Lint Screen Handle Screws
	818802	1	Stainless Steel Lint Drawer Assembly, Oval
	819346	1	Stainless Steel Lint Drawer Handle Assembly HSI
	102347	1	Lint Drawer Handle Pad (Stainless Steel Drawer)
	183129	2	Lint Drawer Handle Screws
13	819363	1	Cold Rolled Steel Front Panel Assembly (Non-Coin)
	819667	1	Cold Rolled Steel Front Panel Assembly (Coin)
	818713	1	Front Right Wheel Assembly
	818714	1	Front Left Wheel Assembly
	180050	2	Support Wheel
	102004	2	Magnet for Main Door Closure
	102005	2	Magnet Blank for Main Door Closure
	154061	8	Clips for Control and Toe Panel Retention
	183129	8	Panel Screws
14	819194	1	Rotation Sensor Assembly
15	170233	1	Handle for Stainless Steel Door
	170230	1	Handle for Cold Rolled Steel Door
16	819394	1	Cold Rolled Steel Door Assembly (Right Hand)
	819399	1	Stainless Steel Door Assembly (Right Hand)
	103067	2	Door Hinge
	150328	2	Door Handle Screws
	183129	4	Panel Screws (Holds Door to Machine)
17*	819672	1	Phase 8.3 Non-Coin Top Control Panel
	819734	1	Phase 8.3 Coin Top Control Panel
	112371	1	Girbau Logo
	117516	1	2-Sided Tape
	102367	1	Bumper for Control Panel
18	819196	1	Phase 8 Door Switch Assembly
19*	185108	1	Cold Rolled Steel Toe Panel with Slots
	185020	1	Stainless Steel Toe Panel with Slots

* Consult factory for bottom controls.

info@zipnasklade.ru
8(800)500-69-51

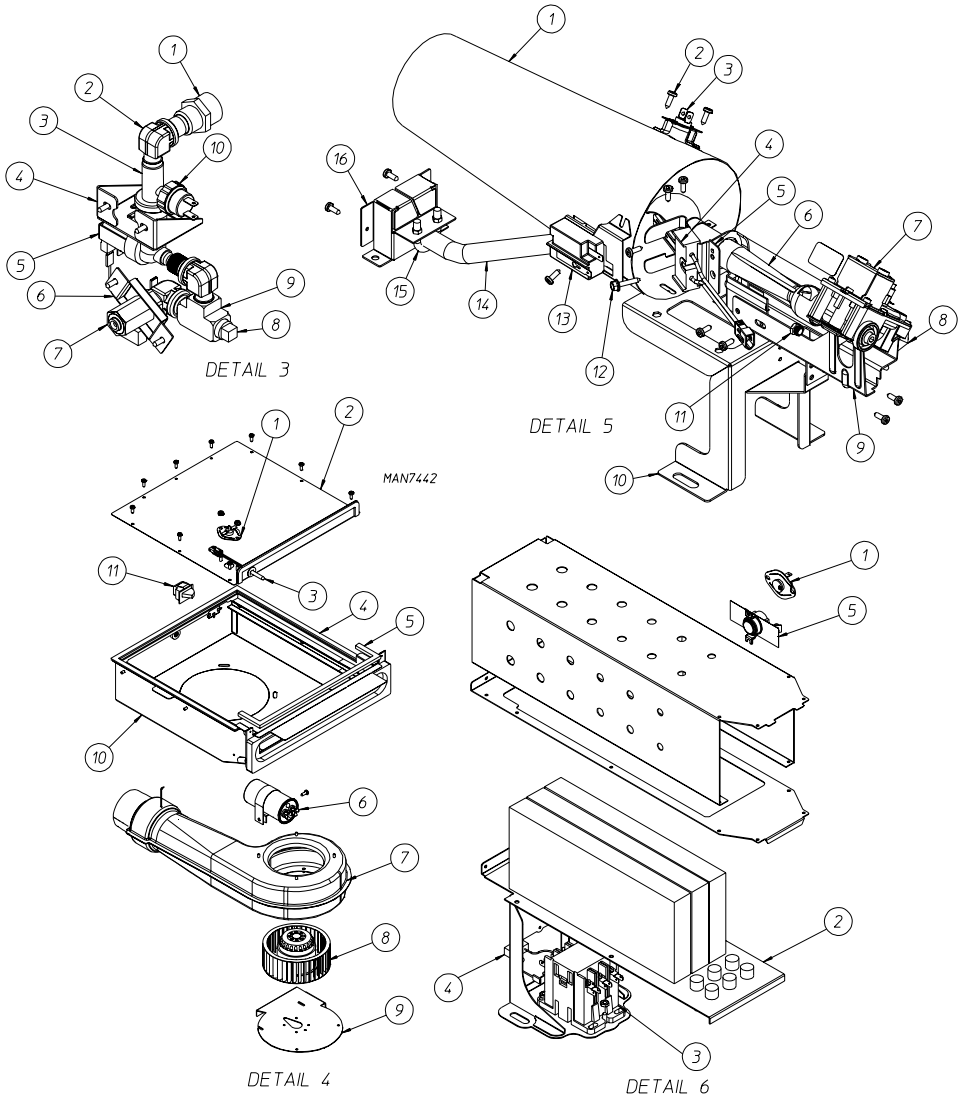

Illus. No.	Part No.	Qty.	Description
DETAIL 1 – DRIVE MOTOR ASSEMBLY			
1	318548	1	Motor Base
2	185000	1	50 Hz Motor Sheave
3	154321	1	5/16-24 x 3/8” Alan Setscrew, Black
4	152004	4	5/16-18 Hex Nut
5	153002	4	5/16” Split Lockwasher
6	153001	4	5/16” Flat Washer
7	819685	1	Drive Motor Assembly with Base
	887070	1	Drive Motor with Sheave (50 Hz)
	131818	1	208-240V Reversing Relay (Phase 8)
DETAIL 2 – CONTROL PANEL ASSEMBLY			
1	112587	1	Phase 8 Coin Membrane Switch
	112586	1	Phase 8 Non-Coin Membrane Switch
2	819658	1	Phase 8 CB Mount
3	153073	8	#8-32 Keps Nut Steel
4	350250	1	Phase 8 Computer Board Cover
5	137279	1	Phase 8.3 Computer Board
6	122200	1	Sail Switch
7	121530	2	Control Panel Strain Relief Cable
8	883977	1	XX4451 Door Lock with Cam (Coin)
9	160140	1	Key Only for XX4451 Lock (Coin)
10	819264	1	Phase 8 Programmable Euro/UK Multi Coin Acceptor
	818821	1	Coin Vault Assembly with Top Control HSI
	125915	1	Coin Box

info@zipnasklade.ru
8(800)500-69-51

Illus. No.	Part No.	Qty.	Description
DETAIL 3 – FIRE SUPPRESSION SYSTEM ASSEMBLY			
1	143025	1	3/8” x 3/4” N.P.T. Nylon Hose Adaptor
2	143155	1	3/8” Brass Street Elbow
3	143152	1	1/4” Comp x 1/8” M.P.T. Straight Connector
4	319231	1	F.S.S. Valve Bracket
5	165120	1	Water Valve 24VDC Phase 8
	824081	1	R.C. Network with Connectors
6	318422	1	F.S.S. Bracket
7	143581	1	F.S.S. 3 GPM 3/8” N.P.T. Spray Nozzle
8	143251	1	3/8” M.P.T. Brass Plug
9	143220	1	3/8” F.P.T. Brass Tee
10	136987	1	Water Jet Pressure Switch
DETAIL 4 – LINT BOX/BLOWER ASSEMBLY			
	819343	1	200-240V Lint Coup Blower Assembly
1	130119	1	L190 Temperature Sensor (Automatic)
2	819347	1	Lint Box Top
3	818986	1	Phase 8 Exhaust Temperature Sensor Assembly
4	117604	3	1/8” Thick x 3/8” Wide Neo. Sponge Tape
5	117605	1	1/4” Thick x 3/8” Wide Neo. Sponge Tape
6	100633	1	6 MFD Capacitor 440V 50/60 Hz
7	185139	1	Blower Housing Damper Assembly
8	819277	1	230V Blower Motor Assembly
9	319904	1	Blower Housing Mount
10	818803	1	Lint Box Assembly
11	122002	1	Lint Drawer Switch
DETAIL 5 – GAS TRAIN ASSEMBLY			
	819324	1	230V 50 Hz HSI Natural Gas Train Assembly
	132029	1	350VA Autotransformer
1	183143	1	Burner Cone, Black
2	150331	6	#8-18 x 1/2” T20 TORX Screw
3	183112	1	Hi-Limit
4	128910	1	Globar®
5	185063	1	HSI Ignitor Bracket
6	183144	1	Inshot Burner Tube HSI
7	128907	1	25M Gas Valve 120VAC 50 Hz
	884110	1	40,000 Btu L.P. Kit
8	141319	1	3/8” Union Elbow Assembly
9	185061	1	HSI Burner Base
10	318979	1	Gas Train Support Bracket HSI
11	140873	1	#30 Burner Orifice
12	183145	1	#8-32 x 7/8” Hex Conical Screw
13	130500	1	Radiant Control
14	185178	1	HSI Gas Pipe for CE
15	154356	1	U-Bolt with Nuts for 3/8” Pipe
16	318835	1	Gas Pipe Bracket
DETAIL 6 – ELECTRIC OVEN ASSEMBLY			
	819751	1	Electric Oven Assembly 200-240V 50 Hz Single-Phase
1	130123	1	300° F Temperature Sensor
2	120089	1	5.4 kW/240V-8.1 kW/416 Element
3	131322	1	208/240V 30A Cont with Lugs 50/60 Hz
4	824081	1	R.C. Network with Connectors
5	130400	1	L290 Auto Hi-Limit

info@zipnasklade.ru
8(800)500-69-51

info@zipnasklade.ru
8(800)500-69-51