Mod.	From serial Nº. A partir máq. Nº.
ED660	2.290.001

Parts Handbook for Dryers
Manual de Despiece para Secadoras
Notice Vues Eclatées pour Séchoirs
ED660

GIRBAU, SA
Crta de Manlleu, km. 1
08500 VIC (Barcelona) • SPAIN
www.girbau.es

Comercial:
Tel.(+ 34) 902 300 359
comercial@girbau.es

Internacional:
Tel.(+ 34) 938 862 219
sales@girbau.es

Posventa:
Tel.(+ 34) 902 300 357
sat@girbau.es

info@zipnasklade.ru
8(800)500-69-51

Parts Handbook
Despiece
Vues Eclatées

ED660

Cod. 561043
ALT.04
Rev. 04/0618

NOTES TO USE PARTS LIST

Sheets no. 1,2,3,4 & 9:
Are common for all versions.

Sheet no. 3/1
Relates to ETL machines (USA/CANADA).

Sheet no. 5:
Relates to electrical heated machines.

Sheet no. 6:
Relates to gas heated machines.

Sheet no. 7:
Relates to SC version.

Sheet no. 8:
Relates to CC version.

Sheet no. 10:
Relates to steam heated machines.

Sheet no. 11:
Labels according to model.

ETL machines USA/CANADA
AGA machines Gas Australia

ACLARACIONES PARA EL USO DEL DESPIECE

Hojas nº 1,2,3,4 y 9:
Son comunes a todas las variantes.

Hoja nº 3/1
Corresponde a màquinas ETL (USA/CANADA).

Hoja nº 5:
Corresponde a las máquinas con calefacción eléctrica.

Hoja nº 6:
Corresponde a las máquinas con calefacción a gas.

Hoja nº 7:
Corresponde a la variante SC.

Hoja nº 8:
Corresponde a la variante CC.

Hoja nº 10:
Corresponde a las máquinas con calefacción a vapor.

Hoja nº 11:
Etiquetas según modelo.

ETL máquinas USA/CANADA
AGA máquinas Gas Australia

NOTES UTILISATION VUES ECLATEES

Feuilles no.1,2,3,4 et 9:
Sont communes à toutes les versions.

Feuille no 3/1
Correspond aux machines ETL (USA/CANADA).

Feuille no. 5 :
Correspond aux machines à chauffage électrique.

Feuille no. 6 :
Correspond aux machines à chauffage à gaz.

Feuille no. 7:
Correspond à la version SC.

Feuille no. 8:
Correspond à la version CC.

Feuille no. 10 :
Correspond aux machines à chauffage à vapeur.

Feuille no. 11 :
Étiquètes selon le modèle.

ETL machines USA/CANADA
AGA machines Gas Australie

info@zipnasklade.ru
8(800)500-69-51

VERY IMPORTANT:
Before ordering parts be sure they have not been modified. Check it on modification sheet, after the corresponding sheet.

MUY IMPORTANTE:
Al pedir una pieza cerciorarse antes de que la misma no ha sido modificada. Si lo hubiese sido, estaría situada como hoja de modificaciones, detrás de la hoja correspondiente.

TRES IMPORTANT:
Avant de commander une pièce, s'assurer qu'elle n'a pas été modifiée. Le vérifier sur feuille de modifications, derrière la feuille correspondante.

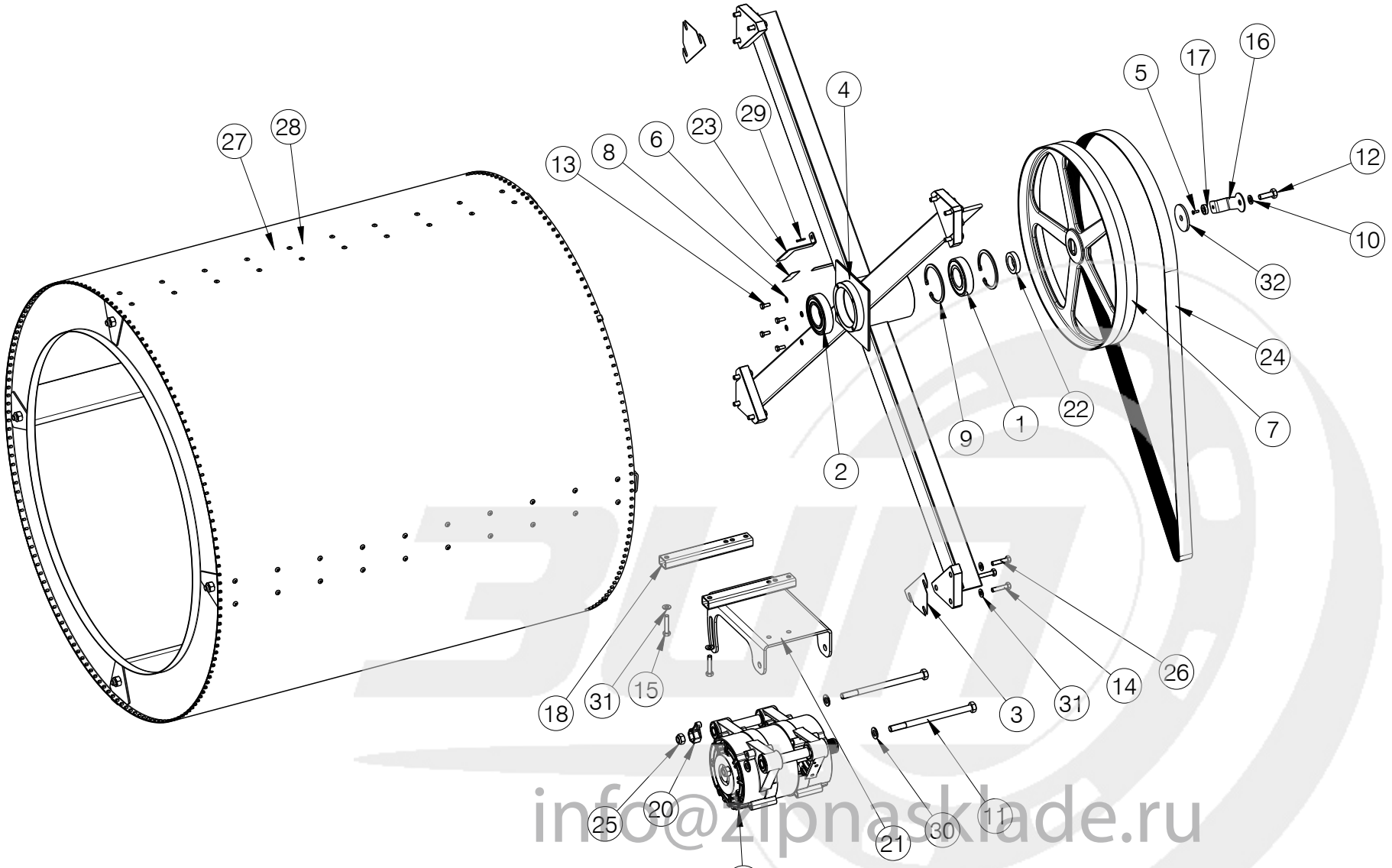

info@zipnasklade.ru
8(800)500-69-51

Nº	REF	DENOMINATION	DENOMINACIÓN	DENOMINATION
1	305789	BEARING 6208-2Z	RODAMIENTO 6208-2Z	ROULEMENT 6208-2Z
2	168799	BEARING 6209-2Z QE6	RODAMIENTO 6209-2Z QE6	ROULEMENT 6209-2Z QE6
3	559237	BEARING BOX PIECE	GRUESO CAJA COJINETES	PIECE BOITE ROULEMENTS
4	541144	BEARING BOX SET	CONJUNTO CAJA COJINETES	ENSEMBLE BOITE ROULEMENTS
5	147629	COUNTERSUNK SCREW DIN 963 4,8 M4x13 TRIV	TORNILLO AVELLANADO DIN 963 4,8 M4x13 TR	VIS FRAISEE DIN 963 4,8 M4x13 TRIVALENT
6	341578	DOUBLE SIDED FOAM TAPE width 19mm	CINTA ADHESIVA DOBLE CARA ancho 19mm	RUBAN DOUBLE FACE largeur 19mm
7	541235	TUMBLER PULLEY	POLEA TAMBOR	POULIE TAMBOUR
8	149716	BICR.EXT TOOT.WASH.DIN6798 M6	ARAN.DEN.EXT.B.TRI.DIN6798M 6	RONDEL.DEN.EX.BICR DIN6798 M6
9	131599	FLEXIBLE RING I-80 DIN 472	ANILLO ELASTICO I- 80 DIN 472	BAGUE ELASTIQUE I-80 DIN 472
10	149799	GROWER WASHER DIN 127 M-10	ARAN.GROWER A10 DIN127 B.TRI.	RONDELLE GROWER DIN 127 M-10
11	545400	BIC.HEX SCREW DIN931-8.8	TOR.EX.DIN931-8.8B.TRI.M12X190	VIS HEX BICR.DIN931-8.8
12	146506	8G HEX.SCREW DIN 933 M-10X30	TOR.EX.DIN933-8.8 B.TRI.M10X30	VIS HEX. 8G DIN 933 M-10X30
13	146233	BICR.HEX SCREW DIN933-8 M6X15	TOR.EX.DIN933-8.8 B.TRI.M 6X15	VIS HEX DIN933-8.8 BICR.M6X15
14	191676	HEX SCREW 8G DIN933 M 8X 35	TOR.EX.DIN933-8.8 B.TRI.M 8X35	VIS HEX 8G DIN933 M 8X 35
15	181867	HEX SCREW DIN933 M8X40	TOR.EX.DIN933-8.8 B.TRI.M 8X40	VIS HEX DIN933 M8X40
16	542241	PULLEY MAGNET BRACKET	SOPORTE IMAN POLEA	SUPPORT AIMANT POULIE
17	544940	MAGNET ø20x6 NEODYMIUM	IMAN ø20x6 NEODIMIO	AIMANT ø20X6 NÉODYME
18	541664	MOTOR BRACKET SUPPLEMENT	SUPLEMENTO SOPORTE MOTOR	SUPPLEMENT SUPPORT MOTEUR
19	10551646	MOTOR MT90-70/6 CSA	MOTOR MT90-70/6 CSA	MOTEUR MT90-70/6 CSA
20	338095	MOTOR NUT BRACKET	SOPORTE TUERCA MOTOR	SUPPORT ECROU MOTEUR
21	545434	MOTOR BRACKET	SOPORTE MOTOR	SUPPORT MOTEUR
22	554659	PULLEY DIVIDER	SEPARADOR POLEA	SEPARATEUR POULIE
23	542258	PULLEY REED SENSOR BRACKET	SOPORTE SENSOR REED POLEA	SUPPORT SENSEUR REED POULIE
24	541276	BELT 13PJ2155	CORREA 13PJ2155	COURROIE 13PJ2155
25	150656	SELF-LOCKING NUT DIN985-8 B.TRI.M12	TUER.AUTOB.DIN985-8 B.TRI.M12	ECROU AUTOBLOCANT DIN985-8 B.TRI.M12
26	134015	THREADLOCKER	FIJADOR DE ROSCAS	FREIN FILET
27	541326	TUMBLER (INOX)	TAMBOR (INOX)	TAMBOUR (INOX)

info@zipnasklade.ru
8(800)500-69-51

Nº	REF	DENOMINATION	DENOMINACIÓN	DENOMINATION
28	611152	TUMBLER (GALVANIZED)	TAMBOR (GALVANIZADO)	TAMBOUR (GALVANISÉS)
29	546697	TUMBLER ROTATION AND DOOR DETECTOR	DETECTOR PUERTA Y GIRO TAMBOR	DETECTEUR PORTE ET ROTATION TAMBOUR
30	149419	BICR.WASHER B DIN125-ST 13	ARAN.B DIN125-ST B.TRI.13	RONDELLE B DIN125-ST BICR.13
31	149518	BICR.WASHER B DIN125-ST 8,4	ARAN.B DIN125-ST B.TRI. 8,4	RONDELLE.B DIN125-ST BICR.8,4
32	406421	WASHER D57XD11X4 TRIVALENT	ARANDELA 57X11X4 TRIVALENTE	RONDELLE D57XD11X4 TRIVALENT

info@zipnasklade.ru
8(800)500-69-51

ED660
Pag. 2

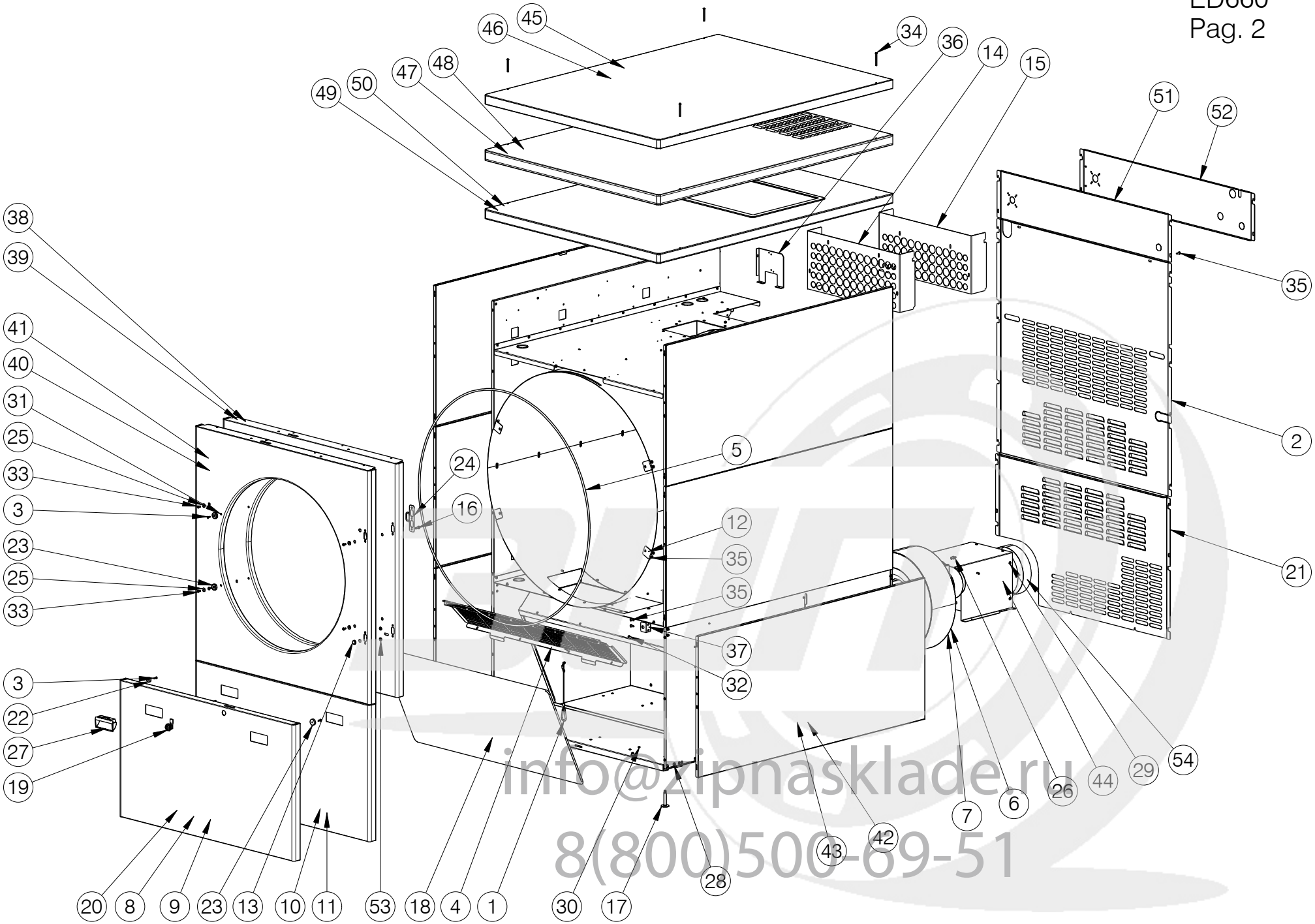

info@zipnasklade.ru
8(800)500-69-51

Nº	REF	DENOMINATION	DENOMINACIÓN	DENOMINATION
1	579508	FILTER COVER WIRE SET	CONJUNTO CABLE TAPA FILTRO	ENSEMBLE CÂBLE COUVERCLE FILTRE
2	541755	CENTRAL REAR COVER	TAPA POSTERIOR CENTRAL	COUVERCLE POSTERIEUR CENTRAL
3	147629	COUNTERSUNK SCREW DIN 963 4,8 M4x13 TRIV	TORNILLO AVELLANADO DIN 963 4,8 M4x13 TR	VIS FRAISEE DIN 963 4,8 M4x13 TRIVALENT
4	600254	TUMBLER ACCES PROTECTION	PROTECCION ACCESO TAMBOR	PROTECTION ACCES TAMBOUR
5	165472	ETHILENE-PROP. PROFILE	PERFIL ETILENO-PROP.REF.44117L	PROFILE ETHILENE-PROP.
6	554774	FAN 0.55KW 200-240VAC 50HZ	VENTILADOR 0.55KW 200-240VAC 50HZ *	VENTILATEUR 0.55KW 200-240VAC 50HZ
7	557264	FAN SET 60Hz (FOR CE MODELS) (FOR AGA MODELS)	VENTILADOR 0.55KW 200-240VAC 60HZ * (PARA MODELOS CE) (PARA MODELOS AGA)	ENSEMBLE VENTILATEUR 60Hz (POUR MODÈLES CE) (POUR MODÈLES AGA)
	10551992	FAN ASSEMBLY 60Hz CSA (FOR ETL MODELS)	CONJUNTO VENTILADOR 60Hz CSA (PARA MODELOS ETL)	ENSEMBLE VENTILATEUR 60Hz CSA (POUR MODÈLES ETL)
8	582098	CC FILTER COVER SET (PRE-COATED) FROM MACHINE Nr: 2.290.591	CONJUNTO TAPA FILTRO CC (PRE-COATED) A PARTIR DE LA MAQUINA No : 2.290.591	ENSEMBLE COUVERCLE FILTRE CC (PRE-COATED) A PARTIR DE LA MACHINE NR: 2.290.591
	542829	CC LOWER PANNEL (PRE-COATED) FROM MACHINE Nr: 2.290.001 TO MACHINE No : 2.290.590	PANEL INFERIOR CC (PRE-COATED) A PARTIR DE LA MAQUINA No : 2.290.001 HASTA LA MAQUINA No: 2.290.590	PANNEAU INFERIEUR CC (PRE-COATED) A PARTIR DE LA MACHINE NR: 2.290.001 JUSQU'A LA MACHINE No : 2.290.590
9	582106	CC FILTER COVER SET (INOX) FROM MACHINE Nr: 2.290.591	CONJUNTO TAPA FILTRO CC (INOX) A PARTIR DE LA MAQUINA No : 2.290.591	ENSEMBLE COUVERCLE FILTRE CC (INOX) A PARTIR DE LA MACHINE NR: 2.290.591
	545947	CC LOWER PANNEL (INOX) FROM MACHINE Nr: 2.290.001 TO MACHINE No : 2.290.590	PANEL INFERIOR CC (INOX) A PARTIR DE LA MAQUINA No : 2.290.001 HASTA LA MAQUINA No: 2.290.590	PANNEAU INFERIEUR CC (INOX) A PARTIR DE LA MACHINE NR: 2.290.001 JUSQU'A LA MACHINE No : 2.290.590
10	582080	SC FILTER COVER SET (INOX) FROM MACHINE Nr: 2.290.591	CONJUNTO TAPA FILTRO SC (INOX) A PARTIR DE LA MAQUINA No : 2.290.591	ENSEMBLE COUVERCLE FILTRE SC (INOX) A PARTIR DE LA MACHINE NR: 2.290.591
	578245	SC LOWER PANNEL (INOX) FROM MACHINE Nr: 2.290.001 TO MACHINE No : 2.290.590	PANEL INFERIOR SC (INOX) A PARTIR DE LA MAQUINA No : 2.290.001 HASTA LA MAQUINA No: 2.290.590	PANNEAU INFERIEUR SC (INOX) A PARTIR DE LA MACHINE NR: 2.290.001 JUSQU'A LA MACHINE No : 2.290.590

info@zipnasklad.ru
8(800)500-69-51

Nº	REF	DENOMINATION	DENOMINACIÓN	DENOMINATION
11	582072	SC FILTER COVER SET (PRE-COATED) FROM MACHINE Nr: 2.290.591	CONJUNTO TAPA FILTRO SC (PRE-COATED) A PARTIR DE LA MAQUINA No : 2.290.591	ENSEMBLE COUVERCLE FILTRE SC (PRE-COATED) A PARTIR DE LA MACHINE NR: 2.290.591
	578237	SC LOWER PANNEL (PRE-COATED) FROM MACHINE Nr: 2.290.001 TO MACHINE No : 2.290.590	PANEL INFERIOR SC (PRE-COATED) A PARTIR DE LA MAQUINA No : 2.290.001 HASTA LA MAQUINA No: 2.290.590	PANNEAU INFERIEUR SC (PRE-COATED) A PARTIR DE LA MACHINE NR: 2.290.001 JUSQU'A LA MACHINE No : 2.290.590
12	10311777	FRONT COVER REINFORT SET	CONJUNTO REFUERZO TAPA FRONTAL	RENFORCEMENT MIXTE DE COUVERTURE
13	514695	GROMMET REF-1013	PASAMUROS REF-1013	LOGEMENT REF-1013
14	552364	HEATER AIR INLET PLATE (FOR NOMINAL POWER MODELS)	CHAPA ENTRADA AIRE RESISTENCIAS (PARA MOD.CON POTENCIA NOMINAL)	PLAQUE ENTREE AIR RESISTANCES (POUR MOD.AVEC PUISSANCE NOMINAL)
15	556548	HEATER AIR INLET PLATE (FOR REDUCED POWER MODELS)	CHAPA ENTRADA AIRE RESISTENCIAS (PARA MOD.CON POTENCIA REDUCIDA)	PLAQUE ENTREE AIR RESISTANCES (POUR MOD.AVEC PUISSANCE REDUITE)
16	146233	BICR.HEX SCREW DIN933-8 M6X15	TOR.EX.DIN933-8.8 B.TRI.M 6X15	VIS HEX DIN933-8.8 BICR.M6X15
17	332551	LEG SCREW	TORNILLO PATA	VIS PIED
18	544155	LINT FILTER POLYESTER FABRIC 209 MICRONS	FILTRO BORRA TELA POLIESTER 209 MICRAS	FILTRE BOURRE POLYESTER (96,5 x 47,5)
19	196915	LOCK RE.20.00.02.05	CERRADURA REF.20.00.02.05 *	FERMETURE REF.20.00.02.05
21	600247	LOWER REAR COVER FROM MACHINE Nr: 2.290.591	TAPA POSTERIOR INFERIOR A PARTIR DE LA MAQUINA No : 2.290.591	COUVERCLE POSTERIEUR INF. A PARTIR DE LA MACHINE NR: 2.290.591
	541763	LOWER REAR COVER FROM MACHINE Nr: 2.290.001 TO MACHINE No : 2.290.590	TAPA POSTERIOR INFERIOR A PARTIR DE LA MAQUINA No : 2.290.001 HASTA LA MAQUINA No: 2.290.590	COUVERCLE POSTERIEUR INF. A PARTIR DE LA MACHINE NR: 2.290.001 JUSQU'A LA MACHINE No : 2.290.590
22	544940	MAGNET ø20x6 NEODYMIUM	IMAN ø20x6 NEODIMIO	AIMANT ø20X6 NÉODYME
23	559088	MAGNET 25x7	IMAN 25x7 REF. IMA25NdCv NEODIMIO	AIMANT 25x7
24	544007	MICROSWITCH BRACKET	SOPORTE MINIRRUPTOR	SUPPORT MINIRRUPTEUR
25	624049	PLAIN WASHER DIN 9021 M5 TRIVALENT (extØ	ARANDELA PLANA DIN 9021 M5 TRIVALENTE (e	RONDELLE PIANE DIN 9021 M5 TRIVALENT (ex
26	336081	PRESSURE SWITCH INTAKE	TOMA PRESOSTATO	PRISE PRESSOSTAT

info@zipnasklade.ru
8(800)500-69-51

Nº	REF	DENOMINATION	DENOMINACIÓN	DENOMINATION
27	597120	RECESSED PULL FROM MACHINE Nr: 2.290.591	TIRADOR ENCASTRADO A PARTIR DE LA MAQUINA No : 2.290.591	POIGNÉE ENCASTRÉE A PARTIR DE LA MACHINE NR: 2.290.591
	304923	EMBEDED HADLE P2-41 FROM MACHINE Nr: 2.290.001 TO MACHINE No : 2.290.590	TIRADOR ENCASTRADO P2-41 A PARTIR DE LA MAQUINA No : 2.290.001 HASTA LA MAQUINA No: 2.290.590	POIGNÉE ENCASTRÉE P2-41 A PARTIR DE LA MACHINE NR: 2.290.001 JUSQU'A LA MACHINE No : 2.290.590
28	523936	RIVET 6,4X9,53	REMACHE 6,4X9,53	RIVET 6,4X9,53
29	552422	RIVET BODY:ALUMINUM (2,5% Mg)	REMACHE CUERPO:ALUMINIO (2,5% Mg)*	RIVET CORPS:ALUMINIUM (2,5% Mg)
30	552414	RIVET Briv ALUMINIUM (5% Mg)	REMACHE Briv ALUMINIO (5% Mg)	RIVET Briv ALUMINIUM (5% Mg)
31	542720	RIVET NUT M4 RIVKLE PLUS *	TUERCA REMACH.BOLLHOFF M4 34341040230	ECROU RIVETABLE M4 RIVKLE PLUS *
32	542233	RIVET NUT M5 RIVKLE PLUS	TUERCA REMACH.BOLLHOFF M5 34341050230	ECROU RIVETABLE M5 RIVKLE PLUS
33	552406	SCREW RE.E.I.ISO7380 A2-70 M5X12	TOR.RE.E.I.ISO7380 A2-70 M5X12 TORX.	VIS RE.E.I.ISO7380 A2-70 M5X12
34	597310	SCREW DIN 7380 M5x50 TRIVALENT	TORNILLO DIN 7380 M5x50 TRIVALENTE	VIS DIN 7380 M5x50 TRIVALENT
35	328237	SCREW T20 AR.18ESTR. M5X15	TORNILLO C.ALOM.T20 M5X15 (ESPECIAL)*	VIS T20 AR.18ESTR. M5X15
36	541771	SELECTOR BRACKET	SOPORTE SELECTOR	SUPPORT SELECTEUR
37	542837	SENSOR SUPPORT BOTTOM PANEL	SOPORTE SENSOR PANEL INFERIOR	SUPPORT CAPTEUR PANNEAU INFÉRIEUR
38	10015212	SET FRONT PANEL (PRE-COATED) (FOR ETL MODELS)	CONJUNTO PANEL FRONTAL (PRE-COATED) (PARA MODELOS ETL)	PANNEAU AVANT SET (PRE-COATED) (POUR MODÈLES ETL)
39	10117000	SET FRONT PANEL (INOX) (FOR ETL MODELS)	CONJUNTO PANEL FRONTAL (INOX) (PARA MODELOS ETL)	PANNEAU AVANT SET (INOX) (POUR MODÈLES ETL)
40	10315141	SET FRONT PANEL (PRE-COATED) (FOR CE MODELS) (FOR AGA MODELS)	CONJUNTO PANEL FRONTAL (PRE-COATED) (PARA MODELOS CE) (PARA MODELOS AGA)	PANNEAU AVANT SET (PRE-COATED) (POUR MODÈLES CE) (POUR MODÈLES AGA)
41	10315265	SET FRONT PANEL (INOX) (FOR CE MODELS) (FOR AGA MODELS)	CONJUNTO PANEL FRONTAL (INOX) (PARA MODELOS CE) (PARA MODELOS AGA)	PANNEAU AVANT SET (INOX) (POUR MODÈLES CE) (POUR MODÈLES AGA)

info@zipnasklade.ru
8(800)500-69-51

Nº	REF	DENOMINATION	DENOMINACIÓN	DENOMINATION
42	600213	OUTER SIDE COVER (INOX) FROM MACHINE Nr: 2.290.591	TAPA LATERAL EXTERIOR (INOX) A PARTIR DE LA MAQUINA No : 2.290.591	COUVERCLE LATERAL EXT. (INOX) A PARTIR DE LA MACHINE NR: 2.290.591
	547471	OUTER SIDE COVER (INOX) FROM MACHINE Nr: 2.290.001 TO MACHINE No : 2.290.590	TAPA LATERAL EXTERIOR (INOX) A PARTIR DE LA MAQUINA No : 2.290.001 HASTA LA MAQUINA No: 2.290.590	COUVERCLE LATERAL EXTERIEUR (INOX) A PARTIR DE LA MACHINE NR: 2.290.001 JUSQU'A LA MACHINE No : 2.290.590
43	600221	OUTER SIDE COVER (PRE-COATED) FROM MACHINE Nr: 2.290.591	TAPA LATERAL EXTERIOR (PRE-COATED) A PARTIR DE LA MAQUINA No : 2.290.591	COUVERCLE LATERAL EXT. (PRE-COATED) A PARTIR DE LA MACHINE NR: 2.290.591
	541300	OUTER SIDE COVER (PRE-COATED) FROM MACHINE Nr: 2.290.001 TO MACHINE No : 2.290.590	TAPA LATERAL EXTERIOR (PRE-COATED) A PARTIR DE LA MAQUINA No : 2.290.001 HASTA LA MAQUINA No: 2.290.590	COUVERCLE LATERAL EXT. (PRE-COATED) A PARTIR DE LA MACHINE NR: 2.290.001 JUSQU'A LA MACHINE No : 2.290.590
44	600346	SMOKE OUT SET	CONJUNTO SALIDA HUMOS	SMOKE OUT SET
45	542571	HIGHER COVER SET (PRE-COATED) (FOR MACHINES GAS HEATING)	CONJUNTO TAPA SUPERIOR (PRE-COATED) (PARA MODELOS CALEFACCION GAS)	ENSEMBLE COUVERCLE SUPERIEUR (PRE-COATED) (POUR MACHINES CHAUF.GAZ)
46	547539	UPPER COVER SET (INOX) (FOR MACHINES GAS HEATING)	CONJUNTO TAPA SUPERIOR (INOX) (PARA MODELOS CALEFACCION GAS)	ENSEMBLE COUVERCLE SUPERIEUR (INOX) (POUR MACHINES CHAUF.GAZ)
47	556845	HIGHER COVER SET (PRE-COATED) (FOR MACHINES ELECTR.HEATING)	CONJUNTO TAPA SUPERIOR (PRE-COATED) (PARA MODELOS CALEFAC.ELECTR.)	ENSEMBLE COUVERCLE SUPERIEUR (PRE-COATED) (POUR MACHINES CHAUF.ELECTR.)
48	556860	UPPER COVER SET (INOX) (FOR MACHINES ELECTR.HEATING)	CONJUNTO TAPA SUPERIOR (INOX) (PARA MODELOS CALEFAC.ELECTR.)	ENSEMBLE COUVERCLE SUPERIEUR (INOX) (POUR MACHINES CHAUF.ELECTR.)
49	596494	HIGHER COVER SET (INOX) (FOR MACHINES STEAM HEATING)	CONJUNTO TAPA SUPERIOR (INOX) (PARA MODELOS CALEF. VAPOR)	ENSEMBLE COUVERCLE SUPERIEUR (INOX) (POUR MACHINES CHAUF.VAPEUR)
50	596502	HIGHER COVER SET (PRE-COATED) (FOR MACHINES STEAM HEATING)	CONJUNTO TAPA SUPERIOR (PRE-COATED) (PARA MODELOS CALEF. VAPOR)	ENSEMBLE COUVERCLE SUPERIEUR (PRE-COATED) (POUR MACHINES CHAUF.VAPEUR)
51	541748	HIGHER REAR COVER (FOR ELECTRICAL AND GAS HEATING)	TAPA POSTERIOR SUPERIOR (PARA CALEFACCION ELECTR.Y GAS)	COUVERCLE POSTERIEUR SUPERIEUR (POUR CHAUFAGE ELECTRIQ.ET GAZ)
52	597872	HIGHER COVER SET (FOR MACHINES STEAM HEATING)	TAPA POSTERIOR SUPERIOR (PARA MODELOS CALEF. VAPOR)	ENSEMBLE COUVERCLE SUPERIEUR (POUR MACHINES CHAUF.VAPEUR)

info@zipnasklade.ru
8(800)500-69-51

Nº	REF	DENOMINATION	DENOMINACIÓN	DENOMINATION
53	149526	BICR.WASHER B DIN125-ST 6,4	ARAN.B DIN125-ST B.TRI. 6,4	BICR.WASHER B DIN125-ST 6,4
54	10071124	FUMES DUCT (FOR ETL MODELS)	CONDUCTO HUMOS (PARA MODELOS ETL)	CONDUIT FUMÉES (POUR MODÈLES ETL)

info@zipnasklade.ru
8(800)500-69-51

ED660 CE/AGA
Pag. 3

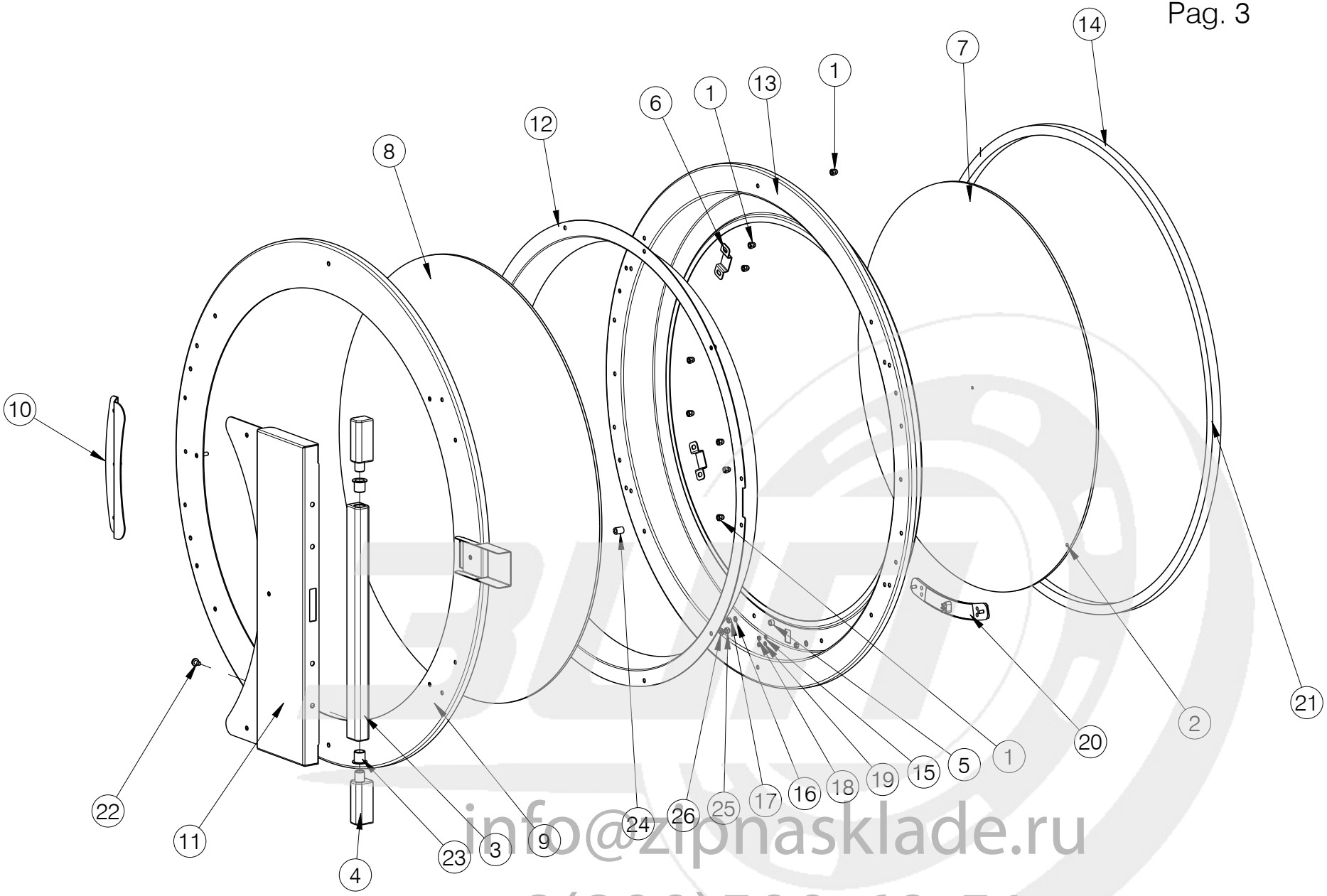

info@zipnasklade.ru
8(800)500-69-51

Nº	REF	DENOMINATION	DENOMINACIÓN	DENOMINATION
1	150144	BLIND NUT DIN1587 M 5 ZINC	TUERCA CIEGA DIN1587 M 5 ZINCADA	ECROU RIVETABLE DIN1587 M 5 ZINC
2	556621	SILICONE DOW CORNING 7091 BLACK 310ML	SILICONA DOW CORNING 7091 NEGRA 310ML	SILICONE DOW CORNING 7091 NOIRE 310ML
3	551895	DOOR GUIDE I	GUIA PUERTA I	GUIDE PORTE I
4	551879	DOOR HINGE	BISAGRA PUERTA	CHARNIERE PORTE
5	562462	DOOR INNER RING SEPARATOR	DISTANCIADOR ARO INTERIOR PUERTA	SEPARATEUR BAGUE INT. PORTE
6	553529	DOOR MAGNET END-PIECE	TOPE IMAN PUERTA	BUTEE AIMANT PORTE
7	544171	DOOR SPYHOLE	MIRILLA PUERTA	VITRE PORTE
8	553818	DOOR SPYHOLE	MIRILLA PUERTA	VITRE PORTE
9	553693	DOUBLE DOOR COVER SET	CONJUNTO TAPA PUERTA DOBLE	ENSEMBLE COUVERCLE PORTE DOUBLE
10	553727	DOUBLE DOOR HANDLE SET	CONJUNTO TIRADOR PUERTA DOBLE	ENSEMBLE POIGNEE PORTE DOUBLE
11	553743	DOUBLE DOOR HINGE BRACKET SET	CONJ. SOPORTE BISAGRAS PUERTA DOBLE	ENSEMBLE SUPPORT CHARNIERES PORTE DOUBLE
12	553776	DOUBLE DOOR INNER RING	ARO INTERIOR PUERTA DOBLE	BAGUE INTERIEUR PORTE DOUBLE
13	553768	DOUBLE DOOR RING	ARO PUERTA DOBLE	BAGUE PORTE DOUBLE
14	10536415	EPDM GASKET	JUNTA EPDM	JOINT EPDM
15	192708	EXTERNAL TOOTHED WASHER DIN 6798-A M3 TR	ARANDELA DENTADA EXTERIOR DIN 6798-A M3	RONDELLE DENTEE EXTERIEUR DIN 6798-A M3
16	149732	BICR.EXT TOOT.WASH DIN6798 M4	ARAN.DEN.EXT.B.TRI.DIN6798M 4	RONDEL.DEN.EX.BICR.DIN6798 M4
17	150185	BICR.HEX.NUT DIN934-8 M4	TUER.EX.DIN934-8 B.TRI.M 4	ECROU HEX.DIN934-8 BICR.M4
18	149906	INOX. HEX. NUT DIN 934 M-3	TUER.EX.DIN934 INOX A2-70 M 3	ECROU HEX. INOX DIN934 M-3
19	547380	HUMIDITY PROBE ELEC.INST.	INST.ELEC.SENSOR HUMEDAD	INST.ELEC. SENSEUR HUMIDITE
20	544098	HUMIDITY SENSOR SET	CONJUNTO SENSOR HUMEDAD	ENSEMBLE SENSEUR HUMIDITE
21	10050912	INSTANT ADHESIVE BASED ON ETHYL CYANOACR	ADHESIVO INST. CIANOCRILATO DE ETILO	ADHÉSIF INSTANTANÉ CYANOACRYLATE D'ACÉTA
22	328245	PAN HEAD SCREW T25 AR.18ESTR.M 6X10	TORNILLO C.ALOM.T25 M 6X10 (ESPECIAL)*	VIS À TÊTE PAN T25 AR.18ESTR.M 6X10
23	322925	SLEEVE IGLIDUR GFM-1416-17	COJINETE SKF PPMF 141617	FRETTE IGLIDUR GFM-1416-17
24	300467	CYLINDER SEPARATOR SS10-4 CPVC	SEPARADOR CILINDR.SS10-4 CPVC	SEPARATEUR CYLINDR.SS10-4 CPVC
25	176826	SELF-LOCKING NUT DIN985-8 B.TRI.M5	TUER.AUTOBL.DIN985-8 B.TRI.M5	ECROU AUTOBLOCANT DIN 985-8 B.TRI.M5
26	149534	BICR.WASHER B DIN125-ST 5,3	ARAN.B DIN125-ST BICR. 5,3	RONDELLE B BICR.DIN125-ST 5,3

info@zipnasklade.ru
8(800)500-69-51

USA/CAN

ED660 ETL
Pag. 3

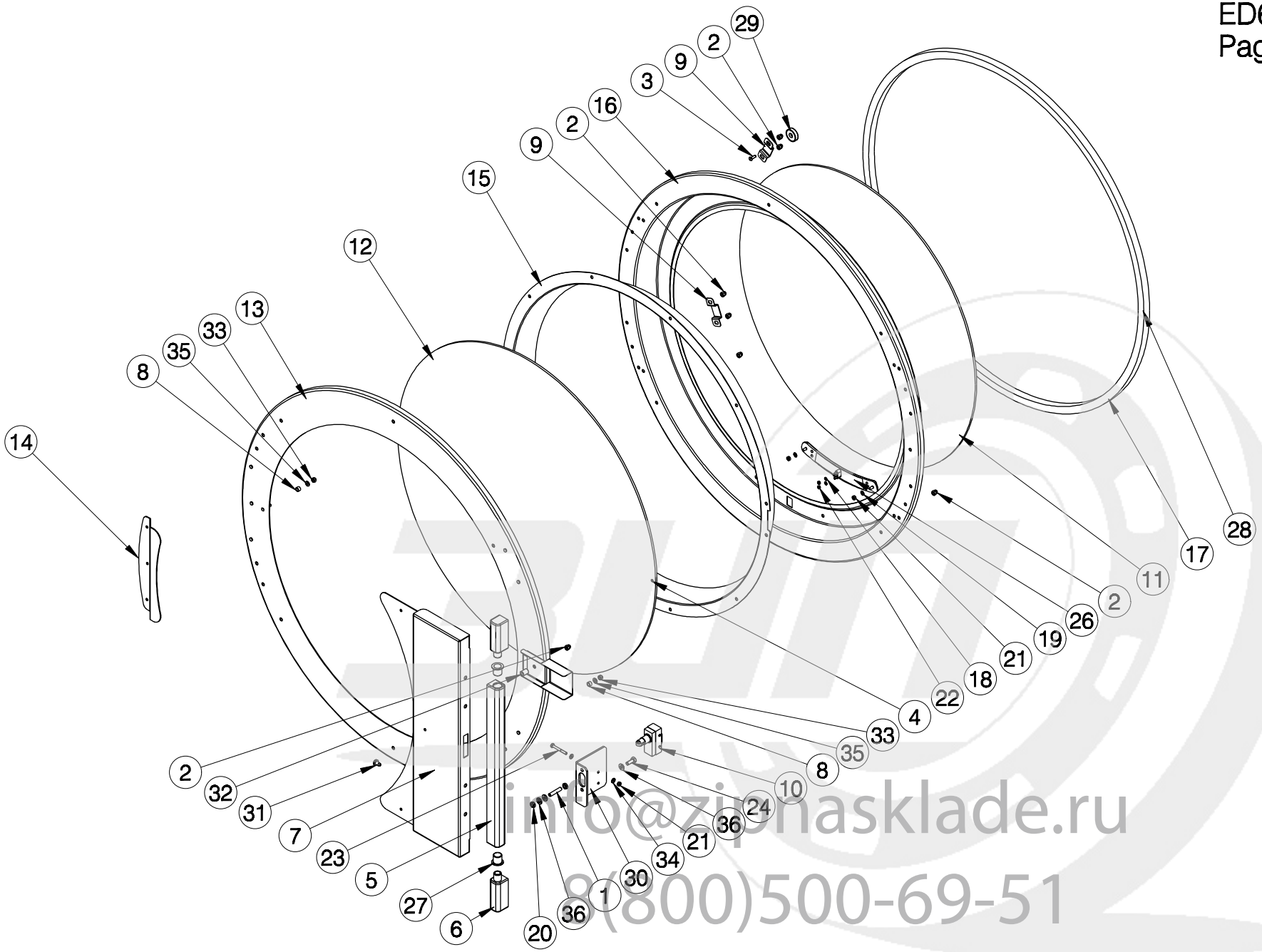

info@zipnasklade.ru
8(800)500-69-51

Nº	REF	DENOMINATION	DENOMINACIÓN	DENOMINATION
1	144147	ALLEN BUMP DIN913-10.9 M6X30	ESP.ALL.DIN913-10.9 M 6X30	GOUJON ALLEN DIN913-10.9 M6X30
2	150144	BLIND NUT DIN1587 M 5 ZINC	TUERCA CIEGA DIN1587 M 5 ZINCADA	ECROU RIVETABLE DIN1587 M 5 ZINC
3	147629	COUNTERSUNK SCREW DIN 963 4,8 M4x13 TRIV	TORNILLO AVELLANADO DIN 963 4,8 M4x13 TR	VIS FRAISEE DIN 963 4,8 M4x13 TRIVALENT
4	556621	SILICONE DOW CORNING 7091 BLACK 310ML	SILICONA DOW CORNING 7091 NEGRA 310ML	SILICONE DOW CORNING 7091 NOIRE 310ML
5	551895	DOOR GUIDE I	GUIA PUERTA I	GUIDE PORTE I
6	551879	DOOR HINGE	BISAGRA PUERTA	CHARNIERE PORTE
7	10151025	DOOR HINGE	BISAGRA PUERTA	CHARNIÈRE PORTE
8	562462	DOOR INNER RING SEPARATOR	DISTANCIADOR ARO INTERIOR PUERTA	SEPARATEUR BAGUE INT. PORTE
9	553529	DOOR MAGNET END-PIECE	TOPE IMAN PUERTA	BUTEE AIMANT PORTE
10	10182939	DOOR MICROSWITCH (FOR USA AND CANADA ONLY)	MICRORRUPTOR PUERTA (SOLO PARA USA Y CANADA)	MICRORUPTEUR PORTE (SEULEMENT POUR USA ET CANADA)
11	544171	DOOR SPYHOLE	MIRILLA PUERTA	VITRE PORTE
12	553818	DOOR SPYHOLE	MIRILLA PUERTA	VITRE PORTE
13	553693	DOUBLE DOOR COVER SET	CONJUNTO TAPA PUERTA DOBLE	ENSEMBLE COUVERCLE PORTE DOUBLE
14	553727	DOUBLE DOOR HANDLE SET	CONJUNTO TIRADOR PUERTA DOBLE	ENSEMBLE POIGNEE PORTE DOUBLE
15	553776	DOUBLE DOOR INNER RING	ARO INTERIOR PUERTA DOBLE	BAGUE INTERIEUR PORTE DOUBLE
16	553768	DOUBLE DOOR RING	ARO PUERTA DOBLE	BAGUE PORTE DOUBLE
17	10536415	EPDM GASKET	JUNTA EPDM	JOINT EPDM
18	192708	EXTERNAL TOOTHED WASHER DIN 6798-A M3 TR	ARANDELA DENTADA EXTERIOR DIN 6798-A M3	RONDELLE DENTEE EXTERIEUR DIN 6798-A M3
19	149732	BICR.EXT TOOT.WASH DIN6798 M4	ARAN.DEN.EXT.B.TRI.DIN6798M 4	RONDEL.DEN.EX.BICR.DIN6798 M4
20	10013126	HEX NUT DIN 439 A2-70 M6	TUERCA HEXAGONAL DIN 439 A2-70 M6	ECROU HEXAGONALE DIN 439 A2-70 M6
21	150185	BICR.HEX.NUT DIN934-8 M4	TUER.EX.DIN934-8 B.TRI.M 4	ECROU HEX.DIN934-8 BICR.M4
22	149906	INOX. HEX. NUT DIN 934 M-3	TUER.EX.DIN934 INOX A2-70 M 3	ECROU HEX. INOX DIN934 M-3
23	198051	BICR HEX SCREW DIN931-8.M4X35	TOR.EX.DIN931-4.8 B.TRI.M 4X35	VIS HEX BICR.DIN931-8.8 M 4X35
24	146233	BICR.HEX SCREW DIN933-8 M6X15	TOR.EX.DIN933-8.8 B.TRI.M 6X15	VIS HEX DIN933-8.8 BICR.M6X15
25	547380	HUMIDITY PROBE ELEC.INST.	INST.ELEC.SENSOR HUMEDAD	INST.ELEC. SENSEUR HUMIDITE
26	544098	HUMIDITY SENSOR SET	CONJUNTO SENSOR HUMEDAD	ENSEMBLE SENSEUR HUMIDITE
27	322925	SLEEVE IGLIDUR GFM-1416-17	COJINETE SKF PPMF 141617	FRETTE IGLIDUR GFM-1416-17
28	10050912	INSTANT ADHESIVE BASED ON ETHYL CYANOACR	ADHESIVO INST. CIANOCRILATO DE ETILO	ADHÉSIF INSTANTANÉ CYANOACRYLATE D'ACÉTA

info@zipnasklade.ru
8(800)500-69-51

Nº	REF	DENOMINATION	DENOMINACIÓN	DENOMINATION
29	559088	MAGNET 25x7	IMAN 25x7 REF. IMA25NdCv NEODIMIO	AIMANT 25x7
30	10005486	MINI SWITCH BRACKET	SOPORTE MINIRRUPTOR	SUPPORT MINIRRUPTEUR
31	328245	PAN HEAD SCREW T25 AR.18ESTR.M 6X10	TORNILLO C.ALOM.T25 M 6X10 (ESPECIAL)*	VIS À TÊTE PAN T25 AR.18ESTR.M 6X10
32	300467	CYLINDER SEPARATOR SS10-4 CPVC	SEPARADOR CILINDR.SS10-4 CPVC	SEPARATEUR CYLINDR.SS10-4 CPVC
33	176826	SELF-LOCKING NUT DIN985-8 B.TRI.M5	TUER.AUTOBL.DIN985-8 B.TRI.M5	ECROU AUTOBLOCANT DIN 985-8 B.TRI.M5
34	149476	BICR.WASHER B DIN125-ST 4,3	ARAN.B DIN125-ST B.TRI. 4,3	RONDELLE B DIN125-ST BICR.4,3
35	149534	BICR.WASHER B DIN125-ST 5,3	ARAN.B DIN125-ST BICR. 5,3	RONDELLE B BICR.DIN125-ST 5,3
36	149526	BICR.WASHER B DIN125-ST 6,4	ARAN.B DIN125-ST B.TRI. 6,4	BICR.WASHER B DIN125-ST 6,4

info@zipnasklade.ru
8(800)500-69-51

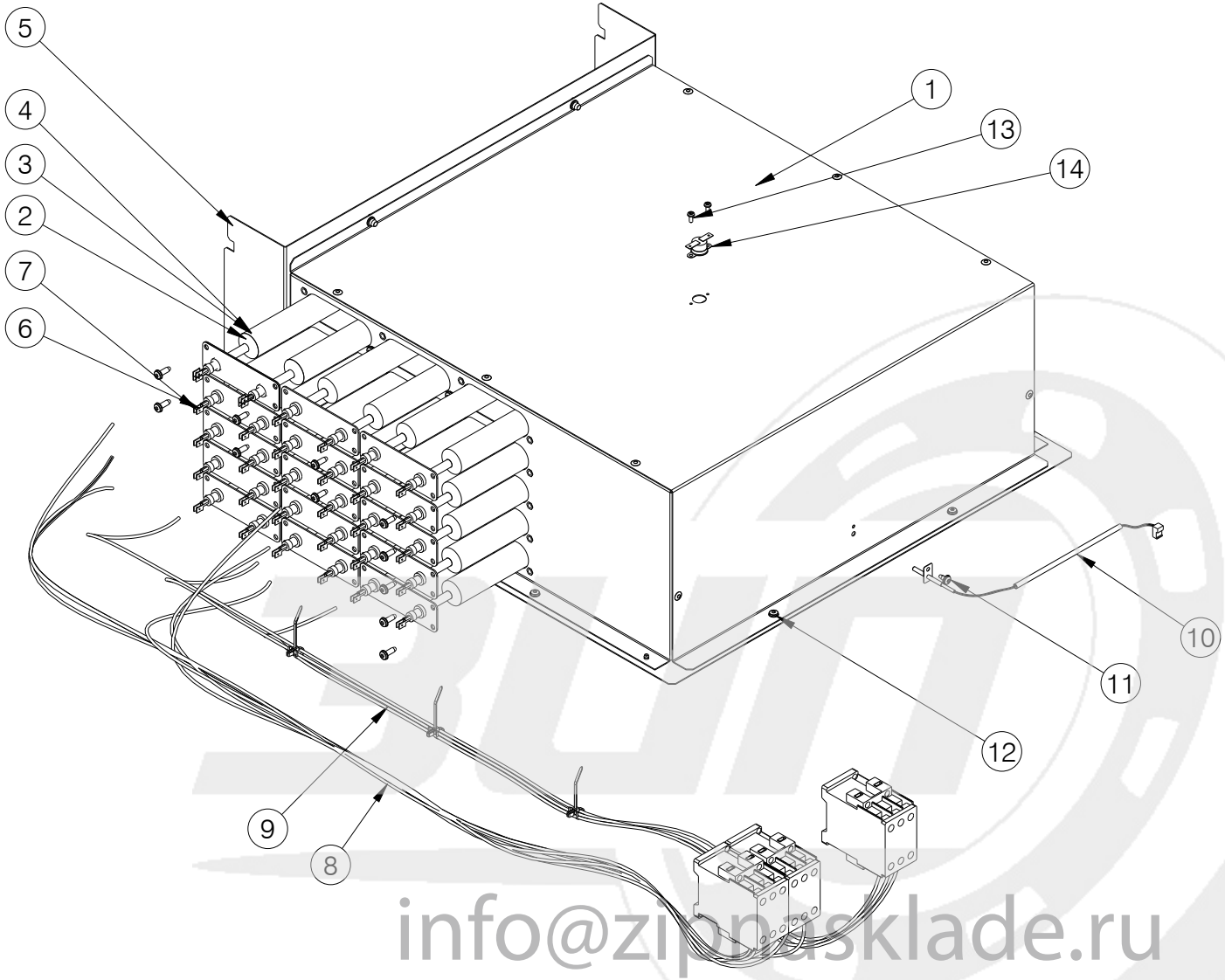

info@zipnasklade.ru
8(800)500-69-51

Nº	REF	DENOMINATION	DENOMINACIÓN	DENOMINATION
		FROM MACHINE Nr: 2.291.540	A PARTIR DE LA MAQUINA No : 2.291.540	A PARTIR DE LA MACHINE NR: 2.291.540
1	546036	ELECTRIC HEATING BOX	CAJA CALEFACCION ELECTRICA	BOITE CHAUFFAGE ELECTRIQUE
2	10025500	HEATER 208V 2050W (FOR 200V-208V)	CALEFACTOR 208V 2050W (PARA 200V-208V)	RESISTANCE 208V 2050W (POUR 200V-208V)
3	10025567	HEATER 230V 2050W (FOR 220V-230V) (FOR 380V-400V)	CALEFACTOR 230V 2050W (PARA 220V-230V) (PARA 380V-400V)	RESISTANCE 230V 2050W (POUR 220V-230V) (POUR 380V-400V)
4	10025575	HEATER 240V 2050W (FOR 240V) (FOR 415V)	CALEFACTOR 240V 2050W (PARA 240V) (PARA 415V)	RESISTANCE 240V 2050W (POUR 240V) (POUR 415V)
5	552364	HEATER AIR INLET PLATE	CHAPA ENTRADA AIRE RESISTENCIAS	PLAQUE ENTREE AIR RESISTANCES
6	10033470	HEATER BRIDGE WIRE (FOR 380V-400V-415V)	CABLE PUENTE CALEFACTOR (PARA 380V-400V-415V)	CABLE PONT RESISTANCE (POUR 380V-400V-415V)
7	10033520	HEATER BRIDGE WIRE (FOR 200V-208V-220V-230V-240V)	CABLE PUENTE CALEFACCION (PARA 200V-208V-220V-230V-240V)	CABLE PONT CHAUFFE (POUR 200V-208V-220V-230V-240V)
8	10097459	HEATING ELCTRICAL INSTALLATION (FOR 200V-208V-220V-230V-240V)	INSTALACIÓN ELÉCTRICA CALEFACCIÓN (PARA 200V-208V-220V-230V-240V)	INSTALLATION ÉLECTRIQUE CHAUFFAGE (POUR 200V-208V-220V-230V-240V)
9	10097798	HEATING ELCTRICAL INSTALLATION (FOR 380V-400V-415V)	INSTALACIÓN ELÉCTRICA CALEFACCIÓN (PARA 380V-400V-415V)	INSTALLATION ÉLECTRIQUE CHAUFFAGE (POUR 380V-400V-415V)
10	546689	INLET TEMPERATURE PROBE ELEC.INST.	INST. ELEC. SONDA TEMPERATURA ENTRADA	INST.ELEC. SONDE TEMPERATURE ENTREE
11	183400	PLATE SCREW ST-4, 20 P.F. C/AL.T25	TORNILLO CHAPA ST-4 (ESPECIAL)*	VIS PLAQUE ST-4, 20 P.F. C/AL.T25
12	328237	SCREW T20 AR.18ESTR. M5X15	TORNILLO C.ALOM.T20 M5X15 (ESPECIAL)*	VIS T20 AR.18ESTR. M5X15
13	559880	SCREW FT85T 3X6	TORNILLO FT85T 3X6 (ESPECIAL)	VIS FT85T 3X6
14	572743	THERMOSTAT 36TXE21 200ºC (200ºC)	TERMOSTATO 36TXHE21 (200ºC)	THERMOSTAT 36TXE21 (200ºC)
		WITHOUT ILLUSTRATION	SIN ILUSTRACION	SANS ILLUSTRATION
	10025708	HEATING BRIDGE	PUENTE CALEFACTORES	PONT CHAUFFAGE

info@zipnasklade.ru
8(800)500-69-51

Nº	REF	DENOMINATION	DENOMINACIÓN	DENOMINATION
		FROM MACHINE Nr: 2.290.001 TO MACHINE No : 2.291.539	A PARTIR DE LA MAQUINA No : 2.290.001 HASTA LA MAQUINA No: 2.291.539	A PARTIR DE LA MACHINE NR: 2.290.001 JUSQU'A LA MACHINE No : 2.291.539
1	546036	ELECTRIC HEATING BOX	CAJA CALEFACCION ELECTRICA	BOITE CHAUFFAGE ELECTRIQUE
2	567289	ELECTRIC ELEMENT 2050W 208V (FOR 200V-208V)	RESISTENCIA ELECTRICA 2050W 208V (PARA 200V-208V)	RESISTANCE ELECTRIQUE 2050W 208V (POUR 200V-208V)
3	567297	ELECTRIC ELEMENT 2050W 230V (FOR 220V-230V) (FOR 380V-400V)	RESISTENCIA ELECTRICA 2050W 230V (PARA 220V-230V) (PARA 380V-400V)	RESISTANCE ELECTRIQUE 2050W 230V (POUR 220V-230V) (POUR 380V-400V)
4	567305	ELECTRIC ELEMENT 2050W 240V (FOR 240V) (FOR 415V)	RESISTENCIA ELECTRICA 2050W 240V (PARA 240V) (PARA 415V)	RESISTANCE ELECTRIQUE 2050W 240V (POUR 240V) (POUR 415V)
5	552364	HEATER AIR INLET PLATE	CHAPA ENTRADA AIRE RESISTENCIAS	PLAQUE ENTREE AIR RESISTANCES
6	546382	HEATER BRIDGE WIRE (FOR 380V-400V-415V)	CABLE PUENTE CALEFACTOR (PARA 380V-400V-415V)	CABLE PONT RESISTANCE (POUR 380V-400V-415V)
7	546390	HEATER BRIDGE WIRE (FOR 200V-208V-220V-230V-240V)	CABLE PUENTE CALEFACTOR (PARA 200V-208V-220V-230V-240V)	CABLE PONT RESISTANCE (POUR 200V-208V-220V-230V-240V)
8	546465	HEATING ELEC.INST. (FOR 200V-208V-220V-230V-240V)	INST. ELEC. CALEFACCION (PARA 200V-208V-220V-230V-240V)	INST.ELEC. CHAUFFAGE (POUR 200V-208V-220V-230V-240V)
9	546473	HEATING ELEC.INST. (FOR 380V-400V-415V)	INST. ELEC. CALEFACCION (PARA 380V-400V-415V)	INST.ELEC. CHAUFFAGE (POUR 380V-400V-415V)
10	546689	INLET TEMPERATURE PROBE ELEC.INST.	INST. ELEC. SONDA TEMPERATURA ENTRADA	INST.ELEC. SONDE TEMPERATURE ENTREE
11	183400	PLATE SCREW ST-4, 20 P.F. C/AL.T25	TORNILLO CHAPA ST-4 (ESPECIAL)*	VIS PLAQUE ST-4, 20 P.F. C/AL.T25
12	328237	SCREW T20 AR.18ESTR. M5X15	TORNILLO C.ALOM.T20 M5X15 (ESPECIAL)*	VIS T20 AR.18ESTR. M5X15
13	559880	SCREW FT85T 3X6	TORNILLO FT85T 3X6 (ESPECIAL)	VIS FT85T 3X6
14	572743	THERMOSTAT 36TXE21 200ºC (200ºC)	TERMOSTATO 36TXHE21 (200ºC)	THERMOSTAT 36TXE21 (200ºC)

info@zipnasklade.ru
8(800)500-69-51

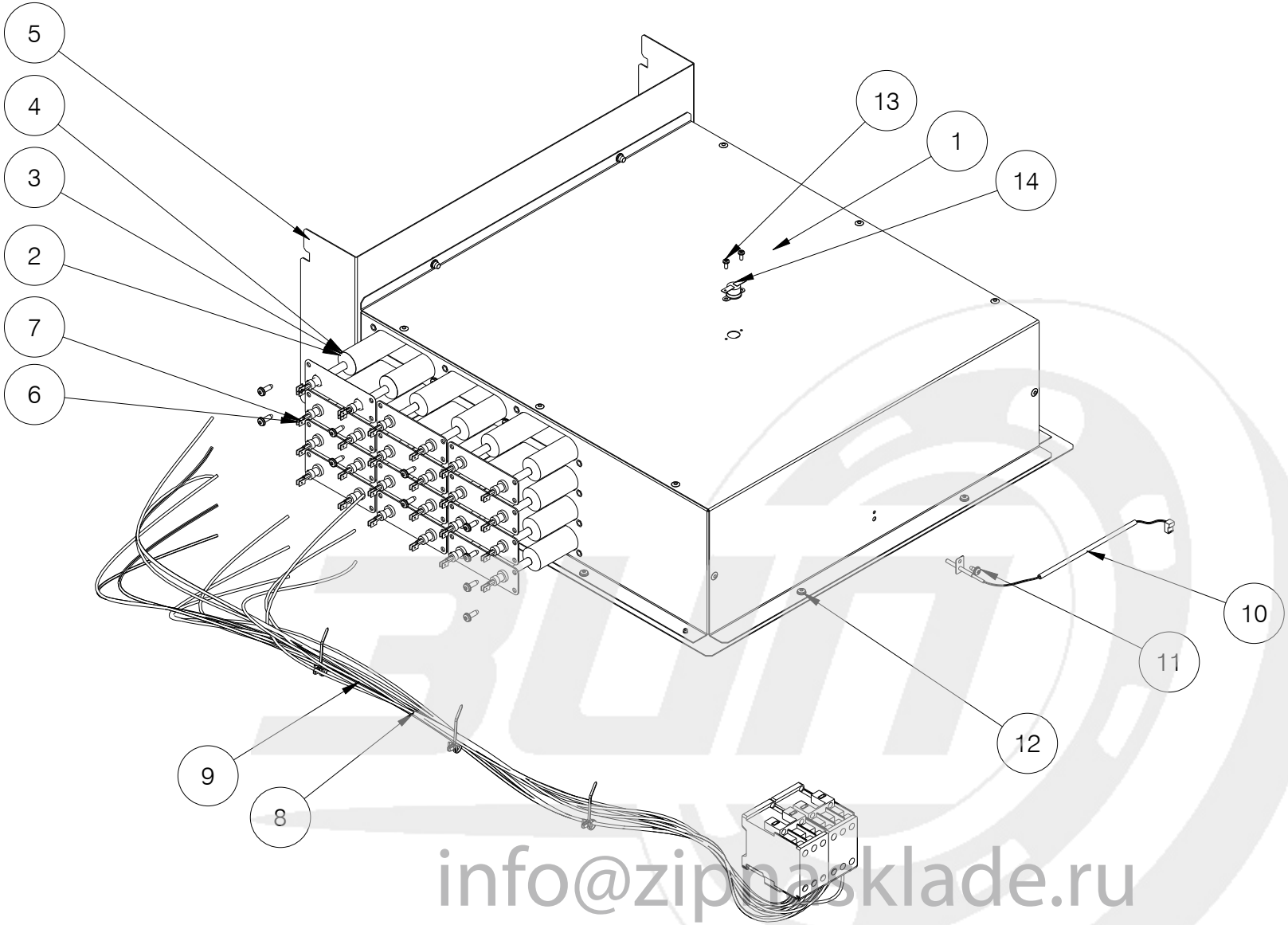

info@zipposklade.ru
8(800)500-69-51

Nº	REF	DENOMINATION	DENOMINACIÓN	DENOMINATION
		FROM MACHINE Nr: 2.291.540	A PARTIR DE LA MAQUINA No : 2.291.540	A PARTIR DE LA MACHINE NR: 2.291.540
1	546366	ELECTRIC HEATING BOX	CAJA CALEFACCION ELECTRICA	BOITE CHAUFFAGE ELECTRIQUE
2	10025500	HEATER 208V 2050W (FOR 200V-208V)	CALEFACTOR 208V 2050W (PARA 200V-208V)	RESISTANCE 208V 2050W (POUR 200V-208V)
3	10025567	HEATER 230V 2050W (FOR 380V-400V) (FOR 220V-230V)	CALEFACTOR 230V 2050W (PARA 380V-400V) (PARA 220V-230V)	RESISTANCE 230V 2050W (POUR 380V-400V) (POUR 220V-230V)
4	10025575	HEATER 240V 2050W (FOR 240V) (FOR 415V)	CALEFACTOR 240V 2050W (PARA 240V) (PARA 415V)	RESISTANCE 240V 2050W (POUR 240V) (POUR 415V)
5	556548	HEATER AIR INLET PLATE	CHAPA ENTRADA AIRE RESISTENCIAS	PLAQUE ENTREE AIR RESISTANCES
6	546382	HEATER BRIDGE WIRE (FOR 380V-400V-415V)	CABLE PUENTE CALEFACTOR (PARA 380V-400V-415V)	CABLE PONT RESISTANCE (POUR 380V-400V-415V)
7	10033520	HEATER BRIDGE WIRE (FOR 200V-208V-220V-230V-240V)	CABLE PUENTE CALEFACCION (PARA 200V-208V-220V-230V-240V)	CABLE PONT CHAUFFE (POUR 200V-208V-220V-230V-240V)
8	10097343	HEATING ELCTRICAL INSTALLATION (FOR 380V-400V-415V)	INSTALACIÓN ELÉCTRICA CALEFACCIÓN (PARA 380V-400V-415V)	INSTALLATION ÉLECTRIQUE CHAUFFAGE (POUR 380V-400V-415V)
9	10098747	HEATING ELCTRICAL INSTALLATION (FOR 200V-208V-220V-230V-240V)	INSTALACIÓN ELÉCTRICA CALEFACCIÓN (PARA 200V-208V-220V-230V-240V)	INSTALLATION ÉLECTRIQUE CHAUFFAGE (POUR 200V-208V-220V-230V-240V)
10	546689	INLET TEMPERATURE PROBE ELEC.INST.	INST. ELEC. SONDA TEMPERATURA ENTRADA	INST.ELEC. SONDE TEMPERATURE ENTREE
11	183400	PLATE SCREW ST-4, 20 P.F. C/AL.T25	TORNILLO CHAPA ST-4 (ESPECIAL)*	VIS PLAQUE ST-4, 20 P.F. C/AL.T25
12	328237	SCREW T20 AR.18ESTR. M5X15	TORNILLO C.ALOM.T20 M5X15 (ESPECIAL)*	VIS T20 AR.18ESTR. M5X15
13	559880	SCREW FT85T 3X6	TORNILLO FT85T 3X6 (ESPECIAL)	VIS FT85T 3X6
14	572743	THERMOSTAT 36TXE21 200ºC (200ºC)	TERMOSTATO 36TXHE21 (200ºC)	THERMOSTAT 36TXE21 (200ºC)
		WITHOUT ILLUSTRATION	SIN ILUSTRACION	SANS ILLUSTRATION
	10025708	HEATING BRIDGE	PUENTE CALEFACTORES	PONT CHAUFFAGE

info@zipnasklade.ru
8(800)500-69-51

Nº	REF	DENOMINATION	DENOMINACIÓN	DENOMINATION
		FROM MACHINE Nr: 2.290.001 TO MACHINE No : 2.291.539	A PARTIR DE LA MAQUINA No : 2.290.001 HASTA LA MAQUINA No: 2.291.539	A PARTIR DE LA MACHINE NR: 2.290.001 JUSQU'A LA MACHINE No : 2.291.539
1	546366	ELECTRIC HEATING BOX	CAJA CALEFACCION ELECTRICA	BOITE CHAUFFAGE ELECTRIQUE
2	567289	ELECTRIC ELEMENT 2050W 208V (FOR 200V-208V)	RESISTENCIA ELECTRICA 2050W 208V (PARA 200V-208V)	RESISTANCE ELECTRIQUE 2050W 208V (POUR 200V-208V)
3	567297	ELECTRIC ELEMENT 2050W 230V (FOR 380V-400V) (FOR 220V-230V)	RESISTENCIA ELECTRICA 2050W 230V (PARA 380V-400V) (PARA 220V-230V)	RESISTANCE ELECTRIQUE 2050W 230V (POUR 380V-400V) (POUR 220V-230V)
4	567305	ELECTRIC ELEMENT 2050W 240V (FOR 240V) (FOR 415V)	RESISTENCIA ELECTRICA 2050W 240V (PARA 240V) (PARA 415V)	RESISTANCE ELECTRIQUE 2050W 240V (POUR 240V) (POUR 415V)
5	556548	HEATER AIR INLET PLATE	CHAPA ENTRADA AIRE RESISTENCIAS	PLAQUE ENTREE AIR RESISTANCES
6	546382	HEATER BRIDGE WIRE (FOR 380V-400V-415V)	CABLE PUENTE CALEFACTOR (PARA 380V-400V-415V)	CABLE PONT RESISTANCE (POUR 380V-400V-415V)
7	546390	HEATER BRIDGE WIRE (FOR 200V-208V-220V-230V-240V)	CABLE PUENTE CALEFACTOR (PARA 200V-208V-220V-230V-240V)	CABLE PONT RESISTANCE (POUR 200V-208V-220V-230V-240V)
8	546457	HEATING ELEC.INST. (FOR 380V-400V-415V)	INST. ELEC. CALEFACCION (PARA 380V-400V-415V)	INST.ELEC. CHAUFFAGE (POUR 380V-400V-415V)
9	546465	HEATING ELEC.INST. (FOR 200V-208V-220V-230V-240V)	INST. ELEC. CALEFACCION (PARA 200V-208V-220V-230V-240V)	INST.ELEC. CHAUFFAGE (POUR 200V-208V-220V-230V-240V)
10	546689	INLET TEMPERATURE PROBE ELEC.INST.	INST. ELEC. SONDA TEMPERATURA ENTRADA	INST.ELEC. SONDE TEMPERATURE ENTREE
11	183400	PLATE SCREW ST-4, 20 P.F. C/AL.T25	TORNILLO CHAPA ST-4 (ESPECIAL)*	VIS PLAQUE ST-4, 20 P.F. C/AL.T25
12	328237	SCREW T20 AR.18ESTR. M5X15	TORNILLO C.ALOM.T20 M5X15 (ESPECIAL)*	VIS T20 AR.18ESTR. M5X15
13	559880	SCREW FT85T 3X6	TORNILLO FT85T 3X6 (ESPECIAL)	VIS FT85T 3X6
14	572743	THERMOSTAT 36TXE21 200ºC (200ºC)	TERMOSTATO 36TXHE21 (200ºC)	THERMOSTAT 36TXE21 (200ºC)

info@zipnasklade.ru
8(800)500-69-51

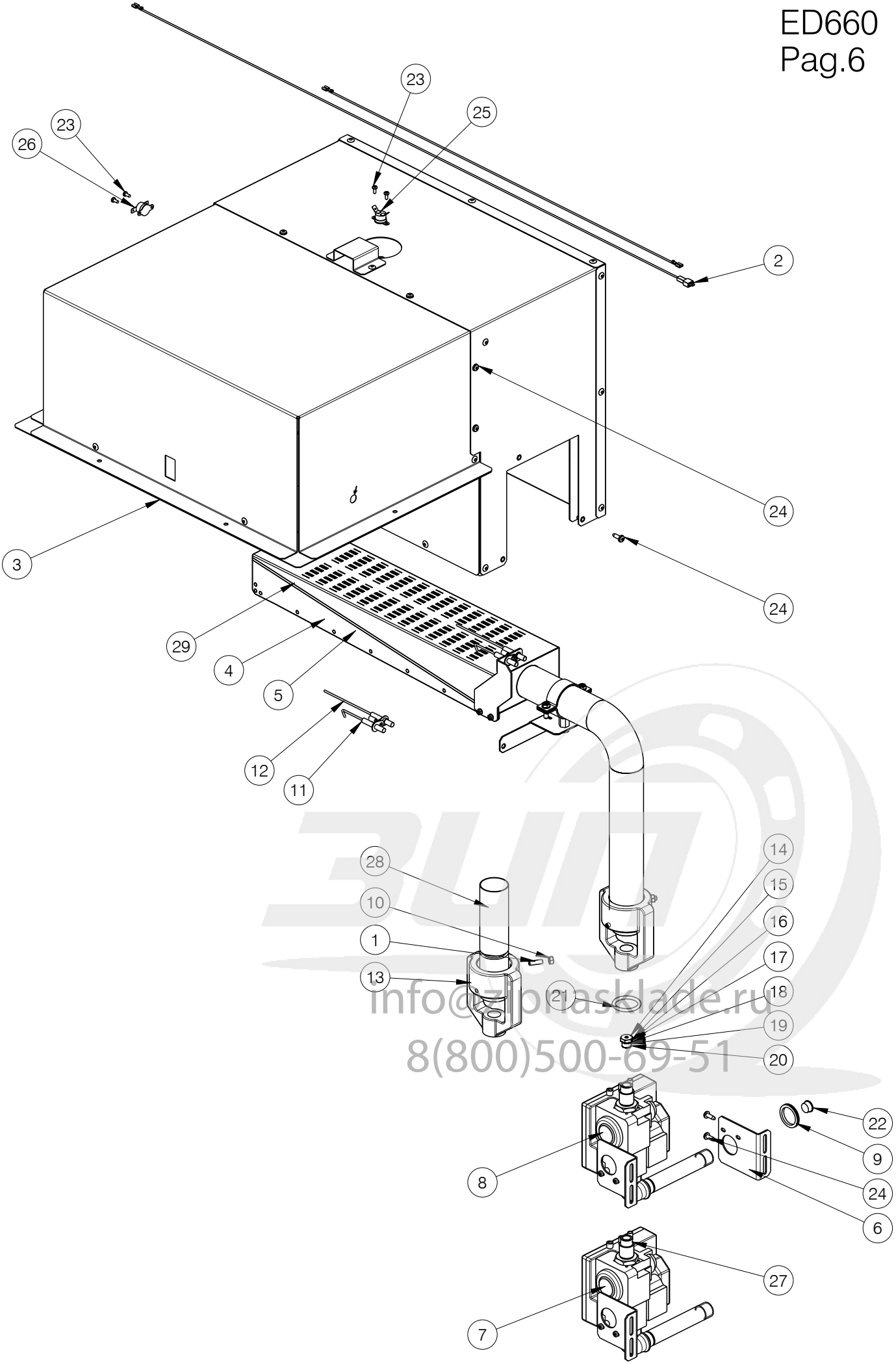

info@zipnasklade.ru
8(800)500-69-51

Nº	REF	DENOMINATION	DENOMINACIÓN	DENOMINATION
1	144113	ALLEN BUMP DIN 916 M-6X20 (GAS BURNER KIT INCLUDED)	ESP.ALL.DIN916-10.9 M 6X20 (INCLUIDO EN KIT QUEMADOR GAS)	GOUJON ALLEN DIN 916 M-6X20 (COMPRIS DANS KIT BRÛLEUR GAZ)
2	591867	HEATING ELEC.INST.	INST. ELEC. TERMOSTATO SEGURIDAD ED	INST.ELEC. CHAUFFAGE
3	603316	GAS BURNER SET	CONJUNTO CAJA GAS	SET BRULEUR GAZ
4	686527	CE-AGA GAS BURNER KIT (FOR CE MODELS) (FOR AGA MODELS)	KIT QUEMADOR GAS CE-AGA (PARA MODELOS CE) (PARA MODELOS AGA)	KIT BRÛLEUR GAZ CE-AGA (POUR MODÈLES CE) (POUR MODÈLES AGA)
5	686535	ETL GAS BURNER KIT (FOR ETL MODELS)	KIT QUEMADOR GAS ETL (PARA MODELOS ETL)	KIT BRÛLEUR GAZ ETL (POUR MODÈLES ETL)
6	540906	GAS ELECTROVALVE BRACKET	SOPORTE ELECTROVALVULA GAS	SUPPORT ELECTROVALVE GAZ
7	10013308	GAS VALVE ASSEMBLY (FOR AGA MODELS)	CONJUNTO VÁLVULA GAS (PARA MODELOS AGA)	ENSEMBLE VANNE GAZ (POUR MODÈLES AGA)
	556886	GAS VALVE CE/CSA (GAS VALVE ASSEMBLY INCLUDED)	VALVULA DE GAS CE/CSA (INCLUIDO EN CONJUNTO VALVULA GAS)	VALVE GAZ CE/CSA (COMPRIS DANS ENSEMBLE VANNE GAZ)
	614107	BURNER ELEC. CONTROL * (GAS VALVE ASSEMBLY NOT INCLUDED) (FOR AGA MODELS)	CONTROL ELECTRO. QUEMADOR TS15 (NO INCLUIDO EN CONJUNTO VALVULA GAS) (PARA MODELOS AGA)	CONTROLE ELEC. BRULEUR * (NON COMPRIS DANS ENSEMBLE VANNE GAZ) (POUR MODÈLES AGA)
8	10555324	GAS VALVE ASSEMBLY (FOR CE-ETL MODELS)	CONJUNTO VÁLVULA GAS (PARA MODELOS CE-ETL)	ENSEMBLE VANNE GAZ (POUR MODÈLES CE-ETL)
	556886	GAS VALVE CE/CSA (GAS VALVE ASSEMBLY INCLUDED)	VALVULA DE GAS CE/CSA (INCLUIDO EN CONJUNTO VALVULA GAS)	VALVE GAZ CE/CSA (COMPRIS DANS ENSEMBLE VANNE GAZ)
	542688	BURNER ELEC. CONTROL * (GAS VALVE ASSEMBLY INCLUDED) (FOR CE-ETL MODELS)	CONTROL ELECTRO. QUEMADOR * (INCLUIDO EN CONJUNTO VALVULA GAS) (PARA MODELOS CE-ETL)	CONTROLE ELEC. BRULEUR * (COMPRIS DANS ENSEMBLE VANNE GAZ) (POUR MODÈLES CE-ETL)
9	332262	CASTING MGS-2-01	MOLDURA MGS-2-01	MOULE MGS-2-01
10	150227	BICR HEX NUT DIN934-8 M6 (GAS BURNER KIT INCLUDED)	TUER.EX.DIN934-8 B.TRI.M 6 (INCLUIDO EN KIT QUEMADOR GAS)	ECROU HEX DIN934-8 BICR.M6 (COMPRIS DANS KIT BRÛLEUR GAZ)
11	553099	LIGHTING ELECTRODE (GAS BURNER KIT INCLUDED)	ELECTRODO ENCENDIDO (INCLUIDO EN KIT QUEMADOR GAS)	ELECTRODE ALLUMAGE (COMPRIS DANS KIT BRÛLEUR GAZ)
12	553081	LIGHTING ELECTRODE / IONIZATION * (GAS BURNER KIT INCLUDED)	ELECTRODO ENCENDIDO / IONIZACION * (INCLUIDO EN KIT QUEMADOR GAS)	ELECTRODE ALLUMAGE / IONISATION * (COMPRIS DANS KIT BRÛLEUR GAZ)
13	10556413	INJECTION SUPPORT (GAS BURNER KIT INCLUDED)	SOPORTE INYECCION (INCLUIDO EN KIT QUEMADOR GAS)	SUPPORT D'INJECTION (COMPRIS DANS KIT BRÛLEUR GAZ)
14	284729	INJECTOR (FOR CE MODELS) (FOR PROPANE GAS G31-50 MBAR)	INYECTOR (PARA MODELOS CE) (PARA GAS PROPANO G31-50 MBAR)	INJECTEUR (POUR MODÈLES CE) (POUR GAZ PROPANE G31-50 MBAR)

info@zipnasklade.ru
8(800)500-69-51

Nº	REF	DENOMINATION	DENOMINACIÓN	DENOMINATION
15	275792	INJECTOR (FOR CE MODELS) (FOR PROPANE GAS G31-37 MBAR)	INYECTOR (PARA MODELOS CE) (PARA GAS PROPANO G31-37 MBAR)	INJECTEUR (POUR MODÈLES CE) (POUR GAZ PROPANE G31-37 MBAR)
16	284703	INJECTOR (FOR ETL MODELS) (FOR AGA MODELS) (FOR PROPANE GAS)	INYECTOR (PARA MODELOS ETL) (PARA MODELOS AGA) (PARA GAS PROPANO)	INJECTEUR (POUR MODÈLES ETL) (POUR MODÈLES AGA) (POUR GAZ PROPANE)
17	548594	INJECTOR (FOR CE MODELS) (FOR NATURAL GAS G20)	INYECTOR (PARA MODELOS CE) (PARA GAS NATURAL G20)	INJECTEUR (POUR MODÈLES CE) (POUR GAZ NATUREL G20)
18	10156446	INJECTOR Ø4,8 (FOR ETL MODELS) (FOR NATURAL GAS)	INYECTOR Ø4,8 (PARA MODELOS ETL) (PARA GAS NATURAL)	INJECTEUR Ø4,8 (POUR MODÈLES ETL) (POUR GAZ NATUREL)
19	555011	INJECTOR (FOR CE MODELS) (FOR NATURAL GAS G25)	INYECTOR (PARA MODELOS CE) (PARA GAS NATURAL G25)	INJECTEUR (POUR MODÈLES CE) (POUR GAZ NATUREL G25)
20	284695	INJECTOR (FOR AGA MODELS) (FOR NATURAL GAS)	INYECTOR (PARA MODELOS AGA) (PARA GAS NATURAL)	INJECTEUR (POUR MODÈLES AGA) (POUR GAZ NATUREL)
21	306779	CONICAL PLUG D14,0 GPN 600B140	TAPON CONICO D14,0 GPN 600B140	BOUCHON CONIQUE D14,0 GPN 600B140
22	559880	SCREW FT85T 3X6	TORNILLO FT85T 3X6 (ESPECIAL)	VIS FT85T 3X6
23	328237	SCREW T20 AR.18ESTR. M5X15	TORNILLO C.ALOM.T20 M5X15 (ESPECIAL)*	VIS T20 AR.18ESTR. M5X15
24	546713	THERMOSTAT 36TXE21 180ºC (180ºC)	TERMOSTATO 36TXHE21 22541 (180ºC)	THERMOSTAT 36TXE21 (180ºC)
25	572743	THERMOSTAT 36TXE21 200ºC (200ºC)	TERMOSTATO 36TXHE21 (200ºC)	THERMOSTAT 36TXE21 (200ºC)
26	306993	THREAD SEALANT	SELLADOR DE ROSCAS	SELLADOR DE ROSCAS
27	10612406	TORIC GASKET 32x41x4,5 (FOR ETL MODELS)	JUNTA TORICA 32x41x4,5 NBR70SH (PARA MODELOS ETL)	JOINT TORIQUE 32x41x4,5 (POUR MODÈLES ETL)
28	10612398	VENTURI TUBE (GAS BURNER KIT INCLUDED) FROM MACHINE Nr: 2.290.372	TUBO VENTURI (INCLUIDO EN KIT QUEMADOR GAS) A PARTIR DE LA MAQUINA No : 2.290.372	VENTURI TUBE (COMPRIS DANS KIT BRÛLEUR GAZ) A PARTIR DE LA MACHINE NR: 2.290.372
29	10554350	BURNER FROM MACHINE Nr: 2.290.372	QUEMADOR A PARTIR DE LA MAQUINA No : 2.290.372	BRÛLEUR A PARTIR DE LA MACHINE NR: 2.290.372

info@zipnasklade.ru
8(800)500-69-51

Nº	REF	DENOMINATION	DENOMINACIÓN	DENOMINATION
		GAS CONVERSION KITS	KITS CAMBIO GAS	KITS CHANGEMENT GAZ
	792366	GAS CONVERSION KIT ED660 A NATURAL G20	KIT CAMBIO GAS ED660 A NATURAL G20	KIT CONVERSION GAZ ED660 A NATURAL G20
	792374	GAS CONVERSION KIT ED660 TO NATURAL G25	KIT CAMBIO GAS ED660 A NATURAL G25	KIT CONVERSION GAZ ED660 A NATURAL G25
	792382	GAS CONVERSION KIT ED660 TO PROP. G3137	KIT CAMBIO GAS ED660 A PROPANO G3137	KIT CONVERSION GAZ ED660 A PROP. G3137
	792390	GAS CONVERSION KIT ED660 TO PROP. G3150	KIT CAMBIO GAS ED660 A PROPANO G3150	KIT CONVERSION GAZ ED660 A PROP. G3150
	627067	GAS CONVERSION KIT ED660 TO AUS. NAT.GAS	KIT CAMBIO GAS ED660 A GAS NATURAL AUS.	KIT CONVERSION GAZ ED660 A GAZ NAT. AUS.
	627075	GAS CONVERSION KIT ED660 TO AUS.PROP.GAS	KIT CAMBIO GAS ED660 A GAS PROPANO AUS.	KIT CONVERSION GAZ ED660 A GAZ PROP.AUS.
	647545	GAS CONVERSION KIT ED660 TO ETL PROP.GAS	KIT CAMBIO GAS ED660 A PROPANO ETL	KIT CONVERSION GAZ ED660 A GAZ PROP. ETL
	647552	GAS CONVERSION KIT ED660 TO ETL NAT. GAS	KIT CAMBIO GAS ED660 A NATURAL ETL	KIT CONVERSION GAZ ED660 A GAZ NAT. ETL
		WITHOUT ILLUSTRATION	SIN ILUSTRACION	SANS ILLUSTRATION
	10042182	STRAIGHT FITTING G1/2-1/2 NPT (FOR ETL MODELS)	RACOR RECTO G1/2-1/2 NPT (PARA MODELOS ETL)	RACCORD DROIT G1/2-1/2 NPT (POUR MODÈLES ETL)

info@zipnasklade.ru
8(800)500-69-51

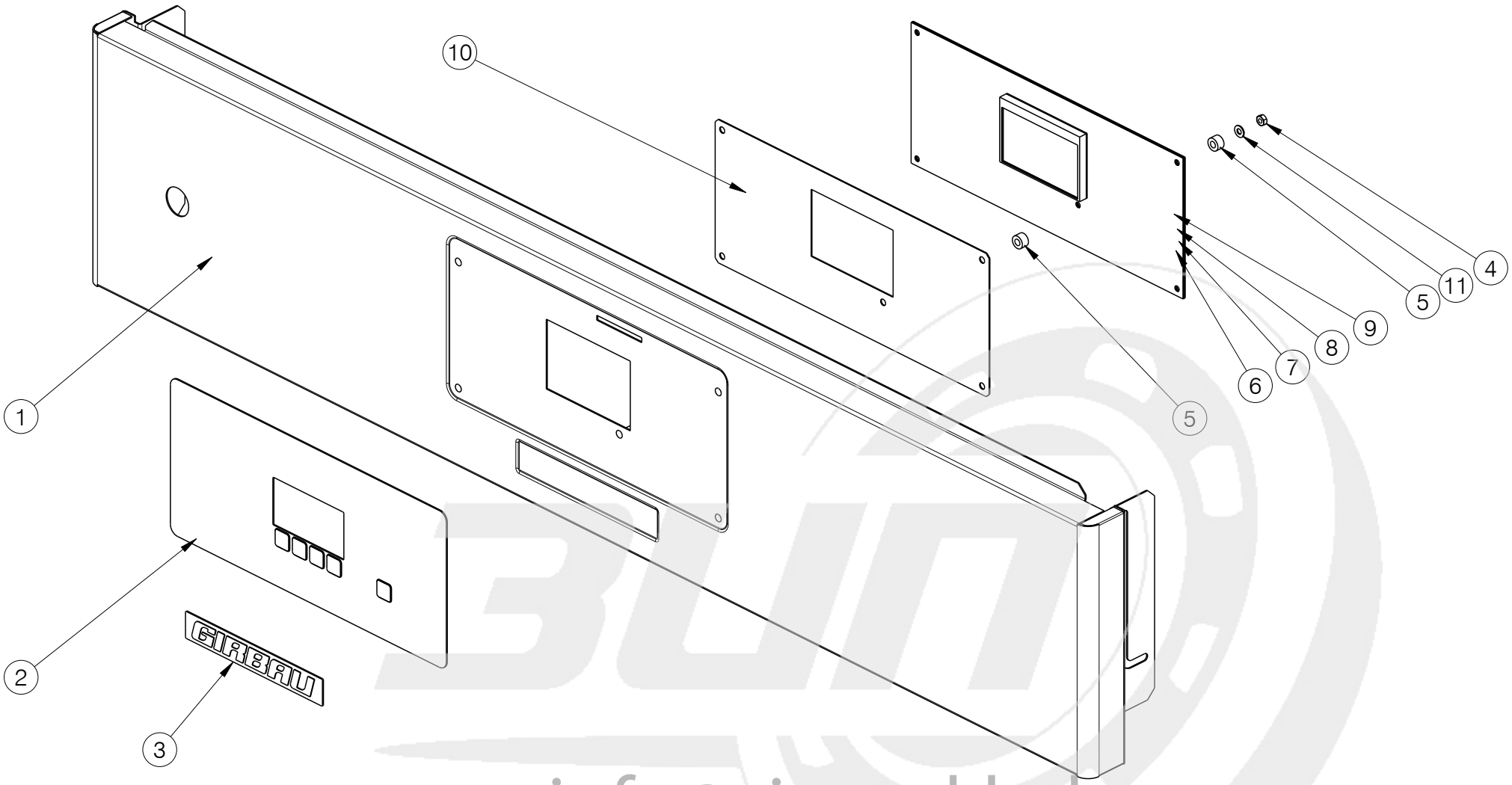

info@zipnasklade.ru
8(800)500-69-51

Nº	REF	DENOMINATION	DENOMINACIÓN	DENOMINATION
1	10260040	CONTROL PANNEL	PANEL DE MANDOS	PANNEAU COMMANDEMENT
2	547059	DRYER KEYBOARD ED	TECLADO SECADORA ED	CLAVIER SECHOIR ED
3	326074	PLATE GIRBAU	PLACA GIRBAU	PLAQUE GIRBAU
	326082	PLATE CONTINENTAL GIRBAU	PLACA CONTINENTAL GIRBAU	PLAQUE CONTINENTAL GIRBAU
	10065415	PLATE POSEIDON	PLACA POSEIDON	PLAQUE POSEIDON
4	150185	BICR.HEX.NUT DIN934-8 M4	TUER.EX.DIN934-8 B.TRI.M 4	ECROU HEX.DIN934-8 BICR.M4
5	547034	MICRO BOARD SPACER	SEPARADOR PLACA MICRO	SEPARATEUR PLAQUE MICRO
6	10143568	MICROPROCESSOR BOARD ED SC	PLACA MICROPROCESADOR ED SC	CARTE MICROPROCESSEUR ED SC
7	10095016	MICROPROCESSOR BOARD ED SC ADVANCE	PLACA MICROPROCESADOR ED SC ADVANCE	CARTE MICROPROCESSEUR ED SC ADVANCE
8	10241289	MICROPROCESSOR BOARD ED SC ALLWET	PLACA MICROPROCESADOR ED SC ALLWET	CARTE MICROPROCESSEUR ED SC ALLWET
9	10127439	MICROPROCESSOR BOARD ED SC AQUATOUCH	PLACA MICROPROCESADOR ED SC AQUATOUCH	CARTE MICROPROCESSEUR ED SC AQUATOUCH
10	547042	MICRO BOARD INSULATOR	AISLANTE PLACA MICRO	ISOLANT PLAQUE MICRO
11	149476	BICR.WASHER B DIN125-ST 4,3	ARAN.B DIN125-ST B.TRI. 4,3	RONDELLE B DIN125-ST BICR.4,3

info@zipnasklade.ru
8(800)500-69-51

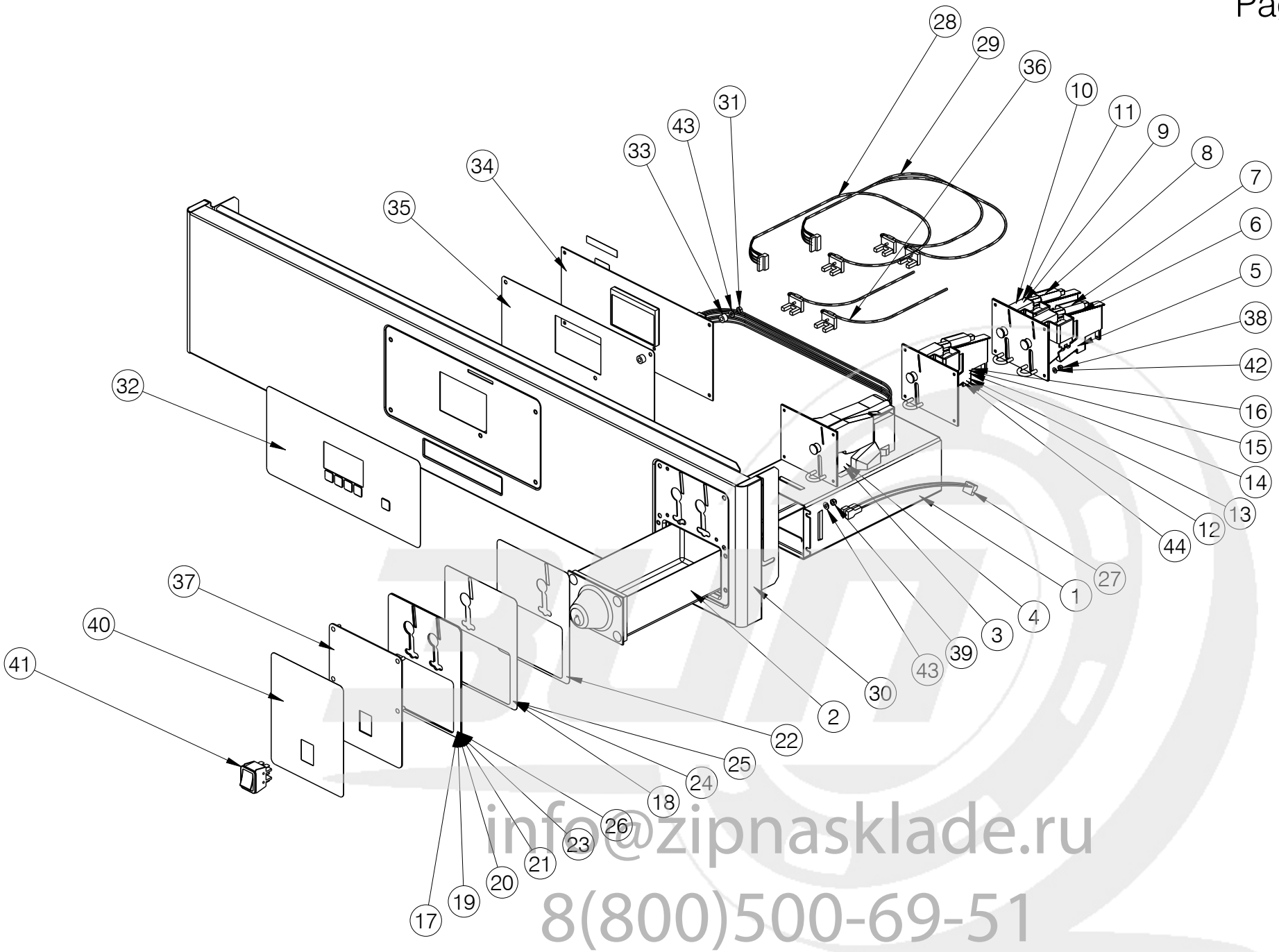

info@zipnasklade.ru
8(800)500-69-51

Nº	REF	DENOMINATION	DENOMINACIÓN	DENOMINATION
1	322313	COIN BOX SUPPORT	APOYO CAJON MONEDAS	APPUI BOITE MONNAIE
2	10006088	COIN BOX UG400B GI	CAJA MONEDAS UG400B GI	BOÎTE À MONNAIE UG400B GI
3	10222693	COIN METER EMP 500 EUROS	MONEDERO EMP 500	PURSE EMP 500
4	10222925	COIN METER EMP 500 EUROS	MONEDERO EMP 500	PURSE EMP 500
5	323741	COIN-METER F60.1 0,20/2,00EUR	MONEDERO F60.1 0,20/2,00EUR	MONNAYEUR F60.1 0,20/2,00EUR
	10190239	COIN METER F60.1 0.50C/1.00 EUR	MONEDERO F60.1 0.50C/1.00 EUR	MONNAYEUR F60.1 0.50C/1.00 EUR
6	326892	COIN-METER F60.1 0,25/1,00CAD	MONEDERO F60.1 0,25/1,00CAD	MONNAYEUR F60.1 0,25/1,00CAD
7	323659	COIN-METER F60.1 0,25/1,00USD	MONEDERO F60.1 0,25/1,00USD	MONNAYEUR F60.1 0,25/1,00USD
	530261	COIN-METER F60.1 0,25/1 USD THREAD BLOCK	MONEDERO F60.1 0,25/1 USD THREAD BLOCK	MONNAYEUR F60.1 0,25/1 USD THREAD BLOCK
8	326769	COIN-METER F60.1 0,50/1,00 GBP	MONEDERO F60.1 0,50/1,00GBP *	MONNAYEUR F60.1 0,50/1,00 GBP
9	326835	COIN-METER F60.1 1,00/5,00ILS	MONEDERO F60.1 1,00/5,00ILS *	MONNAYEUR F60.1 1,00/5,00 ILS
10	431007	COINMETER F60.1 100/500 JPY	MONEDERO F60.1 100/500 JPY *	MONNAYEUR F60.1 100/500 JPY
11	354035	COINMETER F60.1 10/50 NTD	MONEDERO F60.1 10/50NTD *	MONNAYEUR F60.1 10/50 NTD
12	323642	COIN-METER F60.11 0,25USD	MONEDERO F60.11 0,25USD	MONNAYEUR F60.11 0,25USD
	530253	COIN-METER F60.11 0,25USD THREAD BLOCKIN	MONEDERO F60.11 0,25USD THREAD BLOCKING	MONNAYEUR F60.11 0,25USD THREAD BLOCKING
13	326777	COIN-METER F60.11 100YEN	MONEDERO F60.11 100YEN *	MONNAYEUR F60.11 100YEN
14	344622	COIN-METER F60.11 10NTD	MONEDERO F60.11 10NTD *	MONNAYEUR F60.11 10NTD
15	10098655	COIN METER F60.11 TOKEN ECO MALAYSIA	MONEDERO F60.11 FICHA ECO MALASIA	MONNAYEUR F60.11 JETON ECO MALASIA
16	323733	COIN-METER F60.11W2000-TOKEN G	MONEDERO F60.11 FICHA GIRBAU *	MONNAYEUR F60.11W2000 JETON GI
17	339853	EUR COIN-METER PLATE	PLACA MONEDERO EUR	PLAQUE MONNAYEUR EUR
18	339861	COIN-METER PLATE FOR TOKEN GIR	PLACA MONEDERO FG	PLAQUE MONNAYEUR A/JETON GIRB.
19	339879	GBP COIN-METER PLATE	PLACA MONEDERO GBP	PLAQUE MONNAYEUR GBP
20	339887	NIS COIN-METER PLATE	PLACA MONEDERO NIS	PLAQUE MONNAYEUR NIS
21	354050	COINMETER PLATE CC-MD NTD	PLACA MONEDERO CC-MD NTD	PLAQUE MONNAYEUR CC-MD NTD
22	340125	COIN-METER PLATE	PLACA MONEDERO UNIVERSAL	PLAQUE MONNAYEUR
23	340109	USD COIN-METER PLATE	PLACA MONEDERO USD	PLAQUE MONNAYEUR USD
24	340117	USD COIN-METER PLATE	PLACA MONEDERO USD	PLAQUE MONNAYEUR USD
25	339895	YEN COIN-METER PLATE	PLACA MONEDERO YEN	PLAQUE MONNAYEUR YEN

info@zipnasklade.ru
8(800)500-69-51

Nº	REF	DENOMINATION	DENOMINACIÓN	DENOMINATION
26	557637	COINMETER LABEL CC-MD YEN	PLACA MONEDERO YEN	ETIQUETTE MONNAYEUR CC-MD YEN
27	570952	COIN-METER PLUG (WITH PUSH-BUTTON)	CONECTORA MONEDERO (CON PULSADOR)	CONNECTEUR MONNAYEUR (AVEC BOUTON-POUSSOIR)
28	322461	COIN-METER 1 PLUG	CONECTORA 1 MONEDERO	CONNECTEUR 1 MONNAYEUR
29	322453	COIN-METER 2 PLUG	CONECTORA 2 MONEDERO	CONNECTEUR 2 MONNAYEURS
30	10260024	CONTROL PANNEL	PANEL DE MANDOS	PANNEU COMMANDES
31	150185	BICR.HEX.NUT DIN934-8 M4	TUER.EX.DIN934-8 B.TRI.M 4	ECROU HEX.DIN934-8 BICR.M4
32	570960	KEYBOARD DRYER ED CC	TECLADO SECADORA ED CC	CLAVIER SECHOIR ED CC
33	547034	MICRO BOARD SPACER	SEPARADOR PLACA MICRO	SEPARATEUR PLAQUE MICRO
34	10143618	MICROPROCESSOR BOARD ED CC	PLACA MICROPROCESADOR ED CC	CARTE MICROPRECESSEUR ED CC
35	547042	MICRO BOARD INSULATOR	AISLANTE PLACA MICRO	ISOLANT PLAQUE MICRO
36	326124	OPTOISOLATOR FIXATION KIT	KIT FIJACION OPTOACOPLADOR *	KIT FIXATION OPTOISOLATEUR
37	327908	PUSH-BUTTON PLATE	PLACA PULSADOR	PLAQUE PULSATEUR
38	129692	SELF-LOCKING NUT DIN985-8 B.TRI.M 3	TUER.AUTOBL.DIN985-8 B.TRI.M 3	ECROU AUTOBLOCANT DIN985-8 B.TRI.M 3
39	132043	SELF-LOCKING NUT DIN985-8 B.TRI.M 4	TUER.AUTOBL.DIN985-8 B.TRI.M 4	ECROU AUTOBLOCANT DIN985-8 B.TRI.M 4
40	340158	START-STOP PLATE	PLACA MARCHA-PARO CP	PLAQUE MARCHE-ARRET
41	138339	PUSH-BUTTON C6061AL (WITH PUSH-BUTTON)	PULSADOR C6061AL * (CON PULSADOR)	BOUTON-POUSSOIR C6061AL (AVEC BOUTON-POUSSOIR)
42	149484	WASHER DIN 125B M3 ST TRIVALENT	ARANDELA DIN 125B M3 ST TRIVALENTE	RONDELLE DIN 125B M3 ST TRIVALENT
43	149476	BICR.WASHER B DIN125-ST 4,3	ARAN.B DIN125-ST B.TRI. 4,3	RONDELLE B DIN125-ST BICR.4,3
44	524157	COIN-METER F60.11 500 WON	MONEDERO F60.11 500 WON*	MONNAYEUR F60.11 500 WON

info@zipnasklade.ru
8(800)500-69-51

ED660 CC_VN
Pag.08

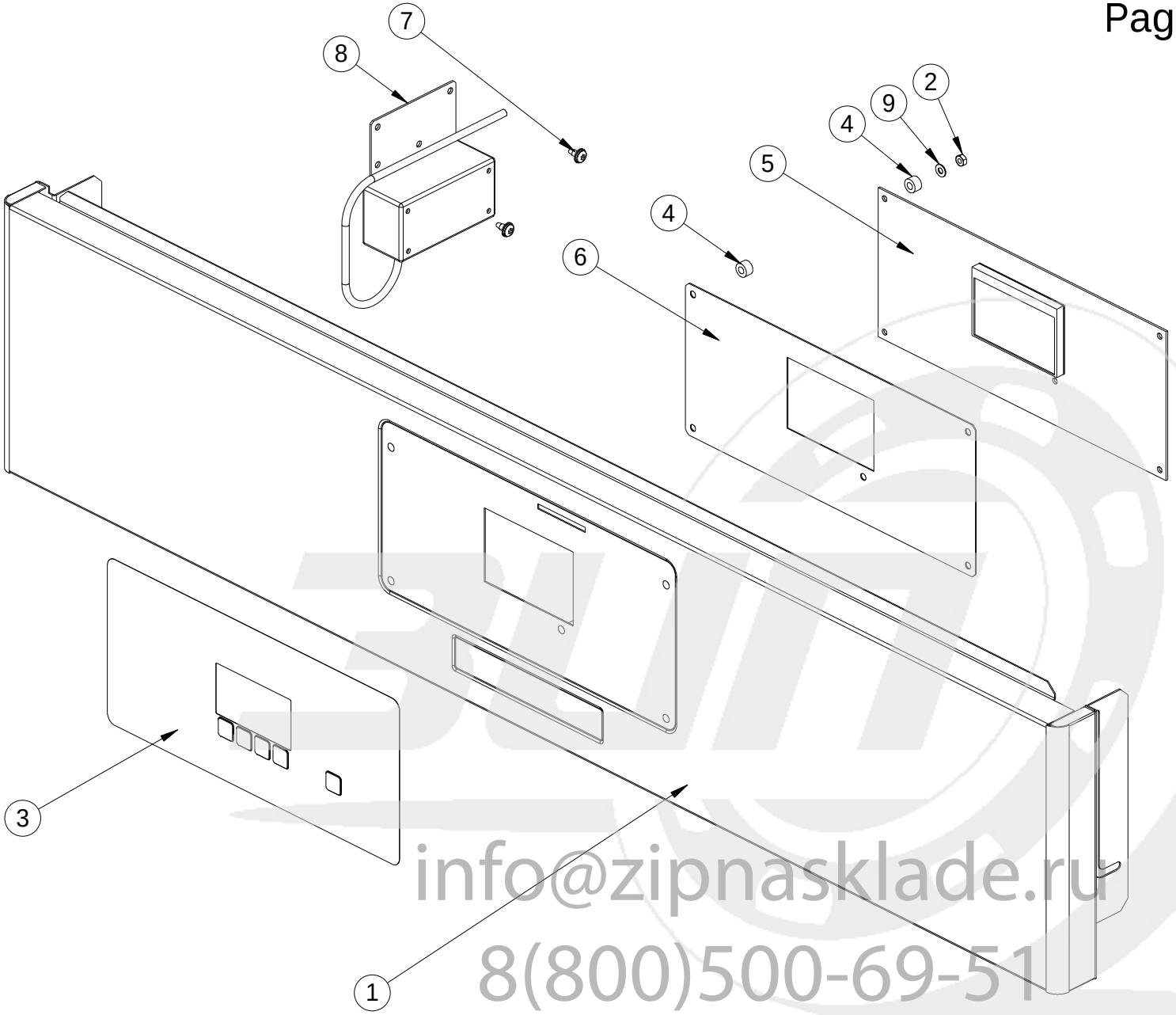

info@zipnasklade.ru
8(800)500-69-51

Nº	REF	DENOMINATION	DENOMINACIÓN	DENOMINATION
1	10006765	CONTROL PANEL	PANEL MANDOS	PANNEAU COMMANDES
2	150185	BICR.HEX.NUT DIN934-8 M4	TUER.EX.DIN934-8 B.TRI.M 4	ECROU HEX.DIN934-8 BICR.M4
3	570960	KEYBOARD DRYER ED CC	TECLADO SECADORA ED CC	CLAVIER SECHOIR ED CC
4	547034	MICRO BOARD SPACER	SEPARADOR PLACA MICRO	SEPARATEUR PLAQUE MICRO
5	10143618	MICROPROCESSOR BOARD ED CC	PLACA MICROPROCESADOR ED CC	CARTE MICROPRECESSEUR ED CC
6	547042	MICRO BOARD INSULATOR	AISLANTE PLACA MICRO	ISOLANT PLAQUE MICRO
7	183400	PLATE SCREW ST-4, 20 P.F. C/AL.T25	TORNILLO CHAPA ST-4 (ESPECIAL)*	VIS PLAQUE ST-4, 20 P.F. C/AL.T25
8	439232	VENDING VN ASSEMBLY	CAJA VENDING VN	ENSEMBLE VENDING VN
9	149476	BICR.WASHER B DIN125-ST 4,3	ARAN.B DIN125-ST B.TRI. 4,3	RONDELLE B DIN125-ST BICR.4,3

info@zipnasklade.ru
8(800)500-69-51

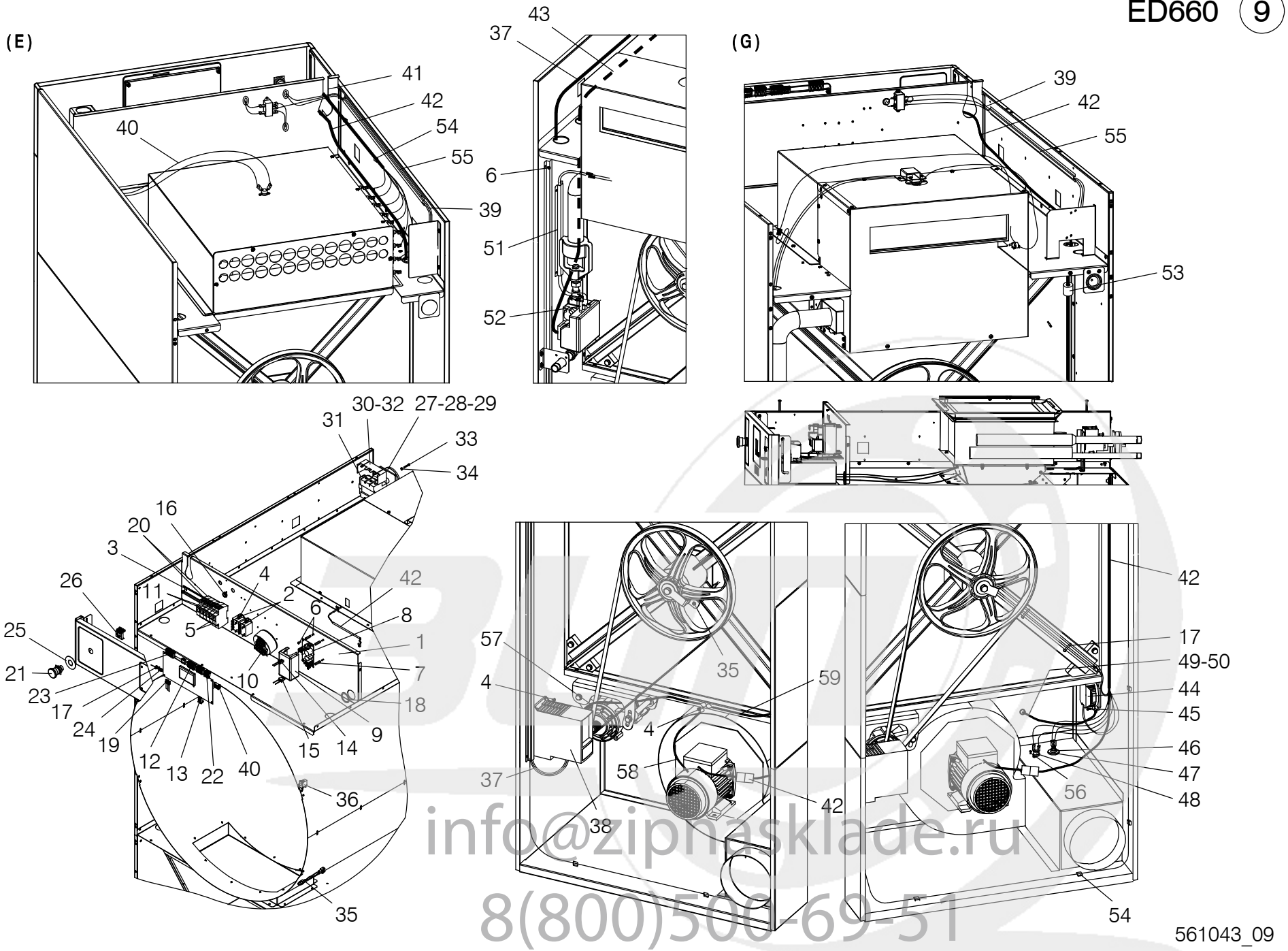

info@zipnasklade.ru
8(800)500-69-51

561043_09

Nº	REF	DENOMINATION	DENOMINACIÓN	DENOMINATION
		FROM MACHINE Nr: 2.291.540	A PARTIR DE LA MAQUINA No : 2.291.540	A PARTIR DE LA MACHINE NR: 2.291.540
1	541649	ELECTRIC CONTROL DIVIDER	SEPARADOR CUADRO ELECTRICO	SEPARATEUR PANNEAU ELEC.
2	322701	RELAY 12VDC	RELE 12VDC*	RELAIS 12VDC
3	245571	CONTACTOR FIXING PROFILE	PERFIL FIJACION CONTACTORES	PROFILE FIXATION CONTACTEURS
4	183400	PLATE SCREW ST-4, 20 P.F. C/AL.T25	TORNILLO CHAPA ST-4 (ESPECIAL)*	VIS PLAQUE ST-4, 20 P.F. C/AL.T25
5	544411	AUTOMATIC SWITCH 0,5A (FOR 200V-208V-220V-230V-240V) (FOR 380V-400V-415V)	INTERRUPTOR AUT. 0,5A CURVA D* (PARA 200V-208V-220V-230V-240V) (PARA 380V-400V-415V)	INTERRUPTEUR AUT.0,5A (POUR 200V-208V-220V-230V-240V) (POUR 380V-400V-415V)
6	322693	SCREW PT KN35X10 WN1412	TORNILLO PT KN35X10 WN1412 (ESPECIAL)	VIS PT KN35X10 WN1412
7	322685	SEPARATOR HEX.HS6-8	SEPARADOR EXAGONAL HS6-8	SEPARATEUR HEX. HS6-8
8	332718	POWER SOURCE MW PS-25-12	FUENTE ALIMENT.MW PS-25-12	FONT ALIMENT.MW PS-25-12
9	326843	MICROPROCESSOR PLATE COVER	TAPA PLACA MICROPROCESADOR	COUVERCLE PLAQUE MICROPROSSEUR
10	10014439	TRANSFORMER 100VA 2x115V *	TRANSFORMADOR 100VA 2x115V *	TRANSFORMATEUR 100VA 2x115V *
11	518191	AUTOMATIC SWITCH 4A	INTERRUPTOR AUT. 4A CURVA D*	INTERRUPTEUR AUT. 4A
12	10035160	ELECT. INST. X11	INST. ELEC. X11	INST. ELEC. X11
13	10035152	ELEC. INST. X1	INST. ELEC. X1	INST. ELEC. X1
14	10034684	ELEC. INST. CONNECTOR X14	INST. ELEC. CONECTORA X14	INST. ELEC. CONNECTEUR X14
15	533273	PLUG ELEC.INST. X9	INST.ELEC.CONECTORA X9	INST.ELEC. CONNECTEUR X9
16	332601	SHEATH-LODGING DGB-7	PASAMUROS DGB-7	LOGEMENT DGB-7
17	140434	CLAMP 2221	BRIDA UNEX 2221 *	BRIDE 2221
18	552596	CASTING MGS 2X110	MOLDURA MGS 2X110	MOULE MGS 2X110
19	530519	IDENTIFICATION PLUG	CONECTORA IDENTIFICACION	CONNECTEUR IDENTIFICATION
20	518191	AUTOMATIC SWITCH 4A (FOR 200V-208V-220V-230V-240V) (FOR 380V-400V-415V) (FOR MACHINES ELECTR.HEATING)	INTERRUPTOR AUT. 4A CURVA D* (PARA 200V-208V-220V-230V-240V) (PARA 380V-400V-415V) (PARA MODELOS CALEFAC.ELECTR.)	INTERRUPTEUR AUT. 4A (POUR 200V-208V-220V-230V-240V) (POUR 380V-400V-415V) (POUR MACHINES CHAUF.ELECTR.)
21	341479	MUSHROOM PUSH BUTTON A223-M (FOR SMART CONTROL MODELS)	PUL.HONGO ENCL.A22E-M (PARA MODELOS CON SMART CONTROL)	PULSATEUR TYPE COUPE DE POING A22E-M (POUR MODELES AVEC SMART CONTROL)
22	546606	EMERGENCY STOP PLUG (FOR SMART CONTROL MODELS)	CONECTORA PARO EMERGENCIA (PARA MODELOS CON SMART CONTROL)	CONNECTEUR ARRET D'URGENCE (POUR MODELES AVEC SMART CONTROL)
	546663	EMERGENCY STOP PLUG (COIN CTRL MODELS ONLY)	CONECTORA PARO EMERGENCIA (PARA MODELOS A COIN CONTROL)	CONNECTEUR ARRET D'URGENCE (POUR MODELE COIN CONTROL)

info@zipnasklade.ru
8(800)500-69-51

Nº	REF	DENOMINATION	DENOMINACIÓN	DENOMINATION
23	546648	DOOR ELEC. INST. 4-6 (FOR CE MODELS) (FOR AGA MODELS)	INST. ELECT. PUERTAS 4-6 (PARA MODELOS CE) (PARA MODELOS AGA)	INST. ELEC. PORTES 4-6 (POUR MODÈLES CE) (POUR MODÈLES AGA)
	10049435	DOOR ELECTRICAL INSTALLATION (FOR ETL MODELS)	INSTALACIÓN ELÉCTRICA PUERTAS 4-6 (PARA MODELOS ETL)	INSTALLATION ÉLECTRIQUE PORTE (POUR MODÈLES ETL)
24	546689	INLET TEMPERATURE PROBE ELEC.INST.	INST. ELEC. SONDA TEMPERATURA ENTRADA	INST.ELEC. SONDE TEMPERATURE ENTREE
25	192294	YELLOW RING (FOR SMART CONTROL MODELS)	ARO AMARILLO (PARA MODELOS CON SMART CONTROL)	BAGUE JAUNE (POUR MODELES AVEC SMART CONTROL)
26	341503	CONNECTION BRACKET A22-3200 (FOR SMART CONTROL MODELS)	SOPORTE CONEXION A22-3200 (PARA MODELOS CON SMART CONTROL)	SUPPORT CONNEXION A22-3200 (POUR MODELES AVEC SMART CONTROL)
27	198861	GRAL.SWITCH P1-25/V/SVB (FOR MACHINES GAS HEATING)	INTERRUPT.GENERAL P1-25/V/SVB (PARA MODELOS CALEFACCION GAS)	INTERRUPTEUR GRAL.P1-25/V/SVB (POUR MACHINES CHAUF.GAZ)
28	300384	PAQUET.SWITCH P3-63/V/SVB (FOR 380V-400V-415V) (FOR MACHINES ELECTR.HEATING)	INTERRUPT.GENERAL P3-63/V/SVB* (PARA 380V-400V-415V) (PARA MODELOS CALEFAC.ELECTR.)	INTERRUPTEUR PAQUET.P3-63/V/SVB (POUR 380V-400V-415V) (POUR MACHINES CHAUF.ELECTR.)
29	300392	PAQUET.SWITCH P3-100/V/SVB (FOR 200V-208V-220V-230V-240V) (FOR MACHINES ELECTR.HEATING)	INTERRUPT.GENERAL P3-100/V/SVB* (PARA 200V-208V-220V-230V-240V) (PARA MODELOS CALEFAC.ELECTR.)	INTERRUP.PAQUET P3-100/V/SVB (POUR 200V-208V-220V-230V-240V) (POUR MACHINES CHAUF.ELECTR.)
30	302828	ACCESSOR.H-P3 (FOR MACHINES ELECTR.HEATING)	CUBREBORNES H-P3 MOELLER (PARA MODELOS CALEFAC.ELECTR.)	ACCESOR.H-P3 (POUR MACHINES CHAUF.ELECTR.)
31	198879	SECTION.NEUTRE N-P1Z (FOR 380V-400V-415V) (FOR MACHINES ELECTR.HEATING)	NEUTRO SECCIONABLE N-P1Z (PARA 380V-400V-415V) (PARA MODELOS CALEFAC.ELECTR.)	NEUTRE SECCON.N-P1Z (POUR 380V-400V-415V) (POUR MACHINES CHAUF.ELECTR.)
32	553826	ACCESSOR.H-P1 (FOR MACHINES GAS HEATING)	CUBREBORNES H-P1 MOELLER (PARA MODELOS CALEFACCION GAS)	ACCESOR.H-P1 (POUR MACHINES CHAUF.GAZ)
33	146183	BICR CYL SCREW DIN 84 M-4X25	TOR.CIL.DIN84-4.8 B.TRI.M 4X25	VIS CYL BICR DIN 84 M-4X25
34	132043	SELF-LOCKING NUT DIN985-8 B.TRI.M 4	TUER.AUTOBL.DIN985-8 B.TRI.M 4	ECROU AUTOBLOCANT DIN985-8 B.TRI.M 4
35	546697	TUMBLER ROTATION AND DOOR DETECTOR	DETECTOR PUERTA Y GIRO TAMBOR	DETECTEUR PORTE ET ROTATION TAMBOUR
36	543959	MINISWITCH CHERRY E69-83C (FOR CE MODELS) (FOR AGA MODELS)	MINIRRUPTOR CHERRY E69-83C * (PARA MODELOS CE) (PARA MODELOS AGA)	MINIRRUPTEUR CHERRY E69-83C (POUR MODÈLES CE) (POUR MODÈLES AGA)
37	10034429	INVERTER ELEC. INST. 4-6	INST. ELEC. VARIADOR 4-6	INST. ELEC. CONVERTISSEUR 4-6
38	535849	FREQ.INVERTER VLT FC-051 0.75kW	VARIADOR VLT FC-051 0.75kW *	VARIATEUR FREQ. VLT FC-051 0.75kW
39	10034858	TUMBLER MOTOR INVERTER ELEC.INST. 6 (INVERTER INCLUDED)	INST. ELEC. VARIADOR MOTOR TAMBOR 6 (INCLUYE VARIADOR)	INST.ELEC.CONVERTISSEUR MOTEUR TAMBOUR 6 (COMPRIS VARIATEUR)
40	546671	ELECT. INST. X5	INST. ELEC. X5	INST. ELEC. X5

info@zipnasklade.ru
8(800)500-69-51

Nº	REF	DENOMINATION	DENOMINACIÓN	DENOMINATION
41	332262	CASTING MGS-2-01 (L= 240 MM)	MOLDURA MGS-2-01 (L= 240 MM)	MOULE MGS-2-01 (L= 240 MM)
42	10045185	ELECTRIC HARNESS 4-6	CABLEADO ELECTRICO 4-6	CABLAGE ELECTRIQUE 4-6
43	10035103	BURNER INST. ELEC. 4-6 (FOR MACHINES GAS HEATING)	INST. ELEC. QUEMADOR 4-6 (PARA MODELOS CALEFACCION GAS)	BRULEUR INST. ELEC. 4-6 (POUR MACHINES CHAUF.GAZ)
44	557611	AIR PRESSURE SWITCH (SETTING: 80PA)*	PRESOSTATO PARA AIRE (TARAJE: 80PA)*	PRESSOSTAT AIR (REGLAJE: 80PA)*
45	145631	INOX FLAT SCREW DIN85 A2-70 M4X16	TOR.PLA.DIN85 INOX A2-70 M4X16	VIS PLAT INOX DIN85 A2-70 M4X16
46	193862	NTC RESISTANCE	RESISTENCIA NTC	RESISTANCE NTC
47	256149	SENSOR SHEATH LODGING	PASAMUROS SENSOR	LOGEMENT SENSEUR
48	546721	THERMOSTAT 36TXE21 100ºC 6.3x0,8(45/90)	TERMOSTATO 36TXE21 100ºC 6.3x0,8(45/90)	THERMOSTAT36TXE21 100ºC 6.3x0,8(45/90)
49	553073	PRESSURE SWITCH HOSE	TUBO PRESOSTATO	TUBE PRESSOSTAT
50	336081	PRESSURE SWITCH INTAKE	TOMA PRESOSTATO	PRISE PRESSOSTAT
51	553800	IGNITION ELECTRODE WIRE DUCT (FOR MACHINES GAS HEATING)	CANAL CABLE ELECTRODOS ENCENDIDO (PARA MODELOS CALEFACCION GAS)	CONDUIT CABLE ELECTRODE ALLUMAGE (POUR MACHINES CHAUF.GAZ)
52	553172	SILICONE INSULATION HOSE (FOR MACHINES GAS HEATING)	TUBO AISLANTE SILICONA (PARA MODELOS CALEFACCION GAS)	TUBE ISOLANT SILICONE (POUR MACHINES CHAUF.GAZ)
53	321182	FERRITE SPLIT GRFC-13	FERRITA SPLIT GRFC-13	FERRITE SPLIT GRFC-13
54	326132	CABLE TIE Ø35 NATURAL	ABRAZADERA Ø35 NATURAL	BRIDE Ø35 NATUREL
55	558031	SUPPLY WIRE DUCT	CANAL CABLES ALIMENTACION	CONDUIT CABLES ALIMENTATION
56	559880	SCREW FT85T 3X6	TORNILLO FT85T 3X6 (ESPECIAL)	VIS FT85T 3X6
57	10003945	GND WIRE	CABLE TIERRA	CABLE DE TERRE
58	10003978	GND WIRE	CABLE TIERRA	CABLE DE TERRE
59	10003986	GND WIRE	CABLE TIERRA	CABLE DE TERRE

info@zipnasklade.ru
8(800)500-69-51

From machine Nr. 2.290.001
To machine Nr. 2.291.539

ED660 9

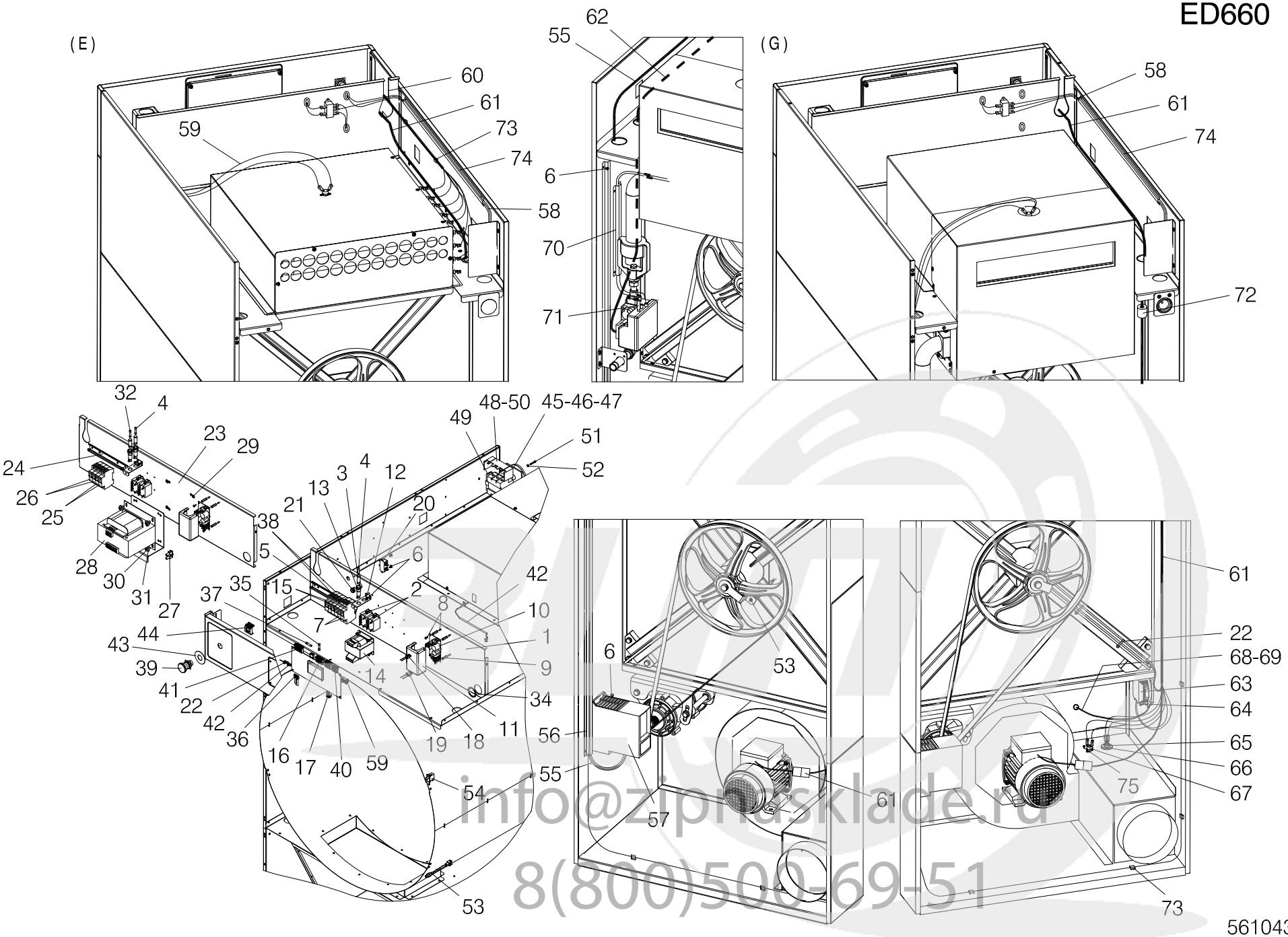

info@ziprasklade.ru
8(800)500-69-51

561043_09

Nº	REF	DENOMINATION	DENOMINACIÓN	DENOMINATION
		FROM MACHINE Nr: 2.290.001 TO MACHINE No : 2.291.539	A PARTIR DE LA MAQUINA No : 2.290.001 HASTA LA MAQUINA No: 2.291.539	A PARTIR DE LA MACHINE NR: 2.290.001 JUSQU'A LA MACHINE No : 2.291.539
1	541649	ELECTRIC CONTROL DIVIDER (FOR 200V-208V-220V-230V-240V) (FOR 380V-400V-415V)	SEPARADOR CUADRO ELECTRICO (PARA 200V-208V-220V-230V-240V) (PARA 380V-400V-415V)	SEPARATEUR PANNEAU ELEC. (POUR 200V-208V-220V-230V-240V) (POUR 380V-400V-415V)
2	322701	RELAY 12VDC	RELE 12VDC*	RELAIS 12VDC
3	137661	BAYONET HEAD	CABEZA BAYONETA FEK.031.1613	TETE BAYONETTE
4	326371	FUSE FST 8A	CART.FUSIB.FST 0034.5244 8 A*	CARTOUCHE FUSIBLE FST 8A
5	245571	CONTACTOR FIXING PROFILE	PERFIL FIJACION CONTACTORES	PROFILE FIXATION CONTACTEURS
6	183400	PLATE SCREW ST-4, 20 P.F. C/AL.T25	TORNILLO CHAPA ST-4 (ESPECIAL)*	VIS PLAQUE ST-4, 20 P.F. C/AL.T25
7	544411	AUTOMATIC SWITCH 0,5A (FOR 200V-208V-220V-230V-240V) (FOR 380V-400V-415V)	INTERRUPTOR AUT. 0,5A CURVA D* (PARA 200V-208V-220V-230V-240V) (PARA 380V-400V-415V)	INTERRUPTEUR AUT.0,5A (POUR 200V-208V-220V-230V-240V) (POUR 380V-400V-415V)
8	322693	SCREW PT KN35X10 WN1412	TORNILLO PT KN35X10 WN1412 (ESPECIAL)	VIS PT KN35X10 WN1412
9	322685	SEPARATOR HEX.HS6-8	SEPARADOR EXAGONAL HS6-8	SEPARATEUR HEX. HS6-8
10	332718	POWER SOURCE MW PS-25-12	FUENTE ALIMENT.MW PS-25-12	FONT ALIMENT.MW PS-25-12
11	326843	MICROPROCESSOR PLATE COVER	TAPA PLACA MICROPROCESADOR	COUVERCLE PLAQUE MICROPROSSEUR
12	542654	FUSE BRACKET	SOPORTE FUSIBLES	SUPPORT FUSIBLES
13	160119	FUSE HOLDER REF.FEC 031 1631	PORTAFUSIBLES REF.FEC.031.1631	PORTE-FUSIBLE REF.FEC 031 1631
14	540286	TRANSFORMER 100VA 2X115V_2 *	TRANSFORMADOR 100VA 2X115V_2 *	TRANSFORMATEUR 100VA 2X115V_2 *
15	518191	AUTOMATIC SWITCH 4A	INTERRUPTOR AUT. 4A CURVA D*	INTERRUPTEUR AUT. 4A
16	546655	ELECT. INST. X11	INST. ELEC. X11	INST. ELEC. X11
17	546630	ELEC. INST. X1	INST. ELEC. X1	INST. ELEC. X1
18	546556	PLUG ELEC.INST. X14	INS. ELEC. CONECTORA X14	INST.ELEC. CONNECTEUR X14
19	533273	PLUG ELEC.INST. X9	INST.ELEC.CONECTORA X9	INST.ELEC. CONNECTEUR X9
20	557975	FILTER FRI FA-3Z	FILTRO DE RED RFI TIPO FA-3Z	FILTRE RFI FA-3Z
21	332601	SHEATH-LODGING DGB-7	PASAMUROS DGB-7	LOGEMENT DGB-7
22	140434	CLAMP 2221	BRIDA UNEX 2221 *	BRIDE 2221

info@zipnasklade.ru
8(800)500-69-51

Nº	REF	DENOMINATION	DENOMINACIÓN	DENOMINATION
23	553354	ELECTRIC CONTROL DIVIDER (FOR (440÷480)V) (FOR MACHINES GAS HEATING) (FOR 380V-400V-415V) (WITHOUT NEUTRAL)	SEPARADOR CUADRO ELECTRICO (PARA (440÷480)V) (PARA MODELOS CALEFACCION GAS) (PARA 380V-400V-415V) (SIN NEUTRO)	SEPARATEUR PANNEAU ELEC. (POUR (440÷480)V) (POUR MACHINES CHAUF.GAZ) (POUR 380V-400V-415V) (SANS NEUTRE)
24	214908	CONTACTORS FIXING PROFILE (FOR (440÷480)V) (FOR MACHINES GAS HEATING) (FOR 380V-400V-415V) (WITHOUT NEUTRAL)	PERFIL FIJACION CONTACTORES (PARA (440÷480)V) (PARA MODELOS CALEFACCION GAS) (PARA 380V-400V-415V) (SIN NEUTRO)	PROFILE FIXATION CONTACTEURS (POUR (440÷480)V) (POUR MACHINES CHAUF.GAZ) (POUR 380V-400V-415V) (SANS NEUTRE)
25	518209	AUTOMATIC SWITCH 6A (FOR (440÷480)V) (FOR MACHINES GAS HEATING) (FOR 380V-400V-415V) (WITHOUT NEUTRAL)	INTERRUPTOR AUT.6A CURVA D* (PARA (440÷480)V) (PARA MODELOS CALEFACCION GAS) (PARA 380V-400V-415V) (SIN NEUTRO)	INTERRUPTEUR AUT.6A (POUR (440÷480)V) (POUR MACHINES CHAUF.GAZ) (POUR 380V-400V-415V) (SANS NEUTRE)
26	544403	AUTOMATIC SWITCH 3A (FOR (440÷480)V) (FOR MACHINES GAS HEATING) (FOR 380V-400V-415V) (WITHOUT NEUTRAL)	INTERRUPTOR AUT. 3A CURVA D* (PARA (440÷480)V) (PARA MODELOS CALEFACCION GAS) (PARA 380V-400V-415V) (SIN NEUTRO)	INTERRUPTEUR AUT.3A (POUR (440÷480)V) (POUR MACHINES CHAUF.GAZ) (POUR 380V-400V-415V) (SANS NEUTRE)
27	135459	CONNECTION BOARD 34223	REGLETA LEGRAND 34276(12 ELEM)	REGLETTE 34223 (12 ELEMENTS)
28	549378	TRANSFORMER 1.6kVA 2X115V * (FOR (440÷480)V) (FOR MACHINES GAS HEATING) (FOR 380V-400V-415V) (WITHOUT NEUTRAL)	TRANSFORMADOR 1.6KVA 2X115V * (PARA (440÷480)V) (PARA MODELOS CALEFACCION GAS) (PARA 380V-400V-415V) (SIN NEUTRO)	TRANSFORMATEUR 1.6kVA 2X115V * (POUR (440÷480)V) (POUR MACHINES CHAUF.GAZ) (POUR 380V-400V-415V) (SANS NEUTRE)
29	128934	CYLINDRICAL CAGED NUT M-6	TUER.ENJ.M6 CILINDR.R-310078-1	ECROU ENCAGE CYLINDRIQUE M-6
30	144337	ALLEN SCREW DIN912 M 6X15	TOR.ALLDIN912-8.8 B.TRI.M 6X15	VIS ALLEN DIN912 M 6X15
31	153205	WASHER 20X7X2	ARANDELA 20X7X2 TRIVALEN.	RONDELLE 20X7X2
32	321125	FUSE SPT 1 A (FOR (440÷480)V) (FOR MACHINES GAS HEATING) (FOR 380V-400V-415V) (WITHOUT NEUTRAL)	CART.FUSIB.SPT 0001.2524 1 A* (PARA (440÷480)V) (PARA MODELOS CALEFACCION GAS) (PARA 380V-400V-415V) (SIN NEUTRO)	CARTOUCHE FUS. SPT 1 A (POUR (440÷480)V) (POUR MACHINES CHAUF.GAZ) (POUR 380V-400V-415V) (SANS NEUTRE)
33	553347	TRANSFORMER BRACKET (FOR (440÷480)V) (FOR MACHINES GAS HEATING) (FOR 380V-400V-415V) (WITHOUT NEUTRAL)	SOPORTE TRANSFORMADOR (PARA (440÷480)V) (PARA MODELOS CALEFACCION GAS) (PARA 380V-400V-415V) (SIN NEUTRO)	SUPPORT TRANSFORMATEUR (POUR (440÷480)V) (POUR MACHINES CHAUF.GAZ) (POUR 380V-400V-415V) (SANS NEUTRE)
34	552596	CASTING MGS 2X110	MOLDURA MGS 2X110	MOULE MGS 2X110
35	302612	FUSE FST 0034.3117 1A	CART.FUSIB.FST 0034.3117 1A	CART.FUSIBLE FST 0034.3117 1A

info@zipnasklad.ru
8(800)500-69-51

Nº	REF	DENOMINATION	DENOMINACIÓN	DENOMINATION
36	530519	IDENTIFICATION PLUG	CONECTORA IDENTIFICACION	CONNECTEUR IDENTIFICATION
37	321125	FUSE SPT 1 A	CART.FUSIB.SPT 0001.2524 1 A*	CARTOUCHE FUS. SPT 1 A
38	518191	AUTOMATIC SWITCH 4A (FOR 200V-208V-220V-230V-240V) (FOR 380V-400V-415V) (FOR MACHINES ELECTR.HEATING)	INTERRUPTOR AUT. 4A CURVA D* (PARA 200V-208V-220V-230V-240V) (PARA 380V-400V-415V) (PARA MODELOS CALEFAC.ELECTR.)	INTERRUPTEUR AUT. 4A (POUR 200V-208V-220V-230V-240V) (POUR 380V-400V-415V) (POUR MACHINES CHAUF.ELECTR.)
39	341479	MUSHROOM PUSH BUTTON A223-M (FOR SMART CONTROL MODELS)	PUL.HONGO ENCL.A22E-M (PARA MODELOS CON SMART CONTROL)	PULSATEUR TYPE COUPE DE POING A22E-M (POUR MODELES AVEC SMART CONTROL)
40	546606	EMERGENCY STOP PLUG (FOR SMART CONTROL MODELS)	CONECTORA PARO EMERGENCIA (PARA MODELOS CON SMART CONTROL)	CONNECTEUR ARRET D'URGENCE (POUR MODELES AVEC SMART CONTROL)
	546663	EMERGENCY STOP PLUG (COIN CTRL MODELS ONLY)	CONECTORA PARO EMERGENCIA (PARA MODELOS A COIN CONTROL)	CONNECTEUR ARRET D'URGENCE (POUR MODELE COIN CONTROL)
41	546648	DOOR ELEC. INST. 4-6	INST. ELECT. PUERTAS 4-6	INST. ELEC. PORTES 4-6
42	546689	INLET TEMPERATURE PROBE ELEC.INST.	INST. ELEC. SONDA TEMPERATURA ENTRADA	INST.ELEC. SONDE TEMPERATURE ENTREE
43	192294	YELLOW RING (FOR SMART CONTROL MODELS)	ARO AMARILLO (PARA MODELOS CON SMART CONTROL)	BAGUE JAUNE (POUR MODELES AVEC SMART CONTROL)
44	341503	CONNECTION BRACKET A22-3200 (FOR SMART CONTROL MODELS)	SOPORTE CONEXION A22-3200 (PARA MODELOS CON SMART CONTROL)	SUPPORT CONNEXION A22-3200 (POUR MODELES AVEC SMART CONTROL)
45	198861	GRAL.SWITCH P1-25/V/SVB (FOR MACHINES GAS HEATING)	INTERRUPT.GENERAL P1-25/V/SVB (PARA MODELOS CALEFACCION GAS)	INTERRUPTEUR GRAL.P1-25/V/SVB (POUR MACHINES CHAUF.GAZ)
46	300384	PAQUET.SWITCH P3-63/V/SVB (FOR 380V-400V-415V) (FOR MACHINES ELECTR.HEATING)	INTERRUPT.GENERAL P3-63/V/SVB* (PARA 380V-400V-415V) (PARA MODELOS CALEFAC.ELECTR.)	INTERRUPTEUR PAQUET.P3-63/V/SVB (POUR 380V-400V-415V) (POUR MACHINES CHAUF.ELECTR.)
47	300392	PAQUET.SWITCH P3-100/V/SVB (FOR 200V-208V-220V-230V-240V) (FOR MACHINES ELECTR.HEATING)	INTERRUPT.GENERAL P3-100/V/SVB* (PARA 200V-208V-220V-230V-240V) (PARA MODELOS CALEFAC.ELECTR.)	INTERRUP.PAQUET P3-100/V/SVB (POUR 200V-208V-220V-230V-240V) (POUR MACHINES CHAUF.ELECTR.)
48	302828	ACCESSOR.H-P3 (FOR MACHINES ELECTR.HEATING)	CUBREBORNES H-P3 MOELLER (PARA MODELOS CALEFAC.ELECTR.)	ACCESOR.H-P3 (POUR MACHINES CHAUF.ELECTR.)
49	198879	SECTION.NEUTRE N-P1Z (FOR 380V-400V-415V) (FOR MACHINES ELECTR.HEATING)	NEUTRO SECCIONABLE N-P1Z (PARA 380V-400V-415V) (PARA MODELOS CALEFAC.ELECTR.)	NEUTRE SECCON.N-P1Z (POUR 380V-400V-415V) (POUR MACHINES CHAUF.ELECTR.)
50	553826	ACCESSOR.H-P1 (FOR MACHINES GAS HEATING)	CUBREBORNES H-P1 MOELLER (PARA MODELOS CALEFACCION GAS)	ACCESOR.H-P1 (POUR MACHINES CHAUF.GAZ)
51	146183	BICR CYL SCREW DIN 84 M-4X25	TOR.CIL.DIN84-4.8 B.TRI.M 4X25	VIS CYL BICR DIN 84 M-4X25
52	132043	SELF-LOCKING NUT DIN985-8 B.TRI.M 4	TUER.AUTOBL.DIN985-8 B.TRI.M 4	ECROU AUTOBLOCANT DIN985-8 B.TRI.M 4
53	546697	TUMBLER ROTATION AND DOOR DETECTOR	DETECTOR PUERTA Y GIRO TAMBOR	DETECTEUR PORTE ET ROTATION TAMBOUR
54	543959	MINISWITCH CHERRY E69-83C	MINIRRUPTOR CHERRY E69-83C *	MINIRRUPTEUR CHERRY E69-83C

info@zipnasklade.ru
8(800)500-69-51

Nº	REF	DENOMINATION	DENOMINACIÓN	DENOMINATION
55	546523	INVERTER ELEC. INST. 4-6	INS. ELEC. VARIADOR 4-6	INST. ELEC. CONVERTISSEUR 4-6
56	553032	INVERTER WIRE DUCT	CANAL CABLE CONVERTIDOR	CONDUIT CABLE CONVERTISSEUR
57	535849	FREQ.INVERTER VLT FC-051 0.75kW	VARIADOR VLT FC-051 0.75kW *	VARIATEUR FREQ. VLT FC-051 0.75kW
58	546564	TUMBLER MOTOR INVERTER ELEC.INST. 6 (INVERTER INCLUDED)	INS. ELEC. VARIADOR MOTOR TAMBOR 6 (INCLUYE VARIADOR)	INST.ELEC.CONVERTISSEUR MOTEUR TAMBOUR 6 (COMPRIS VARIATEUR)
59	546671	ELECT. INST. X5 (FOR MACHINES ELECTR.HEATING)	INST. ELEC. X5 (PARA MODELOS CALEFAC.ELECTR.)	INST. ELEC. X5 (POUR MACHINES CHAUF.ELECTR.)
60	332262	CASTING MGS-2-01 (L= 240 MM)	MOLDURA MGS-2-01 (L= 240 MM)	MOULE MGS-2-01 (L= 240 MM)
61	546481	ELECTRIC HARNESS 4-6	CABLEADO ELECTRICO 4-6	CABLAGE ELECTRIQUE 4-6
62	546598	BURNER INST. ELEC. 4-6 (FOR MACHINES GAS HEATING)	INST. ELEC. QUEMADOR 4-6 (PARA MODELOS CALEFACCION GAS)	BRULEUR INST. ELEC. 4-6 (POUR MACHINES CHAUF.GAZ)
63	557611	AIR PRESSURE SWITCH (SETTING: 80PA)*	PRESOSTATO PARA AIRE (TARAJE: 80PA)*	PRESSOSTAT AIR (REGLAJE: 80PA)*
64	145631	INOX FLAT SCREW DIN85 A2-70 M4X16	TOR.PLA.DIN85 INOX A2-70 M4X16	VIS PLAT INOX DIN85 A2-70 M4X16
65	193862	NTC RESISTANCE	RESISTENCIA NTC	RESISTANCE NTC
66	256149	SENSOR SHEATH LODGING	PASAMUROS SENSOR	LOGEMENT SENSEUR
67	546721	THERMOSTAT 36TXE21 100ºC 6.3x0,8(45/90)	TERMOSTATO 36TXE21 100ºC 6.3x0,8(45/90)	THERMOSTAT36TXE21 100ºC 6.3x0,8(45/90)
68	553073	PRESSURE SWITCH HOSE	TUBO PRESOSTATO	TUBE PRESSOSTAT
69	336081	PRESSURE SWITCH INTAKE	TOMA PRESOSTATO	PRISE PRESSOSTAT
70	553800	IGNITION ELECTRODE WIRE DUCT (FOR MACHINES GAS HEATING)	CANAL CABLE ELECTRODOS ENCENDIDO (PARA MODELOS CALEFACCION GAS)	CONDUIT CABLE ELECTRODE ALLUMAGE (POUR MACHINES CHAUF.GAZ)
71	553172	SILICONE INSULATION HOSE (FOR MACHINES GAS HEATING)	TUBO AISLANTE SILICONA (PARA MODELOS CALEFACCION GAS)	TUBE ISOLANT SILICONE (POUR MACHINES CHAUF.GAZ)
72	321182	FERRITE SPLIT GRFC-13	FERRITA SPLIT GRFC-13	FERRITE SPLIT GRFC-13
73	326132	CABLE TIE Ø35 NATURAL	ABRAZADERA Ø35 NATURAL	BRIDE Ø35 NATUREL
74	558031	SUPPLY WIRE DUCT	CANAL CABLES ALIMENTACION	CONDUIT CABLES ALIMENTATION
75	559880	SCREW FT85T 3X6	TORNILLO FT85T 3X6 (ESPECIAL)	VIS FT85T 3X6

info@zipnasklade.ru
8(800)500-69-51

ED660 V
ED460 V
Pag.10

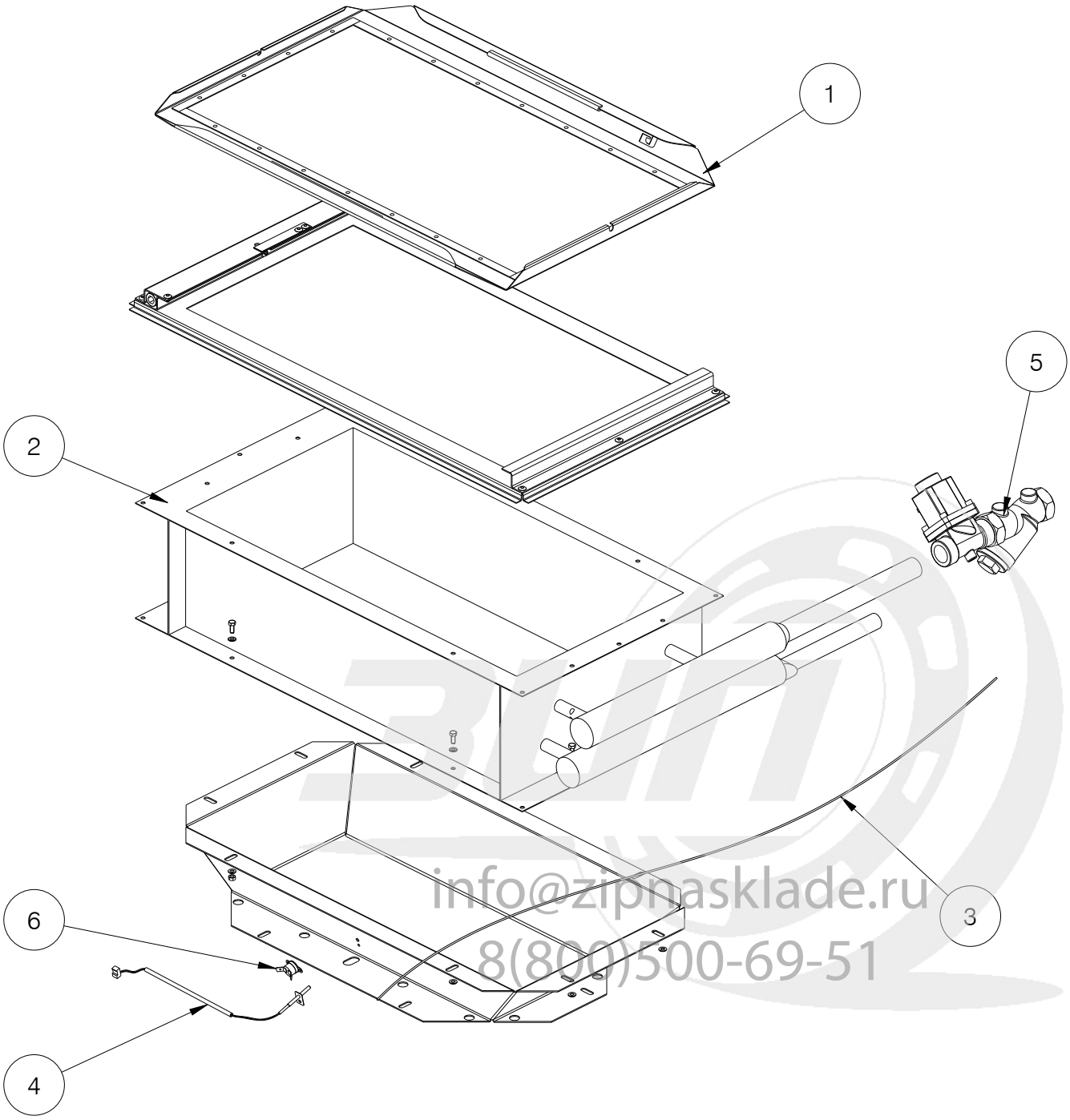

info@zipnasklade.ru
8(800)500-69-51

Nº	REF	DENOMINATION	DENOMINACIÓN	DENOMINATION
1	596684	HIGHER COVER SET	CONJUNTO SOLDADURA FILTRO AIRE	ENSEMBLE COUVERCLE SUPERIEUR
2	596742	STEAM EXCHANGER ED460/660	INTERCAMBIADOR VAPOR ED460/660	ECHANGEUR DE VAPEUR ED460/660
3	598714	HEATING ELC.INST.	INST. CABLE ELECTROVALVULA VAPOR	INST.ELEC. CHAUFFAGE
4	546689	INLET TEMPERATURE PROBE ELEC.INST.	INST. ELEC. SONDA TEMPERATURA ENTRADA	INST.ELEC. SONDE TEMPERATURE ENTREE
5	583419	STEAM GROUP ENTRY 3/4"	GRUPO ENTRADA VAPOR 3/4"	GROUPE ENTREE VAPEUR 3/4"
6	546713	THERMOSTAT 36TXE21 180ºC (180ºC)	TERMOSTATO 36TXHE21 22541 (180ºC)	THERMOSTAT 36TXE21 (180ºC)

info@zipnasklade.ru
8(800)500-69-51

info@zipnasklade.ru
8(800)500-69-51

Nº	REF	DENOMINATION	DENOMINACIÓN	DENOMINATION
1	10243996	ALLWET LABEL	ETIQUETA ALLWET	ÉTIQUETTE ALLWET
2	10111862	CAPACITY LABEL ED660	ETIQUETA CAPACIDAD ED660	ÉTIQUETTE CAPACITÉ ED660
3	555920	ETIQUETA MOD. MS-613	ETIQUETA PRESTACIONES	ETIQUETA MOD. MS-613
4	10046043	LABEL AQUATOUCH	ETIQUETA AQUATOUCH	ÉTIQUETTE AQUATOUCH
5	555946	ETIQUETA MOD. MS-613	ETIQUETA ESCOTILLA	ETIQUETA MOD. MS-613
6	555912	LABEL MOD. ED660	ETIQUETA MOD. ED660	ETIQUETTE MOD. ED660

info@zipnasklade.ru
8(800)500-69-51