PROFESSIONAL WASHER EXTRACTOR

6,5kg

VERSION WITH DRAINAGE PUMP

info@zipnasklade.ru
8(800)500-69-51

SPARE PARTS MANUAL

540803
Publication date: 27 Oct 2010

info@zipnasklade.ru
8(800)500-69-51

pump (400 V) BE

Outer casing

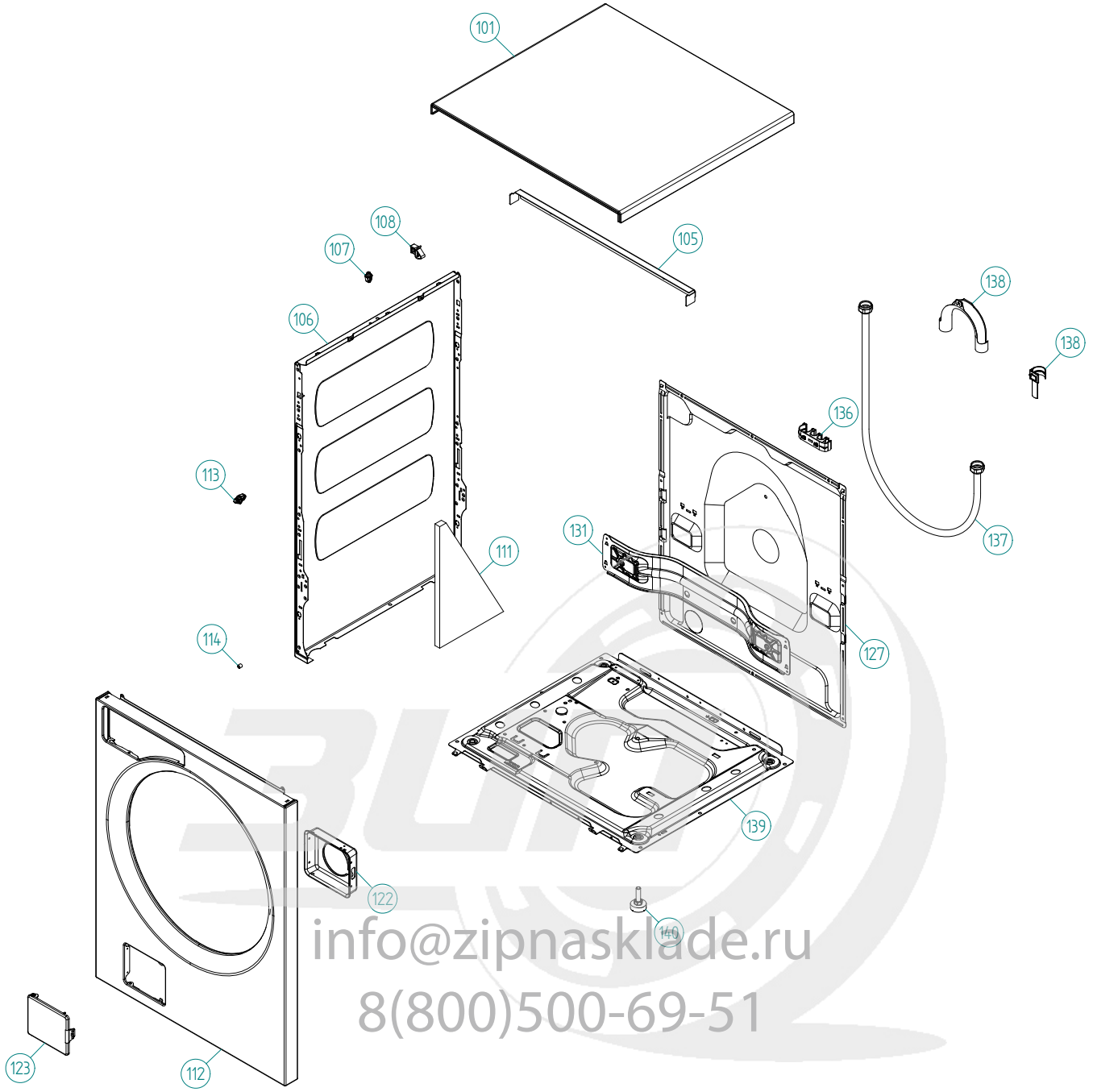

info@zipnasklade.ru
8(800)500-69-51

pump (400 V) BE - Titanium FI (WM70.C)

Pos	Spare Part No.	Description	Qty	Comment
101	8061817-81	TOP COVER GREY METALLIC	1 Pc's	
101-a	8900338	SCREW Repl.by 8902362	3 Pc's	
101-b	8901413	LOCK WASHER AZ 4,3 GALV	2 Pc's	
105	8064198	SUPPORT BEAM, TOP COVER	1 Pc's	
105-a	8064255	SPONGE RUBBER STRIP 2X8 L=272	1 Pc's	
106	8801174-81	SIDE PLATE COMPL. WM20	2 Pc's	
107	8061763	GUIDE FRONT PLATE/TOP COVER	2 Pc's	
108	8061916	CABLE HOLDER WMD20 UL4	1 Pc's	
111	8064017	SOUND DEAD.SHEET OUTLET HOSE	1 Pc's	
112	8080117-81	FRONT WITHOUT DOOR COMPL.	1 Pc's	
113	8080197	PLASTIC BRACKET FRONT PLATE	2 Pc's	
114	8064222	PLASTIC GUIDE FRONT PLATE	2 Pc's	
114-a	8900327	SCREW RTS ST 4,2X13 FZB T20	2 Pc's	
122	8061785	PUMP GUARD WM20	1 Pc's	
123	8061657-81	DOOR OUTLET PUMP GREY METALLIC	1 Pc's	
127	8061737	REAR PANEL WM20	1 Pc's	
127-b	8900338	SCREW Repl.by 8902362	11 Pc's	
131	8088291	BEAM TRANSPORT BRACE WM70	1 Pc's	
134	8088277	SCREW M10X65 TT FZB	1 Pc's	
135	8088467	PLUG TRANSPORT LOCKING	1 Pc's	
136	8065773	HOSE FRAME REAR COVER	2 Pc's	
137	8076070	CONNECT. PIPE 3/4"-3/4" BLACK	2 Pc's	
138	8050805	HOLDER, HOSE UL4	1 Pc's	
138	8088270	HOSE HOLDER SIDEPLATE	2 Pc's	
138-a	8002263	CABLE STRIP 200 MM	1 Pc's	
139	8061618	BOTTOM WMD20	1 Pc's	
140	8059334	RUBBER FOOT D35xM10 INC. NUT	4 Pc's	

info@zipnasklade.ru
8(800)500-69-51

pump (400 V) BE

Upper session

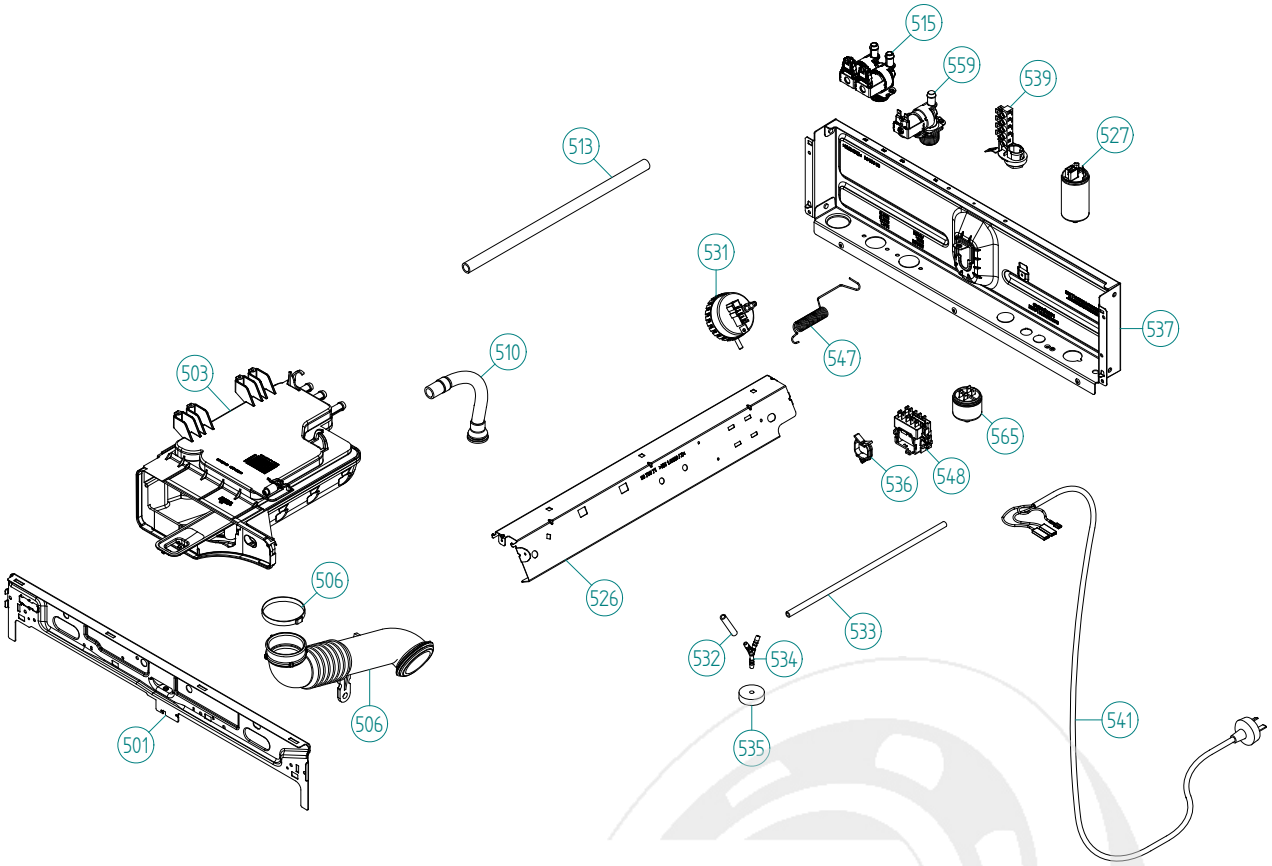

info@zipnasklade.ru
8(800)500-69-51

pump (400 V) BE - Titanium FI (WM70.C)

Pos	Spare Part No.	Description	Qty	Comment
501	8076029	FRONTBEAM	1 Pc's	
501-a	8900338	SCREW Repl.by 8902362	2 Pc's	
501-b	8901413	LOCK WASHER AZ 4,3 GALV	2 Pc's	
503	8081666	DETERGENT COMPARTMENT COMPL.	1 Pc's	
503-a	8901970	SCREW PTK 40X12 A2 WN1452 T20	1 Pc's	
503-b	8902072	SCREW PT KB40X10 WN1442 GALV	1 Pc's	
506	8064692	BELLOW HOSE INLET UL4	1 Pc's	
506-a	8063607	HOSE CLIP 57,5	1 Pc's	
510	8061736	VENTILATION HOSE WM20 UL4	1 Pc's	
510-a	8052730	HOSE CLIP 21,0	1 Pc's	
513	8076363	WRAS RUBBER HOSE 350mm	2 Pc's	
515	8083880	INLET VALVE 2-WAY	1 Pc's	
515-a	8901097	SCREW MRT-TT 4X10 FZB T20	2 Pc's	
526	8078971	UNIT FOR ELECTR. COMP.	1 Pc's	
527	8076202	EMC-FILTER WITH INDUCTOR	1 Pc's	
527-a	8901155	NUT M6M8 BH8 GALV	1 Pc's	
527-b	8901419	LOCK WASHER AZ 8,4 GALV	1 Pc's	
529	8079714	CABLE SET MC C CIM-A W UL4	1 Pc's	
529	8082568	CABLE SET P WM UL4	1 Pc's	
529	8082569	CABLE SET MC P WM UL4	1 Pc's	
529	8083063	CABLE SET IV3 WM60.C UL4	1 Pc's	
529	8079710	CABLE SET IV WM UL4	1 Pc's	
529	8079716	CABLE SET N AP LL WM UL4	1 Pc's	
529	8083057	CABLE SET EL WM60.C UL4	1 Pc's	
529	8089033	CABLE SET MOTOR A WM UL4	1 Pc's	
531	8089766	LEVEL SWITCH WM70	1 Pc's	
532	8080832	RUBBER HOSE 5X8X75	1 Pc's	
533	8080617	RUBBER HOSE 5X8X260	1 Pc's	
534	8051843	Y-PIPE 05	1 Pc's	
535	8061997	GUARD, LEVELSWITCH HOSE WM20	2 Pc's	
536	8061975	CABLE HOLDER BIG	1 Pc's	
537	8089748	CROSS BEAM	1 Pc's	
537-a	8900327	SCREW RTS ST 4,2X13 FZB T20	5 Pc's	
539	8061660	TERMINAL BLOCK 5-POLE	1 Pc's	
539-a	8901097	SCREW MRT-TT 4X10 FZB T20	1 Pc's	
541	8078983	MAINS CABLE 5X1.5X2000 90C	1 Pc's	
547	8089723	BALANCING SPRING	2 Pc's	
548	8064179	CONTACTOR 4S 50/60HZ	1 Pc's	
559	8083315	INLET VALVE 1-WAY	1 Pc's	
565	8058559	RADIOINTERF.SUPP. FILTER F19	2 Pc's	
565-a	8901155	NUT M6M8 BH8 GALV	1 Pc's	
565-b	8901419	LOCK WASHER AZ 8,4 GALV	1 Pc's	

info@zipnasklade.ru
8(800)500-69-51

pump (400 V) BE

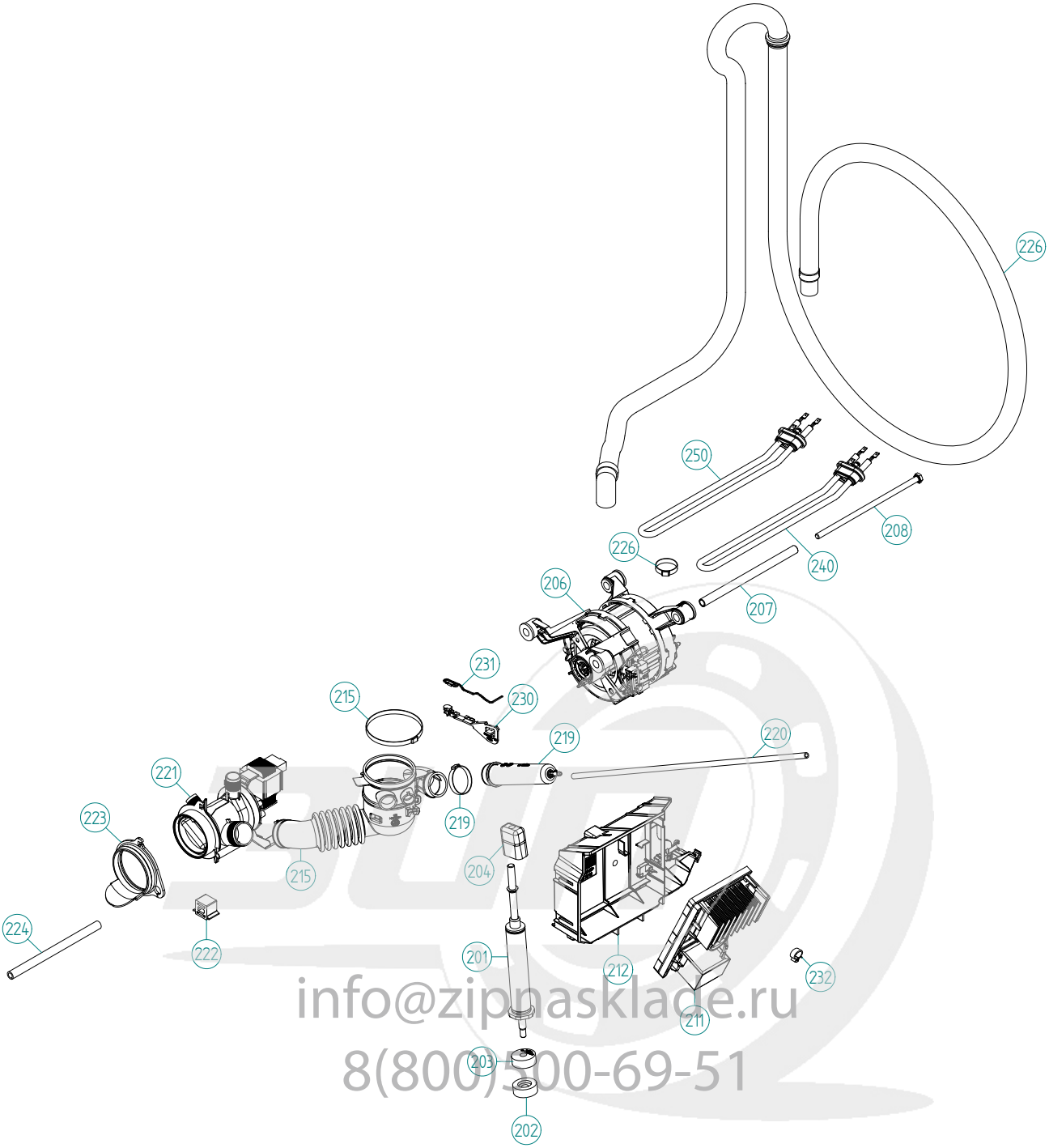

info@zipnasklade.ru
8(800)500-69-51

pump (400 V) BE - Titanium FI (WM70.C)

Pos	Spare Part No.	Description	Qty	Comment
201	8801454	SPRINGLEG KIT WM70	1 Pc's	
202	8088443	RUBBER BUFFER SPRING LEG	4 Pc's	
203	8088444	RUBBER BUFFER SPRING LEG	4 Pc's	
204	8088445	RUBBER DAMPER PISTON ROD	4 Pc's	
206	8088644	MOTOR CIM WM70	1 Pc's	
207	8058261	SPAC.TUBE MOTOR SUSP. 12X191	2 Pc's	
208	8063591	SCREW 8.8 M8x205 FZB	2 Pc's	
211	8089672	MOTOR CONTROL UNIT CIM-A	1 Pc's	
211-a	8901097	SCREW MRT-TT 4X10 FZB T20	1 Pc's	
211-b	8901322	WASHER SRB 4,3X12X1 GALV.	1 Pc's	
212	8083420	HOLDER CONTROL UNIT(MOTOR) UL4	1 Pc's	
215	8076733	BELLOWS HOSE PUMP VAR.1 UL4	1 Pc's	
215	8801292	BELLOWS HOSE WITH BALL/WASHER	1 Pc's	
215-a	8063262	HOSE CLIP 80.0-708	1 Pc's	
215-b	8056471	HOSE CLIP 42,5	1 Pc's	
215-c	8052083	HOSE CLIP Repl.by 8084609	1 Pc's	
219	8061924	PRESSURE CHAMBER WM20 UL4	1 Pc's	
219-c	8052083	HOSE CLIP Repl.by 8084609	1 Pc's	
220	8080831	RUBBER HOSE 5X8X520	1 Pc's	
221	8801263	DRAIN PUMP COMPL. SYNCR. 50HZ	1 Pc's	
221-a	8801186	SEAL PUMP INSERT HANNING SYNC.	1 Pc's	
221-b	8801185	PUMP INSERT HANNING SYNC. WM20	1 Pc's	
222	8061649	RUBBER BUFFER,DRAIN PUMP WM20	2 Pc's	
223	8061796	RUBBER RING DRAINPUMP WM20	1 Pc's	
224	8061725	DRAIN HOSE 190mm WM20	1 Pc's	
224-a	8052731	HOSE CLIP 14,8	1 Pc's	
226	8061998	OUTLET HOSE WM20 UL4	1 Pc's	
226-a	8056491	HOSE CLIP 30,1	1 Pc's	
230	8061738	HOLDER THERMISTOR WM20	1 Pc's	
231	8076102	THERMISTOR WM	1 Pc's	
232	8061976	CABLE HOLDER SMALL	2 Pc's	
240	8061703	HEATINGEL. 2000W 230V FUSE UL4	1 Pc's	
250	8061704	HEATINGEL. 1000W 230V FUSE UL4	1 Pc's	

info@zipnasklade.ru
8(800)500-69-51

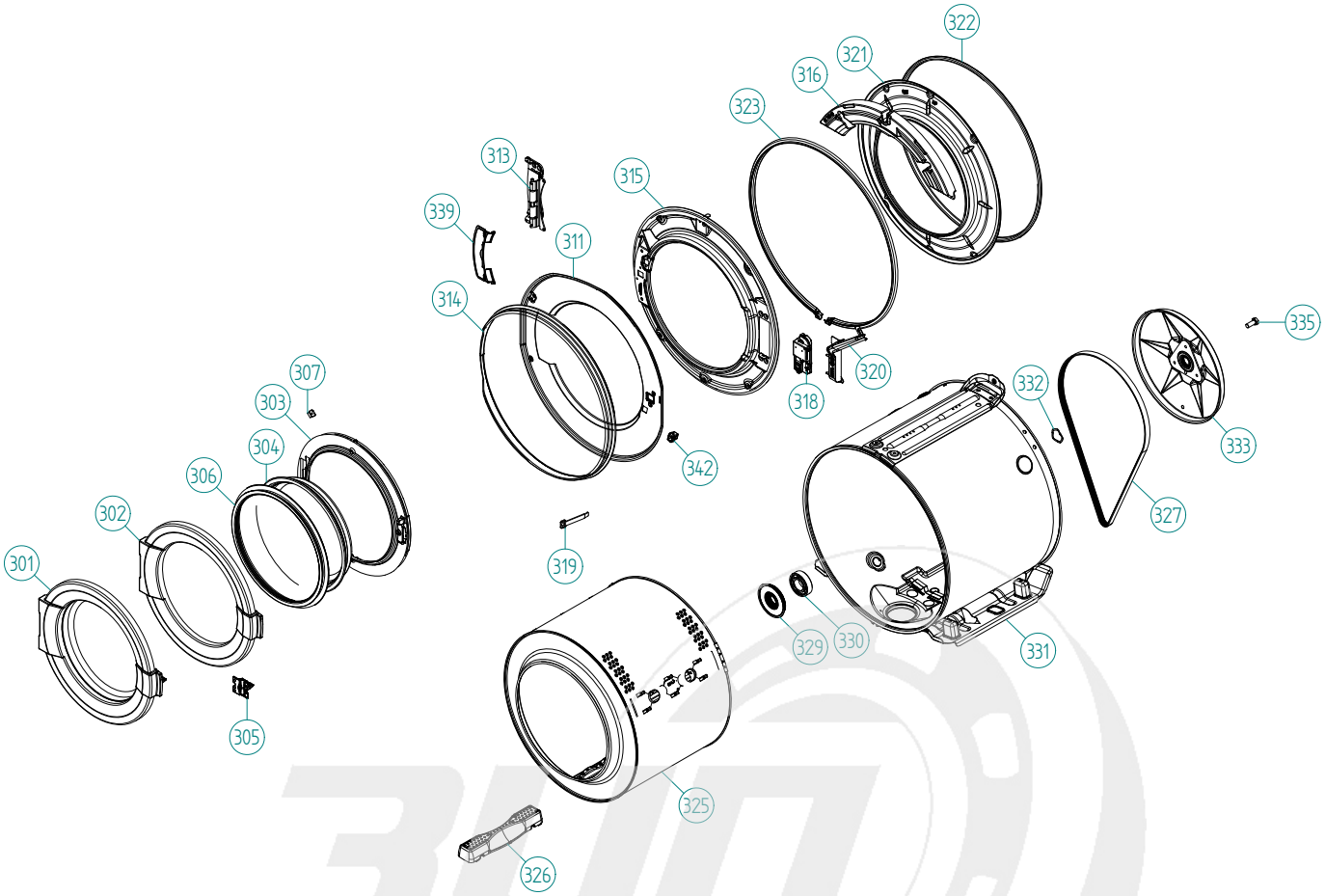

info@zipnasklade.ru
8(800)500-69-51

pump (400 V) BE - Titanium FI (WM70.C)

Pos	Spare Part No.	Description	Qty	Comment
301	8082933-81	FRONT DOOR COMPL. WM60.C	1 Pc's	
302	8082934-81	FRAME FRONT DOOR OUTER PART	1 Pc's	
303	8082937-49	FRAME FRONT DOOR INNER PART	1 Pc's	
304	8061685	FRONT GLASS D306x42mm WM20	1 Pc's	
305	8078973	LOCK HOOK	1 Pc's	
306	8081128	SEALING FRONT DOOR WM60	1 Pc's	
307	8801321	KIT SECURING PLATE FRONT GLASS	1 Pc's	
311	8082563-81	COVER PLATE OUTER WM60.C	1 Pc's	
313	8082561	HINGE WM60.C COMPL.	1 Pc's	
313-a	8901097	SCREW MRT-TT 4X10 FZB T20	2 Pc's	
314	8076561-81	GAP SEALING	1 Pc's	
315	8081693	COVER PLATE INNER WM70	1 Pc's	
316	8076563	BALANCE WEIGHT 5,1 KG	2 Pc's	
316-a	8901135	SCREW M6SF-TT 8X25 FZB	4 Pc's	
318	8079873	DOOR LOCK	1 Pc's	
318-a	8902087	SCREW PTK 40X14 WN1452 FZB T20	2 Pc's	
319	8076566	EMERGENCY OPENER DOOR LOCK	1 Pc's	
320	8079959-UL	COVER DOOR LOCK	1 Pc's	
321	8081689	FRONT GABLE CONTAINER WM70	1 Pc's	
322	8081696	SEALING STRIP FRONT GABLE WM70	1 Pc's	
323	8081695-P	TENSIONRING WM70	1 Pc's	
325	8081676-P	DRUM D480 COMPL. WM70	1 Pc's	
326	8081678	DRUM PADDLE WM70	3 Pc's	
327	8081649	DRIVE BELT J5 1225	1 Pc's	
329	8801276	KIT SEALING CASSETTE	1 Pc's	
330	8056314	BALL BEARING 6206 2RS MTSRL	2 Pc's	
331	8801456	CONTAINER COMPL. WM70 2 EL.	1 Pc's	
332	8056810	SCALE WASHER 37x30,5x0,5	1 Pc's	
333	8056376	PULLEY COMPL. D292	1 Pc's	
335	8901052	SCREW BUFO 8,8 10X25 GALV	1 Pc's	
339	8083250-81	COVER HINGE WM60.C	1 Pc's	
342	8089887	GUIDE-2 GLASS DOOR	1 Pc's	

info@zipnasklade.ru
8(800)500-69-51

pump (400 V) BE

Control panel

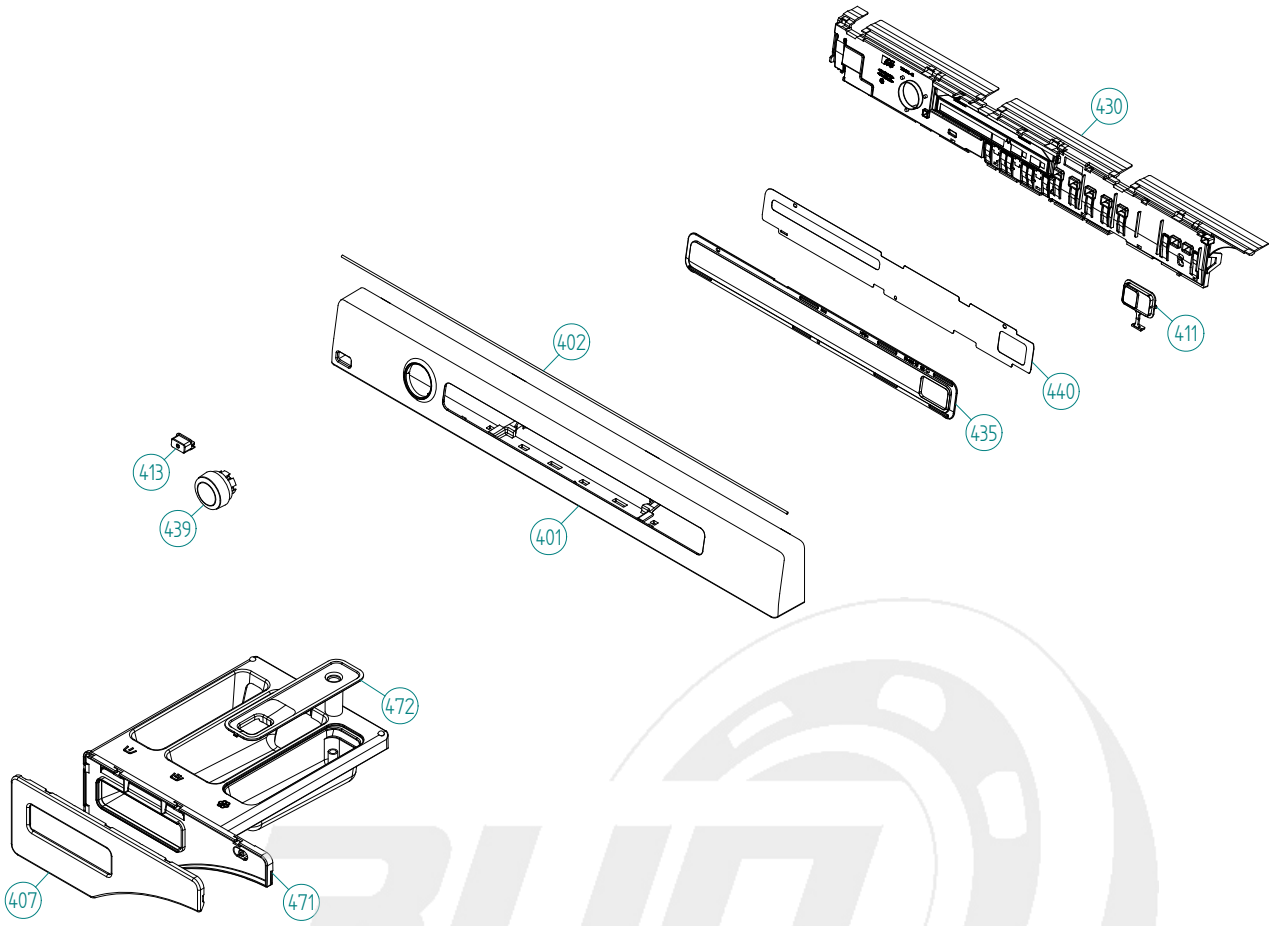

info@zipnasklade.ru
8(800)500-69-51

pump (400 V) BE - Titanium FI (WM70.C)

Pos	Spare Part No.	Description	Qty	Comment
401	8080887-69	PANEL WMD60.2 MECH.	1 Pc's	
402	8079749	O-RING CORD CELLULAR RUBBER	1 Pc's	
407	8081672-81	LID DETERGENT DISP. W. HOLE	1 Pc's	
411	8081748-69	PUSHBUT. START/STOP PRINTED WM	1 Pc's	
413	8081710-69	PUSHBUTTON MAIN SWITCH WMD60.2	1 Pc's	
430	8088612	CONTROL UNIT WM70.C	1 Pc's	
435	8083316	LENS 0-OPTIONS WMD60.2	1 Pc's	
439	8083075-69	KNOB OEM WMD60.2	1 Pc's	
440	8083375-81	DECOR PLATE 0-OPTIONS WMD60.C	1 Pc's	
468	8076209	GROUND CHAIN WM UL4	1 Pc's	
469	8086440	CABLE SET COIN BOX	1 Pc's	
469	8083064	CABLE SET COIN OP. WMD60.C	1 Pc's	
471	8081664	DETERGENT COMPARTMENT	1 Pc's	
472	8081665	SIPHON DETERGENT COMPARTMENT	1 Pc's	

info@zipnasklade.ru
8(800)500-69-51

WIRES IN ALL MACHINES
WIRES IN SOME MACHINES
INTERNAL CONNECTION

CABLE POSITIONS
1: MOTOR COMMUNICATION
2: THERMISTOR
3: INLET VALVES
4: DOOR LOCK, DRAIN PUMP, PREASSURE SWITCH
6: COMMUNICATION INTERFACE
7: COIN COLLECTOR
8: POWER
9: HEATING ELEMENT, PREASSURE SWITCH
10: MOTOR POWER

RESISTANCES AT ROOM TEMPERATURE (CA. 20°C/68°F)
VALUES WITHIN +/-10% ARE REGARDED AS NORMAL COMPONENT

F: RADIO INTERFERENCE SUPPRESSION FILTER	680K Ohm
EL: HEATING ELEMENT	25 Ohm
AP: DRAIN PUMP 50 Hz	144 Ohm
AP: DRAIN PUMP 60 Hz	76 Ohm
AV: DRAIN VALVE	110/134 Ohm
LL: DOOR LOCK, 1-2	122 Ohm
NTC: THERMISTOR	6.1 - 3.8 K Ohm
IV 1: INLET VALVE 1	3.7 K Ohm
IV 2: INLET VALVE 2	3.7 K Ohm
IV3: INLET VLAVE 3	3.5 K Ohm
MO: MOTOR, 1-3	4,3±7% Ohm
1-2	4,3±7% Ohm
2-3	4,3±7% Ohm

MCU: MOTOR CONTROL UNIT
N: PRESSURE SWITCH
TS: PRESSURE SENSOR
TG: TACHO GENERATOR
BA: CONTAINER
INKB: INCOMING GROUND
CI: COMMUNICATIONS INTERFACE

USER SETTINGS MENU
TURN OFF POWER (S1)
WAIT FOR AT LEAST 5 SEC
HOLD S5
TURN ON POWER (S1)
PRESS S5 5 TIMES TO ENTER MENU

SERVICE MENU
TURN OFF POWER (S1)
WAIT FOR AT LEAST 5 SEC
HOLD S4
TURN ON POWER (S1)
PRESS S4 5 TIMES TO ENTER SERVICE MENU

PRESS DOOR OPENING (S5) TO CHANGE MENU STEP
ROTATE DIAL TO CHANGE IN STEP
PRESSING START/STOP (S4) STORES AND EXITS SERVICE MENU

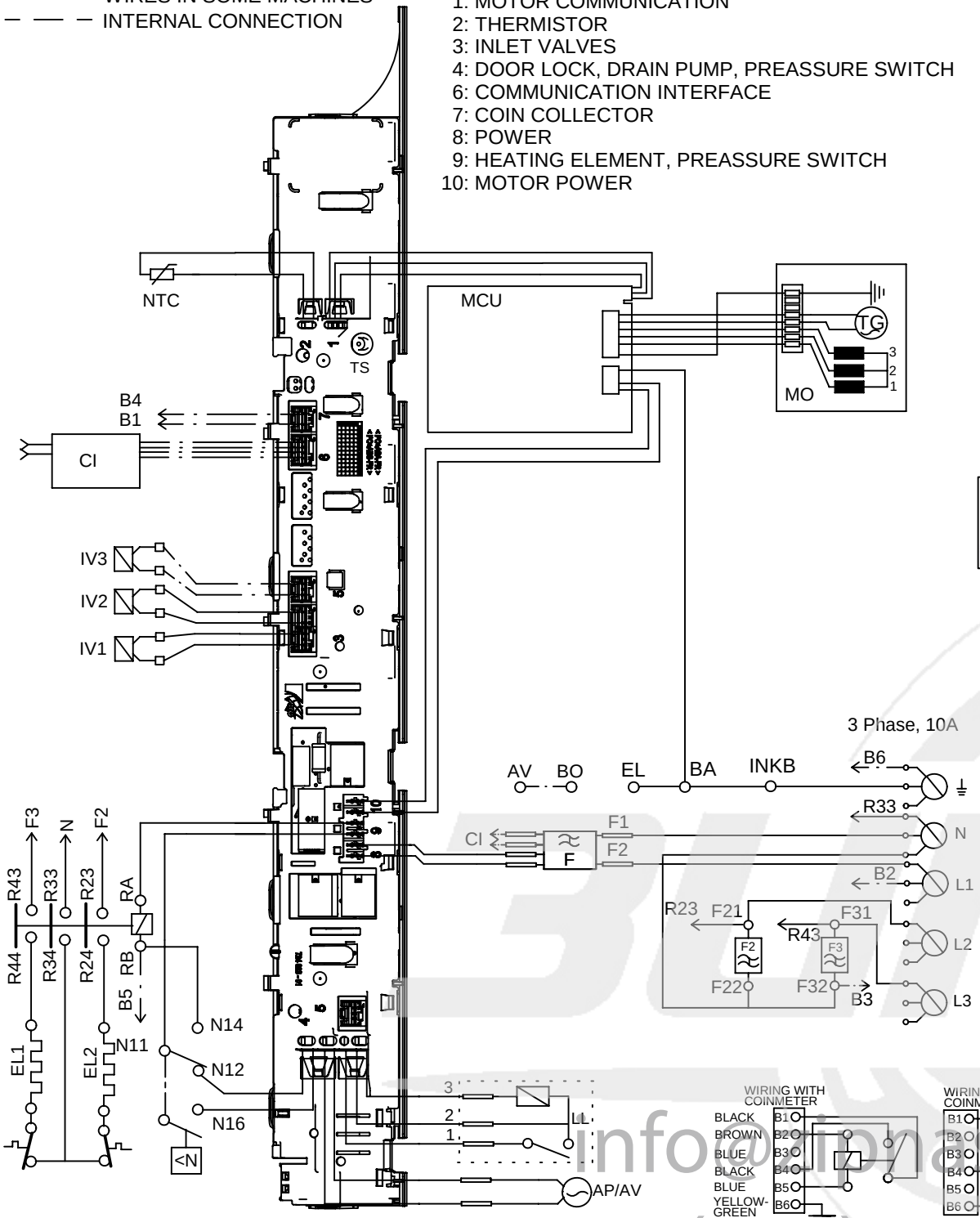

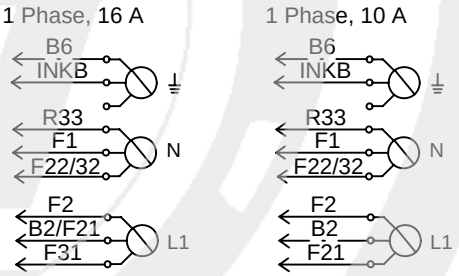

2009-12-17

CIRCUIT DIAGRAM WM70.C

80 886 19 - 00

info@ipasklade.ru
8(800)500 60 51